Cinterion® PLS83-W

Hardware Interface Overview

Version: 00.860
DocId: PLS83-W_HIO_v00.860

Document Name:	**Cinterion® PLS83-W Hardware Interface Overview**
Version:	**00.860**
Date:	**2021-02-18**
DocId:	**PLS83-W_HIO_v00.860**
Status	**Confidential / Preliminary**

GENERAL NOTE
THE USE OF THE PRODUCT INCLUDING THE SOFTWARE AND DOCUMENTATION (THE "PRODUCT") IS SUBJECT TO THE RELEASE NOTE PROVIDED TOGETHER WITH PRODUCT. IN ANY EVENT THE PROVISIONS OF THE RELEASE NOTE SHALL PREVAIL. THIS DOCUMENT CONTAINS INFORMATION ON THALES DIS AIS DEUTSCHLAND GMBH (“THALES”) PRODUCTS. THE SPECIFICATIONS IN THIS DOCUMENT ARE SUBJECT TO CHANGE AT THALES'S DISCRETION. THALES GRANTS A NON-EXCLUSIVE RIGHT TO USE THE PRODUCT. THE RECIPIENT SHALL NOT TRANSFER, COPY, MODIFY, TRANSLATE, REVERSE ENGINEER, CREATE DERIVATIVE WORKS; DISASSEMBLE OR DECOMPILE THE PRODUCT OR OTHERWISE USE THE PRODUCT EXCEPT AS SPECIFICALLY AUTHORIZED. THE PRODUCT AND THIS DOCUMENT ARE PROVIDED ON AN "AS IS" BASIS ONLY AND MAY CONTAIN DEFICIENCIES OR INADEQUACIES. TO THE MAXIMUM EXTENT PERMITTED BY APPLICABLE LAW, THALES DISCLAIMS ALL WARRANTIES AND LIABILITIES. THE RECIPIENT UNDERTAKES FOR AN UNLIMITED PERIOD OF TIME TO OBSERVE SECRECY REGARDING ANY INFORMATION AND DATA PROVIDED TO HIM IN THE CONTEXT OF THE DELIVERY OF THE PRODUCT. THIS GENERAL NOTE SHALL BE GOVERNED AND CONSTRUED ACCORDING TO GERMAN LAW.

Copyright
Transmittal, reproduction, dissemination and/or editing of this document as well as utilization of its contents and communication thereof to others without express authorization are prohibited. Offenders will be held liable for payment of damages. All rights created by patent grant or registration of a utility model or design patent are reserved.

Copyright © 2021, THALES DIS AIS Deutschland GmbH

Trademark Notice
Thales, the Thales logo, are trademarks and service marks of Thales and are registered in certain countries. Microsoft and Windows are either registered trademarks or trademarks of Microsoft Corporation in the United States and/or other countries. All other registered trademarks or trademarks mentioned in this document are property of their respective owners.

Contents

1 Introduction ... 7
1.1 Product Variants ... 7
1.2 Key Features at a Glance ... 7
1.3 PLS83-W System Overview ... 11

2 Interface Characteristics ... 12
2.1 Application Interface ... 12
2.1.1 USB Interface ... 12
2.1.2 Serial Interface ASC0 ... 13
2.1.3 Serial Interface ASC1 ... 14
2.1.4 UICC/SIM/USIM Interface ... 15
2.1.4.1 SIM_SWITCH Line ... 17
2.1.5 GPIO Interface ... 18
2.1.6 Digital Audio Interface ... 18
2.1.6.1 Pulse Code Modulation Interface ... 18
2.1.6.2 Inter-IC Sound Interface (TBD) ... 19
2.1.7 Control Signals ... 20
2.1.7.1 Status LED ... 20
2.1.7.2 Power Indication ... 21
2.2 RF Antenna Interface ... 22
2.2.1 Antenna Installation ... 23
2.2.2 RF Line Routing Design ... 24
2.2.2.1 Line Arrangement Examples ... 24
2.2.2.2 Routing Example ... 29
2.3 GNSS Antenna Interface ... 30
2.3.1 GNSS Antenna Diagnostic ... 31

3 Operating Characteristics ... 32
3.1 Power Supply ... 32

4 Mechanical Dimensions, Mounting and Packaging ... 33
4.1 Mechanical Dimensions of PLS83-W ... 33

5 Regulatory and Type Approval Information ... 37
5.1 Directives and Standards ... 37
5.2 SAR requirements specific to portable mobiles ... 40
5.3 Reference Equipment for Type Approval ... 41
5.4 Compliance with FCC/IC/ISED Rules and Regulations ... 42

6 Document Information ... 45
6.1 Revision History ... 45
6.2 Related Documents ... 45
6.3 Terms and Abbreviations ... 45
6.4 Safety Precaution Notes ... 49

7 Appendix 50
7.1 List of Parts and Accessories 50

Tables

Table 1: Signals of the SIM interface (SMT application interface) 15
Table 2: GPIO lines and possible alternative assignment..... 18
Table 3: Overview of PCM pin functions 19
Table 4: Overview of I²S pin functions 20
Table 5: Return loss in the active band..... 22
Table 6: Sample ranges of the GNSS antenna diagnostic measurements and their possible meaning 31
Table 7: Directives 37
Table 8: Standards of North American type approval 37
Table 9: Standards of European type approval..... 37
Table 10: Requirements of quality 38
Table 11: Standards of the Ministry of Information Industry of the People's Republic of China 38
Table 12: Toxic or hazardous substances or elements with defined concentration limits 39
Table 13: Antenna gain limits for FCC and ISED..... 42
Table 14: List of parts and accessories..... 50
Table 15: Molex sales contacts (subject to change) 51

Figures

Figure 1: PLS83-W system overview ... 11
Figure 2: USB circuit ... 12
Figure 3: Serial interface ASC0 ... 13
Figure 4: Serial interface ASC1 ... 14
Figure 5: Module's two UICC/SIM/USIM interfaces ... 16
Figure 6: UICC/SIM/USIM interfaces connected ... 16
Figure 7: External UICC/SIM/USIM switch ... 17
Figure 8: Sample circuit for SIM interface connection via SIM switch ... 17
Figure 9: Status signaling with LED driver ... 20
Figure 10: Power indication signal ... 21
Figure 11: Antenna pads (bottom view) ... 23
Figure 12: Embedded Stripline with 65µm prepreg (1080) and 710µm core ... 24
Figure 13: Micro-Stripline on 1.0mm standard FR4 2-layer PCB - example 1 ... 25
Figure 14: Micro-Stripline on 1.0mm Standard FR4 PCB - example 2 ... 26
Figure 15: Micro-Stripline on 1.5mm Standard FR4 PCB - example 1 ... 27
Figure 16: Micro-Stripline on 1.5mm Standard FR4 PCB - example 2 ... 28
Figure 17: Routing to application's RF connector ... 29
Figure 18: PLS83-W evaluation board layer table ... 29
Figure 19: Supply voltage for active GNSS antenna ... 30
Figure 20: ESD protection for passive GNSS antenna ... 31
Figure 21: Decoupling capacitor(s) for BATT+ ... 32
Figure 22: PLS83-W– top and bottom view ... 34
Figure 23: Dimensions of PLS83-W (all dimensions in mm) ... 35
Figure 24: Dimensions of PLS83-W (keepout area recommended) ... 36
Figure 25: Reference equipment for Type Approval ... 41

1 Introduction

This document[1] describes the hardware of the Cinterion® PLS83-W module. It helps you quickly retrieve interface specifications, electrical and mechanical details and information on the requirements to be considered for integrating further components.

1.1 Product Variants

This document applies to the following Thales module variants:
- Cinterion® PLS83-W Module

1.2 Key Features at a Glance

Feature	Implementation
General	
Frequency bands	PLS83-W integrates all the bands required to have a global coverage across the world (NORAM / LATAM / EMEA /APAC).
GSM class	Small MS
Output power (according to release 99)	Class 4 (+33dBm ±2dB) for GSM850 Class 4 (+33dBm ±2dB) for GSM900 Class 1 (+30dBm ±2dB) for GSM1800 Class 1 (+30dBm ±2dB) for GSM1900 Class E2 (+27dBm ± 3dB) for GSM 850 8-PSK Class E2 (+27dBm ± 3dB) for GSM 900 8-PSK Class E2 (+26dBm +3 /-4dB) for GSM 1800 8-PSK Class E2 (+26dBm +3 /-4dB) for GSM 1900 8-PSK
Output power (according to Release 99)	Class 3 (+24dBm +1/-3dB) for UMTS 850, WCDMA FDD BdXIX Class 3 (+24dBm +1/-3dB) for UMTS 850, WCDMA FDD BdVI Class 3 (+24dBm +1/-3dB) for UMTS 850, WCDMA FDD BdV Class 3 (+24dBm +1/-3dB) for UMTS 900, WCDMA FDD BdVIII Class 3 (+24dBm +1/-3dB) for UMTS 1700, WCDMA FDD BdIII Class 3 (+24dBm +1/-3dB) for UMTS 1900, WCDMA FDD BdII Class 3 (+24dBm +1/-3dB) for UMTS 2100, WCDMA FDD BdIV Class 3 (+24dBm +1/-3dB) for UMTS 2100, WCDMA FDD BdI

1. The document is effective only if listed in the appropriate Release Notes as part of the technical documentation delivered with your Thales product.

Feature	Implementation
Output power (according to Release 8)	Class 3 (+23dBm ±2dB) for LTE 600, LTE FDD Bd71 Class 3 (+23dBm ±2dB) for LTE 700, LTE FDD Bd12 <MFBI Bd17> Class 3 (+23dBm ±2dB) for LTE 700, LTE FDD Bd13 Class 3 (+23dBm ±2dB) for LTE 700, LTE FDD Bd14 Class 3 (+23dBm+2/-2.5dB) for LTE 700, LTE FDD Bd28 Class 3 (+23dBm ±2dB) for LTE 850, LTE FDD Bd26 Class 3 (+23dBm ±2dB) for LTE 850, LTE FDD Bd18 Class 3 (+23dBm ±2dB) for LTE 850, LTE FDD Bd19 Class 3 (+23dBm ±2dB) for LTE 800, LTE FDD Bd20 Class 3 (+23dBm ±2dB) for LTE 850, LTE FDD Bd5 Class 3 (+23dBm ±2dB) for LTE 900, LTE FDD Bd8 Class 3 (+23dBm ±2dB) for LTE 1800, LTE FDD Bd3 Class 3 (+23dBm ±2dB) for LTE 1900, LTE FDD Bd2 Class 3 (+23dBm ±2dB) for LTE 1900, LTE FDD Bd25 Class 3 (+23dBm ±2dB) for LTE 2100, LTE FDD Bd1 Class 3 (+23dBm ±2dB) for LTE 2100, LTE FDD Bd4 Class 3 (+23dBm ±2dB) for LTE 2100, LTE FDD Bd66 Class 3 (+23dBm ±2dB) for LTE 2600, LTE FDD Bd7 Class 3 (+23dBm ±2dB) for LTE 2300, LTE TDD Bd40 Class 3 (+23dBm ±2dB) for LTE 2500, LTE TDD Bd41 Class 3 (+23dBm ±2dB) for LTE 2600, LTE TDD Bd38
Power supply	Normal operation: $3.0V \leq V_{BATT+} \leq 4.5V$ Typ value is 3.8V Extended operation: TBD
Operating temperature (board temperature)	Normal operation: -30°C to +85°C Extended operation: -40°C to -30°C, +85°C to +90°C
Physical	Dimensions: 33mm x 29mm x 2.31mm Weight: approx. 4.8g
RoHS	All hardware components fully compliant with EU RoHS Directive
LTE features	
3GPP Release 10	UE CAT 4 for PLS83 (DL 150Mbps, UL 50Mbps)
HSPA feature	
3GPP Release 7	UE CAT. 14, 6 for PLS83 HSPA+ – DL 21Mbps HSUPA – UL 5.7Mbps Compressed mode (CM) supported according to 3GPP TS25.212
UMTS features	
3GPP Release 4	PS data rate – 384 kbps DL / 384 kbps UL CS data rate – 64 kbps DL / 64 kbps UL

Feature	Implementation
GSM/GPRS/EGPRS features	
Data transfer	GPRS: • Multislot Class 12 • Mobile Station Class B • Coding Scheme 1 – 4 EGPRS: • Multislot Class 12 • EDGE E2 power class for 8 PSK • Downlink coding schemes – CS 1-4, MCS 1-9 • Uplink coding schemes – CS 1-4, MCS 1-9 • SRB loopback and test mode B • 8-bit, 11-bit RACH • 1 phase/2 phase access procedures • Link adaptation and IR • NACC, extended UL TBF • Mobile Station Class B
SMS	Point-to-point MT and MO Cell broadcast Text and PDU mode Storage: SIM card plus SMS locations in mobile equipment
GNSS Features	
Protocol	NMEA
Modes	Standalone GNSS (GPS, GLONASS, Beidou, Galileo)
General	Automatic power saving modes. DC feed bridge and control of power supply for active antenna
Software	
AT commands	Hayes 3GPP TS 27.007, TS 27.005, Thales
SIM Application Toolkit	Default (Network) bearer support for BIP
Firmware update	Generic update from host application over USB modem
Interfaces	
Module interface	Surface mount device with solderable connection pads (SMT application interface). Land grid array (LGA) technology ensures high solder joint reliability and allows the use of an optional module mounting socket. For more information on how to integrate SMT modules see also [4].This application note comprises chapters on module mounting and application layout issues as well as on additional SMT application development equipment.
USB	USB 2.0 High Speed (480Mbit/s) device interface. Full Speed (12Mbit/s) compliant.

Feature	Implementation
2 serial interfaces	ASC0 (in parts shared with GPIO lines): • 8-wire modem interface with status and control lines, unbalanced, asynchronous • Fixed baud rates: 300bps to 921,600bps • Supports RTS0/CTS0 hardware flow control. ASC1 (shared with GPIO lines): • 4-wire, unbalanced asynchronous interface • Fixed baud rates: 300bps to 921,600bps and 3Mbps • Supports RTS1/CTS1 hardware flow control
Audio	1 digital interface (PCM), shared with GPIO lines
2 UICC interfaces (switchable)	Supported chip cards: UICC/SIM/USIM 3V, 1.8V
GPIO interface	22 GPIO lines comprising: 13 lines shared with ASC0, ASC1 lines, with network status indication, fast shutdown and SIM switch 4 GPIO lines shared with PCM interface 9 GPIO lines not shared
I^2C interface	Supports I^2C serial interface.
Digital audio interface	1 digital interface can be configured as PCM or I^2S(TBD).
RING0	Support RING0 to wake up host from power down modes
Antenna interface pads	50Ω. UMTS/GSM/LTE main antenna, UMTS/LTE Rx Diversity antenna, GNSS antenna.
ADC inputs	Analog-to-Digital Converter with unbalanced analog inputs, for example, for the (external) antenna diagnosis
Power on/off, Reset	
Power on/off	Switch on by hardware signal IGT Switch off by AT command Switch off by hardware signal FST_SHDN instead of AT command Automatic switch off in case of critical temperature or voltage conditions
Reset	Orderly reset by AT command Reset by emergency reset signal EMERG_RST.
Special features	
Real time clock	Timer functions via AT commands.
Evaluation kit	
LGA DevKit	LGA DevKit designed to test Thales LGA modules.
Evaluation module	PLS83-W module soldered onto a dedicated PCB that can be connected to an adapter in order to be mounted onto the DSB75 or DSB mini.
DSB-mini	DSB-mini Development Support Board designed to test and type approve. It is the cost optimized development board alternative to DSB75.
DSB75	DSB75 Development Support Board designed to test and type approve Thales modules and provide a sample configuration for application engineering. A special adapter is required to connect the PLS83-W evaluation module to the DSB75.

1.3 PLS83-W System Overview

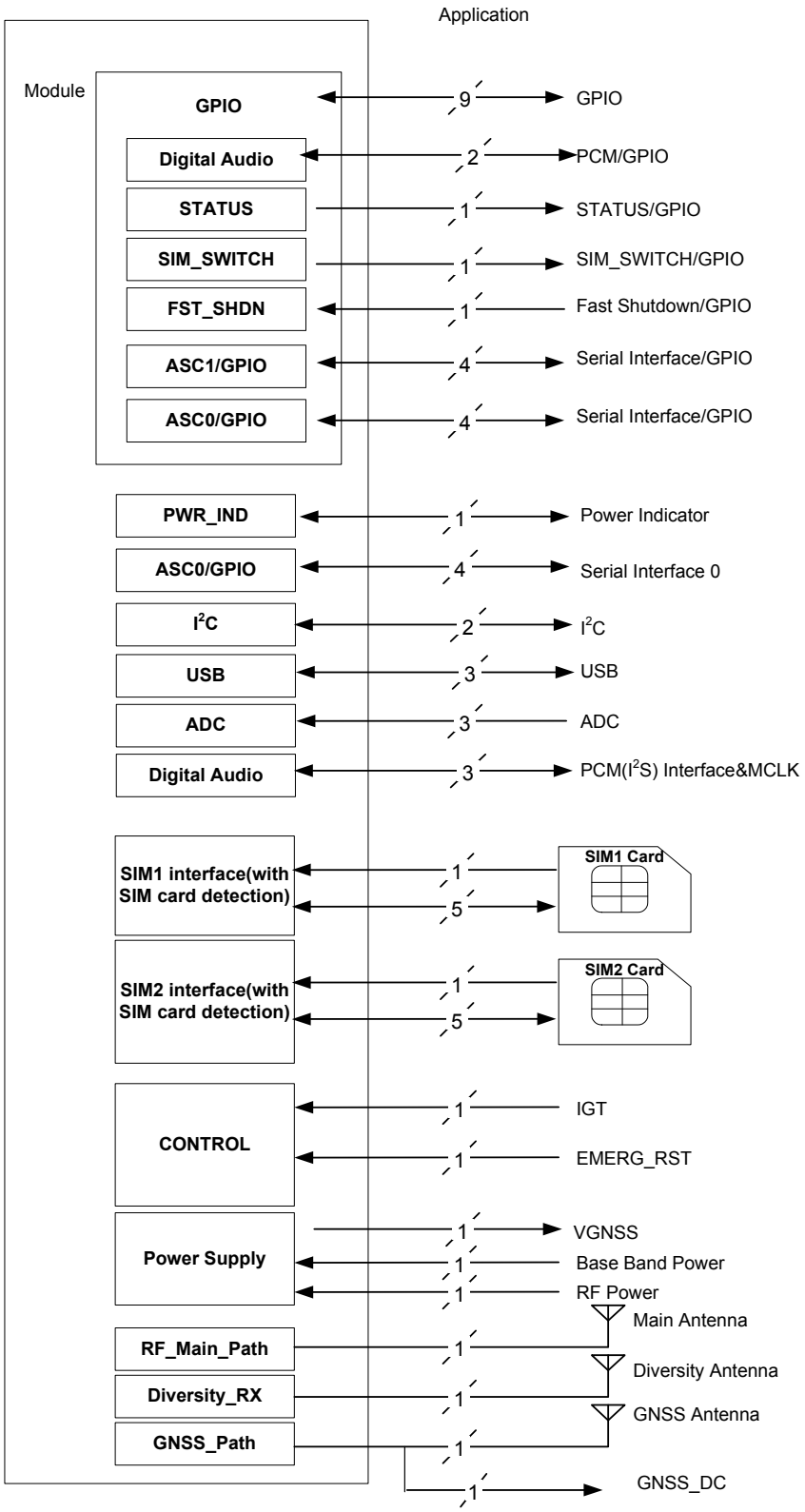

Figure 1: PLS83-W system overview

2 Interface Characteristics

PLS83-W is equipped with an SMT application interface that connects to the external application. The SMT application interface incorporates the various application interfaces as well as the RF antenna interface.

2.1 Application Interface

2.1.1 USB Interface

PLS83-W supports a USB 2.0 High Speed (480Mbit/s) device interface that is Full Speed (12Mbit/s) compliant. The USB I/O pins are capable of driving the signal at min 3.0V. The impedances, serial and pull up resistors are implemented according to “Universal Serial Bus Specification Revision 2.0”[1], No further additional components are required.

The external application is responsible for supplying the VUSB_IN line. This line is used for cable detection only. The USB part (driver and transceiver) is supplied by means of BATT+. This is because PLS83-W is designed as a self-powered device compliant with the “Universal Serial Bus Specification Revision 2.0”.

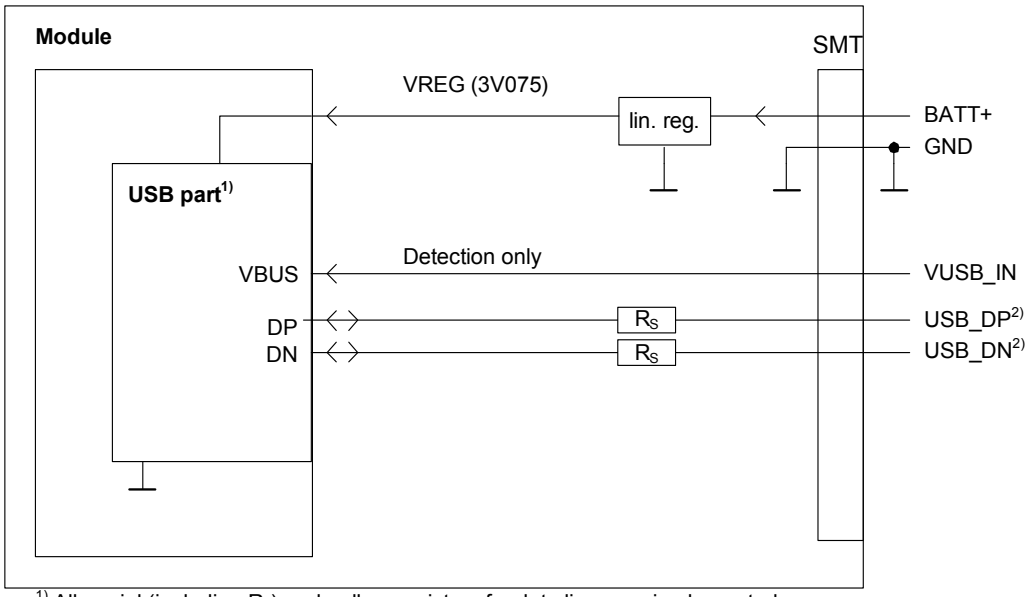

1) All serial (including R_S) and pull-up resistors for data lines are implemented.
2) If the USB interface is operated in High Speed mode (480MHz), it is recommended to take special care routing the data lines USB_DP and USB_DN. Application layout should in this case implement a differential impedance of 90 ohms for proper signal integrity.

Figure 2: USB circuit

To properly connect the module's USB interface to the external application, a USB 2.0 compatible connector and cable or hardware design is required. For more information on the USB related signals see Table 3. Furthermore, the USB modem driver distributed with PLS83-W needs to be installed.

1. The specification is ready for download on http://www.usb.org/developers/docs/

While a USB connection is active, the module will never switch to SLEEP mode. Only if the USB interface is in Suspend mode, the module is able to switch to SLEEP mode.

2.1.2 Serial Interface ASC0

PLS83-W offers an 8-wire unbalanced, asynchronous modem interface ASC0 conforming to ITU-T V.24 protocol DCE signaling. The electrical characteristics do not comply with ITU-T V.28. The significant levels are 0V (for low data bit or active state) and 1.8V (for high data bit or inactive state). For electrical characteristics please refer to Table 3.

PLS83-W is designed for use as a DCE. Based on the conventions for DCE-DTE connections it communicates with the customer application (DTE) using the following signals:
- Port TXD @ application sends data to the module's TXD0 signal line
- Port RXD @ application receives data from the module's RXD0 signal line

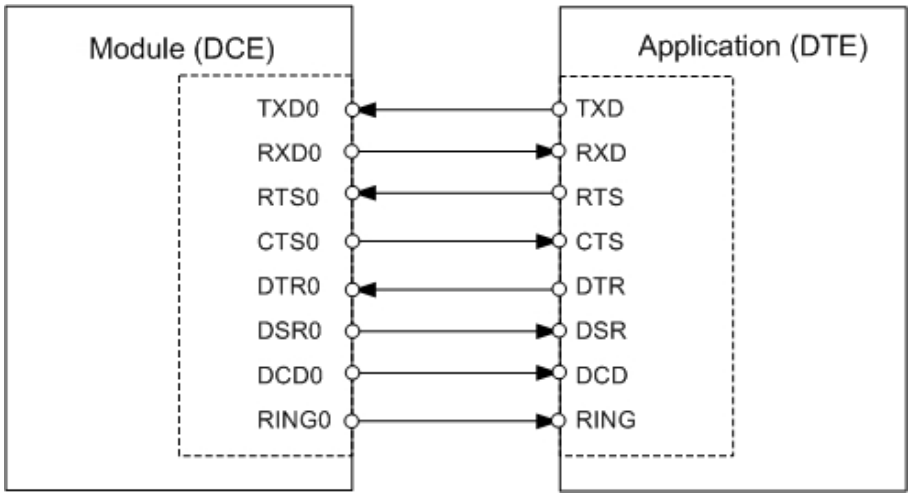

Figure 3: Serial interface ASC0

Features:
- Includes the data lines TXD0 and RXD0, the status lines RTS0 and CTS0 and, in addition, the modem control lines DTR0, DSR0, DCD0 and RING0.
- The RING0 signal serves to indicate incoming calls and other types of URCs (Unsolicited Result Code). It can also be used to send pulses to the host application, for example to wake up the application from power saving state.
- Configured for 8 data bits, no parity and 1 stop bit.
- ASC0 can be operated at fixed bit rates from 300bps up to 921600bps.
- Supports RTS0/CTS0 hardware flow control. The hardware hand shake line RTS0 has an internal pull down resistor causing a low level signal, if the line is not used and open. Although hardware flow control is recommended, this allows communication by using only RXD and TXD lines.

Note: The ASC0 modem control lines DTR0, DCD0, DSR0 and RING0 can also be configured as GPIO lines. If configured as GPIO lines, these GPIO lines are assigned as follows:

GPIO1-->DTR0
GPIO2-->DCD0
GPIO3-->DSR0
GPIO24-->RING0

Configuration is done by AT command (see [1]). The configuration is non-volatile and becomes active after a module restart.
Notes: No data must be sent over the ASC0 interface before the interface is active and ready to receive data (see Section 3.1.1).

2.1.3 Serial Interface ASC1

Four PLS83-W GPIO lines can be configured as ASC1 interface signals to provide a 4-wire unbalanced, asynchronous modem interface ASC1 conforming to ITU-T V.24 protocol DCE signalling. The electrical characteristics do not comply with ITU-T V.28. The significant levels are 0V (for low data bit or active state) and 1.8V (for high data bit or inactive state). For electrical characteristics please refer to Table 3.

PLS83-W is designed for use as a DCE. Based on the conventions for DCE-DTE connections it communicates with the customer application (DTE) using the following signals:
- Port TXD @ application sends data to module's TXD1 signal line
- Port RXD @ application receives data from the module's RXD1 signal line

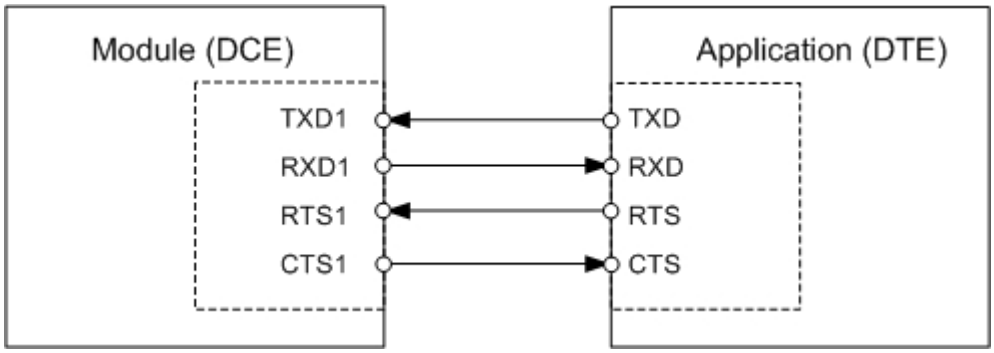

Figure 4: Serial interface ASC1

Features
- Includes only the data lines TXD1 and RXD1 plus RTS1 and CTS1 for hardware handshake.
- On ASC1 no RING line is available.
- Configured for 8 data bits, no parity and 1 or 2 stop bits.
- ASC1 can be operated at fixed bit rates from 300 bps to 921,600bps and 3Mbps
- Supports RTS1/CTS1 hardware flow. The hardware hand shake line RTS0 has an internal pull down resistor causing a low level signal, if the line is not used and open. Although hardware flow control is recommended, this allows communication by using only RXD and TXD lines.

Notes: The ASC1 interface lines are originally available as GPIO lines. If configured as ASC1 lines, the GPIO lines are assigned as follows:

GPIO16-->RXD1
GPIO17-->TXD1
GPIO18-->RTS1
GPIO19-->CTS1

Configuration is done by AT command (see [1]). The configuration is non-volatile and becomes active after a module restart.

2.1.4 UICC/SIM/USIM Interface

PLS83-W has two UICC/SIM/USIM interfaces (includes eSIM interface) compatible with the 3GPP 31.102 and ETSI 102 221. These are wired to the host interface in order to be connected to an external SIM card holder. Five pads on the SMT application interface are reserved for each of the two SIM interfaces.

The UICC/SIM/USIM interface supports 3V and 1.8V SIM cards. Please refer to Table 1 for electrical specifications of the UICC/SIM/USIM interface lines depending on whether a 3V or 1.8V SIM card is used.

The CCINx signal serves to detect whether a tray (with SIM card) is present in the card holder. Using the CCINx signal is mandatory for compliance with the GSM 11.11 recommendation if the mechanical design of the host application allows the user to remove the SIM card during operation.

Table 1: Signals of the SIM interface (SMT application interface)

Signal	Description
GND	Ground connection for SIM interfaces. Optionally a separate SIM ground line using e.g., pad N11, may be used to improve EMC.
CCCLK1 CCCLK2	Chipcard clock lines for 1st and 2nd SIM interface.
CCVCC1 CCVCC2	SIM supply voltage lines for 1st and 2nd SIM interface.
CCIO1 CCIO2	Serial data lines for 1st and 2nd SIM interface, input and output.
CCRST1 CCRST2	Chipcard reset lines for 1st and 2nd SIM interface.
CCIN1 CCIN2	Input on the baseband processor for detecting a SIM card tray in the holder. If the SIM is removed during operation the SIM interface is shut down immediately to prevent destruction of the SIM. The CCINx signal is active low. The CCINx signal is mandatory for applications that allow the user to remove the SIM card during operation. The CCINx signal is solely intended for use with a SIM card. It must not be used for any other purposes. Failure to comply with this requirement may invalidate the type approval of PLS83-W.

Note: No guarantee can be given, nor any liability accepted, if loss of data is encountered after removing the SIM card during operation. Also, no guarantee can be given for properly initializing any SIM card that the user inserts after having removed the SIM card during operation. In this case, the application must restart PLS83-W.

By default, only the module's 1st SIM interface is available and can be used. The usage of the module's 2nd SIM interface has to be configured by AT command.

As an alternative to connecting the module's two SIM interfaces and switching between these via AT command, it is possible to connect the first of the module's SIM interfaces via an external SIM switch that in turn provides access to a further SIM interface. For details see Section 2.1.4.1.

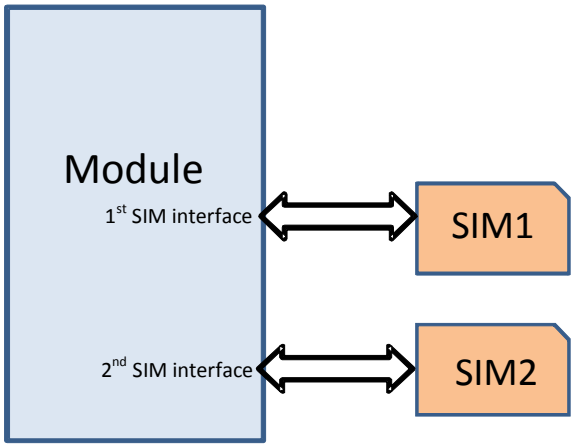

Figure 5: Module's two UICC/SIM/USIM interfaces

.

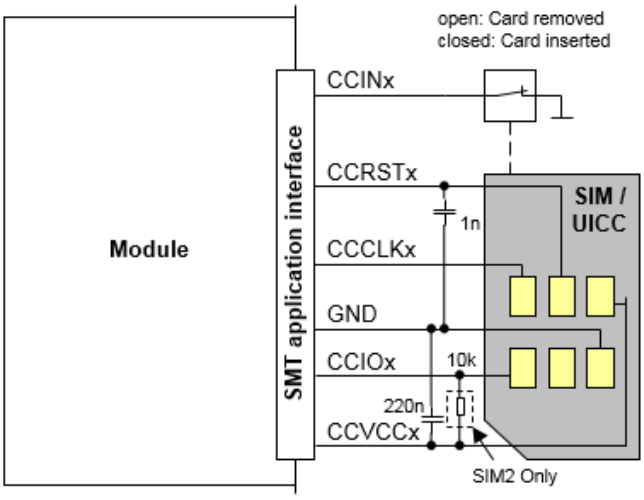

Figure 6: UICC/SIM/USIM interfaces connected

The total cable length between the SMT application interface pads on PLS83-W and the pads of the external SIM card holder must not exceed 100mm in order to meet the specifications of 3GPP TS 51.010-1 and to satisfy the requirements of EMC compliance.

To avoid possible cross-talk from the CCCLKx signal to the CCIOx signal be careful that both lines are not placed closely next to each other. A useful approach is using the GND line to shield the CCIOx line from the CCCLKx line.

2.1.4.1 SIM_SWITCH Line

As an alternative to connecting the module's two SIM interfaces and switching between these interfaces by means of AT command, it is possible to connect the first of the module's SIM interfaces via an external SIM switch that in turn provides access to a further SIM interface.

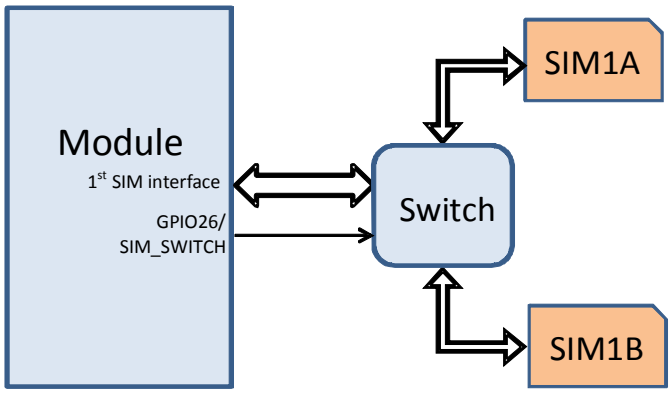

Figure 7: External UICC/SIM/USIM switch

The module's GPIO26 line can in this case be configured as SIM_SWITCH line in order to control the external SIM switch as shown in the sample circuit in Figure 8. A low state would then indicate the usage of the first SIM interface (SIM1A), a high state would indicate the usage of the second interface (SIM1B).

The configuration of the SIM_SWITCH (GPIO26) line is done via AT command, is non-volatile, and available after the next module restart.

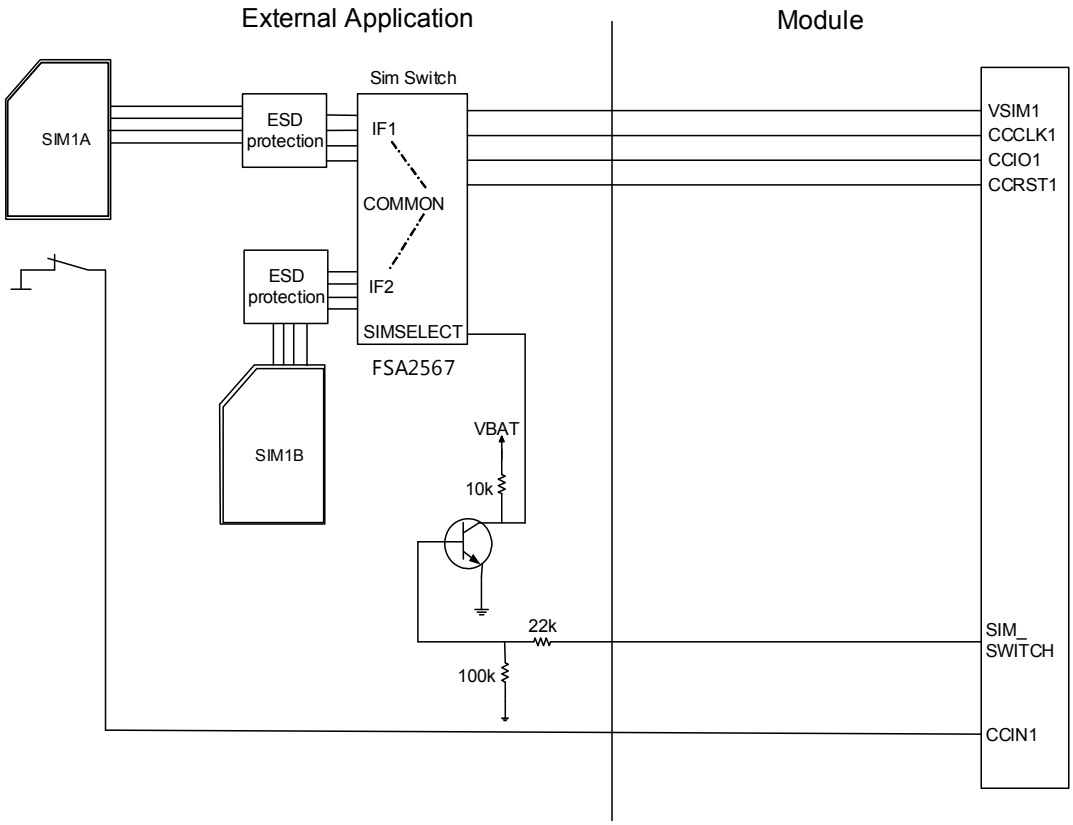

Figure 8: Sample circuit for SIM interface connection via SIM switch

2.1.5 GPIO Interface

The following table shows the configuration variants for the GPIO pads. All variants are mutually exclusive, i.e. a pad configured for instance as Status LED is locked for alternative usage.

Table 2: GPIO lines and possible alternative assignment

GPIO	Fast Shutdown	Status LED	ASC0	ASC1	SIM SWITCH	DAI
GPIO1			DTR0			
GPIO2			DCD0			
GPIO3			DSR0			
GPIO4	FST_SHDN					
GPIO5		Status LED				
GPIO6						
GPIO7						
GPIO8						
GPIO11						
GPIO12						
GPIO13						
GPIO14						
GPIO15						
GPIO16				RXD1		
GPIO17				TXD1		
GPIO18				RTS1		
GPIO19				CTS1		
GPIO20						DOUT
GPIO21						DIN
GPIO24			RING0			
GPIO25						
GPIO26					SIM_SWITCH	

2.1.6 Digital Audio Interface

PLS83-W supports one digital audio interface that can be deployed as PCM. Inter_IC Sound (I^2S) interface is under development.

2.1.6.1 Pulse Code Modulation Interface

PLS83-W's PCM interface can be used to connect audio devices capable of pulse code modulation. The PCM functionality is limited to the use of wideband codec with 16kHz sample rate only. The PCM interface runs at 16kHz sample rate (62.5µs frame length), while the signal processing maintains this rate in a wideband AMR call or samples automatically down

to 8kHz in a narrowband call. Therefore, the PCM sample rate is independent of the audio bandwidth of the call.

The PCM interface has the following characteristics:
- Master mode
- Long frame synchronization
- 16kHz/8kHz sample rate
- 512 kHz bit clock at 16kHz sample rate
- 256 kHz bit clock at 8kHz sample rate

Table 3 lists the available PCM interface signals.

Table 3: Overview of PCM pin functions

Signal name	Signal direction master	Description
DOUT	O	PCM Data from PLS83-W to external codec.
DIN	I	PCM Data from external codec to PLS83-W.
FSC	O	Frame synchronization signal to external codec.
BCLK	O	Bit clock to external codec. Note: If the BCLK2 signal is permanently provided (AT^SAIC parameter <clk_mode> = 0), the module will no longer enter its power save (SLEEP) state.
MCLK	-	Audio master clock. Be synchronous to BCLK to use in external codec. Can be switched on and off.

Note: PCM data is always formatted as 16-bit uncompressed two's complement. Also, all PCM data and frame synchronization signals are written to the PCM bus on the rising clock edge and read on the falling edge.

2.1.6.2 Inter-IC Sound Interface (TBD)

The I^2S Interface is a standardized bidirectio zonal I^2S based digital audio interface for transmission of mono voice signals for telephony services.
The I^2S properties and capabilities comply with the requirements lay out in the Phillips I^2S Bus Specifications, revised June 5, 1996.

The I^2S interface has the following characteristics:
- Bit clock mode: Master
- Sampling rate: 8kHz (narrowband), 16kHz (wideband)
- 256kHz bit clock at 8kHz sample rate
- 512kHz bit clock at 16kHz sample rate

Table 4 lists the available I²S interface signals

Table 4: Overview of I²S pin functions

Signal name on SMT application interface	Signal configuration inactive	Signal direction Master	Description
DOUT	PD	O	I²S data from PLS83-W to external codec
DIN	PD	I	I²S data from external codec to PLS83-W
FSC	PD	O	Frame synchronization signal to/ from external codec Word alignment (WS)
BCLK	PU	O	Bit clock to external codec. BCLK signal low/high time varies between 45% and 55% of its clock period.

2.1.7 Control Signals

2.1.7.1 Status LED

The GPIO5 interface line can be configured to drive a status LED that indicates different operating mode (for GPIOs see 2.1.5). GPIO and LED functionality are mutually exclusive.

To take advantage of this function connect an LED to the GPIO5/STATUS line as shown in Figure 9

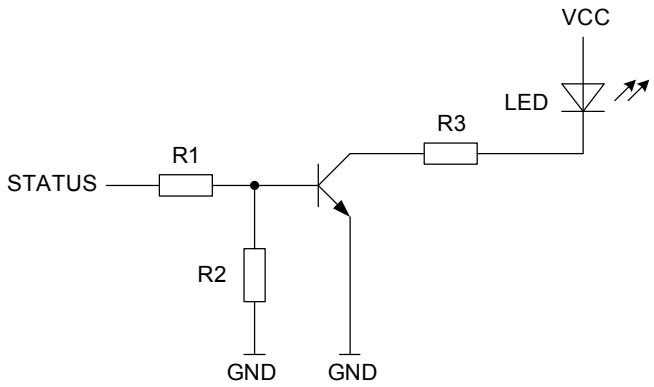

Figure 9: Status signaling with LED driver

2.1.7.2 Power Indication

The power indication signal PWR_IND notifies the on/off state of the module. High state of PWR_IND indicates that the module is switched off. The state of PWR_IND immediately changes to low when IGT is pulled low. For state detection an external pull-up resistor is required.

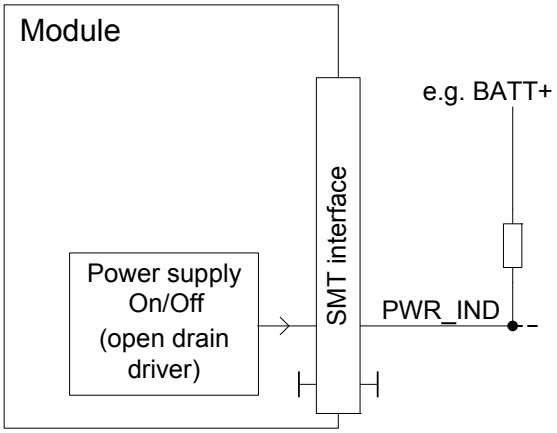

Figure 10: Power indication signal

2.2 RF Antenna Interface

The PLS83-W GSM/UMTS/LTE antenna interface comprises a GSM/UMTS/LTE main antenna as well as a UMTS/LTE Rx diversity antenna to improve signal reliability and quality[1]. The RF interface has an impedance of 50Ω. PLS83-W is capable of sustaining a total mismatch at the antenna line without any damage, even when transmitting at maximum RF power.

The external antenna must be matched properly to achieve best performance regarding radiated power, modulation accuracy and harmonic suppression. Antenna matching networks are not included on the PLS83-W module and should be placed in the host application if the antenna does not have an impedance of 50Ω.

Regarding the return loss PLS83-W provides the following values in the active band:

Table 5: Return loss in the active band

State of module	Return loss of module	Recommended return loss of application
Receive	≥ 8dB	≥ 12dB
Transmit	not applicable	≥ 12dB

1. By delivery default the UMTS/LTE Rx diversity antenna is configured as available for the module since its usage is mandatory for LTE. Please refer to [1] for details on how to configure antenna settings.

2.2.1 Antenna Installation

The antenna is connected by soldering the antenna pads (ANT_MAIN, ANT_DRX and ANT_GNSS) and their neighboring ground pads directly to the application's PCB.

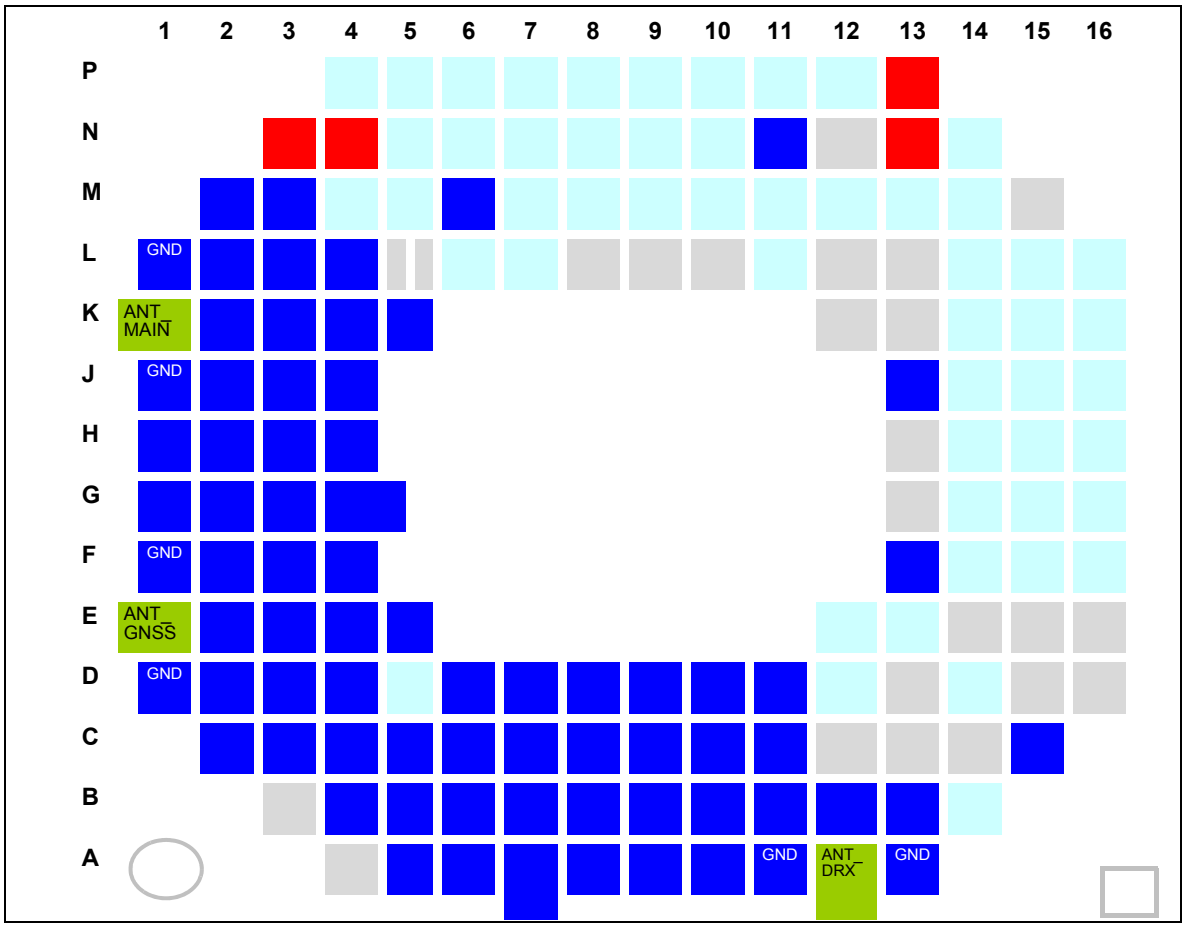

Figure 11: Antenna pads (bottom view)

The distance between the antenna pads and their neighboring GND pads has been optimized for best possible impedance. To prevent mismatch, special attention should be paid to these pads on the application' PCB.

The wiring of the antenna connection, starting from the antenna pad to the application's antenna should result in a 50Ω line impedance. Line width and distance to the GND plane need to be optimized with regard to the PCB's layer stack. Some examples are given in Section 2.2.2.

To prevent receiver desensitization due to interferences generated by fast transients like high speed clocks on the external application PCB, it is recommended to realize the antenna connection line using embedded Stripline rather than Micro-Stripline technology. Please see Section 2.2.2 for examples of how to design the antenna connection in order to achieve the required 50Ω line impedance.

For type approval purposes, the use of a 50Ω coaxial antenna connector (U.FL-R-SMT) might be necessary. In this case the U.FL-R-SMT connector should be placed as close as possible to PLS83-W's antenna pad.

2.2.2 RF Line Routing Design

2.2.2.1 Line Arrangement Examples

Several dedicated tools are available to calculate line arrangements for specific applications and PCB materials - for example from http://www.polarinstruments.com/ (commercial software) or from http:www.awr.com/awr-software/options/tx-line/ (free software).

Embedded Stripline
This figure below shows a line arrangement example for embedded stripline with 65µm FR4 prepreg (type: 1080) and 710µm FR4 core (4-layer PCB).

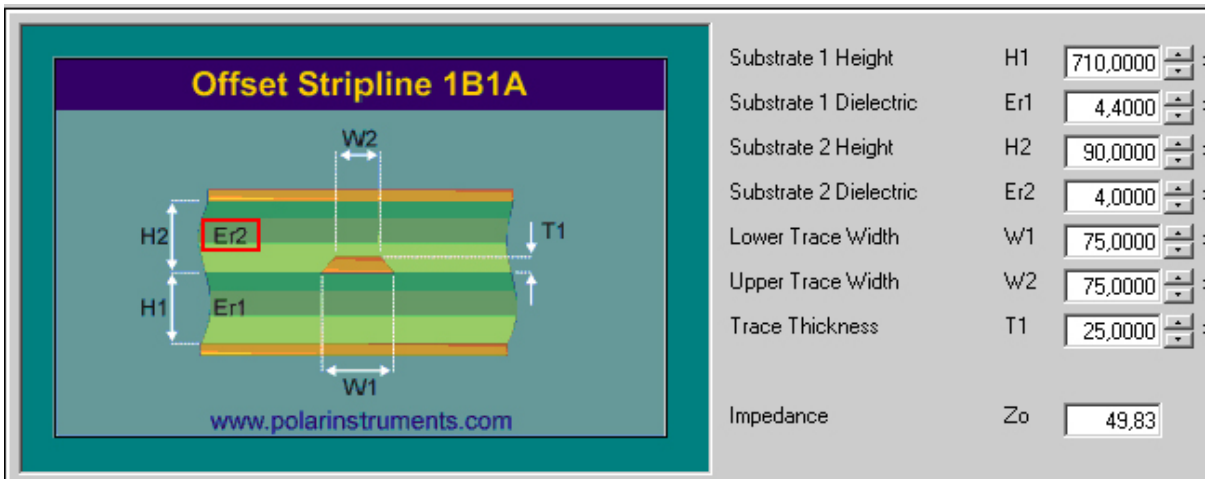

Figure 12: Embedded Stripline with 65µm prepreg (1080) and 710µm core

Micro-Stripline

This section gives two line arrangement examples for micro-stripline.

- Micro-Stripline on 1.0mm Standard FR4 2-Layer PCB
  The following two figures show examples with different values for D1 (ground strip separation).

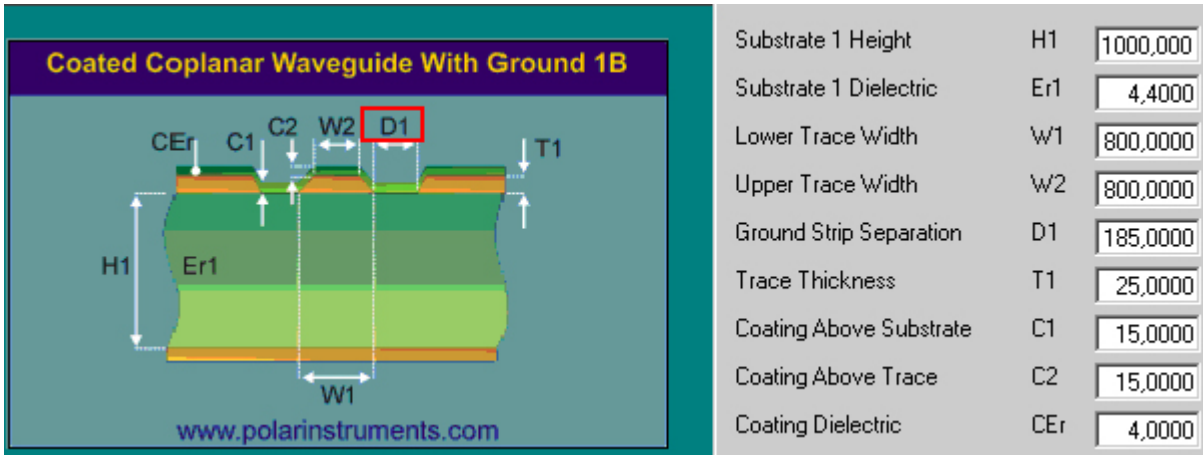

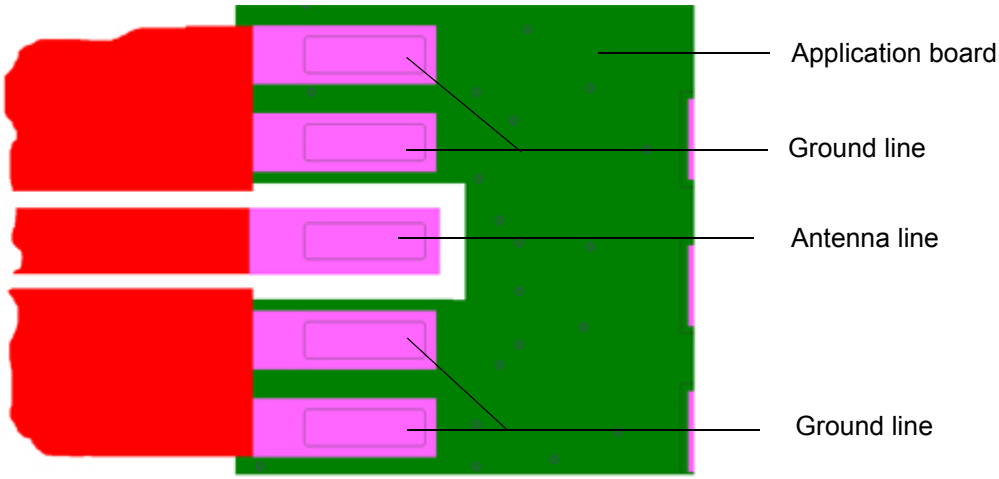

Figure 13: Micro-Stripline on 1.0mm standard FR4 2-layer PCB - example 1

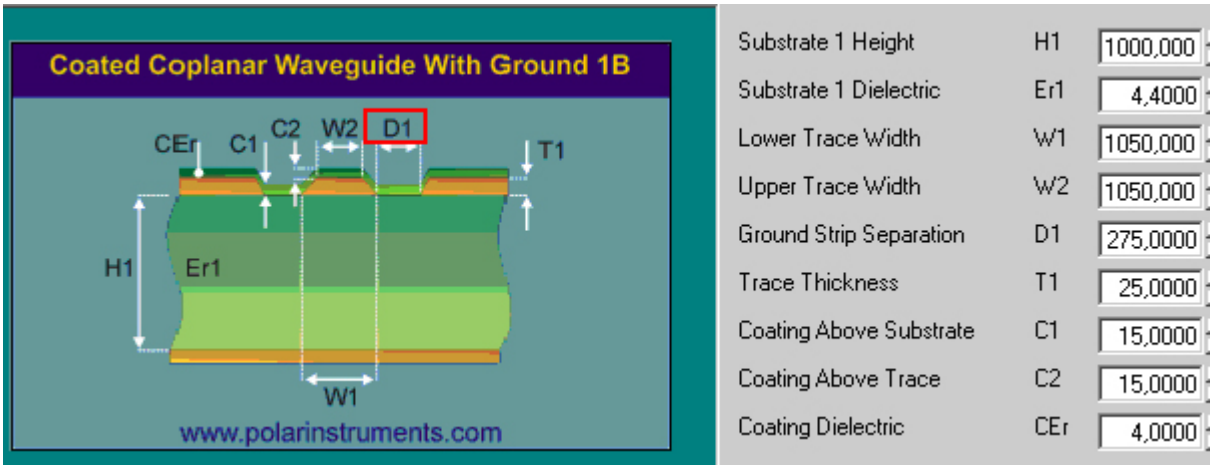

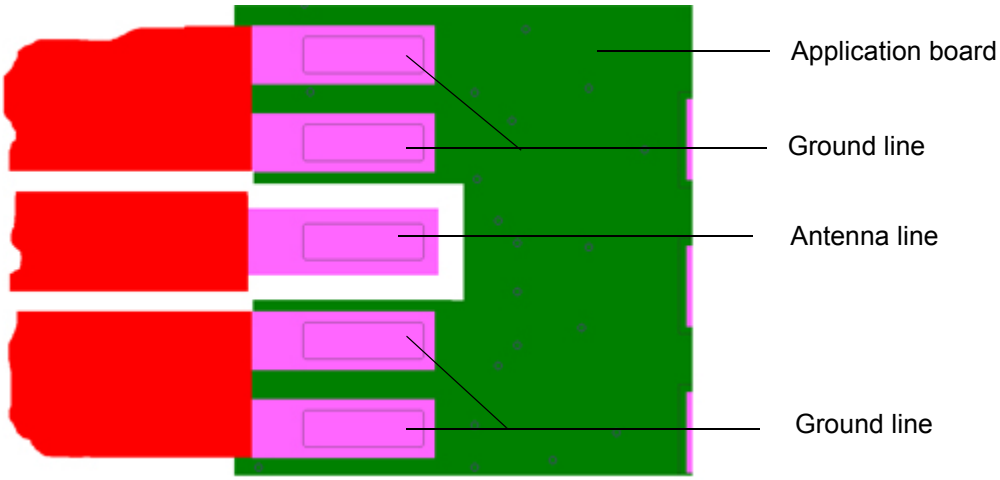

Figure 14: Micro-Stripline on 1.0mm Standard FR4 PCB - example 2

- Micro-Stripline on 1.5mm Standard FR4 2-Layer PCB
  The following two figures show examples with different values for D1 (ground strip separation).

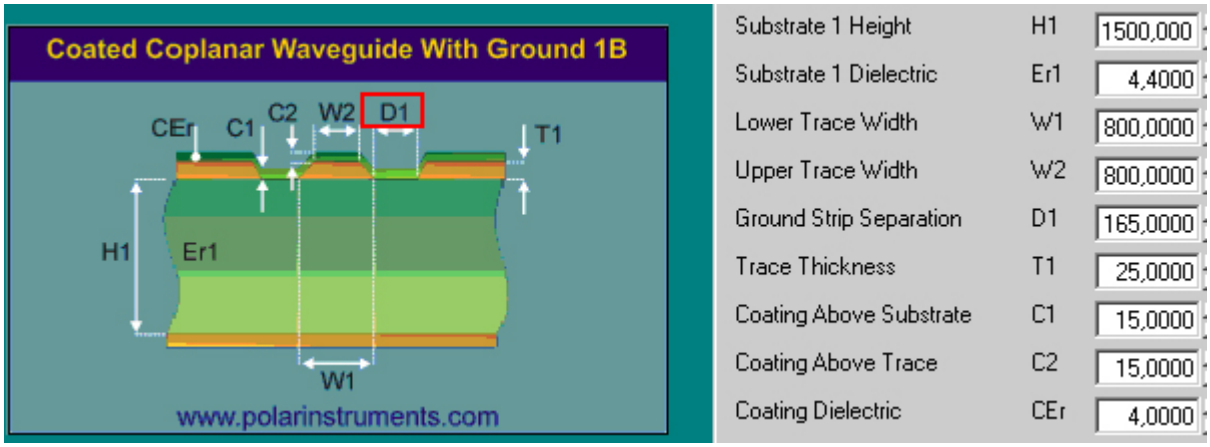

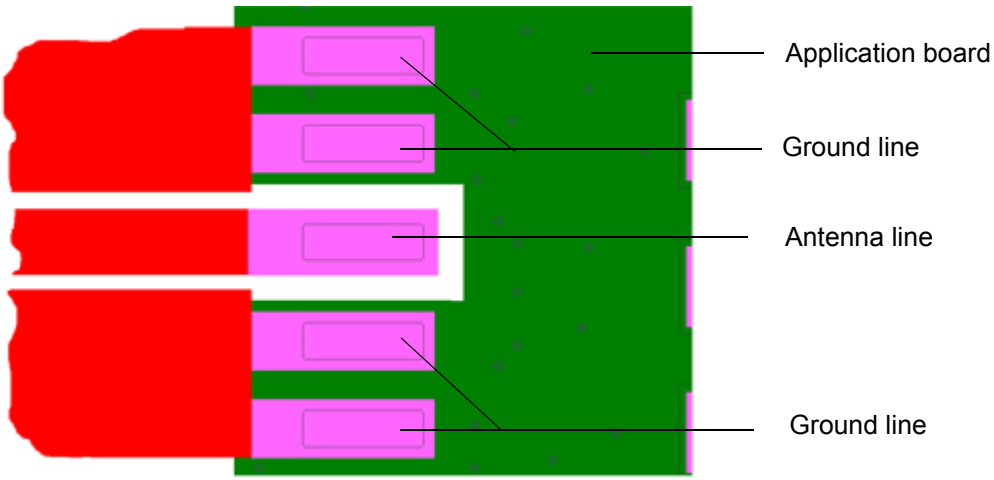

Figure 15: Micro-Stripline on 1.5mm Standard FR4 PCB - example 1

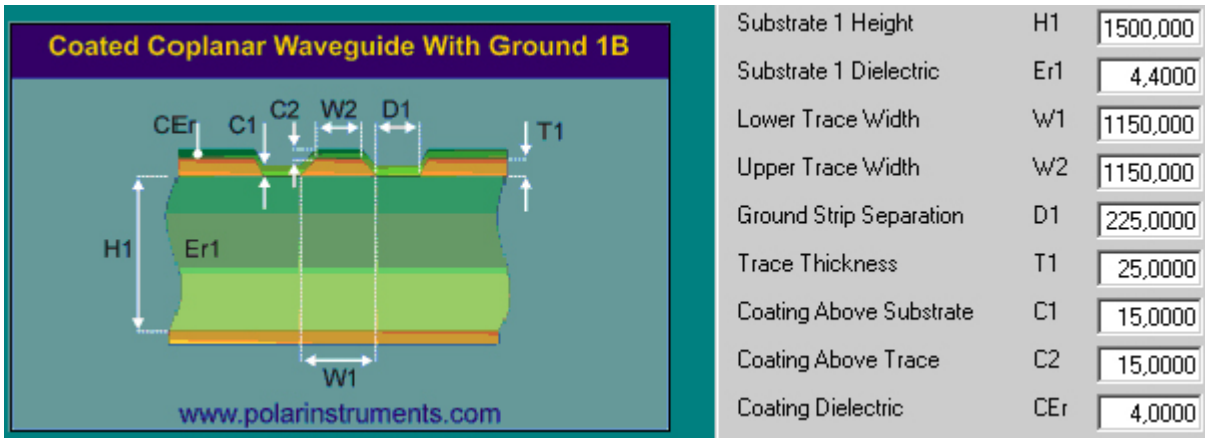

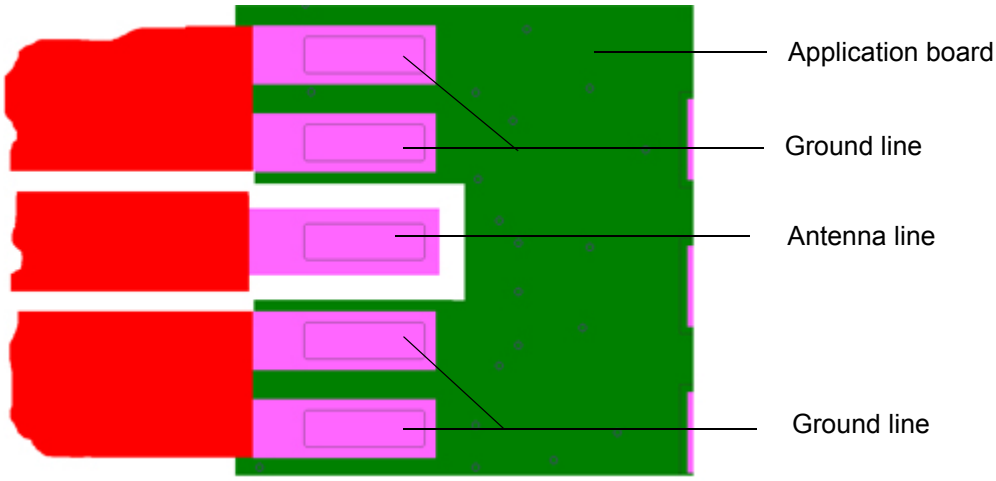

Figure 16: Micro-Stripline on 1.5mm Standard FR4 PCB - example 2

2.2.2.2 Routing Example

Interface to RF Connector

Figure 17 shows a sample connection of a module's antenna pad at the bottom layer of the module PCB with an application PCB's coaxial antenna connector. Line impedance depends on line width, but also on other PCB characteristics like dielectric, height and layer gap. The sample stripline width of 0.33mm is recommended for an application with a PCB layer stack resembling the one of the PLS83-W evaluation board shown in Figure 18. For different layer stacks the stripline width will have to be adapted accordingly.

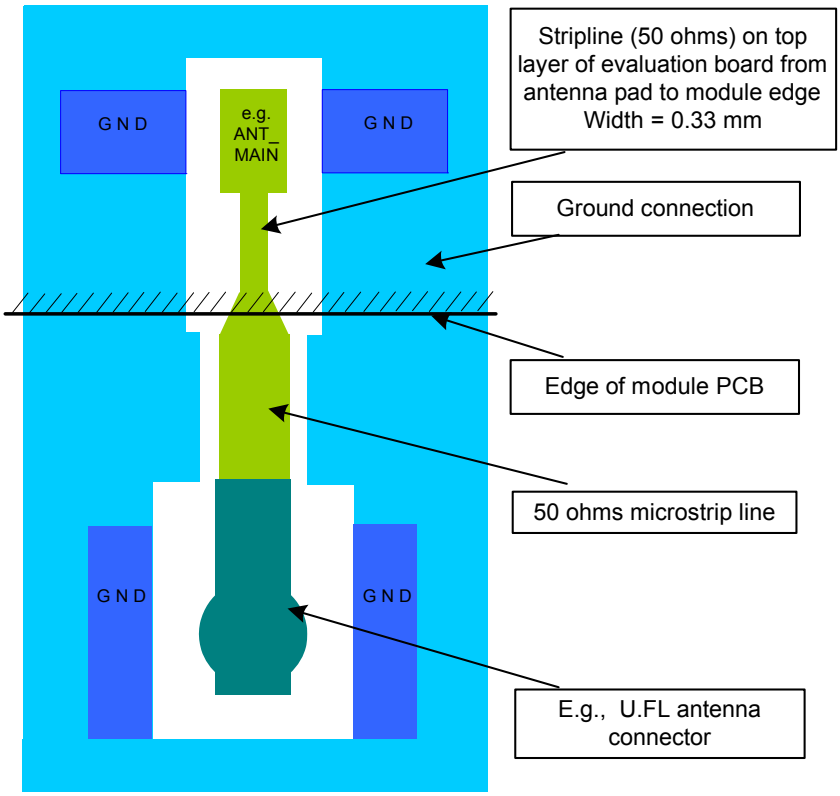

Figure 17: Routing to application's RF connector

Layer No.			Construction	Finished thkness (um)
s/m				15
1				25
			Prepreg :1080X1 RC:64%	65
2				25
			CORE:28mil H/Hoz 7628x4	708
3				25
			Prepreg :1080X1 RC:64%	65
4				25
s/m				15
			Total thickness (including S/M):	**968**

Figure 18: PLS83-W evaluation board layer table

2.3 GNSS Antenna Interface

In addition to the RF antenna interface PLS83-W also has a GNSS antenna interface. The GNSS pad's shape is the same as for the RF antenna interface (see Section 2.2.1).

It is possible to connect active or passive GNSS antennas. In either case they must have 50Ω impedance. The simultaneous operation of GSM/UMTS/LTE and GNSS is implemented.

PLS83-W provides the signal VGNSS to enable an active GNSS antenna power supply. Figure 19 shows the flexibility in realizing the power supply for an active GNSS antenna by giving a sample circuit realizing the supply voltage for an active GNSS antenna.

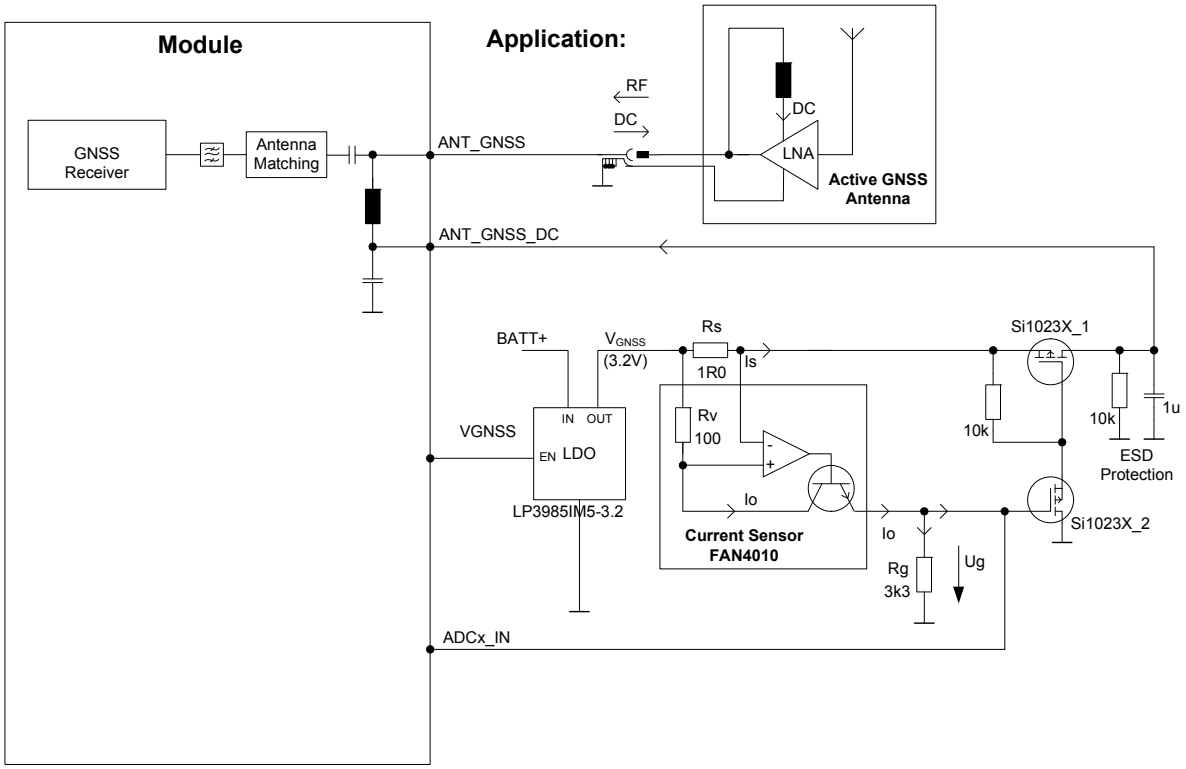

Figure 19: Supply voltage for active GNSS antenna

Figure 20 shows a sample circuit realizing ESD protection for a passive GNSS antenna. Connecting the input ANT_GNSS_DC to GND prevents ESD from coupling into the module.

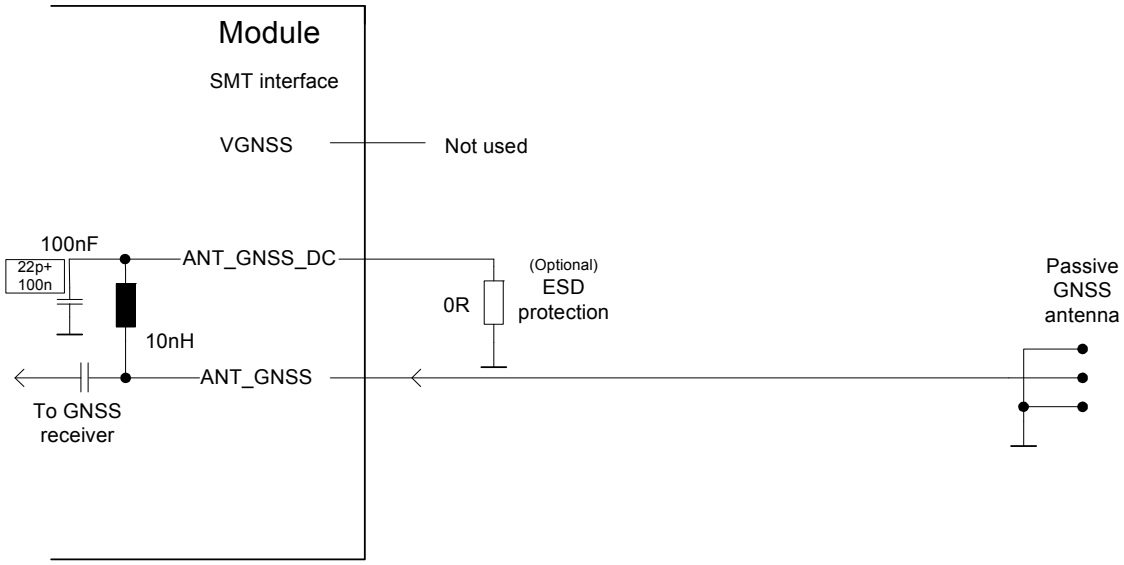

Figure 20: ESD protection for passive GNSS antenna

2.3.1 GNSS Antenna Diagnostic

GNSS antenna diagnosis does require an external detection circuit. The antenna DC supply current can be measured via ADCx_IN. The ADCx_IN input voltage (Ug) may be generated by a sample circuit shown in Figure 19. The circuit allows to check the presence and the connection status of an active GNSS antenna. Passive GNSS antennas cannot be detected. Therefore, GNSS antenna detection is only available in active GNSS antenna mode. This mode is configured by the AT command: AT^SGPSC (for details see [1])

Having enabled the active GNSS antenna mode the presence and connection status of an active GNSS antenna can be checked using the AT command AT^SRADC to monitor ADCx_IN. The following table lists sample current ranges for possible antenna states as well as sample voltage ranges as possible decision thresholds to distinguish between the antenna connection states. Please refer to [1] for more information on the command AT^SRADC.

Table 6: Sample ranges of the GNSS antenna diagnostic measurements and their possible meaning

Antenna connection status	Current ranges (I_S)[1]	Voltage ranges (U_G)
Antenna not connected	<1.4mA	
Decision threshold		59mV ±20%
Antenna connected	2.2mA...20mA	
Decision threshold		825mV ±20%
Antenna short circuited to ground	>30mA	
GNSS antenna detection is not possible because GNSS antenna power supply is switched off.	--	

1. Please note that the mA ranges 1.4mA...2.2mA and 20mA...30mA are tolerance ranges. The decision threshold should be defined within these ranges.

3 Operating Characteristics

3.1 Power Supply

PLS83-W needs to be connected to a power supply at the SMT application interface - 4 lines BATT+, and GND. There are two separate voltage domains for BATT+:

- $BATT+_{BB}$ with two lines for the general power management.
- $BATT+_{RF}$ with two lines for the RF.

Please note that throughout the document BATT+ refers to both voltage domains and power supply lines - $BATT+_{BB}$ and $BATT+_{RF}$.

The main power supply from an external application has to be a single voltage source and has to be expanded to sub paths (star structure). 150µF capacitors should be placed as close as possible to the BATT+ pads. Figure 21 shows a sample circuit for decoupling capacitors for BATT+.

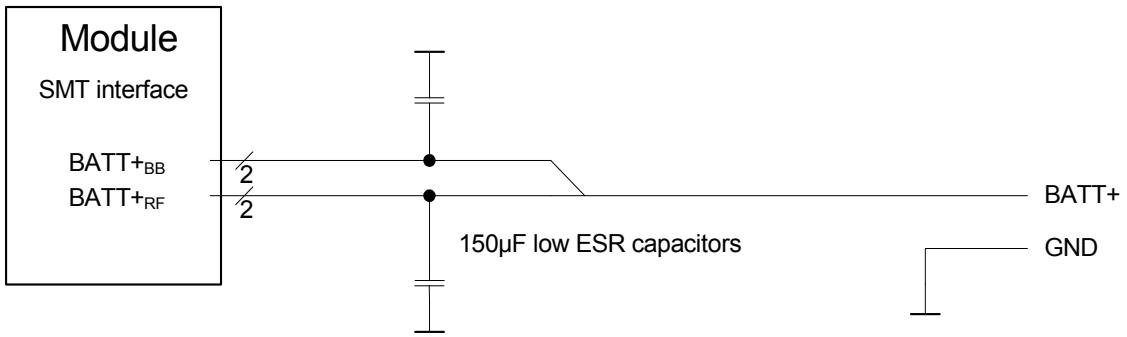

Figure 21: Decoupling capacitor(s) for BATT+

The power supply of PLS83-W must be able to provide the peak current during the uplink transmission.

All the key functions for supplying power to the device are handled by the power management section of the analog controller. This IC provides the following features:

- Stabilizes the supply voltages for the baseband using low drop linear voltage regulators and DC-DC step down switching regulators.
- Switches the module's power voltages for the power-up and -down procedures.
- SIM switch to provide SIM power supply.

4 Mechanical Dimensions, Mounting and Packaging

4.1 Mechanical Dimensions of PLS83-W

Figure 22 shows the top and bottom view of PLS83-W and provides an overview of the board's mechanical dimensions. For further details see Figure 22.

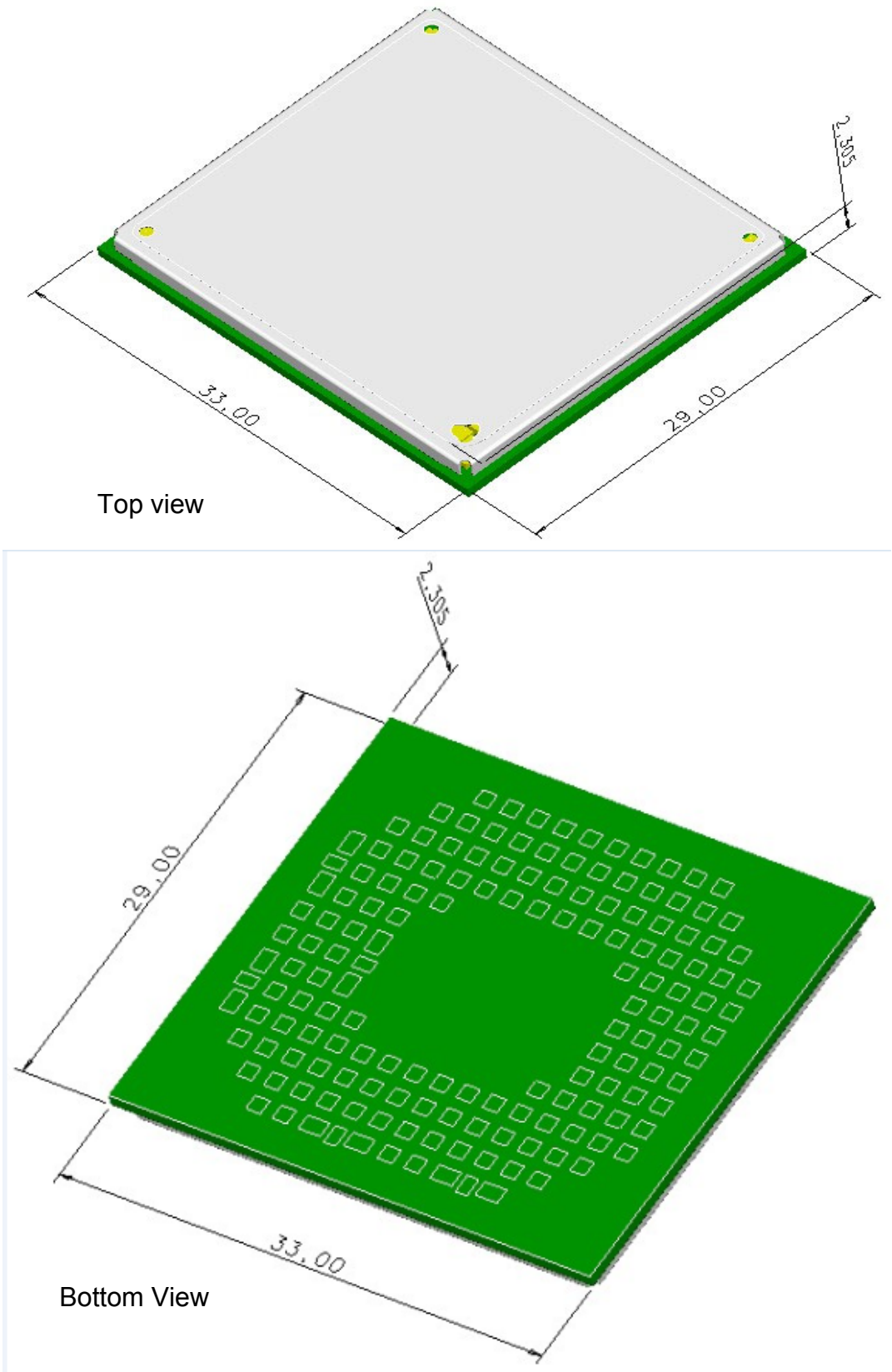

Figure 22: PLS83-W– top and bottom view

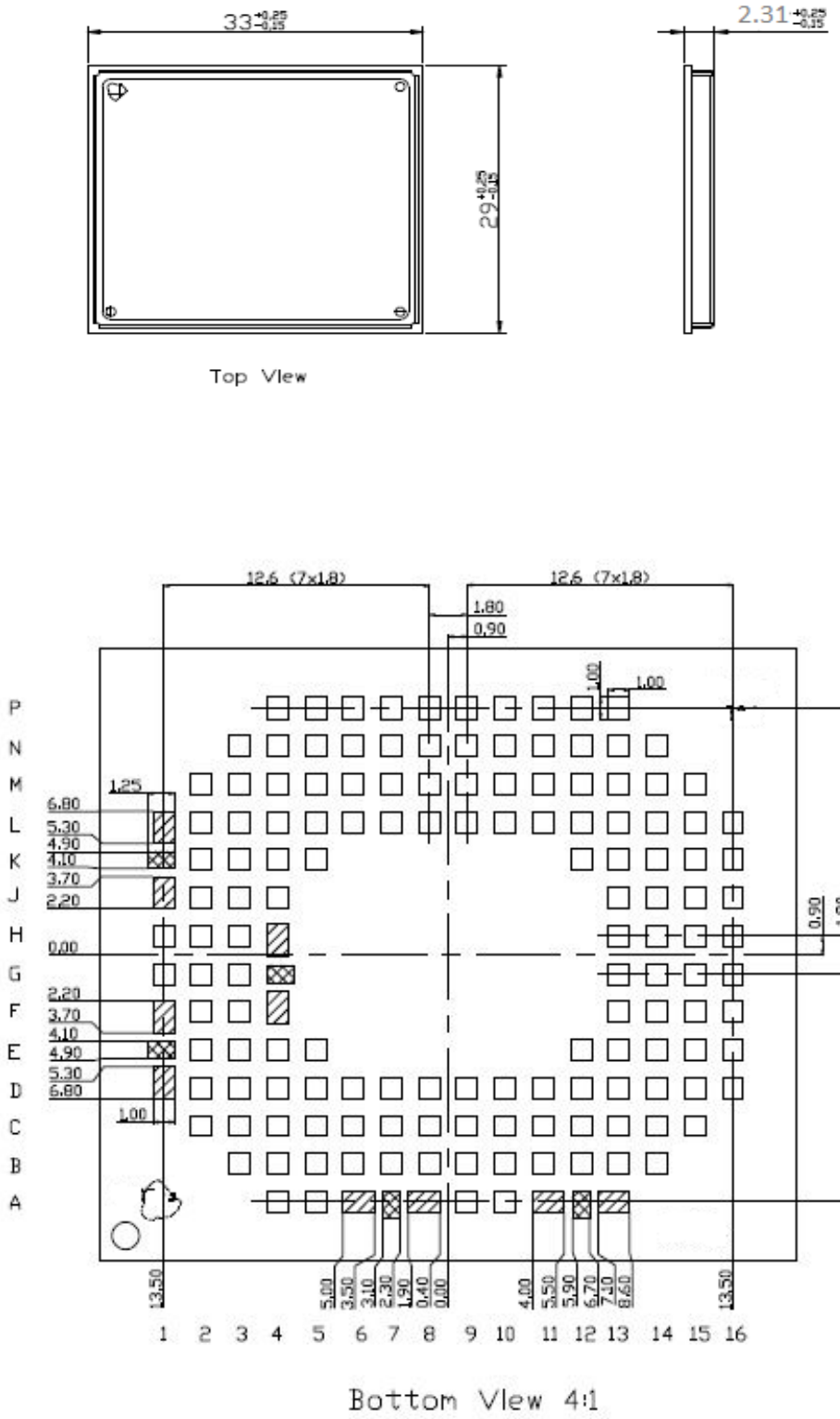

Figure 23: Dimensions of PLS83-W (all dimensions in mm)

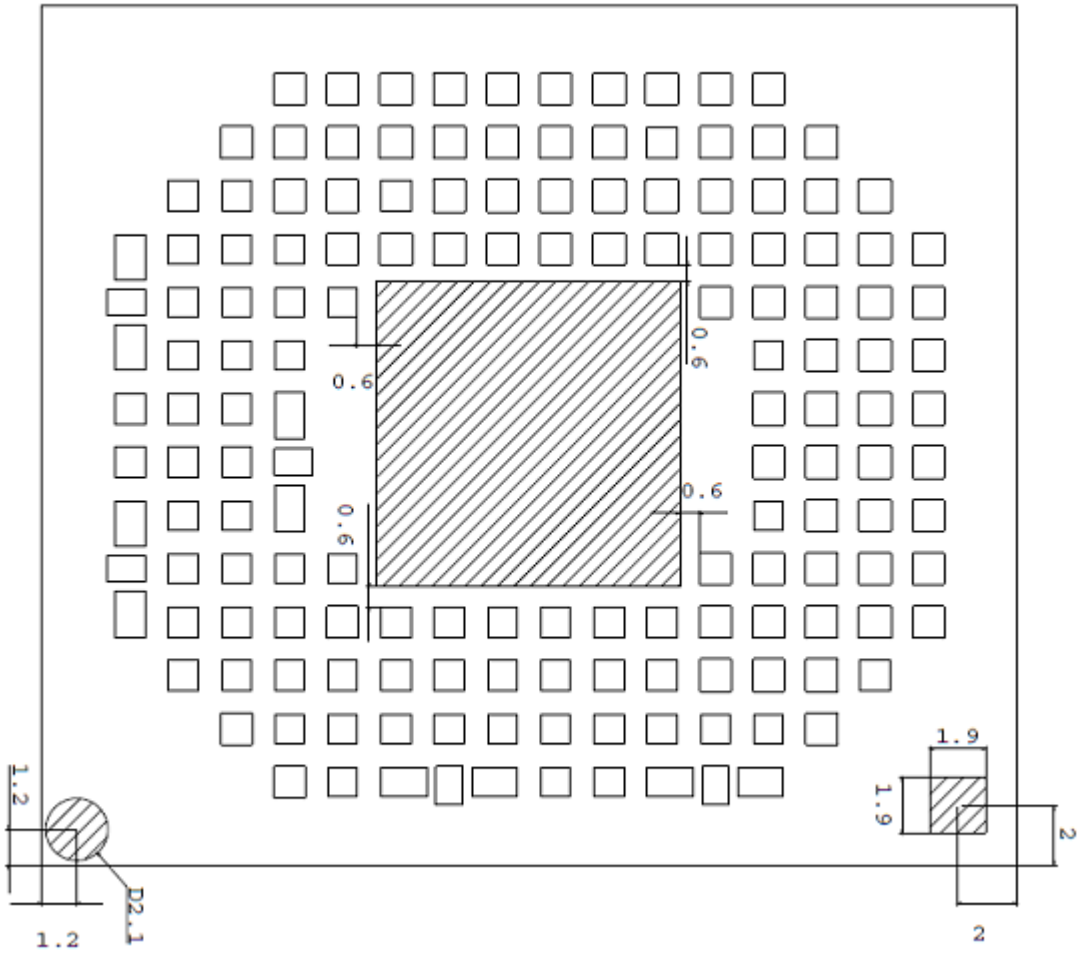

Figure 24: Dimensions of PLS83-W (keepout area recommended)

5 Regulatory and Type Approval Information

5.1 Directives and Standards

PLS83-W is designed to comply with the directives and standards listed below.

It is the responsibility of the application manufacturer to ensure compliance of the final product with all provisions of the applicable directives and standards as well as with the technical specifications provided in the "PLS83-W Hardware Interface Description".[1]

Table 7: Directives

2014/53/EU	Directive of the European Parliament and of the council of 16 April 2014 on the harmonization of the laws of the Member States relating to the making available on the market of radio equipment and repealing Directive 1999/05/EC. The product is labeled with the CE conformity mark.
2002/95/EC (RoHS 1) 2011/65/EC (RoHS 2)	Directive of the European Parliament and of the Council of 27 January 2003 (and revised on 8 June 2011) on the restriction of the use of certain hazardous substances in electrical and electronic equipment (RoHS)

Table 8: Standards of North American type approval

CFR Title 47	Code of Federal Regulations, Part 22, Part 24; US Equipment Authorization FCC
OET Bulletin 65 (Edition 97-01)	Evaluating Compliance with FCC Guidelines for Human Exposure to Radiofrequency Electromagnetic Fields
UL 60 950-1	Product Safety Certification (Safety requirements)
NAPRD.03 V6.1	Overview of PCS Type certification review board Mobile Equipment Type Certification and IMEI control PCS Type Certification Review board (PTCRB)
RSS132 (Issue2) RSS133 (Issue5)	Canadian Standard

Table 9: Standards of European type approval

3GPP TS 51.010-1	Digital cellular telecommunications system (Release 7); Mobile Station (MS) conformance specification;
GCF-CC V3.79	Global Certification Forum - Certification Criteria
ETSI EN 301 511 V12.5.1	Global System for Mobile communications (GSM); Mobile Stations (MS) equipment; Harmonized Standard covering the essential requirements of article 3.2 of Directive 2014/53/EU
ETSI EN 301 908-01 V13.1.1	IMT cellular networks; Harmonized Standard covering the essential requirements of article 3.2 of the Directive 2014/53/EU; Part 1: Introduction and common requirements

1. Manufacturers of applications which can be used in the US shall ensure that their applications have a PTCRB approval. For this purpose they can refer to the PTCRB approval of the respective module.

Table 9: Standards of European type approval

ETSI EN 301 908-02 V11.1.2	IMT cellular networks; Harmonized Standard covering the essential requirements of article 3.2 of the Directive 2014/53/EU; Part 2: CDMA Direct Spread (UTRA FDD) User Equipment (UE)
ETSI EN 301 489-52 V1.1.0	Electromagnetic Compatibility (EMC) standard for radio equipment and services; Part 52: Specific conditions for Cellular Communication Mobile and portable (UE) radio and ancillary equipment; Harmonized Standard covering the essential requirements of article 3.1(b) of Directive 2014/53/EU
ETSI EN 301 908-13 V13.1.1	IMT cellular networks; Harmonized Standard covering the essential requirements of article 3.2 of the Directive 2014/53/EU; Part 13: evolved Universal Terrestrial Radio Access (E-UTRA) User Equipment (UE).
Draft ETSI EN 301 489-01 V2.2.3	Electromagnetic Compatibility (EMC) standard for radio equipment and services; Part 1: Common technical requirements; Harmonized Standard covering the essential requirements of article 3.1(b) of Directive 2014/53/EU and the essential requirements of article 6 of Directive 2014/30/EU
ETSI EN 301489-19 V2.1.1	ElectroMagnetic Compatibility (EMC) standard for radio equipment and services; Part 19: Specific conditions for Receive Only Mobile Earth Stations (ROMES) operating in the 1,5 GHz band providing data communications and GNSS receivers operating in the RNSS band (ROGNSS) providing positioning, navigation, and timing data; Harmonised Standard covering the essential requirements of article 3.1(b) of Directive 2014/53/EU
ETSI EN 303 413 V1.1.1	Satellite Earth Stations and Systems (SES); Global Navigation Satellite System (GNSS) receivers; Radio equipment operating in the 1 164 MHz to 1 300 MHz and 1 559 MHz to 1 610 MHz frequency bands; Harmonised Standard covering the essential requirements of article 3.2 of Directive 2014/53/EU
EN 62368-1:2014 + A11:2017	Audio/video, information and communication technology equipment - Part 1: Safety requirements

Table 10: Requirements of quality

IEC 60068	Environmental testing
DIN EN 60529	IP codes
EN 62311:2008	Assessment of electronic and electrical equipment related to human exposure restrictions for electromagnetic fields (0 Hz - 300 GHz)

Table 11: Standards of the Ministry of Information Industry of the People's Republic of China

SJ/T 11363-2006	"Requirements for Concentration Limits for Certain Hazardous Substances in Electronic Information Products" (2006-06).
SJ/T 11364-2006	"Marking for Control of Pollution Caused by Electronic Information Products" (2006-06). According to the "Chinese Administration on the Control of Pollution caused by Electronic Information Products" (ACPEIP) the EPUP, i.e., Environmental Protection Use Period, of this product is 20 years as per the symbol shown here, unless otherwise marked. The EPUP is valid only as long as the product is operated within the operating limits described in the Thales Hardware Interface Description. Please see Table 12 for an overview of toxic or hazardous substances or elements that might be contained in product parts in concentrations above the limits defined by SJ/T 11363-2006.

Table 12: Toxic or hazardous substances or elements with defined concentration limits

部件名称 Name of the part	有毒有害物质或元素 Hazardous substances					
	铅 (Pb)	汞 (Hg)	镉 (Cd)	六价铬 (Cr(VI))	多溴联苯 (PBB)	多溴二苯醚 (PBDE)
金属部件 (Metal Parts)	O	O	O	O	O	O
电路模块 (Circuit Modules)	X	O	O	O	O	O
电缆及电缆组件 (Cables and Cable Assemblies)	O	O	O	O	O	O
塑料和聚合物部件 (Plastic and Polymeric parts)	O	O	O	O	O	O

O:
表示该有毒有害物质在该部件所有均质材料中的含量均在SJ/T11363-2006 标准规定的限量要求以下。
Indicates that this toxic or hazardous substance contained in all of the homogeneous materials for this part is below the limit requirement in SJ/T11363-2006.

X:
表示该有毒有害物质至少在该部件的某一均质材料中的含量超出SJ/T11363-2006标准规定的限量要求。
Indicates that this toxic or hazardous substance contained in at least one of the homogeneous materials used for this part *might exceed* the limit requirement in SJ/T11363-2006.

5.2 SAR requirements specific to portable mobiles

Mobile phones, PDAs or other portable transmitters and receivers incorporating a GSM/UMTS module must be in accordance with the guidelines for human exposure to radio frequency energy. This requires the Specific Absorption Rate (SAR) of portable PLS83-W based applications to be evaluated and approved for compliance with national and/or international regulations.

Since the SAR value varies significantly with the individual product design manufacturers are advised to submit their product for approval if designed for portable use. For European/US/Australian-markets the relevant directives are mentioned below. It is the responsibility of the manufacturer of the final product to verify whether or not further standards, recommendations or directives are in force outside these areas.

Products intended for sale on US markets

ES 59005/ANSI C95.1	Considerations for evaluation of human exposure to Electromagnetic Fields (EMFs) from Mobile Telecommunication Equipment (MTE) in the frequency range 30MHz - 6GHz

Products intended for sale on European markets

EN 50360	Product standard to demonstrate the compliance of mobile phones with the basic restrictions related to human exposure to electromagnetic fields (300MHz - 3GHz)
EN 62311:2008	Assessment of electronic and electrical equipment related to human expo-sure restrictions for electromagnetic fields (0 Hz - 300 GHz)

Please note that SAR requirements are specific only for portable devices and not for mobile devices as defined below:

- Portable device:
  A portable device is defined as a transmitting device designed to be used so that the radiating structure(s) of the device is/are within 20 centimeters of the body of the user.
- Mobile device:
  A mobile device is defined as a transmitting device designed to be used in other than fixed locations and to generally be used in such a way that a separation distance of at least 20 centimeters is normally maintained between the transmitter's radiating structure(s) and the body of the user or nearby persons. In this context, the term "fixed location" means that the device is physically secured at one location and is not able to be easily moved to another location.

5.3 Reference Equipment for Type Approval

The Thales reference setup submitted to type approve PLS83-W (including a special approval adapter for the DSB75) is shown in the following figure[1]:

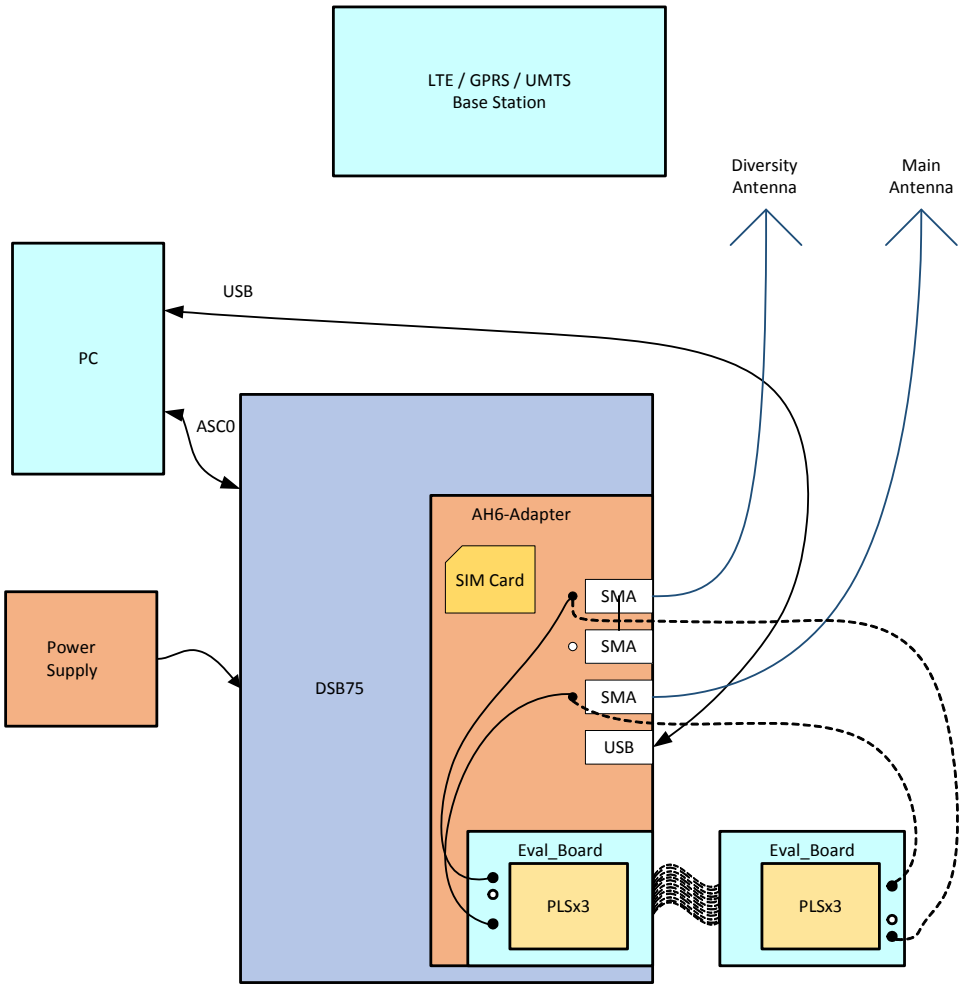

Figure 25: Reference equipment for Type Approval

1. For RF performance tests a mini-SMT/U.FL to SMA adapter with attached 6dB coaxial attenuator is chosen to connect the evaluation module directly to the GSM/UMTS test equipment instead of employing the SMA antenna connectors on the PLS83-W-DSB75 adapter as shown in Figure 25. The following products are recommended:
Hirose SMA-Jack/U.FL-Plug conversion adapter HRMJ-U.FLP(40)
(for details see http://www.hirose-connectors.com/ or http://www.farnell.com/
Aeroflex Weinschel Fixed Coaxial Attenuator Model 3T/4T
(for details see http://www.aeroflex.com/ams/weinschel/pdfiles/wmod3&4T.pdf)

5.4 Compliance with FCC/IC/ISED Rules and Regulations

The Equipment Authorization Certification for the Thales reference application described in Section 5.3 will be registered under the following identifiers:

FCC Identifier: QIPPLS83-W
ISED Certification Number: 7830A-PLS83W
Granted to THALES DIS AIS Deutschland GmbH

Manufacturers of mobile or fixed devices incorporating PLS83-W modules are authorized to use the FCC Grants and ISED Certificates of the PLS83-W modules for their own final products according to the conditions referenced in these documents. In this case, an FCC/IC label of the module shall be visible from the outside, or the host device shall bear a second label stating "Contains FCC ID: QIPPLS83-W", and accordingly "Contains IC: 7830A-PLS83W". The integration is limited to fixed or mobile categorized host devices, where a separation distance between the antenna and any person of min. 20cm can be assured during normal operating conditions.

For moble and fixed operation configurations the antenna gain, including cable loss, must not exceed the limits listed in the following Table 13 for FCC and ISED.

Table 13: Antenna gain limits for FCC and ISED

Operation band	FCC limit	ISED limit	Unit
Maximum gain in GSM/GPRS 850	8.60	5.30	dBi
Maximum gain in PCS 1900	10.20	10.20	dBi
Maximum gain in WCDMA Band 2	8.01	8.01	dBi
Maximum gain in WCDMA Band 4	5.00	5.00	dBi
Maximum gain in WCDMA Band 5	9.40	6.10	dBi
Maximum gain in LTE Band 2	8.01	8.01	dBi
Maximum gain in LTE Band 4	5.00	5.00	dBi
Maximum gain in LTE Band 5	9.40	6.10	dBi
Maximum gain in LTE Band 7	8.01	8.01	dBi
Maximum gain in LTE Band 12	8.70	5.61	dBi
Maximum gain in LTE Band 13	9.16	5.93	dBi
Maximum gain in LTE Band 26	9.30	6.10	dBi
Maximum gain in LTE Band 38	8.01	8.01	dBi
Maximum gain in LTE Band 41	8.01	8.01	dBi
Maximum gain in LTE Band 66	5.00	5.00	dBi

IMPORTANT:
Manufacturers of portable applications incorporating PLS83-W modules are required to have their final product certified and apply for their own FCC Grant related to the specific portable mobile. This is mandatory to meet the SAR requirements for portable mobiles (see Section 5.2 for detail).

Changes or modifications not expressly approved by the party responsible for compliance could void the user's authority to operate the equipment.

Note: This equipment has been tested and found to comply with the limits for a Class B digital device, pursuant to part 15 of the FCC Rules. These limits are designed to provide reasonable protection against harmful interference in a residential installation. This equipment generates, uses and can radiate radio frequency energy and, if not installed and used in accordance with the instructions, may cause harmful interference to radio communications. However, there is no guarantee that interference will not occur in a particular installation. If this equipment does cause harmful interference to radio or television reception, which can be determined by turning the equipment off and on, the user is encouraged to try to correct the interference by one or more of the following measures:

- Reorient or relocate the receiving antenna.
- Increase the separation between the equipment and receiver.
- Connect the equipment into an outlet on a circuit different from that to which the receiver is connected.
- Consult the dealer or an experienced radio/TV technician for help.

This Class B digital apparatus complies with Canadian ICES-003.

FCC Part 15.19 Warning Statement
THIS DEVICE COMPLIES WITH PART 15 OF THE FCC RULES. OPERATION IS SUBJECT TO THE FOLLOWING TWO CONDITIONS: (1) THIS DEVICE MAY NOT CAUSE HARMFUL INTERFERENCE, AND (2) THIS DEVICE MUST ACCEPT ANY INTERFERENCE RECEIVED, INCLUDING INTERFERENCE THAT MAY CAUSE UNDESIRED OPERATION.

If Canadian approval is requested for devices incorporating PLS83-W modules the below notes will have to be provided in the English and French language in the final user documentation. Manufacturers/OEM Integrators must ensure that the final user documentation does not contain any information on how to install or remove the module from the final product.

Notes (IC):
(EN) This Class B digital apparatus complies with Canadian ICES-003 and RSS-210. Operation is subject to the following two conditions: (1) this device may not cause interference, and (2) this device must accept any interference, including interference that may cause undesired operation of the device.

(FR) Cet appareil numérique de classe B est conforme aux normes canadiennes ICES-003 et RSS-210. Son fonctionnement est soumis aux deux conditions suivantes: (1) cet appareil ne doit pas causer d'interférence et (2) cet appareil doit accepter toute interférence, notamment les interférences qui peuvent affecter son fonctionnement.

(EN) Radio frequency (RF) Exposure Information
The radiated output power of the Wireless Device is below the Industry Canada (IC) radio frequency exposure limits. The Wireless Device should be used in such a manner such that the potential for human contact during normal operation is minimized.
This device has also been evaluated and shown compliant with the IC RF Exposure limits under mobile exposure conditions. (antennas at least 20cm from a person‘s body).

(FR) Informations concernant l'exposltion aux fréquences radio (RF)
La puissance de sortie émise par l'appareil de sans fil est inférieure à la limite d'exposition aux fréquences radio d‘Industry Canada (IC). Utilisez l'appareil de sans fil de façon à minimiser les contacts humains lors du fonctionnement normal.

Ce périphérique a également été évalué et démontré conforme aux limites d'exposition aux RF

d'IC dans des conditions d'exposition à des appareils mobiles (les antennes se situent à moins de 20cm du corps d'une personne).

6 Document Information

6.1 Revision History

New document: "Cinterion® PLS83-W Hardware Interface Overview" Version 00.860

Chapter	What is new
--	Initial document setup.

6.2 Related Documents

[1] PLS83-W AT Command Set
[2] PLS83-W Release Note
[3] Universal Serial Bus Specification Revision 2.0, April 27, 2000
[4] Application Note 48: SMT Module Integration
[5] Differences between Selected Cinterion® Modules, Hardware Migration Guide

6.3 Terms and Abbreviations

Abbreviation	Description
ADC	Analog-to-digital converter
AGC	Automatic Gain Control
ANSI	American National Standards Institute
ARFCN	Absolute Radio Frequency Channel Number
ARP	Antenna Reference Point
ASC0/ASC1	Asynchronous Controller. Abbreviations used for first and second serial interface of PLS83-W
B	Thermistor Constant
BER	Bit Error Rate
BIP	Bearer Independent Protocol
BTS	Base Transceiver Station
CB or CBM	Cell Broadcast Message
CE	Conformité Européene (European Conformity)
CHAP	Challenge Handshake Authentication Protocol
CPU	Central Processing Unit
CS	Coding Scheme
CSD	Circuit Switched Data
CTS	Clear to Send
DAC	Digital-to-Analog Converter
dBm0	Digital level, 3.14dBm0 corresponds to full scale, see ITU G.711, A-law

Abbreviation	Description
DCE	Data Communication Equipment (typically modems, e.g. Thales module)
DRX	Discontinuous Reception
DSB	Development Support Box
DSP	Digital Signal Processor
DSR	Data Set Ready
DTR	Data Terminal Ready
DTX	Discontinuous Transmission
EFR	Enhanced Full Rate
EIRP	Equivalent Isotropic Radiated Power
EMC	Electromagnetic Compatibility
ERP	Effective Radiated Power
ESD	Electrostatic Discharge
ETS	European Telecommunication Standard
ETSI	European Telecommunication Standards Institute
FCC	Federal Communications Commission (U.S.)
FDMA	Frequency Division Multiple Access
FR	Full Rate
GMSK	Gaussian Minimum Shift Keying
GPIO	General Purpose Input/Output
HiZ	High Impedance
HR	Half Rate
I/O	Input/Output
IC	Integrated Circuit
IMEI	International Mobile Equipment Identity
ISO	International Standards Organization
ITU	International Telecommunications Union
kbps	kbits per second
LED	Light Emitting Diode
Li-Ion/Li+	Lithium-Ion
Li battery	Rechargeable Lithium Ion or Lithium Polymer battery
LPM	Link Power Management
Mbps	Mbits per second
MMI	Man Machine Interface
MO	Mobile Originated
MS	Mobile Station (module), also referred to as TE
MSISDN	Mobile Station International ISDN number
MT	Mobile Terminated

Abbreviation	Description
NTC	Negative Temperature Coefficient
OEM	Original Equipment Manufacturer
PA	Power Amplifier
PAP	Password Authentication Protocol
PBCCH	Packet Switched Broadcast Control Channel
PCB	Printed Circuit Board
PCL	Power Control Level
PDU	Protocol Data Unit
PLL	Phase Locked Loop
PPP	Point-to-point protocol
PSK	Phase Shift Keying
PSU	Power Supply Unit
PWM	Pulse Width Modulation
R&TTE	Radio and Telecommunication Terminal Equipment
RAM	Random Access Memory
RF	Radio Frequency
RLS	Radio Link Stability
RMS	Root Mean Square (value)
RoHS	Restriction of the use of certain hazardous substances in electrical and electronic equipment.
ROM	Read-only Memory
RTC	Real Time Clock
RTS	Request to Send
Rx	Receive Direction
SAR	Specific Absorption Rate
SAW	Surface Accoustic Wave
SELV	Safety Extra Low Voltage
SIM	Subscriber Identification Module
SMD	Surface Mount Device
SMS	Short Message Service
SMT	Surface Mount Technology
SPI	Serial Peripheral Interface
SRAM	Static Random Access Memory
TA	Terminal adapter (e.g. module)
TDMA	Time Division Multiple Access
TE	Terminal Equipment, also referred to as DTE
TLS	Transport Layer Security
Tx	Transmit Direction

Abbreviation	Description
UART	Universal asynchronous receiver-transmitter
URC	Unsolicited Result Code
USSD	Unstructured Supplementary Service Data
VSWR	Voltage Standing Wave Ratio

6.4 Safety Precaution Notes

The following safety precautions must be observed during all phases of the operation, usage, service or repair of any cellular terminal or mobile incorporating PLS83-W. Manufacturers of the cellular terminal are advised to convey the following safety information to users and operating personnel and to incorporate these guidelines into all manuals supplied with the product. Failure to comply with these precautions violates safety standards of design, manufacture and intended use of the product. Thales assumes no liability for customer's failure to comply with these precautions.

	When in a hospital or other health care facility, observe the restrictions on the use of mobiles. Switch the cellular terminal or mobile off, if instructed to do so by the guidelines posted in sensitive areas. Medical equipment may be sensitive to RF energy. The operation of cardiac pacemakers, other implanted medical equipment and hearing aids can be affected by interference from cellular terminals or mobiles placed close to the device. If in doubt about potential danger, contact the physician or the manufacturer of the device to verify that the equipment is properly shielded. Pacemaker patients are advised to keep their hand-held mobile away from the pacemaker, while it is on.
	Switch off the cellular terminal or mobile before boarding an aircraft. Make sure it cannot be switched on inadvertently. The operation of wireless appliances in an aircraft is forbidden to prevent interference with communications systems. Failure to observe these instructions may lead to the suspension or denial of cellular services to the offender, legal action, or both.
	Do not operate the cellular terminal or mobile in the presence of flammable gases or fumes. Switch off the cellular terminal when you are near petrol stations, fuel depots, chemical plants or where blasting operations are in progress. Operation of any electrical equipment in potentially explosive atmospheres can constitute a safety hazard.
	Your cellular terminal or mobile receives and transmits radio frequency energy while switched on. Remember that interference can occur if it is used close to TV sets, radios, computers or inadequately shielded equipment. Follow any special regulations and always switch off the cellular terminal or mobile wherever forbidden, or when you suspect that it may cause interference or danger.
	Road safety comes first! Do not use a hand-held cellular terminal or mobile when driving a vehicle, unless it is securely mounted in a holder for speakerphone operation. Before making a call with a hand-held terminal or mobile, park the vehicle. Speakerphones must be installed by qualified personnel. Faulty installation or operation can constitute a safety hazard.
	IMPORTANT! Cellular terminals or mobiles operate using radio signals and cellular networks. Because of this, connection cannot be guaranteed at all times under all conditions. Therefore, you should never rely solely upon any wireless device for essential communications, for example emergency calls. Remember, in order to make or receive calls, the cellular terminal or mobile must be switched on and in a service area with adequate cellular signal strength. Some networks do not allow for emergency calls if certain network services or phone features are in use (e.g. lock functions, fixed dialing etc.). You may need to deactivate those features before you can make an emergency call. Some networks require that a valid SIM card be properly inserted in the cellular terminal or mobile.

7 Appendix

7.1 List of Parts and Accessories

Table 14: List of parts and accessories

Description	Supplier	Ordering information
PLS83-W	Thales	Standard module Thales IMEI: Packaging unit (ordering) number: L30960-N6530-A100 Module label number1: S30960-S6530-A100-1
PLS83-W Evaluation Module	Thales	Ordering number: L30960-N6531-A100
DSB-mini	Thales	Ordering number: L30960-N0030-A100
DSB75 Evaluation Kit	Thales	Ordering number: L36880-N8811-A100
EVAL DSB Adapter for mounting PLSx3 evaluation modules onto DSB75	Thales	Ordering number: L30960-N0100-A100
LGA DevKit	Thales	LGA DevKit consists of Cinterion® LGA DevKit L Base PCB: Ordering number: L30960-N0112-A100 Cinterion® LGA DevKit Socket SML: Ordering number: L30960-N0110-A100

Table 15: Molex sales contacts (subject to change)

Molex For further information please click: http://www.molex.com	Molex Deutschland GmbH Otto-Hahn-Str. 1b 69190 Walldorf Germany Phone: +49-6227-3091-0 Fax: +49-6227-3091-8100 Email: mxgermany@molex.com	American Headquarters Lisle, Illinois 60532 U.S.A. Phone: +1-800-78MOLEX Fax: +1-630-969-1352
Molex China Distributors Beijing, Room 1311, Tower B, COFCO Plaza No. 8, Jian Guo Men Nei Street, 100005 Beijing P.R. China Phone: +86-10-6526-9628 Fax: +86-10-6526-9730	Molex Singapore Pte. Ltd. 110, International Road Jurong Town, Singapore 629174 Phone: +65-6-268-6868 Fax: +65-6-265-6044	Molex Japan Co. Ltd. 1-5-4 Fukami-Higashi, Yamato-City, Kanagawa, 242-8585 Japan Phone: +81-46-265-2325 Fax: +81-46-265-2365

THALES DIS AIS Deutschland GmbH
Werinherstrasse 81
81541 Munich
Germany

© Thales 2021. All rights reserved. Thales, the Thales logo, are trademarks and service marks of Thales and are registered in certain countries.