3.11.1 Installing the USB Modem Driver

This section assumes you are familiar with installing and configuring a modem under Windows 2000 and Windows XP. As both operating systems use multiple methods to access modem settings this section provides only a brief summary of the most important steps.

Take care that the “usbmodem.inf” file delivered with TC65 is at hand. Connect the USB cable to the TC65 host application (for example the evaluation board DSB75) and the PC. Windows detects TC65 as a new USB modem, opens the *Found New Hardware Wizard* and reports that it is searching for the “Siemens AG WM USB Modem” driver. Follow the instructions on the screen and specify the path where the “usbmodem.inf” file is located. Windows will copy the required software to your computer and configure the modem by assigning a free COM port. If you are already using more than one COM port then the next free one will be allocated. Click *Finish* to complete the installation.

Notes for Windows 2000 only:

- During the installation procedure you will be prompted for the “usbser.sys” driver. Make sure the file is present before you start installing the above inf file.
  The “usbser.sys” file is not delivered as a single file, but must be extracted from a Windows 2000 cabinet file. This is either the file “driver.cab” located in the “I386” folder of the original Windows 2000 CD or a later cabinet file inside the Service Pack. SP4 for example includes the “sp4.cab” file which can be found in its “I386” folder. The “usbser.sys” driver from the Service Pack has priority over one provided with the standard Windows 2000 install CD.
- It is necessary to restart Windows 2000 to make the changes take effect.

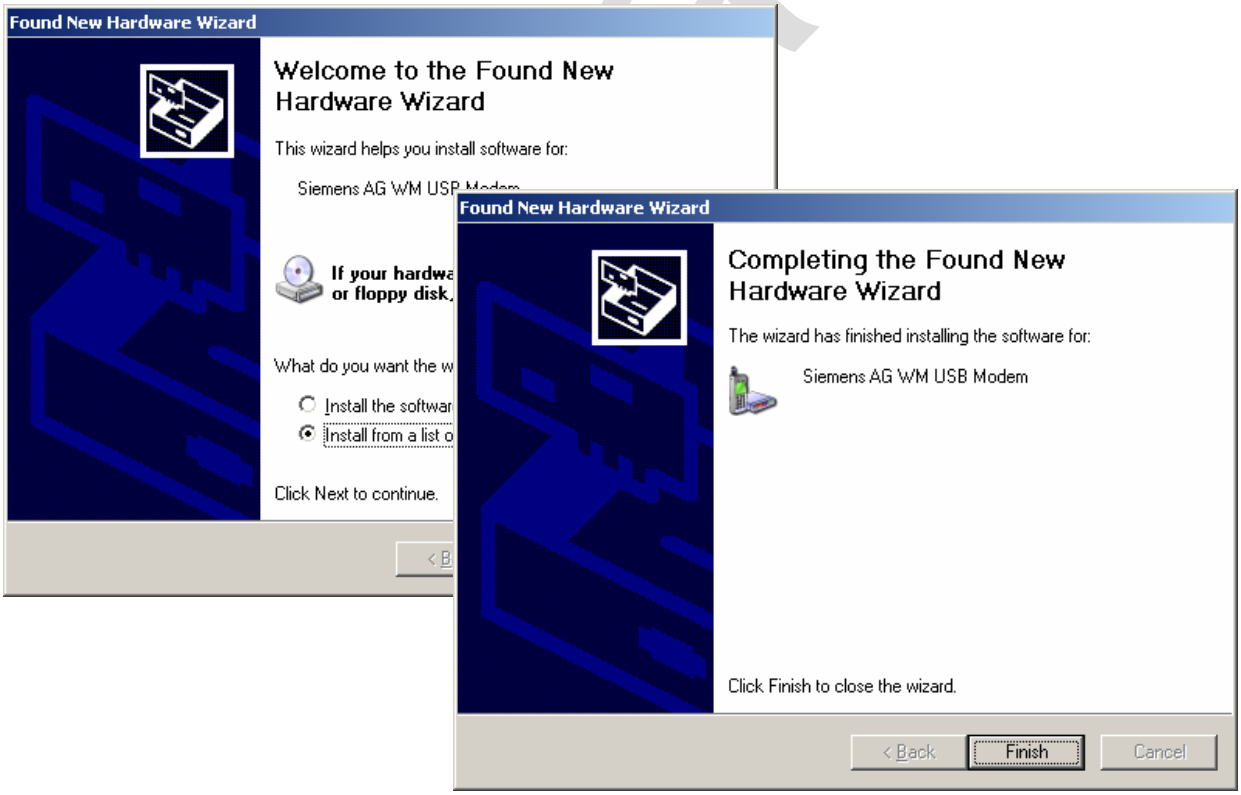

You can find the “Siemens AG WM USB Modem” listed under *Control Panel | Phone and Modem Options | Modems.*

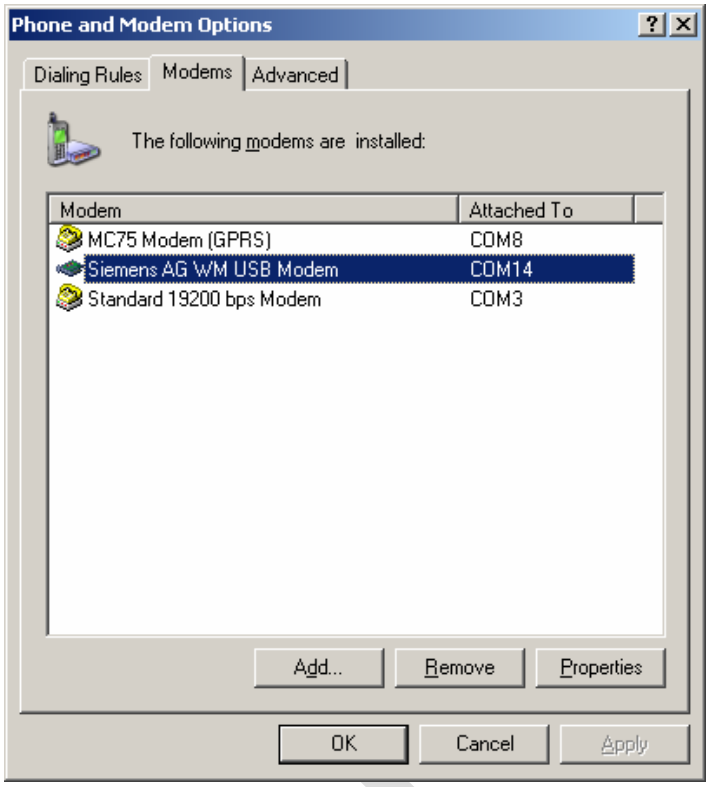

Troubleshooting for installation problems

If Windows fails to assign the next free COM port to TC65 and, for example, allocates a COM port already used by another modem you can manually select a free port as follows:

Open the Windows *Device Manager*, select the installed “Siemens AG WM USB Modem”, click *Properties*, select the *Advanced* tab and click *Advanced Port settings*. From the listbox *COM Port Number* choose a free port. To make the changes take effect disconnect and re-connect the USB cable. If not yet successful, also restart Windows.

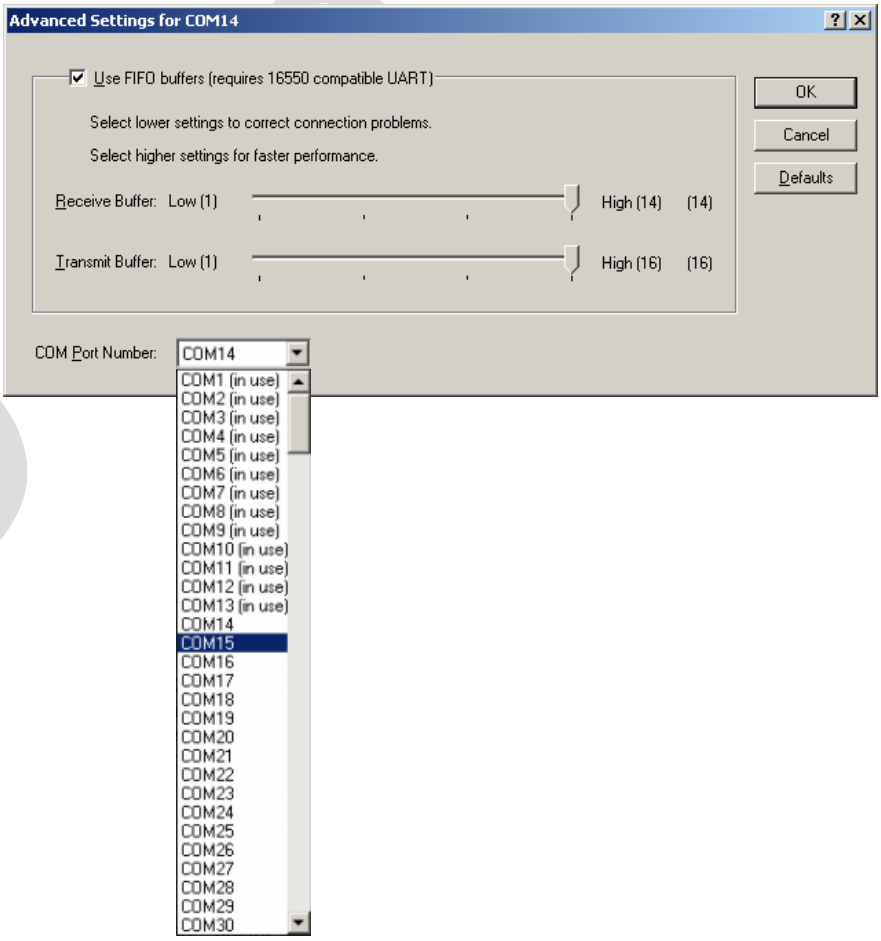

3.12 I²C Interface

I²C is a serial, 8-bit oriented data transfer bus for bit rates up to 400kbps in Fast mode. It consists of two lines, the serial data line I2CDAT and the serial clock line I2CCLK.

The TC65 module acts as a single master device, e.g. the clock I2CCLK is driven by module. I2CDAT is a bi-directional line.

Each device connected to the bus is software addressable by a unique 7-bit address, and simple master/slave relationships exist at all times. The module operates as master-transmitter or as master-receiver. The customer application transmits or receives data only on request of the module.

To configure and activate the I²C bus use the AT^SSPI command. If the I²C bus is active the two lines I2CCLK and I2DAT are locked for use as SPI lines. Vice versa, the activation of the SPI locks both lines for I²C. Detailed information on the AT^SSPI command as well explanations on the protocol and syntax required for data transmission can be found in [1].

The I²C interface can be powered from an external supply or via the VEXT line of TC65. If connected to the VEXT line the I²C interface will be properly shut down when the module enters the Power-down mode. If you prefer to connect the I²C interface to an external power supply, take care that VCC of the application is in the range of V_{VEXT} and that the interface is shut down when the PWR_IND signal goes high. See figures below as well as Section 7 and Figure 38.

In the application I2CDAT and I2CCLK lines need to be connected to a positive supply voltage via a pull-up resistor.

For electrical characteristics please refer to Table 17.

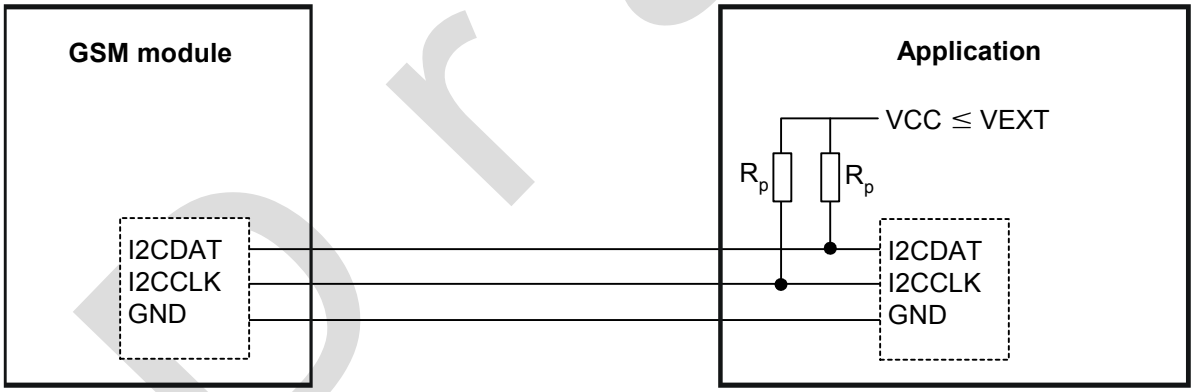

Figure 15: I²C interface connected to VCC of application

Draft

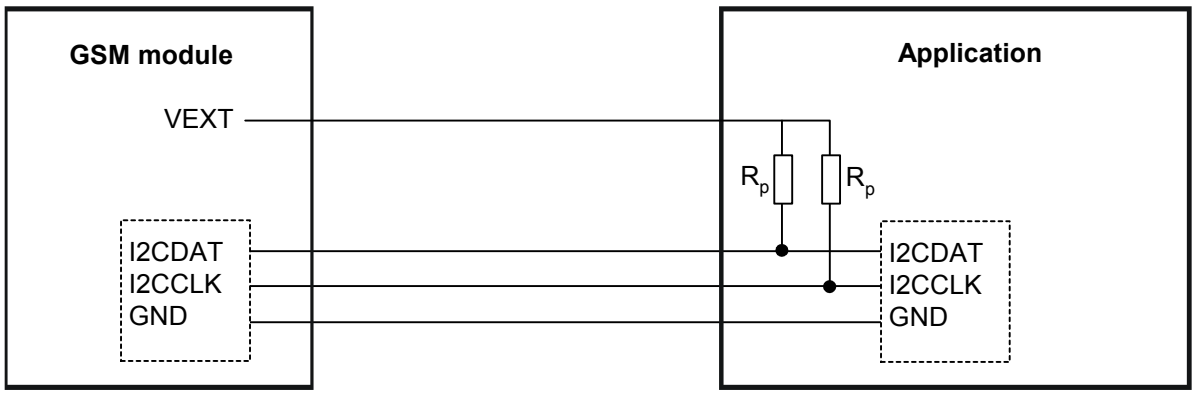

Figure 16: I^2C interface connected to VEXT line of TC65

Note: Good care should be taken when creating the PCB layout of the host application: The traces of I2CCLK and I2CDAT should be equal in length and as short as possible.

Draft

3.13 Audio Interfaces

TC65 comprises three audio interfaces available on the board-to-board connector:

- Two analog audio interfaces, both with balanced or single-ended inputs/outputs.
- Serial digital audio interface (DAI) designed for PCM (Pulse Code Modulation).

This means you can connect up to three different audio devices, although only one interface can be operated at a time. Using the AT^SAIC command you can easily switch back and forth.

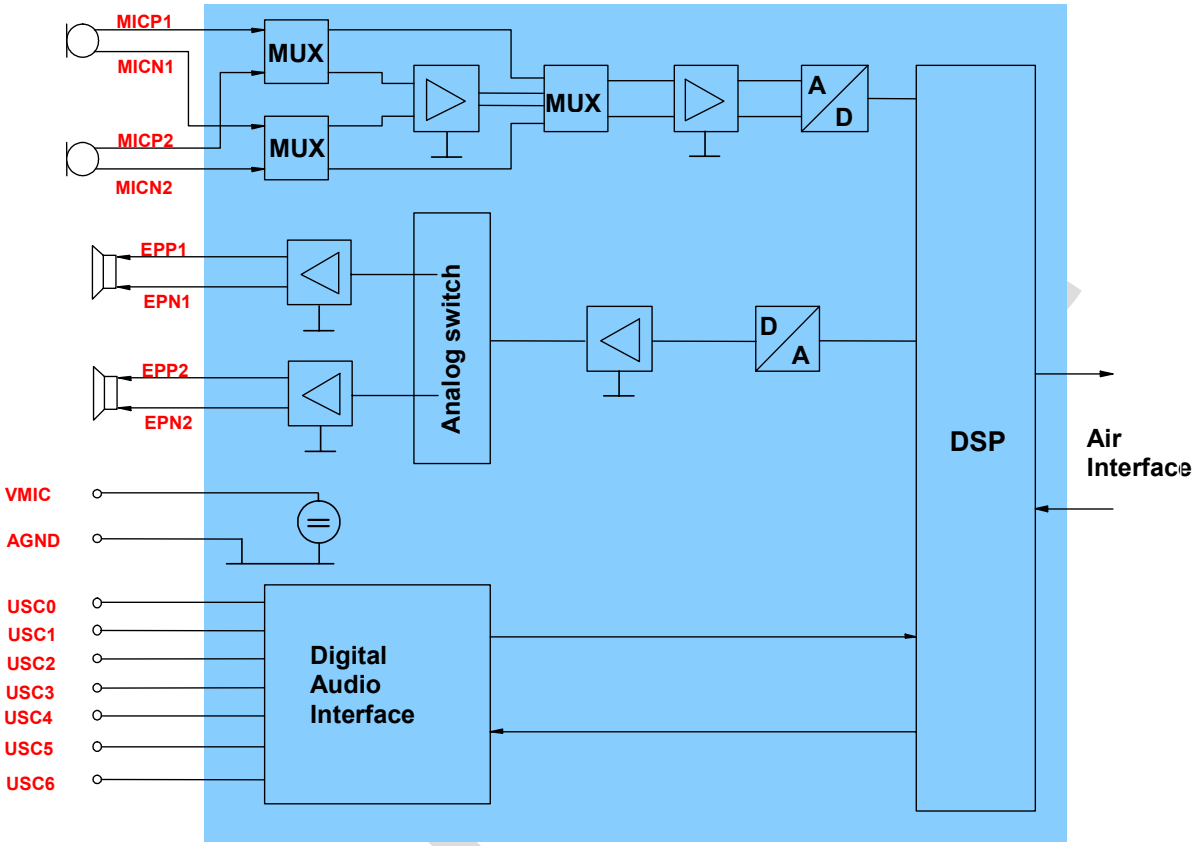

Figure 17: Audio block diagram

To suit different types of accessories the audio interfaces can be configured for different audio modes via the AT^SNFS command. The electrical characteristics of the voiceband part vary with the audio mode. For example, sending and receiving amplification, sidetone paths, noise suppression etc. depend on the selected mode and can be altered with AT commands (except for mode 1).

Both analog audio interfaces can be used to connect headsets with microphones or speakerphones. Headsets can be operated in audio mode 3, speakerphones in audio mode 2. Audio mode 5 can be used for a speech coder without signal pre or post processing.

When shipped from factory, all audio parameters of TC65 are set to interface 1 and audio mode 1. This is the default configuration optimized for the Votronic HH-SI-30.3/V1.1/0 handset and used for type approving the Siemens reference configuration. Audio mode 1 has fix parameters which cannot be modified. To adjust the settings of the Votronic handset simply change to another audio mode.

3.13.1 Speech Processing

The speech samples from the ADC or DAI are handled by the DSP of the baseband controller to calculate e.g. amplifications, sidetone, echo cancellation or noise suppression depending on the configuration of the active audio mode. These processed samples are passed to the speech encoder. Received samples from the speech decoder are passed to the DAC or DAI after post processing (frequency response correction, adding sidetone etc.).

Full rate, half rate, enhanced full rate, adaptive multi rate (AMR), speech and channel encoding including voice activity detection (VAD) and discontinuous transmission (DTX) and digital GMSK modulation are also performed on the GSM baseband processor.

3.13.2 Microphone Circuit

TC65 has two identical analog microphone inputs. There is no on-board microphone supply circuit, except for the internal voltage supply VMIC and the dedicated audio ground line AGND. Both lines are well suited to feed a balanced audio application or a single-ended audio application.

The AGND line on the TC65 board is especially provided to achieve best grounding conditions for your audio application. As there is less current flowing than through other GND lines of the module or the application, this solution will avoid hum and buzz problems.

3.13.2.1 Single-ended Microphone Input

Figure 18 as well as Figure 38 show an example of how to integrate a single-ended microphone input.

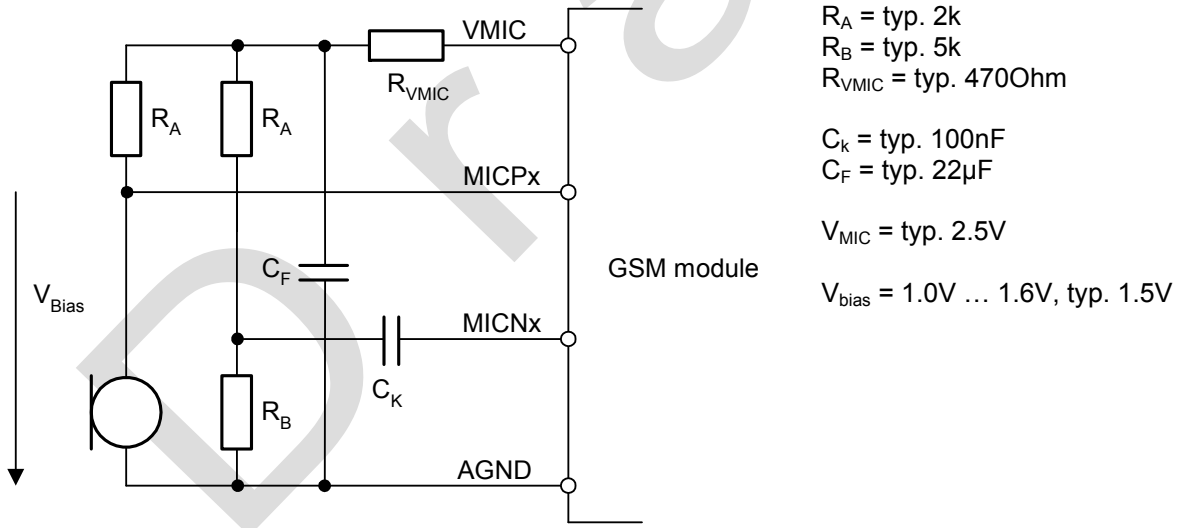

Figure 18: Single ended microphone input

R_A has to be chosen so that the DC voltage across the microphone falls into the bias voltage range of 1.0V to 1.6V and the microphone feeding current meets its specification.

The MICNx input is automatically self biased to the MICPx DC level. It is AC coupled via C_K to a resistive divider which is used to optimize supply noise cancellation by the differential microphone amplifier in the module.

Draft

The VMIC voltage should be filtered if gains larger than 20dB are used. The filter can be attached as a simple first order RC-network (R_{VMIC} and C_F).

This circuit is well suited if the distance between microphone and module is kept short. Due to good grounding the microphone can be easily ESD protected as its housing usually connects to the negative terminal.

3.13.2.2 Differential Microphone Input

Figure 19 shows a differential solution for connecting an electret microphone.

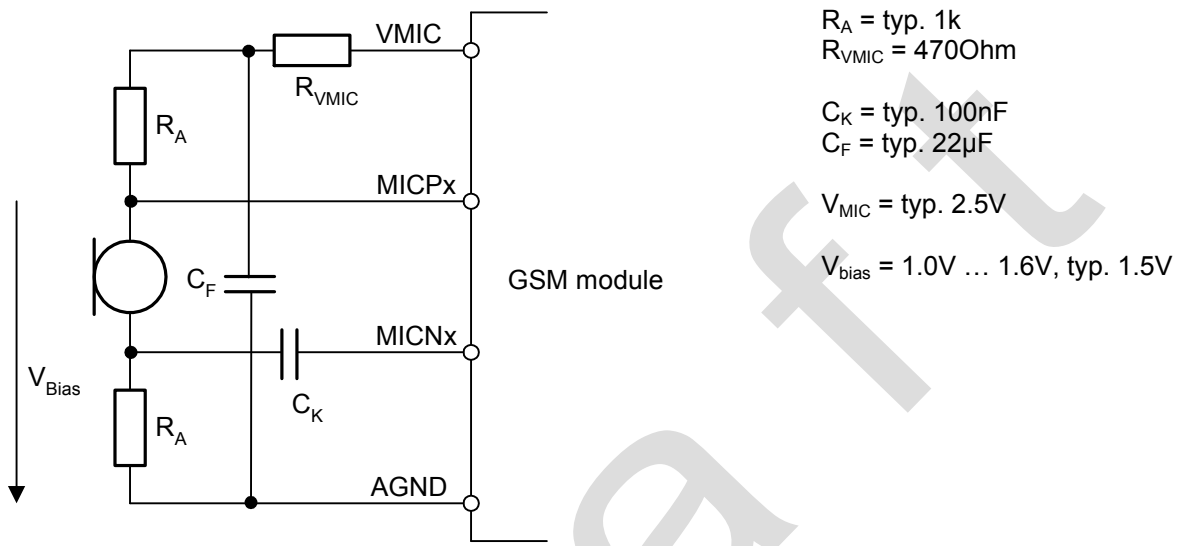

Figure 19: Differential microphone input

The resulting DC voltage between MICPx and AGND should be in the range of 1.0V to 1.6V to bias the input amplifier. MICNx is automatically self biased to the MICPx DC level. The resulting AC differential voltage is then amplified in the GSM module.

The VMIC voltage should be filtered if gains larger than 20dB are used. The filter can be attached as a simple first order RC-network (R_{VMIC} and C_F).

The advantage of this circuit is that it can be used if the application involves longer lines between microphone and module.

Draft

3.13.2.3 Line Input Configuration with OpAmp

Figure 20 shows an example of how to connect an opamp into the microphone circuit.

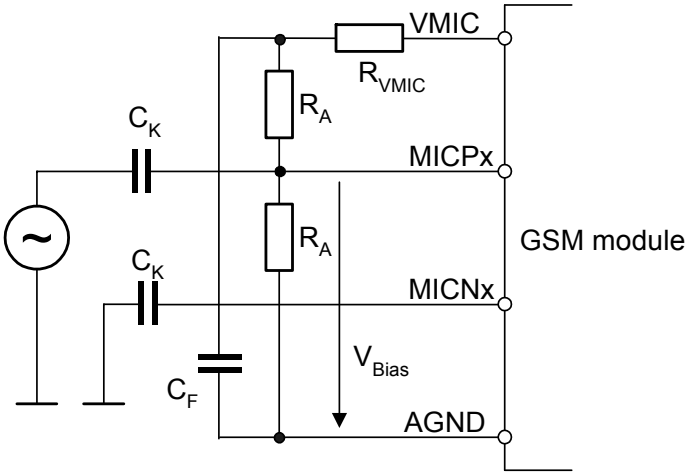

R_A = typ. 47k
R_{VMIC} = 470Ohm

C_k = typ. 100nF
C_F = typ. 22µF

V_{MIC} = typ. 2.5V

V_{bias} = typ. ½ V_{MIC} = 1.25V

Figure 20: Line input configuration with OpAmp

The AC source (e.g. an opamp) and its reference potential have to be AC coupled to the MICPx resp. MICNx input terminals. The voltage divider between VMIC and AGND is necessary to bias the input amplifier. MICNx is automatically self biased to the MICPx DC level.

The VMIC voltage should be filtered if gains larger than 20dB are used. The filter can be attached as a simple first order RC-network (R_{VMIC} and C_F). If a high input level and a lower gain are applied the filter is not necessary.

If desired, MICNx via C_K can also be connected to the inverse output of the AC source instead of connecting it to the reference potential for differential line input.

Draft

3.13.3 Loudspeaker Circuit

The GSM module comprises two analog speaker outputs: EP1 and EP2. Output EP1 is able to drive a load of 8Ohms while the output EP2 can drive a load of 32Ohms. Each interface can be connected in differential and in single ended configuration. See examples in Figure 21 and Figure 22.

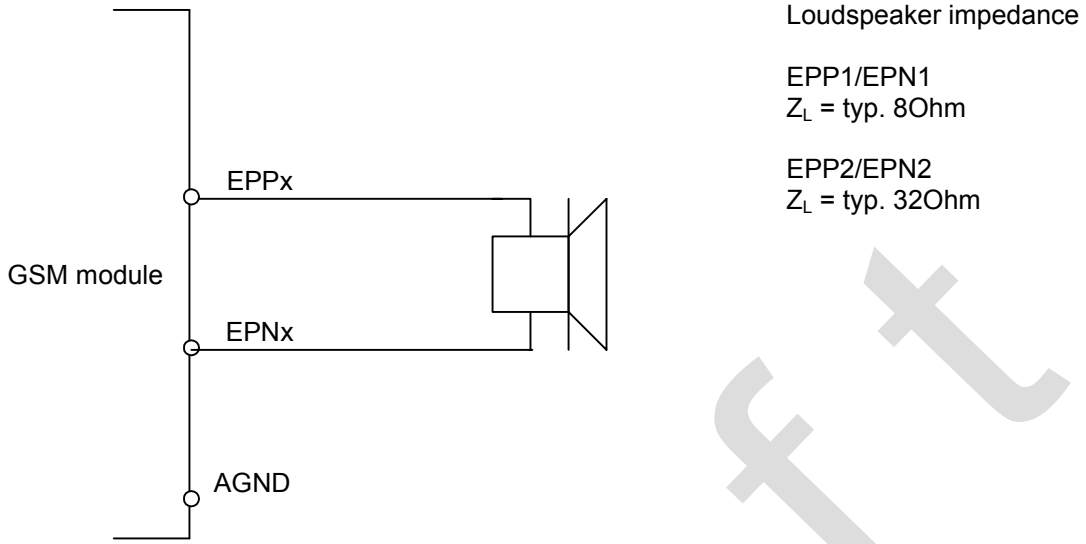

Figure 21: Differential loudspeaker configuration

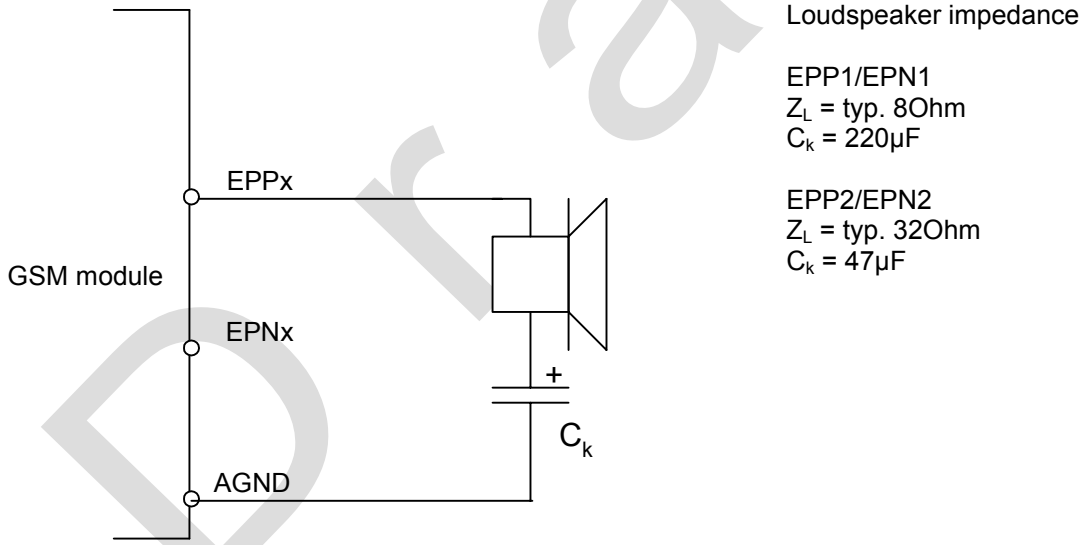

Figure 22: Single ended loudspeaker configuration

Draft

3.13.4 Digital Audio Interface DAI

TBD

Draft

3.14 Control Signals

3.14.1 Synchronization Signal

The synchronization signal serves to indicate growing power consumption during the transmit burst. The signal is generated by the SYNC pin (pin number 32). Please note that this pin can adopt three different operating modes which you can select by using the AT^SSYNC command: the mode AT^SSYNC=0 described below, and the two LED modes AT^SSYNC=1 or AT^SSYNC=2 described in [1] and Section 3.14.2.

The first function (factory default AT^SSYNC=0) is recommended if you want your application to use the synchronization signal for better power supply control. Your platform design must be such that the incoming signal accommodates sufficient power supply to the TC65 module if required. This can be achieved by lowering the current drawn from other components installed in your application.

The timing of the synchronization signal is shown below. High level of the SYNC pin indicates increased power consumption during transmission.

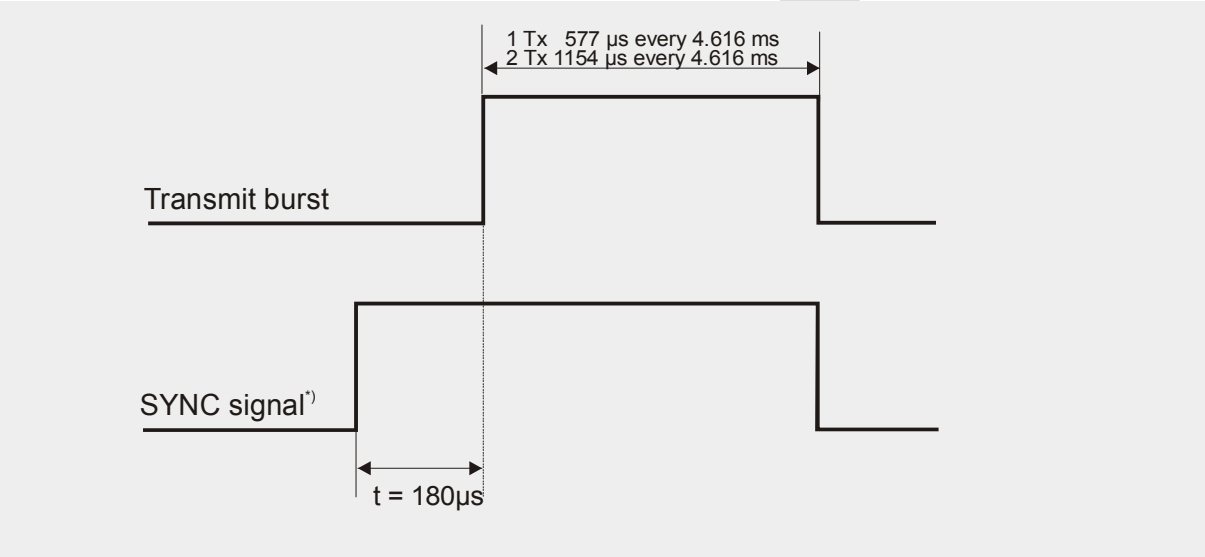

Figure 25: SYNC signal during transmit burst

*) The duration of the SYNC signal is always equal, no matter whether the traffic or the access burst are active.

3.14.2 Using the SYNC Pin to Control a Status LED

As an alternative to generating the synchronization signal, the SYNC pin can be configured to drive a status LED that indicates different operating modes of the TC65 module. To take advantage of this function the LED mode must be activated with the AT^SSYNC command and the LED must be connected to the host application. The connected LED can be operated in two different display modes (AT^SSYNC=1 or AT^SSYNC=2). For details please refer to [1].

Especially in the development and test phase of an application, system integrators are advised to use the LED mode of the SYNC pin in order to evaluate their product design and identify the source of errors.

To operate the LED a buffer, e.g. a transistor or gate, must be included in your application. A sample circuit is shown in Figure 26. Power consumption in the LED mode is the same as for the synchronization signal mode. For details see Table 17, SYNC pin.

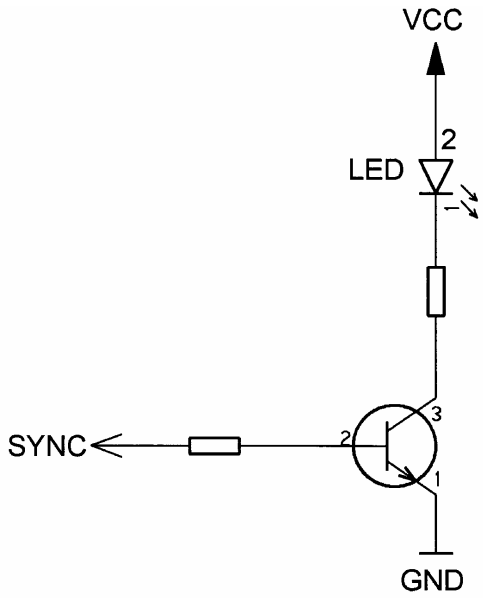

Figure 26: LED Circuit (Example)

Draft

4 Antenna Interface

The RF interface has an impedance of 50Ω. TC65 is capable of sustaining a total mismatch at the antenna connector or pad without any damage, even when transmitting at maximum RF power.

The external antenna must be matched properly to achieve best performance regarding radiated power, DC-power consumption, modulation accuracy and harmonic suppression. Antenna matching networks are not included on the TC65 PCB and should be placed in the host application.

Regarding the return loss TC65 provides the following values in the active band:

Table 11: Return loss in the active band

State of module	Return loss of module	Recommended return loss of application
Receive	≥ 8dB	≥ 12dB
Transmit	not applicable	≥ 12dB

The connection of the antenna or other equipment must be decoupled from DC voltage. This is necessary because the antenna connector is DC coupled to ground via an inductor for ESD protection.

4.1 Antenna Installation

To suit the physical design of individual applications TC65 offers two alternative approaches to connecting the antenna:

- Recommended approach: U.FL-R-SMT antenna connector from Hirose assembled on the component side of the PCB (top view on TC65). See Section 4.3 for details.
- Antenna pad and grounding plane placed on the bottom side. See Section 4.2.

The U.FL-R-SMT connector has been chosen as antenna reference point (ARP) for the Siemens reference equipment submitted to type approve TC65. All RF data specified throughout this manual are related to the ARP. For compliance with the test results of the Siemens type approval you are advised to give priority to the connector, rather than using the antenna pad.

IMPORTANT: Both solutions can only be applied alternatively. This means, whenever an antenna is plugged to the Hirose connector, the pad must not be used. Vice versa, if the antenna is connected to the pad, then the Hirose connector must be left empty.

Draft

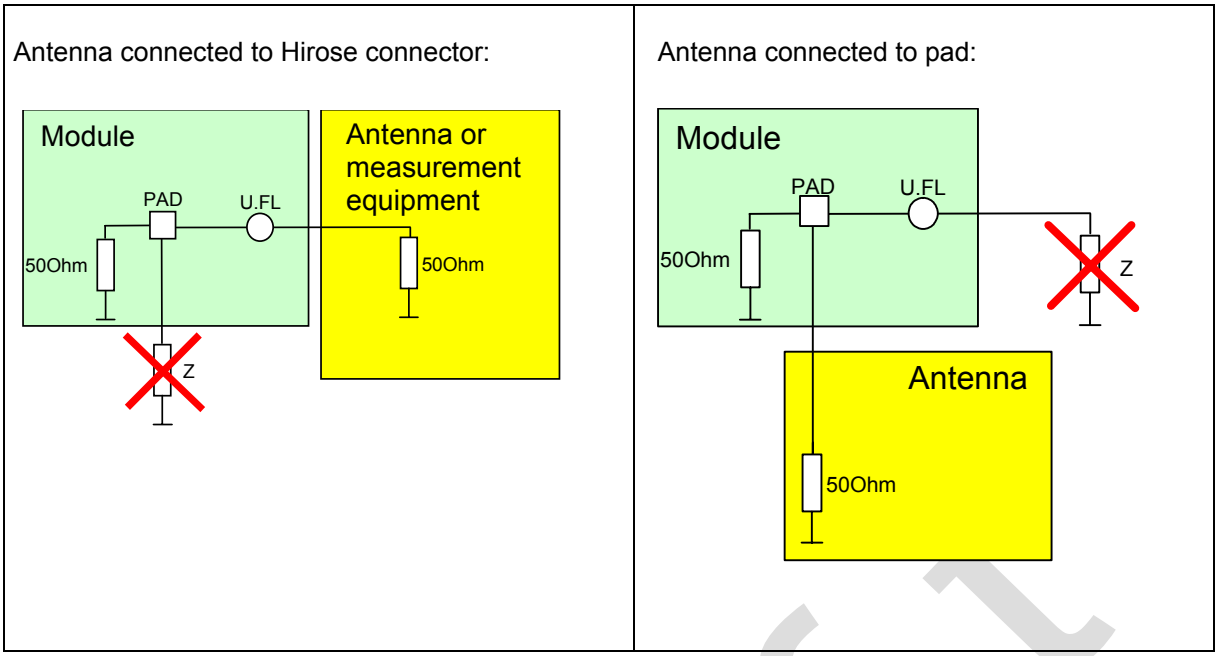

Figure 27: Never use antenna connector and antenna pad at the same time

No matter which option you choose, ensure that the antenna pad does not come into contact with the holding device or any other components of the host application. It needs to be surrounded by a restricted area filled with air, which must also be reserved 0.8mm in height.

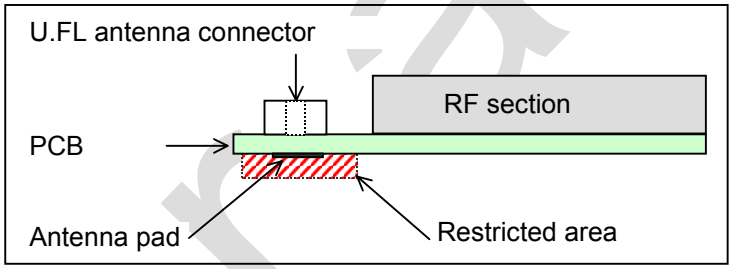

Figure 28: Restricted area around antenna pad

Draft

4.2 Antenna Pad

The antenna can be soldered to the pad, or attached via contact springs. For proper grounding connect the antenna to the ground plane on the bottom of TC65 which must be connected to the ground plane of the application.

When you decide to use the antenna pad take into account that the pad has not been intended as antenna reference point (ARP) for the Siemens TC65 type approval. The antenna pad is provided only as an alternative option which can be used, for example, if the recommended Hirose connection does not fit into your antenna design.

Also, consider that according to the GSM recommendations TS 45.005 and TS 51.010-01 a 50Ω connector is mandatory for type approval measurements. This requires GSM devices with an integral antenna to be temporarily equipped with a suitable connector or a low loss RF cable with adapter.

Notes on soldering:
- To prevent damage to the module and to obtain long-term solder joint properties you are advised to maintain the standards of good engineering practice for soldering.
- Be sure to solder the antenna core to the pad and the shielding of the coax cable to the ground plane of the module next to the antenna pad. The direction of the cable is not relevant from the electrical point of view.

TC65 material properties:

TC65 PCB:	FR4
Antenna pad:	Gold plated pad

4.2.1 Suitable Cable Types

For direct solder attachment, we suggest to use the following cable types:
- RG316/U 50Ohm coaxial cable
- 1671A 50Ohm coaxial cable

Suitable cables are offered, for example, by IMS Connector Systems. For further details and other cable types please contact http://www.imscs.com.

Draft

4.3 Antenna Connector

TC65 uses an ultra-miniature SMT antenna connector supplied from Hirose Ltd. The product name is:

U.FL-R-SMT

The position of the antenna connector on the TC65 board can be seen in Figure 35.

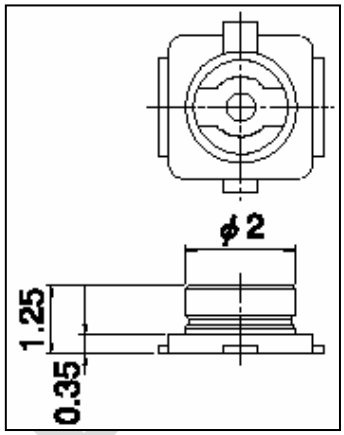

Figure 29: Mechanical dimensions of U.FL-R-SMT connector

Table 12: Product specifications of U.FL-R-SMT connector

Item	Specification	Conditions
Ratings		
Nominal impedance	50Ω	Operating temp:-40°C to + 90°C Operating humidity: max. 90%
Rated frequency	DC to 3GHz	
Mechanical characteristics		
Female contact holding force	0.15N min	Measured with a ∅ 0.475 pin gauge
Repetitive operation	Contact resistance: Center 25mΩ Outside 15mΩ	30 cycles of insertion and disengagement
Vibration	No momentary disconnections of 1µs; No damage, cracks and looseness of parts	Frequency of 10 to 100Hz, single amplitude of 1.5mm, acceleration of 59m/s^2, for 5 cycles in the direction of each of the 3 axes
Shock	No momentary disconnections of 1µs. No damage, cracks and looseness of parts.	Acceleration of 735m/s^2, 11ms duration for 6 cycles in the direction of each of the 3 axes
Environmental characteristics		
Humidity resistance	No damage, cracks and looseness of parts. Insulation resistance: 100MΩ min. at high humidity 500MΩ min. when dry	Exposure to 40°C, humidity of 95% for a total of 96 hours
Temperature cycle	No damage, cracks and looseness of parts. Contact resistance: Center 25mΩ Outside 15mΩ	Temperature: +40°C → 5 to 35°C → +90°C → 5 to 35°C Time: 30min → within 5min → 30min within 5min
Salt spray test	No excessive corrosion	48 hours continuous exposure to 5% salt water

Draft

Table 13: Material and finish of U.FL-R-SMT connector and recommended plugs

Part	Material	Finish
Shell	Phosphor bronze	Silver plating
Male center contact	Brass	Gold plating
Female center contact	Phosphor bronze	Gold plating
Insulator	Plug: PBT Receptacle: LCP	Black Beige

Mating plugs and cables can be chosen from the Hirose U.FL Series. Examples are shown below and listed in Table 14. For latest product information please contact your Hirose dealer or visit the Hirose home page, for example http://www.hirose.com.

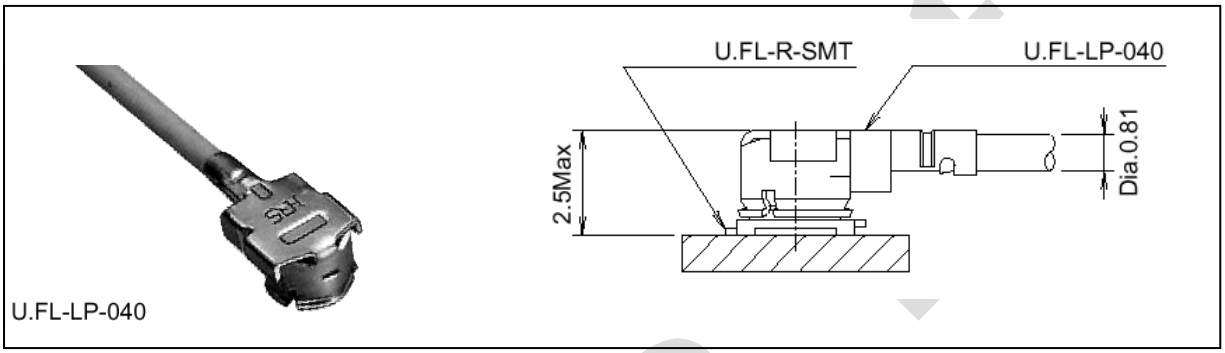

Figure 30: U.FL-R-SMT connector with U.FL-LP-040 plug

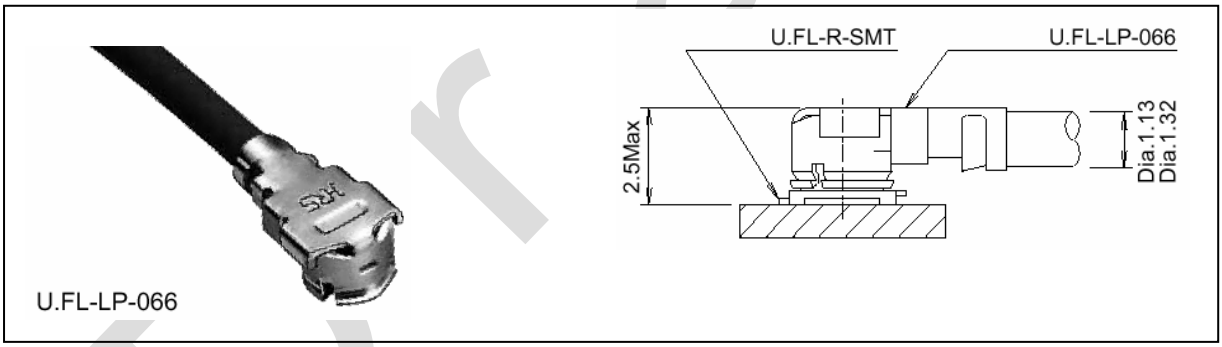

Figure 31: U.FL-R-SMT connector with U.FL-LP-066 plug

Draft

In addition to the connectors illustrated above, the U.FL-LP-(V)-040(01) version is offered as an extremely space saving solution. This plug is intended for use with extra fine cable (up to ∅ 0.81mm) and minimizes the mating height to 2mm. See Figure 32 which shows the Hirose datasheet.

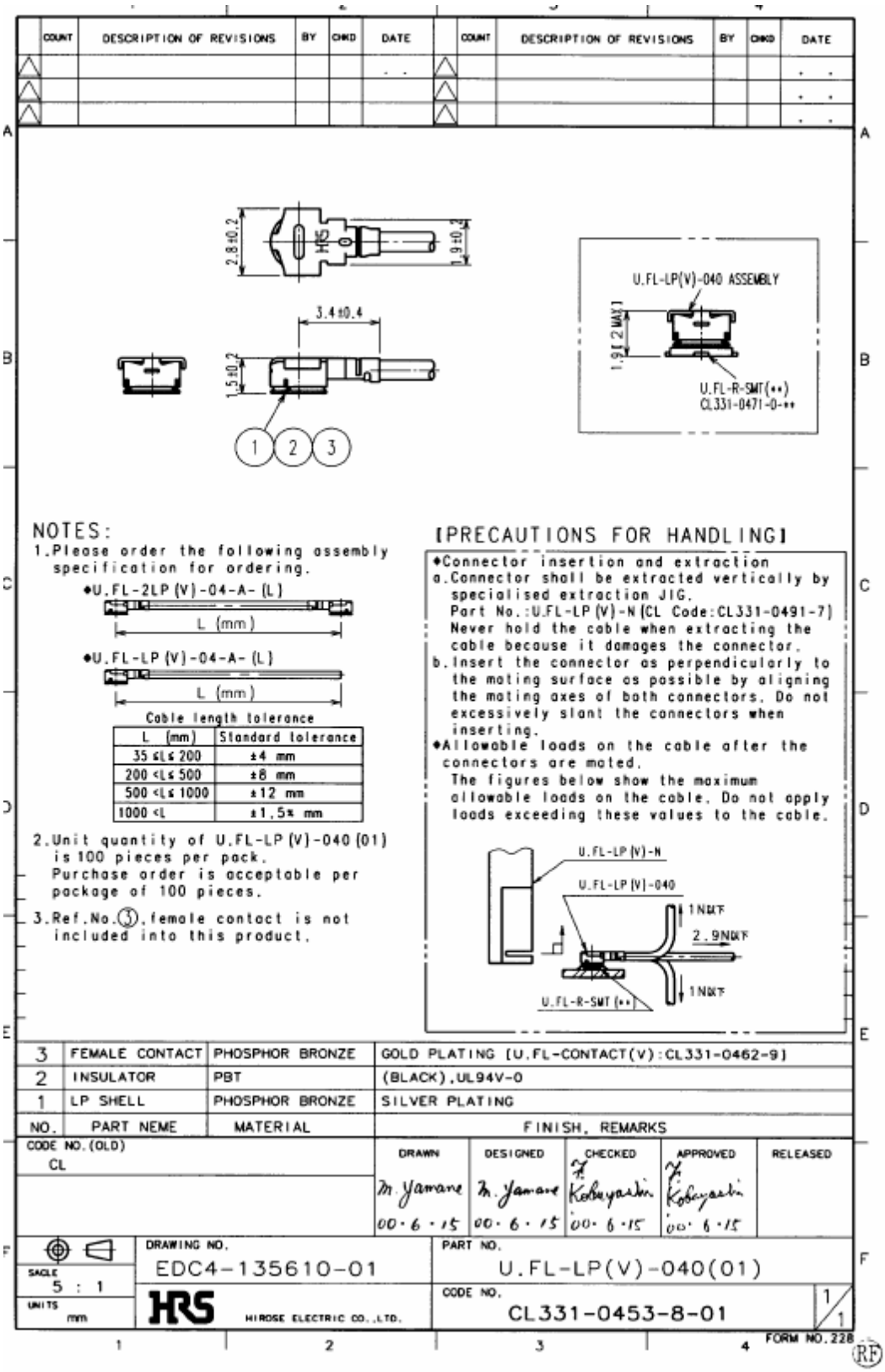

Figure 32: Specifications of U.FL-LP-(V)-040(01) plug

Table 14: Ordering information for Hirose U.FL Series

Item	Part number	HRS number
Connector on TC65	U.FL-R-SMT	CL331-0471-0-10
Right-angle plug shell for ∅ 0.81mm cable	U.FL-LP-040	CL331-0451-2
Right-angle plug for ∅ 0.81mm cable	U.FL-LP(V)-040 (01)	CL331-053-8-01
Right-angle plug for ∅ 1.13mm cable	U.FL-LP-068	CL331-0452-5
Right-angle plug for ∅ 1.32mm cable	U.FL-LP-066	CL331-0452-5
Extraction jig	E.FL-LP-N	CL331-04441-9

Draft

5 Electrical, Reliability and Radio Characteristics

5.1 Absolute Maximum Ratings

The absolute maximum ratings stated in Table 15 are stress ratings under non-operating conditions. Stresses beyond any of these limits will cause permanent damage to TC65.

Table 15: Absolute maximum ratings under non-operating conditions

Parameter	Min	Max	Unit
Supply voltage BATT+	-0.3	5.5	V
Voltage at digital pins	-0.3	3.05	V
Voltage at analog pins	-0.3	3.0	V
Voltage at VCHARGE pin	-0.3	5.5	V
Voltage at CHARGEGATE pin	-0.3	5.5	V
VUSB_IN	-0.3	5.5	V
VSENSE		5.5	V
ISENSE		5.5	V

5.2 Operating Temperatures

Test conditions were specified in accordance with IEC 60068-2 (still air). The values stated below are in compliance with GSM recommendation TS 51.010-01.

Table 16: Operating temperatures

Parameter	Min	Typ	Max	Unit
Ambient temperature (according to GSM 11.10)	-30	+25	+65*)	°C
Automatic shutdown TC65 board temperature Battery temperature	 -30 -20	 --- ---	 +90*) +60	°C
Ambient temperature for charging (software controlled fast charging)	0	---	+45	°C

Due to temperature measurement uncertainty, a tolerance on these switching off thresholds may occur. The possible deviation is in a range of:

- ± 3°C at the overtemperature limit
- ± 5°C at the undertemperature limit

*) On TC65 the automatic overtemperature shutdown threshold is set to 90°C board temperature. This prevents permanent damage to components on the board. Consider the ratio of output power, supply voltage and operating temperature: to achieve $T_{amb\ max}$ = 65°C in GPRS Class 8 (GSM900/ GSM850) with 2W RF power the supply voltage must not be higher than 4.2V.

Draft

5.3 Pin Assignment and Signal Description

The Molex board-to-board connector on TC65 is an 80-pin double-row receptacle. The names and the positions of the pins can be seen from Figure 1 which shows the top view of TC65.

1	GND	GND	80
2	ADC1_IN	DAC_OUT	79
3	ADC2_IN	PWR_IND	78
4	GND	*Do not use*	77
5	GPIO10	GPIO9	76
6	GPIO8	SPICS	75
7	SPIDI	GPIO4	74
8	GPIO7	GPIO3	73
9	GPIO6	GPIO2	72
10	GPIO5	GPIO1	71
11	I2CCLK_SPICLK	I2CDAT_SPIDO	70
12	VUSB_IN	USB_DP	69
13	DAI5	USB_DN	68
14	ISENSE	VSENSE	67
15	DAI6	VMIC	66
16	CCCLK	EPN2	65
17	CCVCC	EPP2	64
18	CCIO	EPP1	63
19	CCRST	EPN1	62
20	CCIN	MICN2	61
21	CCGND	MICP2	60
22	DAI4	MICP1	59
23	DAI3	MICN1	58
24	DAI2	AGND	57
25	DAI1	IGT	56
26	DAI0	EMERG_RST	55
27	BATT_TEMP	DCD0	54
28	SYNC	CTS1	53
29	RXD1	CTS0	52
30	RXD0	RTS1	51
31	TXD1	DTR0	50
32	TXD0	RTS0	49
33	VDDLP	DSR0	48
34	VCHARGE	RING0	47
35	CHARGEGATE	VEXT	46
36	GND	BATT+	45
37	GND	BATT+	44
38	GND	BATT+	43
39	GND	BATT+	42
40	GND	BATT+	41

Figure 33: Pin assignment (component side of TC65)

Please note that the reference voltages listed in Table 17 are the values measured directly on the TC65 module. They do not apply to the accessories connected.

Table 17: Signal description

Function	Signal name	IO	Signal form and level	Comment
Power supply	BATT+	I	$V_I$max = 4.5V $V_I$typ = 3.8V $V_I$min = 3.2V during Tx burst on board I ≈ 2A, during Tx burst 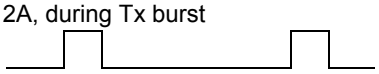 n Tx = n x 577µs peak current every 4.616ms	Five pins of BATT+ and GND must be connected in parallel for supply purposes because higher peak currents may occur. Minimum voltage must not fall below 3.2V including drop, ripple, spikes.
Power supply	GND		Ground	Application Ground
Charge Interface	VCHARGE	I	$V_I$min = 1.015 * V_{BATT+} $V_I$max = 5.45V	This line signalizes to the processor that the charger is connected. If unused keep pin open.
	BATT_TEMP	I	Connect NTC with R_{NTC} ≈ 10kΩ @ 25°C to ground. See Section 3.5.3 for B value of NTC.	Battery temperature measurement via NTC resistance. NTC should be installed inside or near battery pack to enable proper charging and deliver temperature values. If unused keep pin open.
	ISENSE	I	$V_I$max = 4.65V ΔV_Imax to V_{BATT+} = +0.3V at normal condition	ISENSE is required for measuring the charge current. For this purpose, a shunt resistor for current measurement needs to be connected between ISENSE and VSENSE. If unused connect pin to VSENSE.
	VSENSE	I	$V_I$max = 4.5V	VSENSE must be directly connected to BATT+ at battery connector or external power supply.
	CHARGEGATE	O	$V_O$max = 5.5V $I_O$max = 1mA	Control line to the gate of charge FET If unused keep pin open.
External supply voltage	VEXT	O	Normal mode: $V_O$min = 2.75V $V_O$typ = 2.93V $V_O$max = 3.05V $I_O$max = -50mA	VEXT may be used for application circuits, for example to supply power for an I2C If unused keep pin open. Not available in Power-down mode. The external digital logic must not cause any spikes or glitches on voltage VEXT.

Draft

Function	Signal name	IO	Signal form and level	Comment
Power indicator	PWR_IND	O	V_{IH}max = 10V V_{OL}max = 0.4V at Imax = 2mA	PWR_IND (Power Indicator) notifies the module's on/off state. PWR_IND is an open collector that needs to be connected to an external pull-up resistor. Low state of the open collector indicates that the module is on. Vice versa, high level notifies the Power-down mode. Therefore, the pin may be used to enable external voltage regulators which supply an external logic for communication with the module, e.g. level converters.
Ignition	IGT	I	$R_I \approx 30k\Omega$, $C_I \approx 10nF$ V_{IL}max = 0.8V at Imax = -150µA V_{OH}max = 4.5V (V_{BATT+}) ON ~~~|____|~~~ Active Low ≥ 400ms	This signal switches the mobile on. This line must be driven low by an open drain or open collector driver.
Emergency reset	EMERG_RST	I	$R_I \approx 5k\Omega$ V_{IL}max = 0.2V at Imax = -0.5mA V_{OH}min = 1.75V V_{OH}max = 3.05V Signal ~~~|_____|~~~ Pull down ≥ 10ms Falling edge resets module.	Reset function in case of emergency: Pull down and release EMERG_RST. Falling edge will reset the module. Data stored in the volatile memory will be lost. For orderly software controlled reset rather use the AT+CFUN command (e.g. AT+CFUN=,1). This line must be driven by open drain or open collector. If unused keep pin open.
Synchroni-zation	SYNC	O	V_{OL}max = 0.3V at I = 0.1mA V_{OH}min = 2.3V at I = -0.1mA V_{OH}max = 0.05V n Tx = n x 577µs impulse each 4.616ms, with ___µs forward time.	There are two alternative options for using the SYNC pin: a) Indicating increased current consumption during uplink transmission burst. Note that the timing of the signal is different during handover. b) Driving a status LED to indicate different operating modes of TC65. The LED must be installed in the host application. If unused keep pin open.
RTC backup	VDDLP	I/O	$R_I \approx 1k\Omega$ $V_O$max = 4.5V V_{BATT+} = 4.3V: V_O = 3.2V at I_O = -500µA V_{BATT+} = 0V: V_I = 2.7V…4.5V at I_{max} = 15µA	If unused keep pin open.

Draft

Function	Signal name	IO	Signal form and level	Comment
SIM interface specified for use with 3V SIM card	CCIN	I	$R_I \approx 100k\Omega$ V_{IL}max = 0.6V at I = -25µA V_{IH}min = 2.1V at I = -10µA $V_O$max = 3.05V	CCIN = Low, SIM card holder closed
	CCRST	O	$R_O \approx 47\Omega$ V_{OL}max = 0.25V at I = +1mA V_{OH}min = 2.5V at I = -0.5mA V_{OH}max = 2.95V	Maximum cable length or copper track 100mm to SIM card holder.
	CCIO	I/O	$R_I \approx 4.7k\Omega$ V_{IL}max = 0.75V V_{IL}min = -0.3V V_{IH}min = 2.1V V_{IH}max = CCVCCmin + 0.3V = 3.05V $R_O \approx 100\Omega$ V_{OL}max = 0.3V at I = +1mA V_{OH}min = 2.5V at I = -0.5mA V_{OH}max = 2.95V	All signals of SIM interface are protected against ESD with a special diode array. Usage of CCGND is mandatory.
	CCCLK	O	$R_O \approx 100\Omega$ V_{OL}max = 0.3V at I = +1mA V_{OH}min = 2.5V at I = -0.5mA V_{OH}max = 2.95V	
	CCVCC	O	$V_O$min = 2.75V $V_O$typ = 2.85V $V_O$max = 2.95V $I_O$max = -20mA	
	CCGND		Ground	
SIM interface specified for use with 1.8V SIM card	CCIN	I	$R_I \approx 100k\Omega$ V_{IL}max = 0.6V at I = -25µA V_{IH}min = 2.1V at I = -10µA $V_O$max = 3.05V	CCIN = Low, SIM card holder closed
	CCRST	O	$R_O \approx 47\Omega$ V_{OL}max = 0.25V at I = +1mA V_{OH}min = 1.45V at I = -0.5mA V_{OH}max = 1.90V	Maximum cable length or copper track 100mm to SIM card holder.
	CCIO	I/O	$R_I \approx 4.7k\Omega$ V_{IL}max = 0.45V V_{IH}min = 1.35V V_{IH}max = CCVCCmin + 0.3V = 2.00V $R_O \approx 100\Omega$ V_{OL}max = 0.3V at I = +1mA V_{OH}min = 1.45V at I = -0.5mA V_{OH}max = 1.90V	All signals of SIM interface are protected against ESD with a special diode array. Usage of CCGND is mandatory.
	CCCLK	O	$R_O \approx 100\Omega$ V_{OL}max = 0.3V at I = +1mA V_{OH}min = 1.45V at I = -0.5mA V_{OH}max = 1.90V	
	CCVCC	O	$V_O$min = 1.70V, $V_O$typ = 1.80V $V_O$max = 1.90V $I_O$max = -20mA	
	CCGND		Ground	
ASC0 Serial interface	RXD0 TXD0 CTS0 RTS0 DTR0 DCD0 DSR0 RING0	O I O I I O O O	V_{OL}max = 0.2V at I = 2mA V_{OH}min = 2.55V at I = -0.5mA V_{OH}max = 3.05V V_{IL}max = 0.8V V_{IH}min = 2.0V V_{IH}max = VEXTmin + 0.3V = 3.05V	Serial interface for AT commands or data stream. If lines are unused keep pins open.

Draft

Function	Signal name	IO	Signal form and level	Comment
ASC1 Serial interface	RXD1 TXD1 CTS1 RTS1	O I O I	V_{OL}max = 0.2V at I = 2mA V_{OH}min = 2.55V at I = -0.5mA V_{OH}max = 3.05V V_{IL}max = 0.8V V_{IH}min = 2.0V V_{IH}max = VEXTmin + 0.3V = 3.05V	Serial interface for AT commands or data stream. If lines are unused keep pins open.
I^2C interface	I2CCLK _SPICLK	O	V_{OL}max = 0.2V at I = 2mA V_{OH}min = 2.55V at I = -0.5mA V_{OH}max = 3.05V	I^2C interface is only available if the two pins are not used as SPI interface. I2CDAT is configured as Open Drain and needs a pull-up resistor in the host application. According to the I2C Bus Specification Version 2.1 for the fast mode a rise time of max. 300ns is permitted. There is also a maximum V_{OL}=0.4V at 3mA specified. The value of the pull-up depends on the capacitive load of the whole system (I2C Slave + lines). The maximum sink current of I2CDAT and I2CCLK is 4mA. If lines are unused keep pins open.
	I2CDAT_SPIDO	I/O	V_{OL}max = 0.2V at I = 2mA V_{IL}max = 0.8V V_{IH}min = 2.0V V_{IH}max = VEXTmin + 0.3V = 3.05V	
SPI Serial Peripheral Interface	SPIDI I2CDAT_SPIDO I2CCLK_SPICLK SPICS	I O O O	V_{OL}max = 0.2V at I = 2mA V_{OH}min = 2.55V at I = -0.5mA V_{OH}max = 3.05V V_{IL}max = 0.8V V_{IH}min = 2.0V, V_{IH}max = VEXTmin + 0.3V = 3.05V	If the Serial Peripheral Interface is active the I^2C interface is not available. If lines are unused keep pins open.
USB	VUSB_IN	I	V_{IN}min = 4.0V V_{IN}max = 5.25V	If lines are unused keep pins open.
	USB_DN	I/O	Differential Output Crossover voltage Range V_{CRS}min = 1.5V, V_{CRS}max = 2.0V Driver Output Resistance Z_{DRV}typ = 32Ohm	
	USB_DP	I/O		
General Purpose Input/Output	GPIO1	I/O	V_{OL}max = 0.2V at I = 2mA V_{OH}min = 2.55V at I = -0.5mA V_{OH}max = 3.05V V_{IL}max = 0.8V V_{IH}min = 2.0V, V_{IH}max = VEXTmin + 0.3V = 3.05V	If unused keep pins with a pull up or pull down resistor while the GPIO is set to input.
	GPIO2	I/O		
	GPIO3	I/O		
	GPIO4	I/O		
	GPIO5	I/O		
	GPIO6	I/O		
	GPIO7	I/O		
	GPIO8	I/O		
	GPIO9	I/O		
	GPIO10	I/O		

Draft

Function	Signal name	IO	Signal form and level	Comment
Analog Digital Converter	ADC_IN1	I	Input voltage: $V_I$min = 0V, $V_I$max = 2.4V Ri ≈ 450kOhm $f_C$max < 3kHz Sensitivity, accuracy: 12 Bit 1 Bit = 0.585mV	Inputs used for measuring external voltages. ADC_IN1 and ADC_IN2 are internally multiplexed through analog switch.
	ADC_IN2	I		
Digital Analog Converter	DAC_OUT	O	V_{OL}max = 0.2V at I = 2mA V_{OH}min = 2.55V at I = -0.5mA V_{OH}max = 3.05V	PWM signal which can be smoothed by an external filter.
Digital Audio interface	DAI0	O	V_{OL}max = 0.2V at I = 2mA V_{OH}min = 2.55V at I = -0.5mA V_{OH}max = 3.05V V_{IL}max = 0.8V V_{IH}min = 2.0V V_{IH}max = VEXTmin + 0.3V = 3.05V	See Table 10 for details. If unused keep pins open.
	DAI1	I		
	DAI2	O		
	DAI3	I		
	DAI4	I		
	DAI5	I		
	DAI6	O		
Analog Audio interface	VMIC	O	$V_O$min = 2.4V $V_O$typ = 2.5V $V_O$max = 2.6V I_{max} = 2mA	Microphone supply for customer feeding circuits
	EPP2	O	1.0954Vpp (differential) typical 3.4Vpp differential maximal Audio mode TBD Measurement conditions TBD Minimum differential resp. single ended load 27Ohms	The audio output can directly operate a 32-Ohm-loudspeaker. If unused keep pins open.
	EPN2	O		
	EPP1	O	1.0954Vpp (differential) typical 6.0Vp-p differential maximal Audio mode TBD Measurement conditions TBD Minimum differential resp. single ended load 7.5Ohms	The audio output can directly operate an 8-Ohm-loudspeaker. If unused keep pins open.
	EPN1	O		
	MICP1	I	Full Scale Input Voltage 1.578Vpp 0dBm0 Input Voltage 1.0954Vpp At MICNx, apply external bias from 1.0V to 1.6V. Audio mode TBD Measurement conditions TBD	Balanced or single ended microphone or line inputs with external feeding circuit (using VMIC and AGND). If unused keep pins open.
	MICN1	I		
	MICP2	I		
	MICN2	I		
	AGND		Analog Ground	GND level for external audio circuits

Draft

5.4 Power Supply Ratings

Table 18: Power supply ratings

Parameter	Description	Conditions	Min	Typ	Max	Unit
BATT+	Supply voltage	Directly measured at reference point TP BATT+ and TP GND, see chapter 3.2.2 Voltage must stay within the min/max values, including voltage drop, ripple, spikes.	3.2	3.8	4.5	V
	Voltage drop during transmit burst	Normal condition, power control level for $P_{out\ max}$			400	mV
	Voltage ripple	Normal condition, power control level for $P_{out\ max}$ @ f<200kHz @ f>200kHz			 50 2	 mV mV
I_{VDDLP}	OFF State supply current	RTC Backup @ BATT+ = 0V		25		µA
I_{BATT+}		POWER DOWN mode[1)]		50	100	µA
	Average standby supply current[2)]	SLEEP mode @ DRX = 9		TBD		mA
		SLEEP mode @ DRX = 5		TBD		mA
		SLEEP mode @ DRX = 2		TBD		mA
		IDLE mode @ DRX = 2		TBD		mA

1) Measured after module INIT (switch ON the module and following switch OFF); applied voltage on BATT+ (w/o INIT) show increased POWER DOWN supply current.

2) Additional conditions:
SLEEP measurements started 3 minutes after switch ON the module
Averaging times: SLEEP mode - 3 minutes; IDLE mode - 1.5 minutes
Communication tester settings: no neighbor cells, no cell reselection
USB interface disabled

Draft

Table 19: Current consumption during transmit burst

Mode	**GSM call**	**GPRS Class 8**	**GPRS Class10**		**GPRS Class 12**	
Timeslot configuration	1Tx / 1Rx	1Tx / 4Rx	2Tx / 3Rx		4Tx / 1Rx	
Frequency*)	850/900MHz					
Maximum possible power (RF power nominal)	2W (33dBm)	2W (33dBm)	2W (33dBm)	1W (30dBm)	1W (30dBm)	0.5W (27dBm)
Radio/output power reduction with command AT^SCFG, parameter *<ropr>*	*<ropr>* = 1 .. 3	*<ropr>* = 1 .. 3	*<ropr>* = 1	*<ropr>* = 2 or 3	*<ropr>* = 1	*<ropr>* = 2 or 3
Current characteristics	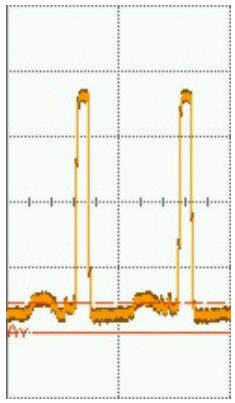	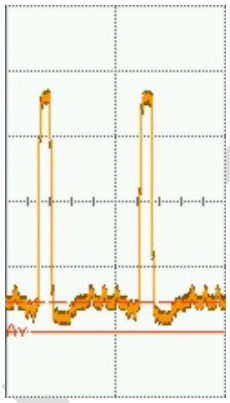	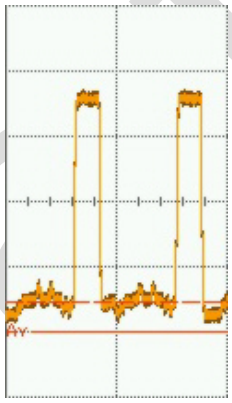	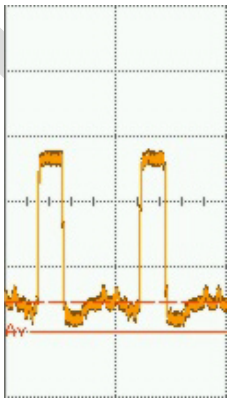	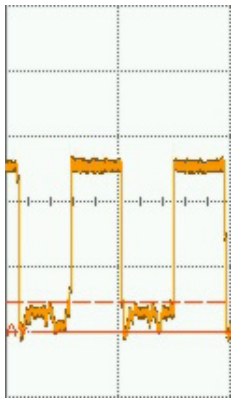	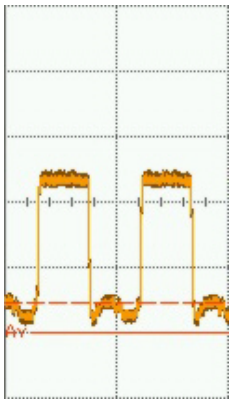
Burst current @ 50Ω antenna (typ.)	2.0A	2.0A	2.0A	1.5A	1.5A	1.3A
Burst current @ total mismatch	3.2A	3.2A	3.2A	2.3A	2.3A	1.9A
Average current @ 50Ω antenna (typ.)	335mA	385mA	610mA	485mA	810mA	710mA
Average current @ total mismatch	485mA	535mA	910mA	685mA	1210mA	1010mA

*) Currents in the frequency bands GSM 1800MHz and GSM 1900MHz are lower due to lower RF output levels.
AT parameters are given in brackets <...> and marked *italic*.

Draft

5.5 Electrostatic Discharge

The GSM engine is not protected against Electrostatic Discharge (ESD) in general. Consequently, it is subject to ESD handling precautions that typically apply to ESD sensitive components. Proper ESD handling and packaging procedures must be applied throughout the processing, handling and operation of any application that incorporates a TC65 module.

Special ESD protection provided on TC65:
Antenna interface: one spark discharge line (spark gap)
SIM interface: clamp diodes for protection against overvoltage.
The remaining ports of TC65 are not accessible to the user of the final product (since they are installed within the device) and therefore, are only protected according to the "Human Body Model" requirements.

TC65 has been tested according to the EN 61000-4-2 standard. The measured values can be gathered from the following table.

Table 20: Measured electrostatic values

Specification / Requirements	Contact discharge	Air discharge
ETSI EN 301 489-7		
ESD at SIM port	± 4kV	± 8kV
ESD at antenna port	± 4kV	± 8kV
Human Body Model (Test conditions: 1.5kΩ, 100pF)		
ESD at USB interface	± 1kV	± 1kV
ESD at all other interfaces	± 1kV	± 1kV

Note: Please note that the values may vary with the individual application design. For example, it matters whether or not the application platform is grounded over external devices like a computer or other equipment, such as the Siemens reference application described in Chapter 8.

Draft

5.6 Reliability Characteristics

The test conditions stated below are an extract of the complete test specifications.

Table 21: Summary of reliability test conditions

Type of test	Conditions	Standard
Vibration	Frequency range: 10-20Hz; acceleration: 3.1mm amplitude Frequency range: 20-500Hz; acceleration: 5g Duration: 2h per axis = 10 cycles; 3 axes	DIN IEC 68-2-6
Shock half-sinus	Acceleration: 500g Shock duration: 1msec 1 shock per axis 6 positions (± x, y and z)	DIN IEC 68-2-27
Dry heat	Temperature: +70 ±2°C Test duration: 16h Humidity in the test chamber: < 50%	EN 60068-2-2 Bb ETS 300019-2-7
Temperature change (shock)	Low temperature: -40°C ±2°C High temperature: +85°C ±2°C Changeover time: < 30s (dual chamber system) Test duration: 1h Number of repetitions: 100	DIN IEC 68-2-14 Na ETS 300019-2-7
Damp heat cyclic	High temperature: +55°C ±2°C Low temperature: +25°C ±2°C Humidity: 93% ±3% Number of repetitions: 6 Test duration: 12h + 12h	DIN IEC 68-2-30 Db ETS 300019-2-5
Cold (constant exposure)	Temperature: -40 ±2°C Test duration: 16h	DIN IEC 68-2-1

Draft

6 Mechanics

6.1 Mechanical Dimensions of TC65

Figure 34 shows the top view of TC65 and provides an overview of the board's mechanical dimensions. For further details see Figure 35.

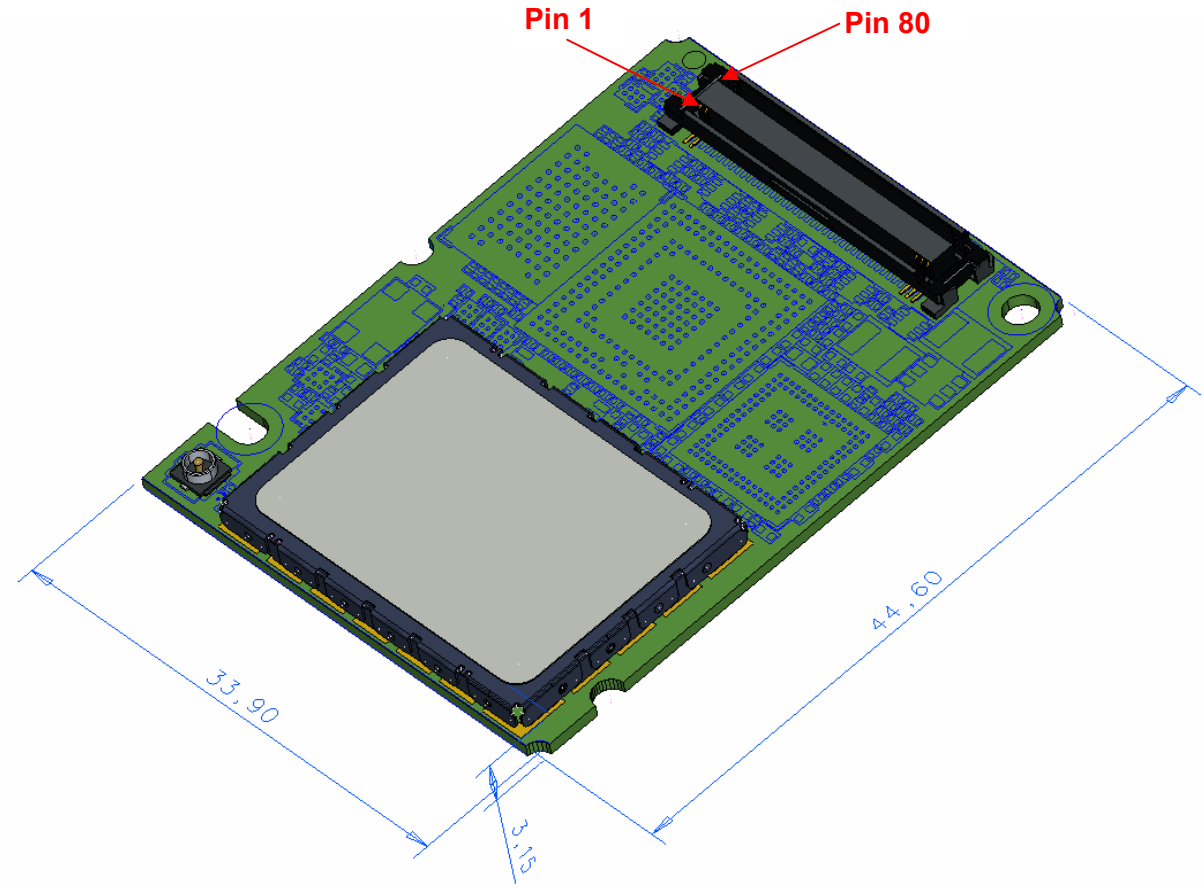

Figure 34: TC65 – top view

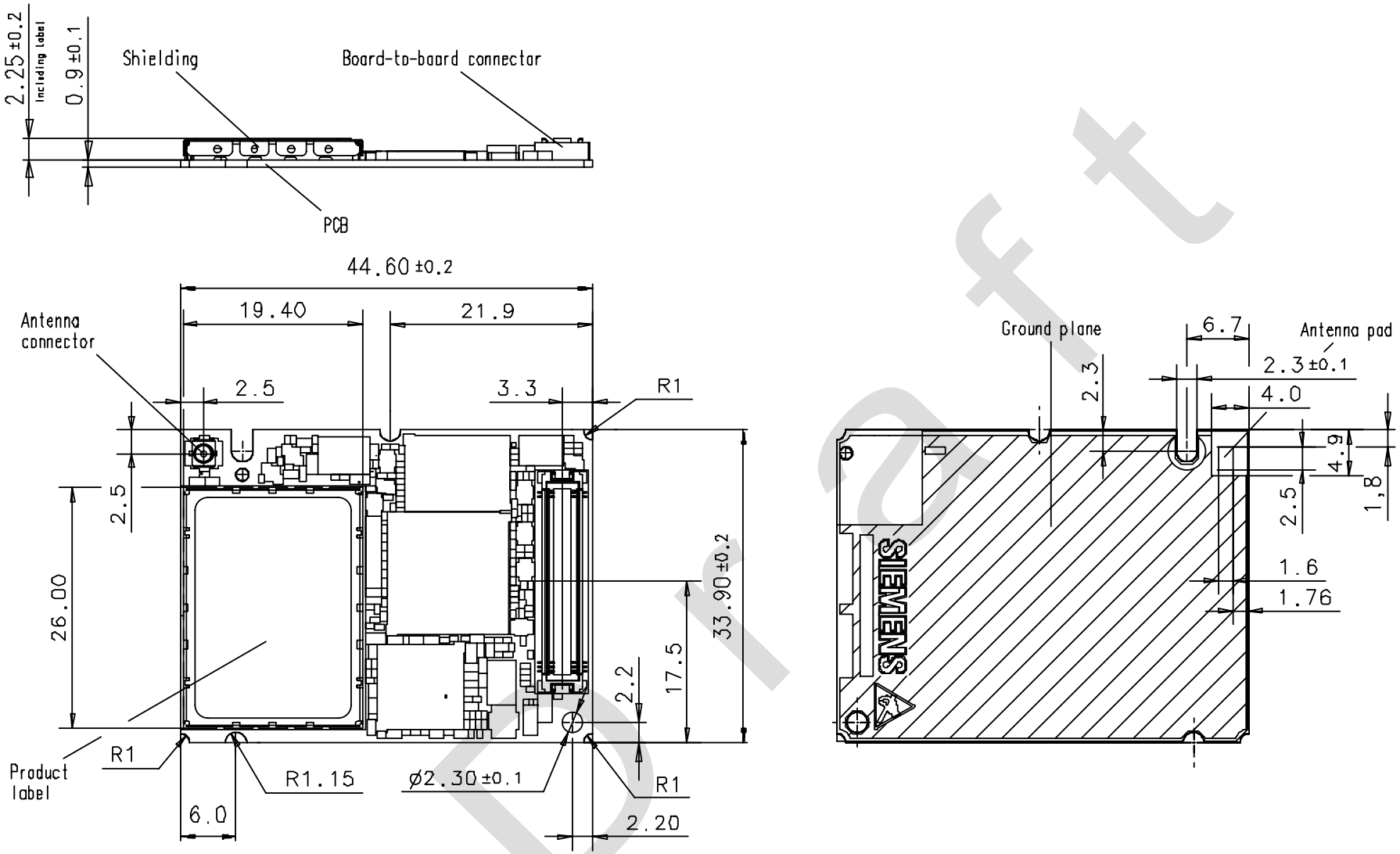

All dimensions in mm

Figure 35: Dimensions of TC65

Draft

6.2 Mounting TC65 to the Application Platform

There are many ways to properly install TC65 in the host device. An efficient approach is to mount the TC65 PCB to a frame, plate, rack or chassis.

Fasteners can be M2 screws plus suitable washers, circuit board spacers, or customized screws, clamps, or brackets. In addition, the board-to-board connection can also be utilized to achieve better support. To help you find appropriate spacers a list of selected screws and distance sleeves for 3mm stacking height can be found in Section 9.2.

When using the two small holes take care that the screws are inserted with the screw head on the bottom of the TC65 PCB. Screws for the large holes can be inserted from top or bottom.

For proper grounding it is strongly recommended to use large ground plane on the bottom of board in addition to the five GND pins of the board-to-board connector. The ground plane may also be used to attach cooling elements, e.g. a heat sink or thermally conductive tape.

To prevent mechanical damage, be careful not to force, bend or twist the module. Be sure it is positioned flat against the host device.

All the information you need to install an antenna is summarized in Chapter 4. Note that the antenna pad on the bottom of the TC65 PCB must not be influenced by any other PCBs, components or by the housing of the host device. It needs to be surrounded by a restricted space as described in Section 4.1.

Draft

6.3 Board-to-Board Application Connector

This section provides the specifications of the 80-pin board-to-board connector used to connect TC65 to the external application.

Connector mounted on the TC65 module:
Type: 52991-0808 SlimStack Receptacle
80 pins, 0.50mm pitch,
for stacking heights from 3.0 to 4.0mm,
see Figure 36 for details.
Supplier: Molex
www.molex.com

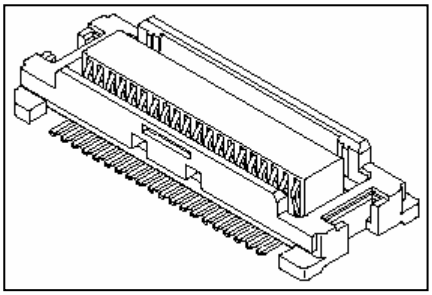

Table 22: Technical specifications of Molex board-to-board connector

Parameter	Specification (80-pin B2B connector)
Electrical	
Number of Contacts	80
Contact spacing	0.5mm (.020")
Voltage	50V
Rated current	0.5A max per contact
Contact resistance	50mΩ max per contact
Insulation resistance	> 100MΩ
Dielectric Withstanding Voltage	500V AC (for 1 minute)
Physical	
Insulator material (housing)	White glass-filled LCP plastic, flammability UL 94V 0
Contact material	Plating: Gold over nickel
Insertion force 1st	< 74.4N
Insertion force 30th	< 65.6N
Withdrawal force 1st	> 10.8N
Maximum connection cycles	30 (@ 70mΩ max per contact)

Mating connector types for the customer's application offered by Molex:

- 53748-0808 SlimStack Plug, 3mm stacking height, see Figure 37 for details.
- 53916-0808 SlimStack Plug, 4mm stacking height

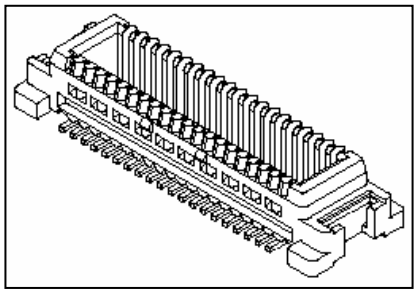

Draft

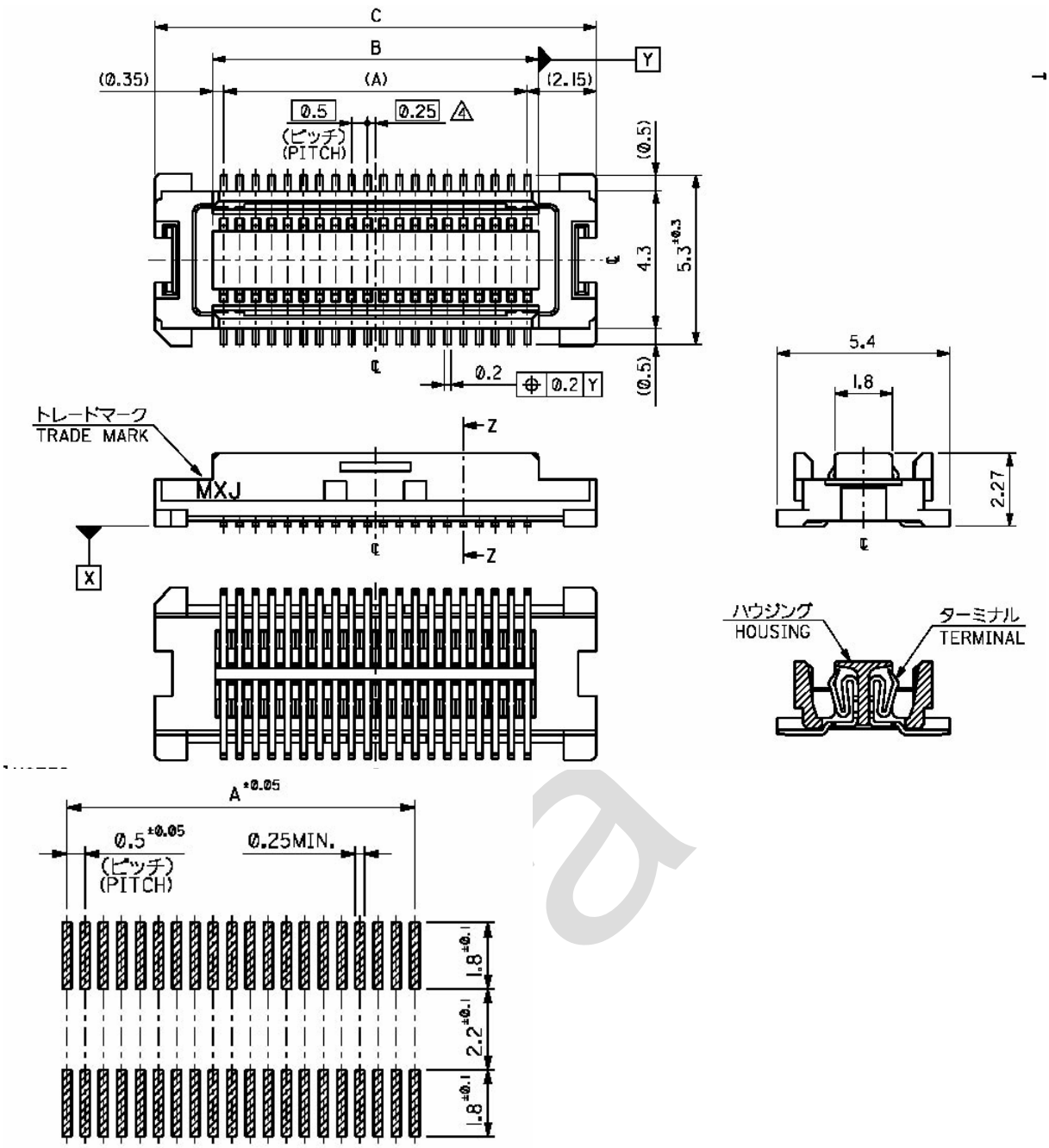

Figure 36: Molex board-to-board connector 52991-0808 on TC65

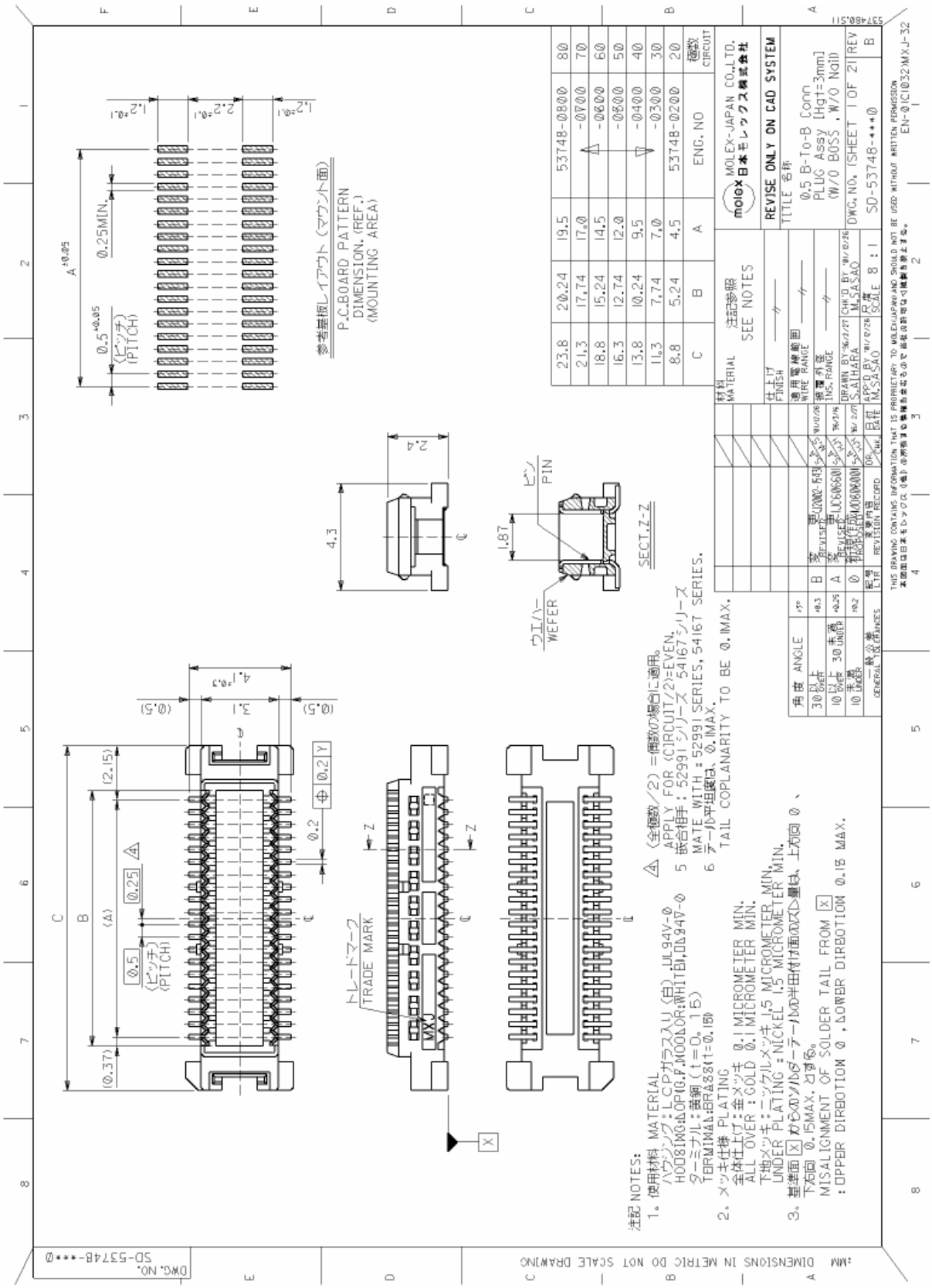

Figure 37: Mating board-to-board connector 53748-0808 on application

7 Sample Application

Figure 38 shows a typical example of how to integrate a TC65 module into the GSM part of a mobile application. Usage of the various host interfaces depends on the desired features of the application.

Audio interface 1 demonstrates the balanced connection of microphone and earpiece. This solution is particularly well suited for internal transducers. Audio interface 2 uses an unbalanced microphone and earpiece connection typically found in headset applications.

The charging circuit is optimized for the charging stages (trickle charging and software controlled charging) as well as the battery and charger specifications described in Section 3.5.

The PWR_IND line is an open collector that needs an external pull-up resistor which connects to the voltage supply of the microcontroller VCC µC. Low state of the open collector pulls the PWR_IND signal low and indicates that the TC65 module is active, high level notifies the Power-down mode.

If the module is in Power-down mode avoid current flowing from any other source into the module circuit, for example reverse current from high state external control lines. Therefore, the controlling application must be designed to prevent reverse or return flow. This is not necessary for the USB interface.

The I2C interface can be powered from an external supply or via the VEXT line of TC65. The advantage of this solution is that when the module enters the Power-down mode, the I2C interface is shut down as well. If you prefer to connect an I2C interface to an external power supply, take care that the interface is shut down when the PWR_IND signal goes high in Power-down mode.

The EMC measures are best practice recommendations. In fact, an adequate EMC strategy for an individual application is very much determined by the overall layout and, especially, the position of components. For example, mounting the internal acoustic transducers directly on the PCB eliminates the need to use the ferrite beads shown in the sample schematic. However, when connecting cables to the module's interfaces it is strongly recommended to add appropriate ferrite beads for reducing RF radiation.

<u>Disclaimer</u>
No warranty, either stated or implied, is provided on the sample schematic diagram shown in Figure 38 and the information detailed in this section. As functionality and compliance with national regulations depend to a great amount on the used electronic components and the individual application layout manufacturers are required to ensure adequate design and operating safeguards for their products using TC65 modules.

Draft

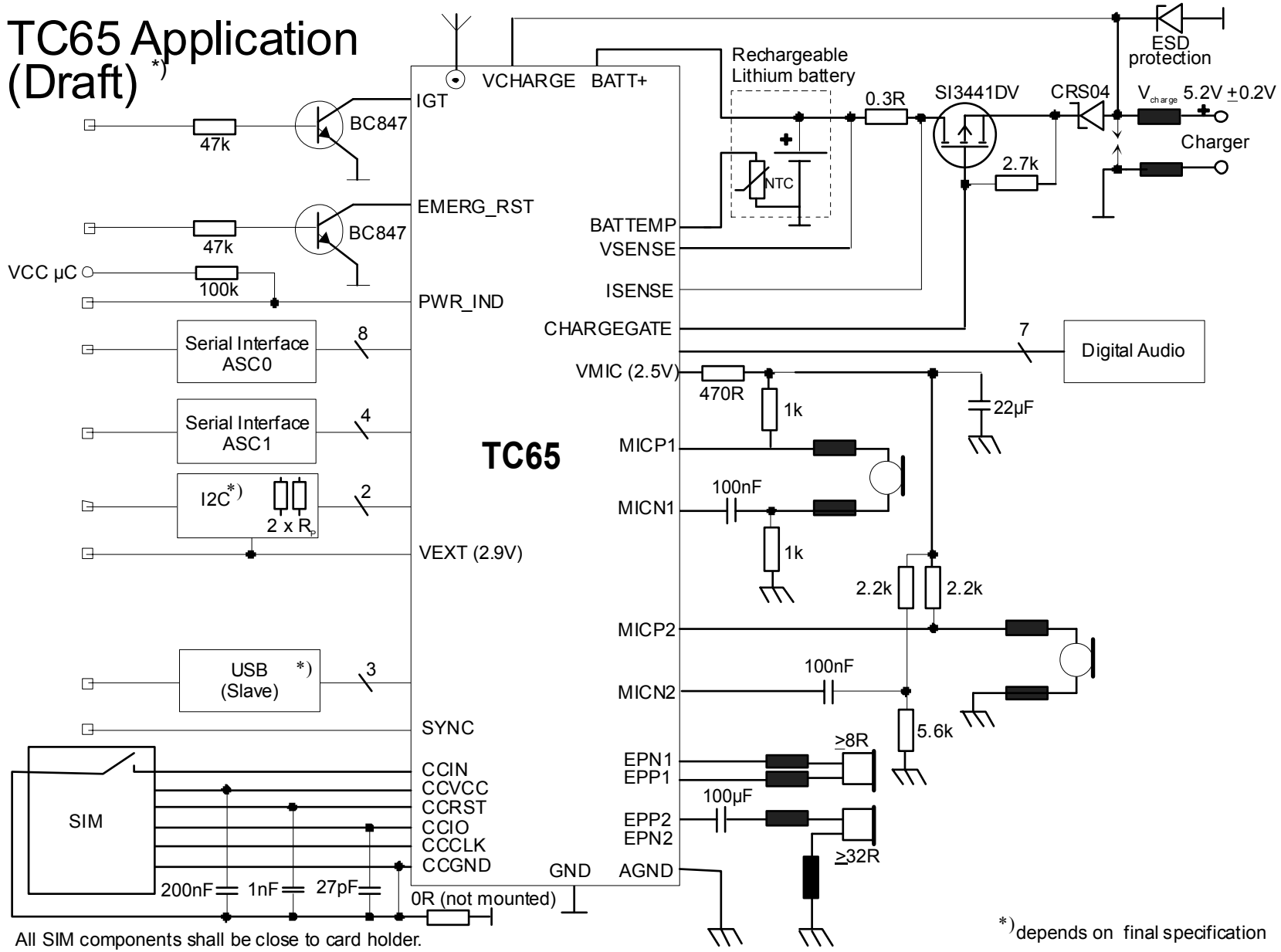

Figure 38: TC65 sample application (draft)

8 Reference Approval

8.1 Reference Equipment for Type Approval

The Siemens reference setup submitted to type approve TC65 consists of the following components:

- Siemens TC65 cellular engine
- Development Support Box DSB75
- SIM card reader integrated on DSB75
- U.FL-R-SMT antenna connector and U.FL-LP antenna cable
- Handset type Votronic HH-SI-30.3/V1.1/0
- Li-Ion battery
- PC as MMI

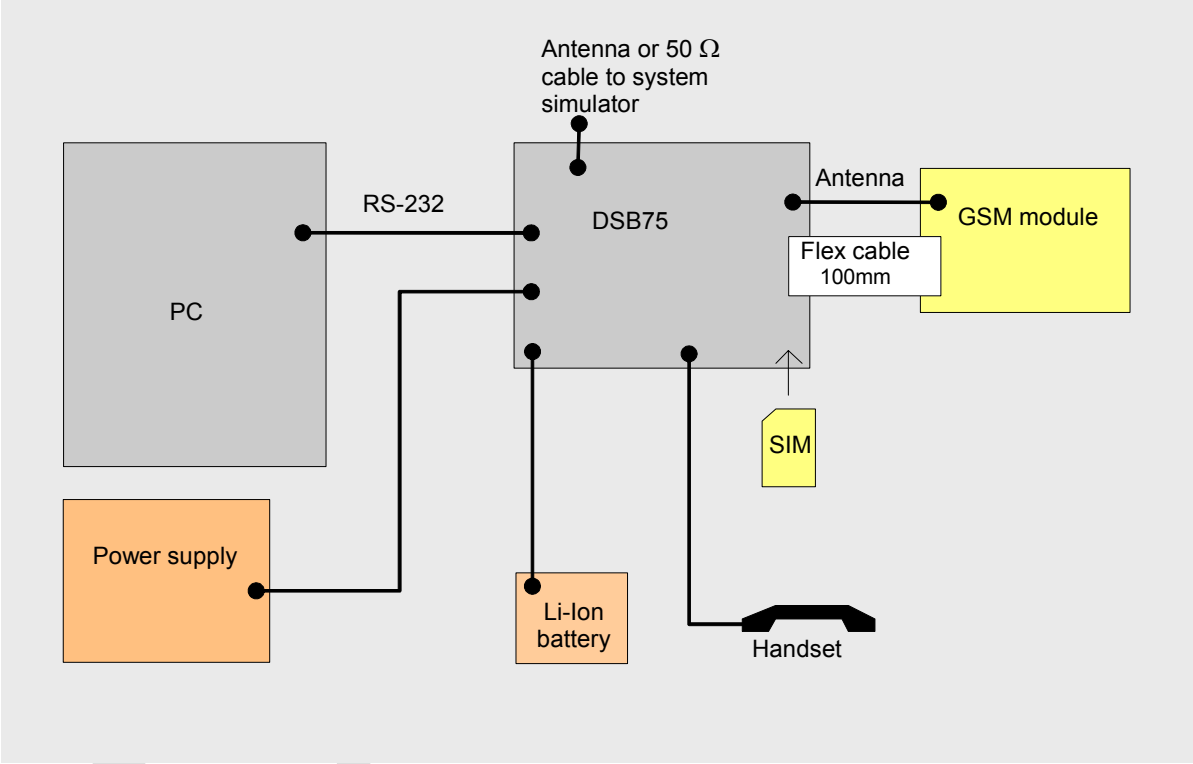

Figure 39: Reference equipment for Type Approval

8.2 Compliance with FCC Rules and Regulations

The FCC Equipment Authorization Certification for the TC65 reference application described in Section 8.1 is listed under the

FCC identifier QIPTC65
IC: 267W-TC65
granted to Siemens AG.

The TC65 reference application registered under the above identifier is certified to be in accordance with the following Rules and Regulations of the Federal Communications Commission (FCC).

Power listed is ERP for Part 22 and EIRP for Part 24
"This device contains GSM and GPRS Class12 functions in the 900 and 1800MHz Band which are not operational in U.S. Territories.
This device is to be used only for mobile and fixed applications. The antenna(s) used for this transmitter must be installed to provide a separation distance of at least 20cm from all persons and must not be co-located or operating in conjunction with any other antenna or transmitter. Users and installers must be provided with antenna installation instructions and transmitter operating conditions for satisfying RF exposure compliance. Antennas used for this OEM module must not exceed 8.4dBi gain (GSM 1900) and 2.9dBi (GSM 850) for mobile and fixed operating configurations. This device is approved as a module to be installed in other devices."

The FCC label of the module must be visible from the outside. If not, the host device is required to bear a second label stating, "Contains FCC ID QIPTC65".

IMPORTANT: Manufacturers of mobile or fixed devices incorporating TC65 modules are advised to

- clarify any regulatory questions,
- have their completed product tested,
- have product approved for FCC compliance, and
- include instructions according to above mentioned RF exposure statements in end product user manual.

Please note that changes or modifications not expressly approved by the party responsible for compliance could void the user's authority to operate the equipment.

Draft

9 Appendix

9.1 List of Parts and Accessories

Table 23: List of parts and accessories

Description	Supplier	Ordering information
TC65	Siemens	Siemens ordering number: L36880-N8355-A100
Siemens Car Kit Portable	Siemens	Siemens ordering number: L36880-N3015-A117
DSB75 Support Box	Siemens	Siemens ordering number: L36880-N8811-A100
Votronic Handset	VOTRONIC	Votronic HH-SI-30.3/V1.1/0 VOTRONIC Entwicklungs- und Produktionsgesellschaft für elektronische Geräte mbH Saarbrücker Str. 8 66386 St. Ingbert Germany Phone: +49-(0)6 89 4 / 92 55-0 Fax: +49-(0)6 89 4 / 92 55-88 e-mail: contact@votronic.com
SIM card holder incl. push button ejector and slide-in tray	Molex	Ordering numbers: 91228 91236 Sales contacts are listed in Table 24.
Board-to-board connector	Molex	Sales contacts are listed in Table 24.
U.FL-R-SMT antenna connector	Hirose	See Section 4.3 for details on U.FL-R-SMT connector, mating plugs and cables. Sales contacts are listed in Table 25.

Draft

Table 24: Molex sales contacts (subject to change)

Molex For further information please click: http://www.molex.com/	Molex Deutschland GmbH Felix-Wankel-Str. 11 4078 Heilbronn-Biberach Germany Phone: +49-7066-9555 0 Fax: +49-7066-9555 29 Email: mxgermany@molex.com	American Headquarters Lisle, Illinois 60532 U.S.A. Phone: +1-800-78MOLEX Fax: +1-630-969-1352
Molex China Distributors Beijing, Room 1319, Tower B, COFCO Plaza No. 8, Jian Guo Men Nei Street, 100005 Beijing P.R. China Phone: +86-10-6526-9628 Phone: +86-10-6526-9728 Phone: +86-10-6526-9731 Fax: +86-10-6526-9730	Molex Singapore Pte. Ltd. Jurong, Singapore Phone: +65-268-6868 Fax: +65-265-6044	Molex Japan Co. Ltd. Yamato, Kanagawa, Japan Phone: +81-462-65-2324 Fax: +81-462-65-2366

Table 25: Hirose sales contacts (subject to change)

Hirose Ltd. For further information please click: http://www.hirose.com	Hirose Electric (U.S.A.) Inc 2688 Westhills Court Simi Valley, CA 93065 U.S.A. Phone: +1-805-522-7958 Fax: +1-805-522-3217	Hirose Electric GmbH Zeppelinstrasse 42 73760 Ostfildern Kemnat 4 Germany Phone: +49-711-4560-021 Fax +49-711-4560-729 E-mail info@hirose.de
Hirose Electric UK, Ltd Crownhill Business Centre 22 Vincent Avenue, Crownhill Milton Keynes, MK8 OAB Great Britain Phone:+44-1908-305400 Fax: +44-1908-305401	Hirose Electric Co., Ltd. 5-23, Osaki 5 Chome, Shinagawa-Ku Tokyo 141 Japan Phone: +81-03-3491-9741 Fax: +81-03-3493-2933	Hirose Electric Co., Ltd. European Branche First class Building 4F Beechavenue 46 1119PV Schiphol-Rijk Netherlands Phone: +31-20-6557-460 Fax: +31-20-6557-469

Draft

9.2 Fasteners and Fixings for Electronic Equipment

This section provides a list of suppliers and manufacturers offering fasteners and fixings for electronic equipment and PCB mounting. The content of this section is designed to offer basic guidance to various mounting solutions with no warranty on the accuracy and sufficiency of the information supplied. Please note that the list remains preliminary although it is going to be updated in later versions of this document.

9.2.1 Fasteners from German Supplier ETTINGER GmbH

Sales contact: ETTINGER GmbH
http://www.ettinger.de/main.cfm
Phone: +4981 04 66 23 – 0
Fax: +4981 04 66 23 – 0

The following tables contain only article numbers and basic parameters of the listed components. For further detail and ordering information please contact Ettinger GmbH.

Please note that some of the listed screws, spacers and nuts are delivered with the DSB75 Support Board. See comments below.

Article number: 05.71.038	**Spacer - Aluminum / Wall thickness = 0.8mm**
Length	3.0mm
Material	AlMgSi-0,5
For internal diameter	M2=2.0-2.3
Internal diameter	d = 2.4mm
External diameter	4.0mm
Vogt AG No.	x40030080.10
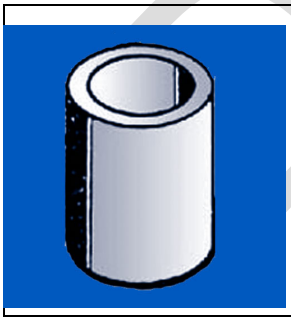	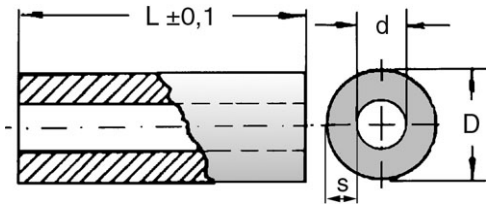

Draft

Article number: 07.51.403	**Insulating Spacer for M2** **Self-gripping** *)
Length	3.0mm
Material	Polyamide 6.6
Surface	Black
Internal diameter	2.2mm
External diameter	4.0mm
Flammability rating	UL94-HB
	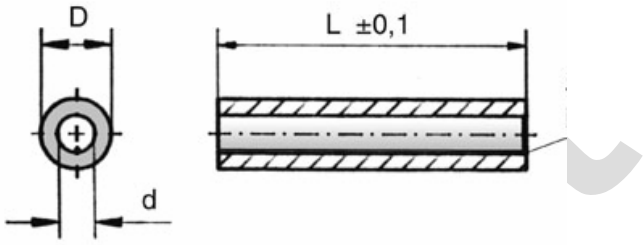

*) 2 spacers are delivered with DSB75 Support Board

Article number: 05.11.209	**Threaded Stud M2.5 - M2 Type E /** **External thread at both ends**
Length	3.0mm
Material	Stainless steel X12CrMoS17
Thread 1 / Length	M2.5 / 6.0mm
Thread 2 / Length	M2 / 8.0mm
Width across flats	5
Recess	yes
Type	External / External
	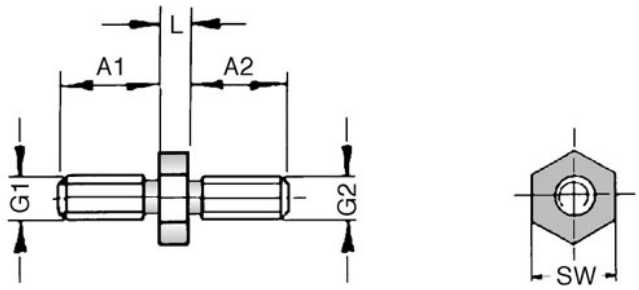

Draft

Article number: 01.14.131	**Screw M2** *) **DIN 84 - ISO 1207**
Length	8.0mm
Material	Steel 4.8
Surface	Zinced A2K
Thread	M2
Head diameter	D = 3.8mm
Head height	1.30mm
Type	Slotted cheese head screw
	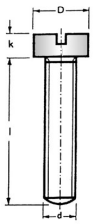

*) 2 screws are delivered with DSB75 Support Board

Article number: 01.14.141	**Screw M2** **DIN 84 - ISO 1207**
Length	10.0mm
Material	Steel 4.8
Surface	Zinced A2K
Thread	M2
Head diameter	D = 3.8mm
Head height	1.30mm
Type	Slotted cheese head screw
	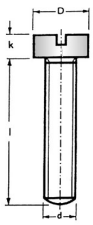

Draft

Article number: 02.10.011	**Hexagon Nut** *) **DIN 934 - ISO 4032**
Material	Steel 4.8
Surface	Zinced A2K
Thread	M2
Wrench size / Ø	4
Thickness / L	1.6mm
Type	Nut DIN/UNC, DIN934
	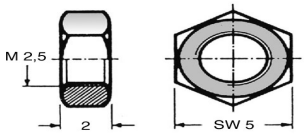

*) 2 nuts are delivered with DSB75 Support Board

9.3 Data Sheets of Recommended Batteries

The following two data sheets have been provided by VARTA Microbattery GmbH.

Click here for sales contacts and further information: http://www.varta-microbattery.com

Draft

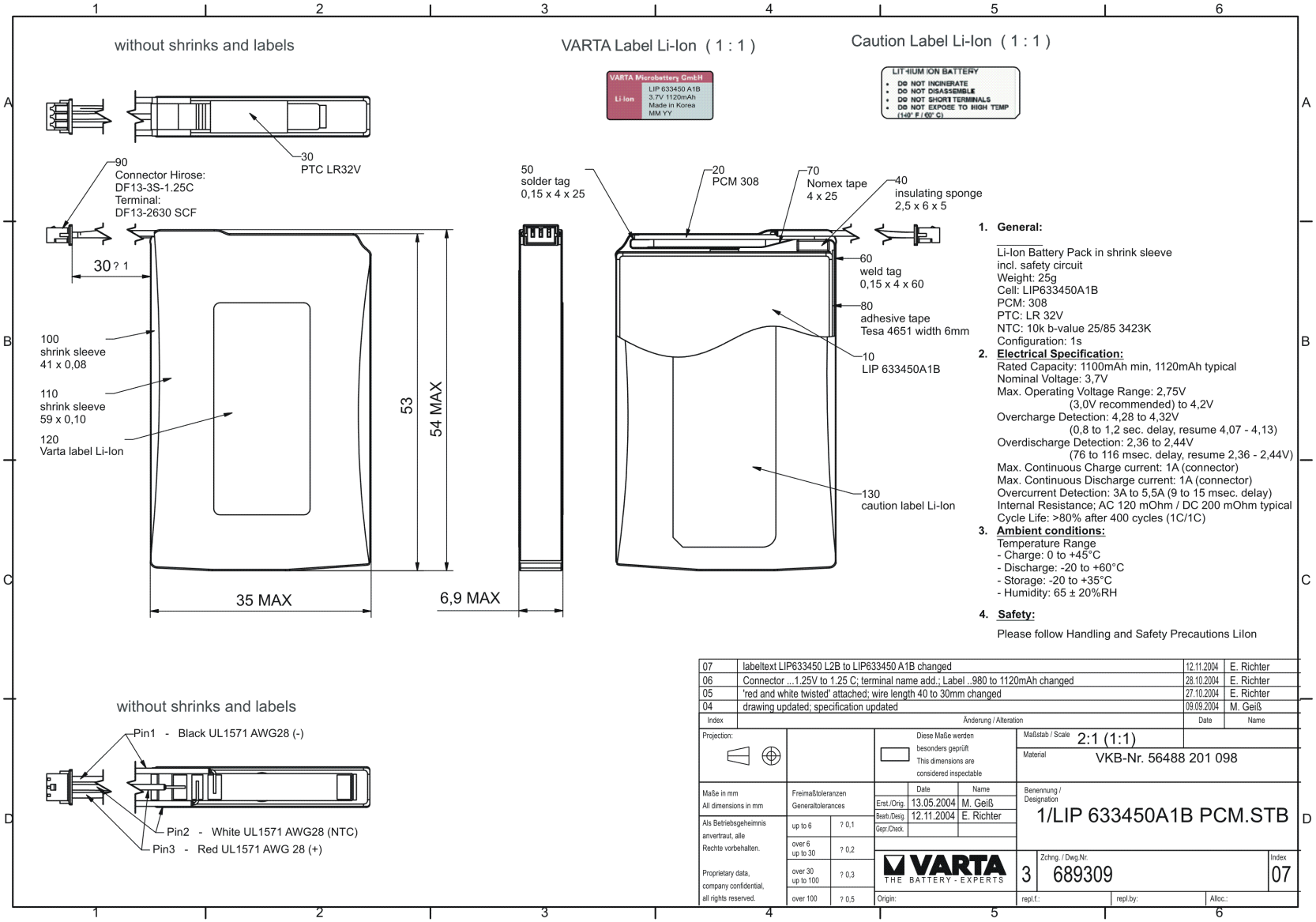

Figure 40: Lithium Ion battery from VARTA

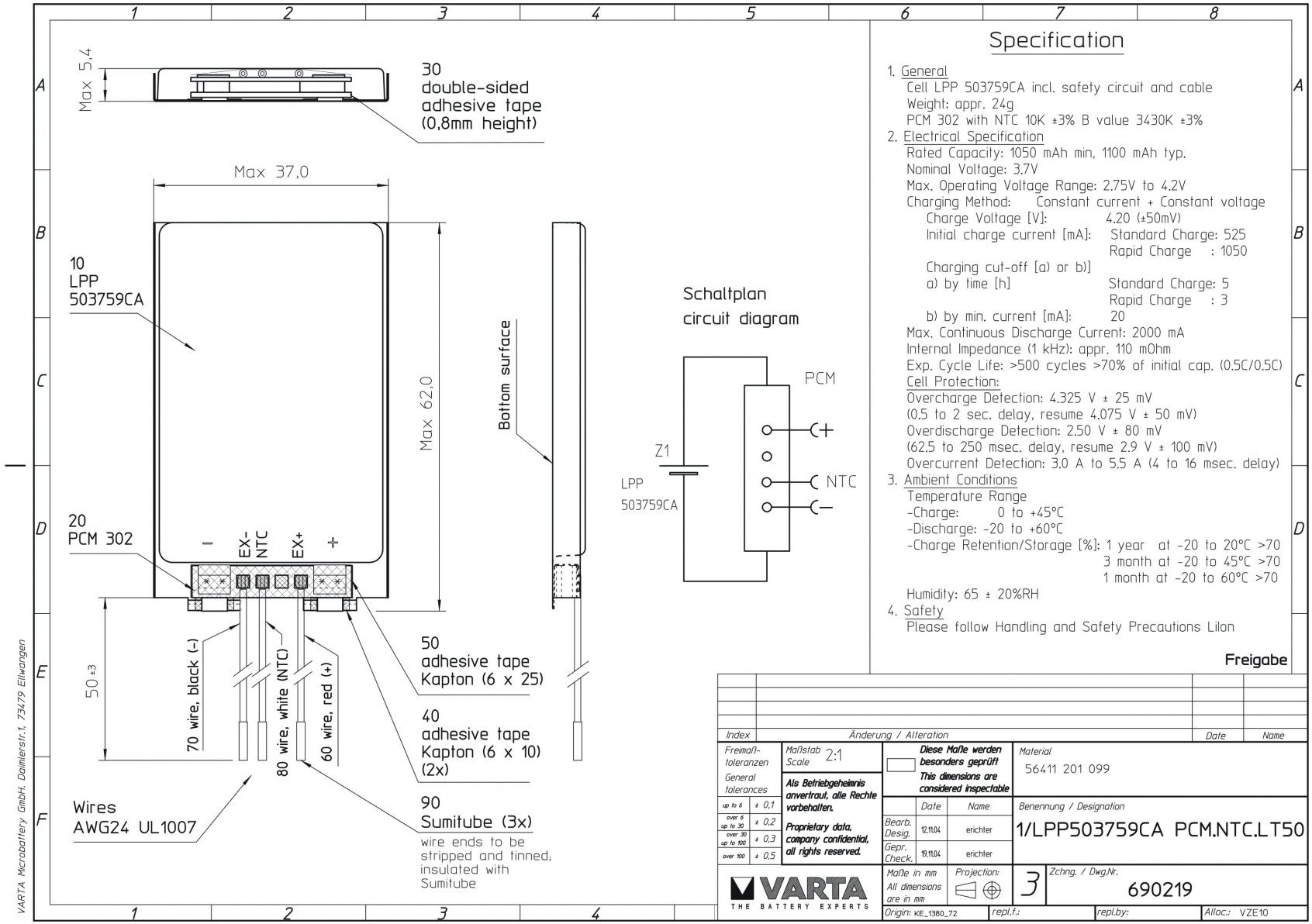

Figure 41: Lithium Polymer battery from VARTA