SIEMENS

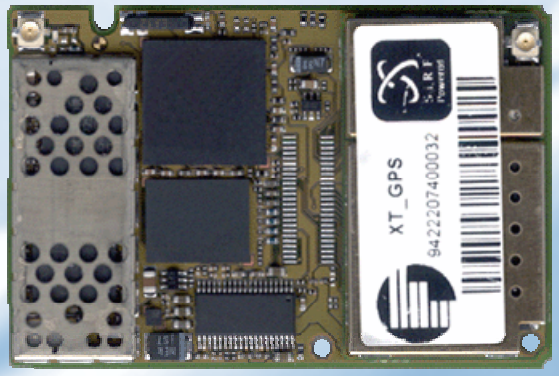

XT55/56
Siemens Cellular Engine

Version: 02.06a
DocID: XT55/56_hd_v02.06a

Hardware Interface Description

Document Name:	**XT55/56 Hardware Interface Description**
Version:	**02.06a**
Date:	**December 17, 2004**
DocId:	**XT55/56_hd_v02.06a**
Status:	**Confidential / Released**

General Notes
Product is deemed accepted by recipient and is provided without interface to recipient's products. The documentation and/or product are provided for testing, evaluation, integration and information purposes. The documentation and/or product are provided on an "as is" basis only and may contain deficiencies or inadequacies. The documentation and/or product are provided without warranty of any kind, express or implied. To the maximum extent permitted by applicable law, Siemens further disclaims all warranties, including without limitation any implied warranties of merchantability, completeness, fitness for a particular purpose and non-infringement of third-party rights. The entire risk arising out of the use or performance of the product and documentation remains with recipient. This product is not intended for use in life support appliances, devices or systems where a malfunction of the product can reasonably be expected to result in personal injury. Applications incorporating the described product must be designed to be in accordance with the technical specifications provided in these guidelines. Failure to comply with any of the required procedures can result in malfunctions or serious discrepancies in results. Furthermore, all safety instructions regarding the use of mobile technical systems, including GSM products, which also apply to cellular phones must be followed. Siemens or its suppliers shall, regardless of any legal theory upon which the claim is based, not be liable for any consequential, incidental, direct, indirect, punitive or other damages whatsoever (including, without limitation, damages for loss of business profits, business interruption, loss of business information or data, or other pecuniary loss) arising out the use of or inability to use the documentation and/or product, even if Siemens has been advised of the possibility of such damages. The foregoing limitations of liability shall not apply in case of mandatory liability, e.g. under the German Product Liability Act, in case of intent, gross negligence, injury of life, body or health, or breach of a condition which goes to the root of the contract. However, claims for damages arising from a breach of a condition, which goes to the root of the contract, shall be limited to the foreseeable damage, which is intrinsic to the contract, unless caused by intent or gross negligence or based on liability for injury of life, body or health. The above provision does not imply a change on the burden of proof to the detriment of the recipient. Subject to change without notice at any time. The interpretation of this general note shall be governed and construed according to German law without reference to any other substantive law.

Copyright
Transmittal, reproduction, dissemination and/or editing of this document as well as utilization of its contents and communication thereof to others without express authorization are prohibited. Offenders will be held liable for payment of damages. All rights created by patent grant or registration of a utility model or design patent are reserved.

Copyright © Siemens AG 2004

Trademark notices
MS Windows® is a registered trademark of Microsoft Corporation.
SiRFDemo Software and SiRFstar are registered trademarks of SiRF Technology Inc., San Jose, California.
Section 4.2, 4.3.1, 4.8 and 9 used with the permission of SiRF Technology, Inc., San Jose, California

Contents

0 Document history 8

1 Introduction 11
1.1 Related documents 11
1.2 Terms and abbreviations 12
1.3 Type approval 16
1.4 Safety precautions 18

2 Product concept 20
2.1 XT55/56 key features at a glance 21
2.2 Circuit concept 24

3 GSM application interface 26
3.1 GSM/GPRS operating modes 26
3.2 Power supply 28
3.2.1 Power supply pins on the board-to-board connector 28
3.2.2 Minimizing power losses 29
3.2.3 Monitoring power supply 29
3.3 Power up / down scenarios 30
3.3.1 Turn on the GSM part of XT55/56 30
3.3.1.1 Turn on the GSM part of XT55/56 using the ignition line GSM_IGT (Power on) 31
3.3.1.2 Timing of the ignition process 32
3.3.1.3 Turn on the GSM part of XT55/56 using the GSM_POWER signal 33
3.3.1.4 Turn on the GSM part of XT55/56 using the RTC (Alarm mode) 33
3.3.2 Turn off the GSM part of XT55/56 35
3.3.2.1 Turn off GSM part of the XT55/56 module using AT command 35
3.3.2.2 Emergency shutdown using GSM_EMERGOFF pin 36
3.3.3 Automatic shutdown 37
3.3.3.1 Temperature dependent shutdown 37
3.3.3.2 Temperature control during emergency call 38
3.3.3.3 Undervoltage shutdown if battery NTC is present 38
3.3.3.4 Undervoltage shutdown if no battery NTC is present 39
3.3.3.5 Overvoltage shutdown 39
3.4 Automatic GPRS Multislot Class change 40
3.5 Charging control of the GSM part 41
3.5.1 Battery pack characteristics 43
3.5.2 Recommended battery pack specification 44
3.5.3 Implemented charging technique 45
3.5.4 Operating modes during charging 46
3.5.5 Charger requirements 47
3.6 Power saving 48
3.6.1 No power saving (AT+CFUN=1) 48
3.6.2 NON-CYCLIC SLEEP mode (AT+CFUN=0) 48
3.6.3 CYCLIC SLEEP mode (AT+CFUN=5, 6, 7, 8) 48
3.6.4 CYCLIC SLEEP mode AT+CFUN=9 49
3.6.5 Timing of the GSM_CTS signal in CYCLIC SLEEP modes 49
3.6.6 Wake up XT55/56 from SLEEP mode 51

3.7 Summary of state transitions (except SLEEP mode) 53
3.8 RTC backup for GSM part of XT55/56 54
3.9 Serial interfaces of the XT55/56 GSM part 55
3.9.1 Features supported on the first serial interface of GSM part (ASC0) 55
3.9.2 Features supported on the second serial interface of GSM part (ASC1) 56
3.9.3 ASC0 and ASC1 configuration 56
3.10 Audio interfaces 57
3.10.1 Microphone circuit 58
3.10.2 Speech processing 59
3.10.3 DAI timing 59
3.11 SIM interface 61
3.11.1 Requirements for using the GSM_CCIN pin 62
3.11.2 Design considerations for SIM card holder 63
3.12 Control signals 64
3.12.1 Inputs 64
3.12.2 Outputs 65
3.12.2.1 Synchronization signal 65
3.12.2.2 Using the GSM_SYNC pin to control a status LED 66
3.12.3 Behavior of the GSM_RING0 line (ASC0 interface only) 68

4 GPS application interface 70
4.1 Theory of operation 70
4.2 Technical data 71
4.3 GPS operating modes 72
4.3.1 Trickle Power mode 73
4.3.2 Comparison of Trickle Power and Push-to-Fix mode 74
4.4 Power supply of the XT55/56 GPS part 75
4.5 General purpose input/output 75
4.6 Serial interfaces of the XT55/56 GPS part 76
4.7 GPS control signals 76
4.8 Receiver architecture 77
4.9 Operation procedure 78
4.10 Start-up procedures 79
4.10.1 Coldstart 79
4.10.2 Warmstart 79
4.10.3 Hotstart 79

5 GSM and GPS antenna interfaces 80
5.1 GSM antenna installation 80
5.1.1 GSM antenna connector 80
5.1.2 GSM antenna pad 82
5.2 Installing the GPS antenna 82
5.3 Hirose antenna connector 83

6 Electrical, reliability and radio characteristics 87
6.1 Absolute maximum ratings 87
6.2 Operating temperatures 87
6.3 Pin description 89
6.4 Power supply ratings 95
6.4.1 Current consumption during GSM transmit burst 97
6.5 Electrical characteristics of the voiceband part 102
6.5.1 Setting audio parameters by AT commands 102
6.5.2 Audio programming model 103
6.5.3 Characteristics of audio modes 104

6.5.4 Voiceband receive path 105
6.5.5 Voiceband transmit path 106
6.6 Air interface of the XT55/56 GSM part 107
6.7 Electrostatic discharge 108
6.8 Reliability characteristics 109

7 Mechanics 110
7.1 Mechanical dimensions of XT55/56 110
7.2 Mounting XT55/56 onto the application platform 112
7.3 Board-to-board connector 114

8 Reference approval 116
8.1 Reference equipment for type approval 116
8.2 Compliance with FCC Rules and Regulations (XT55 only) 117
8.3 Compliance with FCC Rules and Regulations (XT56 only) 118

9 Example applications 119

10 List of parts and accessories 123

Figures

Figure 1: Block diagram of serial interface concept 25
Figure 2: Power supply limits during transmit burst 29
Figure 3: Power-on by ignition signal 31
Figure 4: Timing of power-on process if GSM_VDDLP is not used 32
Figure 5: Timing of power-on process if GSM_VDDLP is fed from external source 32
Figure 6: Deactivating GSM engine by GSM_EMERGOFF signal 36
Figure 7: Schematic of approved charging transistor, trickle charging and ESD protection 41
Figure 8: Battery pack circuit diagram 43
Figure 9: Charging process 45
Figure 10: Timing of CTS signal (example for a 2.12 s paging cycle) 50
Figure 11: Beginning of power saving if CFUN=5 or 7 50
Figure 12: RTC supply from capacitor 54
Figure 13: RTC supply from rechargeable battery 54
Figure 14: RTC supply from non-chargeable battery 54
Figure 15: Audio block diagram 57
Figure 16: Schematic of microphone inputs 58
Figure 17: DAI timing on transmit path 60
Figure 18: DAI timing on receive path 60
Figure 19: SIM card holder of DSB45 Support Box 63
Figure 20: Pin numbers of Molex SIM card holder on DSB45 Support Box 63
Figure 21: GSM_SYNC signal during transmit burst 65
Figure 22: LED Circuit (Example) 67
Figure 23: Incoming voice call 68
Figure 24: Incoming data call 68
Figure 25: URC transmission 68
Figure 26: Theory of operation 70
Figure 27: Example for current in Trickle Power mode 73
Figure 28: Comparing typical current in Trickle Power and Push-to-Fix mode 74
Figure 29: Example of LED circuit 77
Figure 30: Receiver architecture of the GPS receiver 77
Figure 31: U.FL-R-SMT connector 80
Figure 32: Antenna pad and GND plane 80
Figure 33: Never use antenna connector and antenna pad at the same time 81
Figure 34: Restricted area around antenna pad 81
Figure 35: GPS antenna connector (U.FL-R-SMT connector) 82
Figure 36: Mechanical dimensions of U.FL-R-SMT connector 83
Figure 37: U.FL-R-SMT connector with U.FL-LP-040 plug 84
Figure 38: U.FL-R-SMT connector with U.FL-LP-066 plug 84
Figure 39: Specifications of U.FL-LP-(V)-040(01) plug 85
Figure 40: Pin assignment (top view on XT55/56) 89
Figure 41: Typical current consumption vs. return loss in EGSM 900 network 97
Figure 42: Typical current consumption vs. return loss in GSM 1800 network 98
Figure 43: Typical current consumption vs. return loss in GSM 1900 network 98
Figure 44: Peak current consumption during transmit burst in EGSM 900 network 99
Figure 45: Peak current consumption during transmit burst in GSM 1800 network 99
Figure 46: Peak current consumption during transmit burst in GSM 1900 network 100
Figure 47: Typical current consumption vs. return loss 101
Figure 48: AT audio programming model 103
Figure 49: XT55/56 – top view 110
Figure 50: XT55/56 bottom view 110
Figure 51: Mechanical dimensions of XT55/56 111
Figure 52: Mounting holes on XT55/56 112

Figure 53: Recommended dowel 113
Figure 54: Mechanical dimensions of Hirose DF12 connector 115
Figure 55: Reference equipment for approval 116
Figure 56: Block diagram of XT55/56 for SiRF Demo application 119
Figure 57: Block diagram of XT55/56 with AVL application (optional) 120
Figure 58: XT55/56 tracking phone with external μC (example application) 121

Tables

Table 1: XT55/56 key features 21
Table 2: GSM coding schemes and maximum net data rates over air interface 23
Table 3: Overview of GSM/GPRS operating modes 26
Table 4: Power supply pins of board-to-board connector 28
Table 5: AT commands available in Alarm mode 33
Table 6: Temperature dependent behavior 38
Table 7: Bill of material for external charging circuit 42
Table 8: Specifications of recommended battery pack 44
Table 9: Comparison Charge-only and Charge mode 46
Table 10: AT commands available in Charge-only mode 47
Table 11: Wake-up events in NON-CYCLIC and CYCLIC SLEEP modes 51
Table 12: State transitions of XT55/56 (except SLEEP mode) 53
Table 13: DCE-DTE wiring of 1st serial interface (GSM part) 56
Table 14: DCE-DTE wiring of 2nd serial interface (GSM part) 56
Table 15: Signals of the SIM interface (board-to-board connector) 61
Table 16: Pin assignment of Molex SIM card holder on DSB45 Support Box 63
Table 17: Input control signals of the GSM part of the XT55/56 module 64
Table 18: Coding of the status LED 66
Table 19: ASC0 ring signal 69
Table 20: Return loss 80
Table 21: Product specifications of U.FL-R-SMT connector 83
Table 22: Material and finish of U.FL-R-SMT connector and recommended plugs 84
Table 23: Ordering information for Hirose U.FL Series 86
Table 24: Absolute maximum ratings (GSM part) 87
Table 25: Absolute maximum rating (GPS part) 87
Table 26: Operating temperatures 87
Table 27: Electrical description of application interface 90
Table 28: Power supply ratings (GSM part) 95
Table 29: Power supply ratings (GPS part) 96
Table 30: Audio parameters adjustable by AT command 102
Table 31: Voiceband characteristics (typical) 104
Table 32: Voiceband receive path 105
Table 33: Voiceband transmit path 106
Table 34: Air Interface 107
Table 35: Measured electrostatic values 108
Table 36: Summary of reliability test conditions 109
Table 37: Ordering information DF12 series 114
Table 38: Electrical and mechanical characteristics of the Hirose DF12C connector 114
Table 39: List of parts and accessories 123
Table 40: Molex sales contacts (subject to change) 125
Table 41: Hirose sales contacts (subject to change) 125

0 Document history

Preceding document: "XT55 Hardware Interface Description" Version 02.06
New document: "XT55/56 Hardware Interface Description" Version **02.06a**

Chapter	What is new
Throughout the document	Added XT56.
4.4	Notes about power supply of RTC and SRAM of GPS part.
5.3	Table 23: Corrected Hirose part number U.FL-LP-068.
10	Added Siemens ordering number for module XT56.

Preceding document: "XT55 Hardware Interface Description" Version 01.06
New document: "XT55 Hardware Interface Description" Version **02.06**

Chapter	What is new
Throughout the document	Deleted remarks regarding TCP/IP software which is currently not supported.
1.1	Updated list of related documents.

Preceding document: "XT55 Hardware Interface Description" Version 01.00b
New document: "XT55 Hardware Interface Description" Version **01.06**

Chapter	What is new
1.3	Updated list of standards.
2.1, 4.2	SDn1, SDn2: both GPS interfaces support baud rates from 4800 … 115200 bps
3.6, 3.12.2	More detailed description of status LED patterns
3.11, 3.11.2	• Use GSM_CCGND line to shield GSM_CCIO line from GSM_CCCLK line. • Connect a 47 pF capacitor from the GSM_CCIO to the GSM_CCGND line.
3.11.2	Improved Figure 19
4.2	GPS receiver sensitivity has been changed from –142 dBm to –138 dBm
4.7	GPS_RFPC0 and GPS_RFPC1 must be connected as shown in Figure 58 in order to use the Trickle Power mode, deleted GPS_GPIO9 (T_MARK)
6.4	Added footnote regarding test conditions
6.5.3	Table 31: Sidetone gain at default settings for audio mode 5 and 6 set to -∞ dB
7.2	Figure 53: Improved figure
8.2	Added IC: 267W-XT55/56
9	Figure 58: • Two pull-up resistors must be added in order to ensure the correct voltage level during start-up and reset procedure of the GPS base-band processor • Added 47 pF capacitor
10	Added new Siemens ordering numbers

Preceding document: "XT55 Hardware Interface Description" Version 01.00a
New document: "XT55 Hardware Interface Description" Version **01.00b**

Chapter	What is new
General Notes	Added note about the use of extracts from SiRF documentation

Preceding document: "XT55 Hardware Interface Description" Version 01.00
New document: "XT55 Hardware Interface Description" Version **01.00a**

Chapter	What is new
General Notes	Added trademark notice regarding SiRF Software
7.1	Figure 51: Mechanical dimensions of XT55/56 – added new drawing

Preceding document: "XT55/56 Hardware Interface Description" Version 00.02
New document: "XT55/56 Hardware Interface Description" Version **01.00**

Chapter	What is new
Throughout the document	Renamed “GSM/GPRS part” to “GSM part”
2nd cover page	New version of General Notes
1.1	Updated list of related documents
1.3	XT55/56 is now fully type approved and marked with the CE conformity label
2	Restructured the chapter, moved figures regarding SiRF Demo, AVL and TCP/IP application to Chapter 9
3.5.3	Added remark that charging begins again when voltage drops below 4.0V.
6.2	Added footnote regarding heat sink.
7.2	Added further mounting advices
9	New chapter: Design example
----	Deleted chapter: Maximum number of turn-on / turn-off cycles

Preceding document: "XT55/56 Hardware Interface Description" Version 00.01
New document: "XT55/56 Hardware Interface Description" Version **00.02**

Chapter	What is new
Throughout this document	• Maximum temperature has been changed from +65°C to +70°C. • Pins have been clearly divided into GPS and GSM pins.
1.1	Updated list of related documents
1.2	Added GPS terms abbreviations
2.1	Added new key features regarding GPS
2.2	Added Figure 56 and Figure 57
3.5.2	Deleted vendor XWODA, battery pack can be obtained from various dealers
4.1	New chapter: Theory of operation
4.3f	Detailed description of GPS operating modes
4.4	Added information regarding the power supply pins of the GPS part
4.5	New chapter: General purpose input/output

Chapter	What is new
4.6	More information regarding the two serial interfaces of the GPS part
4.7	Added a complete list of GPS control signals
4.8	New chapter describing the functionality of the integrated GPS receiver
4.9	New chapter: Operation procedure
4.10	Detailed description of the GPS start-up procedure, coldstart, warmstart and hotstart
6.3	Renamed chapter and corrected pin assignment of B2B connector

1 Introduction

This document describes the hardware interface of the Siemens XT55/56 module that connects to the cellular device application and the air interface. As XT55/56 is intended to integrate with a wide range of application platforms, all functional components are described in great detail.

This guide therefore covers all information needed to design and set up cellular applications incorporating the XT55/56 module. It aids rapid retrieval of interface specifications, electrical and mechanical details and information on the requirements to be considered for integration of further components.

Please note that this document refers to the GPS software version 2.3 and XT55/56 module software version 02.06.

1.1 Related documents

[1] XT55 AT Command, Version 02.06
XT56 AT Command, Version 02.06
[2] GPS Command Specification
[3] AVL Software User's Guide
[4] GPS Startup User's Guide
[5] GSM/GPS Evaluation Board Description
[6] GPRS Startup User's Guide
[7] Remote-SAT User's Guide
[8] DSB45 Support Box - Evaluation Kit for Siemens Cellular Engines
[9] Application Note 14: Audio and Battery Parameter Download
[10] Application Note 02: Audio Interface Design
[11] Application Note 22: Using TTY / CTM equipment
[12] Multiplexer User's Guide
[13] Multiplex Driver Developer's Guide for Windows 2000 and Windows XP
[14] Multiplex Driver Installation Guide for Windows 2000 and Windows XP
[15] Application Note 24: Application Developer's Guide
[16] Application Note 28: Customer SIM Lock
[17] Application Note 21: Implementing Customer IMEI

Prior to using the XT55/56 engines or upgrading to a new firmware release, be sure to carefully read the latest product information.

To visit the Siemens Website you can use the following link:
http://www.siemens.com/wm

1.2 Terms and abbreviations

Abbreviation	Description
AD	Analog / Digital
ADC	Analog-to-Digital Converter
AFC	Automatic Frequency Control
AGC	Automatic Gain Control
ANSI	American National Standards Institute
ARFCN	Absolute Radio Frequency Channel Number
ARP	Antenna Reference Point
ASC0 / ASC1	Asynchronous Controller. Abbreviations used for first and second serial interface of XT55/56
ASIC	Application Specific Integrated Circuit
B	Thermistor Constant
B2B	Board-to-board connector
BER	Bit Error Rate
BTS	Base Transceiver Station
CB or CBM	Cell Broadcast Message
CE	Conformité Européene (European Conformity)
CHAP	Challenge Handshake Authentication Protocol
CPU	Central Processing Unit
CS	Coding Scheme
CSD	Circuit Switched Data
CTS	Clear to Send
DAC	Digital-to-Analog Converter
DAI	Digital Audio Interface
dBW	Decibel per Watt
dBm0	Digital level, 3.14dBm0 corresponds to full scale, see ITU G.711, A-law
DCE	Data Communication Equipment (typically modems, e.g. Siemens GSM engine)
DCS 1800	Digital Cellular System, also referred to as PCN
DGPS	Differential GPS
DOP	Dilution of Precision
DRX	Discontinuous Reception
DSB	Development Support Box
DSP	Digital Signal Processor
DSR	Data Set Ready
DTE	Data Terminal Equipment (typically computer, terminal, printer or, for example, GSM application)

Abbreviation	Description
DTR	Data Terminal Ready
DTX	Discontinuous Transmission
EFR	Enhanced Full Rate
EGSM	Enhanced GSM
EMC	Electromagnetic Compatibility
ESD	Electrostatic Discharge
ETS	European Telecommunication Standard
FCC	Federal Communications Commission (U.S.)
FDMA	Frequency Division Multiple Access
FR	Full Rate
GGA	GPS Fixed Data
GMSK	Gaussian Minimum Shift Keying
GPRS	General Packet Radio Service
GPS	Global Positioning System
GSM	Global Standard for Mobile Communications
HiZ	High Impedance
HR	Half Rate
I/O	Input/Output
IC	Integrated Circuit
IF	Intermediate Frequency
IMEI	International Mobile Equipment Identity
ISO	International Standards Organization
ITU	International Telecommunications Union
kbps	kbits per second
LED	Light Emitting Diode
Li-Ion	Lithium-Ion
LNA	Low Noise Amplifier
Mbps	Mbits per second
MMI	Man Machine Interface
MO	Mobile Originated
MS	Mobile Station (GSM engine), also referred to as TE
MSISDN	Mobile Station International ISDN number
MSK	Minimum Shift Key
MT	Mobile Terminated
NTC	Negative Temperature Coefficient
NMEA	National Maritime Electronics Association
OEM	Original Equipment Manufacturer

Abbreviation	Description
PA	Power Amplifier
PAP	Password Authentication Protocol
PBCCH	Packet Switched Broadcast Control Channel
PCB	Printed Circuit Board
PCL	Power Control Level
PCM	Pulse Code Modulation
PCN	Personal Communications Network, also referred to as DCS 1800
PCS	Personal Communication System, also referred to as GSM 1900
PDU	Protocol Data Unit
PLL	Phase Locked Loop
PPP	Point-to-point protocol
PRN	Pseudo-Random Noise Number – The identity of GPS satellites
PSU	Power Supply Unit
R&TTE	Radio and Telecommunication Terminal Equipment
RAM	Random Access Memory
RF	Radio Frequency
RMS	Root Mean Square (value)
ROM	Read-only Memory
RP	Receive Protocol
RTC	Real Time Clock
RTCM	Radio Technical Commission for Maritime Services
Rx	Receive Direction
SA	Selective Availability
SAR	Specific Absorption Rate
SELV	Safety Extra Low Voltage
SIM	Subscriber Identification Module
SMS	Short Message Service
SPI	Service Provider Interface
SRAM	Static Random Access Memory
TA	Terminal adapter (e.g. GSM engine)
TDMA	Time Division Multiple Access
TE	Terminal Equipment, also referred to as DTE
Tx	Transmit Direction
UART	Universal asynchronous receiver-transmitter
URC	Unsolicited Result Code
USSD	Unstructured Supplementary Service Data
VSWR	Voltage Standing Wave Ratio

Abbreviation	Description
WAAS	Wide Area Augmentation System
Phonebook abbreviations	
FD	SIM fixdialing phonebook
LD	SIM last dialing phonebook (list of numbers most recently dialed)
MC	Mobile Equipment list of unanswered MT calls (missed calls)
ME	Mobile Equipment phonebook
ON	Own numbers (MSISDNs) stored on SIM or ME
RC	Mobile Equipment list of received calls
SM	SIM phonebook

1.3 Type approval

XT55/56 has been approved to comply with the directives and standards listed below and is labeled with the CE conformity mark.

European directives

99/05/EC	"Directive of the European Parliament and of the council of 9 March 1999 on radio equipment and telecommunications terminal equipment and the mutual recognition of their conformity", in short referred to as R&TTE Directive 1999/5/EC
89/336/EC	Directive on electromagnetic compatibility
73/23/EC	Directive on electrical equipment designed for use within certain voltage limits (Low Voltage Directive)

Standards of North American Type Approval

CFR Title 47	"Code of Federal Regulations, Part 15, Part 22 and Part 24 (Telecommunications, PCS)"; US Equipment Authorization FCC
NAPRD.03	"Overview of PCS Type certification review board Mobile Equipment Type Certification and IMEI control" PCS Type Certification Review board (PTCRB)

Standards of European Type Approval

3GPP TS 51.010-1	"Digital cellular telecommunications system (Phase 2); Mobile Station (MS) conformance specification".
ETSI EN 301 511	"V7.0.1 (2000-12) Candidate Harmonized European Standard (Telecommunications series) Global System for Mobile communications (GSM); Harmonized standard for mobile stations in the GSM 900 and DCS 1800 bands covering essential requirements under article 3.2 of the R&TTE directive (1999/5/EC) (GSM 13.11 version 7.0.1 Release 1998)"
GCF-CC	"Global Certification Forum - Certification Criteria" V3.15.0
ETSI EN 301 489-1	"V1.2.1 Candidate Harmonized European Standard (Telecommunications series) Electro Magnetic Compatibility and Radio spectrum Matters (ERM); Electro Magnetic Compatibility (EMC) standard for radio equipment and services; Part 1: Common Technical Requirements"
ETSI EN 301 489-07	"V1.1.1 Electro Magnetic Compatibility and Radio spectrum Matters (ERM); Electro Magnetic Compatibility (EMC) standard for radio equipment and services; Part 7: Specific conditions for mobile and portable radio and ancillary equipment of digital cellular radio telecommunications systems (GSM and DCS)"
EN 60 950	Safety of information technology equipment (2000)

Requirements of quality

IEC 60068	Environmental testing
DIN EN 60529	IP codes

Compliance with international rules and regulations

Manufacturers of mobile or fixed devices incorporating XT55/56 modules are advised to have their completed product tested and approved for compliance with all applicable national and international regulations. As a tri-band GSM/GPRS engine designed for use on any GSM network in the world, XT55/56 is required to pass all approvals relevant to operation on the European and North American markets. For the North American market this includes the Rules and Regulations of the Federal Communications Commission (FCC) and PTCRB, for the European market the R&TTE Directives and GCF Certification Criteria must be fully satisfied.

The FCC Equipment Authorization granted to the XT55/56 Siemens reference application is valid *only* for the equipment described in Chapter 8.

SAR requirements specific to portable mobiles

Mobile phones, PDAs or other portable transmitters and receivers incorporating a GSM module must be in accordance with the guidelines for human exposure to radio frequency energy. This requires the Specific Absorption Rate (SAR) of portable XT55/56 based applications to be evaluated and approved for compliance with national and/or international regulations.

Since the SAR value varies significantly with the individual product design manufacturers are advised to submit their product for approval if designed for portable use. For European and US markets the relevant directives are mentioned below. It is the responsibility of the manufacturer of the final product to verify whether or not further standards, recommendations or directives are in force outside these areas.

Products intended for sale on US markets

ES 59005/ANSI C95.1	Considerations for evaluation of human exposure to Electromagnetic Fields (EMFs) from Mobile Telecommunication Equipment (MTE) in the frequency range 30MHz-6GHz

Products intended for sale on European markets

EN 50360	Product standard to demonstrate the compliance of mobile phones with the basic restrictions related to human exposure to electromagnetic fields (300 MHz - 3 GHz)

Note: Usage of XT55/56 in a fixed, mobile or portable application is not allowed without a new FCC certification.

1.4 Safety precautions

The following safety precautions must be observed during all phases of the operation, usage, service or repair of any cellular terminal or mobile incorporating XT55/56. Manufacturers of the cellular terminal are advised to convey the following safety information to users and operating personnel and to incorporate these guidelines into all manuals supplied with the product. Failure to comply with these precautions violates safety standards of design, manufacture and intended use of the product. Siemens AG assumes no liability for customer failure to comply with these precautions.

When in a hospital or other health care facility, observe the restrictions on the use of mobiles. Switch the cellular terminal or mobile off, if instructed to do so by the guidelines posted in sensitive areas. Medical equipment may be sensitive to RF energy.

The operation of cardiac pacemakers, other implanted medical equipment and hearing aids can be affected by interference from cellular terminals or mobiles placed close to the device. If in doubt about potential danger, contact the physician or the manufacturer of the device to verify that the equipment is properly shielded. Pacemaker patients are advised to keep their hand-held mobile away from the pacemaker, while it is on.

Switch off the cellular terminal or mobile before boarding an aircraft. Make sure it cannot be switched on inadvertently. The operation of wireless appliances in an aircraft is forbidden to prevent interference with communications systems. Failure to observe these instructions may lead to the suspension or denial of cellular services to the offender, legal action, or both.

Do not operate the cellular terminal or mobile in the presence of flammable gases or fumes. Switch off the cellular terminal when you are near petrol stations, fuel depots, chemical plants or where blasting operations are in progress. Operation of any electrical equipment in potentially explosive atmospheres can constitute a safety hazard.

Your cellular terminal or mobile receives and transmits radio frequency energy while switched on. Remember that interference can occur if it is used close to TV sets, radios, computers or inadequately shielded equipment. Follow any special regulations and always switch off the cellular terminal or mobile wherever forbidden, or when you suspect that it may cause interference or danger.

Road safety comes first! Do not use a hand-held cellular terminal or mobile when driving a vehicle, unless it is securely mounted in a holder for handsfree operation. Before making a call with a hand-held terminal or mobile, park the vehicle.

Handsfree devices must be installed by qualified personnel. Faulty installation or operation can constitute a safety hazard.

SOS

IMPORTANT!
Cellular terminals or mobiles operate using radio signals and cellular networks. Because of this connection cannot be guaranteed at all times under all conditions. Therefore, you should never rely solely upon any wireless device for essential communications, for example emergency calls.

Remember, in order to make or receive calls, the cellular terminal or mobile must be switched on and in a service area with adequate cellular signal strength.

Some networks do not allow for emergency calls if certain network services or phone features are in use (e.g. lock functions, fixed dialing etc.). You may need to deactivate those features before you can make an emergency call.

Some networks require that a valid SIM card be properly inserted in the cellular terminal or mobile.

2 Product concept

Designed for use on any GSM network in the world, Siemens XT55 is a tri-band GSM/GPRS engine that works on the three frequencies GSM 900 MHz, GSM 1800 MHz and GSM 1900 MHz and supports also GPS technology for satellite navigation. XT56 is a tri-band GSM/GPRS engine that works on the three frequencies GSM 850MHz, GSM 1800 MHz and GSM 1900 MHz and supports also GPS technology for satellite navigation. XT55/56 features GPRS multislot class 10 and supports the GPRS coding schemes CS-1, CS-2, CS-3 and CS-4.

The compact design of the XT55/56 module makes it easy to integrate GSM / GPRS and GPS as an all-in-one solution. It saves significantly both time and cost for integration of additional hardware components.

The integrated GPS module provides instant location information using satellite signals to enable users to ascertain where they are anywhere in the world. It consists of a fully integrated RF receiver and a 12 channel baseband.

The tiny XT55/56 module incorporates all you need to create high-performance GSM/GPRS solutions: baseband processor, power supply ASIC, complete radio frequency circuit including a power amplifier and antenna interface. The power amplifier is directly fed from the supply voltage GSM_BATT+. A compact “stacked FLASH / SRAM” device stores the XT55/56 software in the flash memory section, and static RAM section provides the additional storage capacity required by GPRS connectivity.

The physical interface to the cellular application is made through a board-to-board connector. It consists of 80 pins, required for controlling the unit, receiving GPS location data, transferring data and audio signals and providing power supply lines.

XT55/56 comprises two serial GSM interfaces (ASC0 and ASC1) and two serial GPS interfaces (Serial data 1 and Serial data 2) giving you maximum flexibility for easy integration with the Man-Machine Interface (MMI).

An extremely versatile audio concept offers various audio interfaces, each available on the board-to-board connector: a digital audio interface (DAI) and two analog audio interfaces. Using AT commands you can easily switch back and forth and select different audio modes.

The external dual-band or triple-band GSM antenna can be connected optionally to a connector on the top side or to a pad on the bottom side. A separate GPS antenna must be connected to the GPS part of the module in order to properly receive satellite data.

For battery powered applications, XT55/56 features a charging control which can be used to charge a Li-Ion battery. The charging circuit must be implemented outside the module on the application platform.

2.1 XT55/56 key features at a glance

Table 1: XT55/56 key features

Feature	Implementation
Power supply	Supply voltage 3.3V – 4.8V for the GSM / GPRS module Separate power supply source: 3.3V ± 5% for the GPS device
Power saving (GSM)	Minimizes power consumption in SLEEP mode
Power saving (GPS)	Trickle Power™ / Push-to-Fix mode
Charging	Supports charging control for Li-Ion battery for the GSM part of the module
Frequency bands	• XT55 Tri-band: EGSM 900, GSM 1800, GSM 1900 • XT56 Tri-band: GSM 850, GSM 1800, GSM 1900 • Compliant to GSM Phase 2/2+
GSM class	Small MS
Transmit power	• Class 4 (2W) at EGSM 900 and GSM 850 • Class 1 (1W) at GSM 1800 and GSM 1900
GPRS connectivity	• GPRS multi-slot class 10 • GPRS mobile station class B
GPS features	• GPS receiver with SiRFstar IIe/LP chip set • Processor type ARM7/TDMI • Sirf GSW2, version 2.3
Temperature range Temperature control and auto switch-off	• Normal operation: -20°C to +55°C • Restricted operation: -25°C to -20°C and +55°C to +70°C • Constant temperature control prevents damage to XT55/56 when the specified temperature is exceeded. When an emergency call is in progress the automatic temperature shutdown functionality is deactivated.
DATA *GPRS:*	• GPRS data downlink transfer: max. 85.6 kbps (see Table 2) • GPRS data uplink transfer: max. 42.8 kbps (see Table 2 • Coding scheme: CS-1, CS-2, CS-3 and CS-4 • XT55/56 supports the two protocols PAP (Password Authentication Protocol) and CHAP (Challenge Handshake Authentication Protocol) commonly used for PPP connections. • Support of Packet Switched Broadcast Control Channel (PBCCH) allows you to benefit from enhanced GPRS performance when offered by the network operators.
CSD:	• CSD transmission rates: 2.4, 4.8, 9.6, 14.4 kbps, non-transparent, V.110 • Unstructured Supplementary Services Data (USSD) support
WAP:	• WAP compliant
SMS	• MT, MO, CB, Text and PDU mode • SMS storage: SIM card plus 25 SMS locations in the mobile equipment • Transmission of SMS alternatively over CSD or GPRS. Preferred mode can be user-defined.

Feature	Implementation
MMS	MMS compliant
FAX	Group 3: Class 1, Class 2
SIM interface	Supported SIM card: 3V External SIM card reader has to be connected via interface connector (note that card reader is not part of XT55/56)
External antenna GSM / GPRS: GPS:	 Connected via 50 Ohm antenna connector or antenna pad. Separate GPS antenna connector. See Figure 49 for details.
Audio interfaces	Two analog audio interfaces, one digital audio interface (DAI)
Audio features	Speech codec modes: • Half Rate (ETS 06.20) • Full Rate (ETS 06.10) • Enhanced Full Rate (ETS 06.50 / 06.60 / 06.80) • Adaptive Multi Rate (AMR) Handsfree operation • Echo cancellation • Noise reduction
Two serial GSM interfaces: ASC0, ASC1	• 2.65V level, bi-directional bus for AT commands and data • ASC0 – full-featured 8-wire serial interface. Supports RTS0/CTS0 hardware handshake and software XON/XOFF flow control. Multiplex ability according to GSM 07.10 Multiplexer Protocol. • ASC1 - 4-wire serial interface. Supports RTS1/CTS1 hardware handshake and software XON/XOFF flow control. • Baud rate: 300bps ... 230kbps on ASC0 and ASC1 • Autobauding (on ASC0 only) detects 1200, 2400, 4800, 9600, 19200, 38400, 57600, 115200, 230400 bps
Two serial GPS interfaces: SDn1, SDn2	• Baud rate: 4800 … 115200 bps on SD1 and SD2 (default setting on both interfaces: 9600 bps)
Phonebook management	Supported phonebook types: SM, FD, LD, MC, RC, ON, ME
SIM Application Toolkit	Supports SAT class 3, GSM 11.14 Release 98, support of letter class “c”
Ringing tones	Offers a choice of 7 different ringing tones / melodies, easily selectable with AT command
Real time clock	Implemented
Timer function	Programmable via AT command
Support of TTY/CTM	To benefit from TTY communication via GSM, CTM equipment can be connected to one of the three audio interfaces.
Physical characteristics	Size: 35.0 ± 0.15mm x 53.0 ± 0.15mm x 5.1 ± 0.15mm Weight: 11g
Firmware upgrade	XT55/56 firmware upgradable over serial interface
Evaluation kit	The DSB45 Support Box is an evaluation kit designed to test and type approve the GSM part of Siemens cellular engines and provide a sample configuration for application engineering. See Chapter 10 for ordering information.

Table 2: GSM coding schemes and maximum net data rates over air interface

Coding scheme	1 Timeslot	2 Timeslots	4 Timeslots
CS-1:	9.05 kbps	18.1 kbps	36.2 kbps
CS-2:	13.4 kbps	26.8 kbps	53.6 kbps
CS-3:	15.6 kbps	31.2 kbps	62.4 kbps
CS-4:	21.4 kbps	42.8 kbps	85.6 kbps

Please note that the values stated above are maximum ratings which, in practice, are influenced by a great variety of factors, primarily, for example, traffic variations and network coverage.

2.2 Circuit concept

The XT55/56 module comprises the following major functional components:

GSM / GPRS baseband block:
- Baseband controller operating at 26MHz
- Power supply ASIC
- Stacked Flash / SRAM
- Application interface (board-to-board connector)

GSM RF block:
- Skyworks RF transceiver
- Skyworks RF power amplifier / FEM
- RF front end (antenna connector)

GPS block:
- Processor type: ARM7/TDMI
- Processor speed: 25 MHz

GPS RF block:
- GPS receiver with SiRFstar IIe/LP chip set

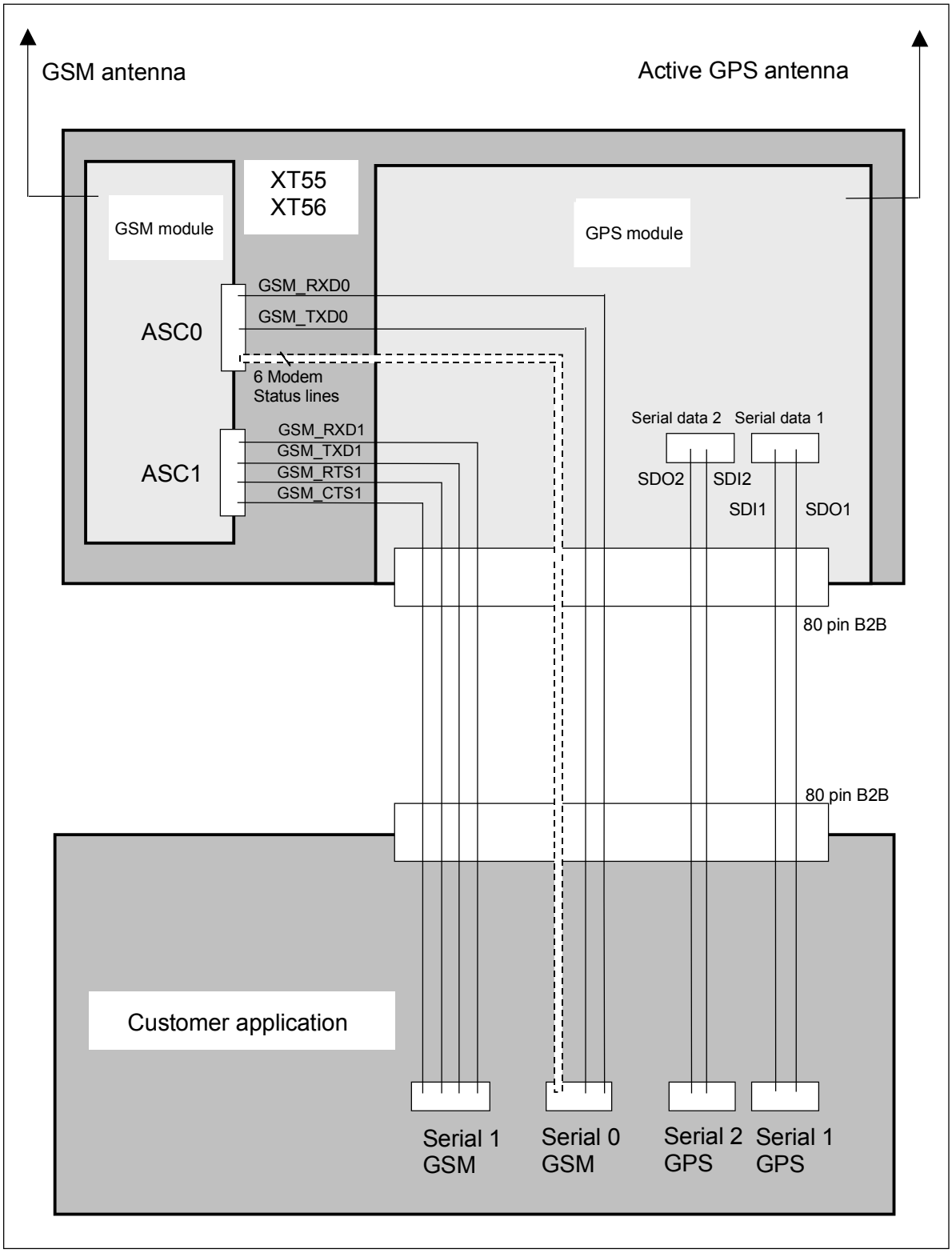

Figure 1: Block diagram of serial interface concept

3 GSM application interface

The GSM part of the XT55/56 module incorporates several sub-interfaces described in the following chapters:

- Power supply and charging control (see Chapters 3.2 and 3.3)
- Dual serial GSM interface (see Chapter 3.9)
- Two analog audio interfaces and a digital audio interface (see Chapter 3.10)
- SIM interface (see Chapter 3.11)

Electrical and mechanical characteristics of the board-to-board connector are specified in Chapter 7.3. Ordering information for mating connectors and cables are included.

3.1 GSM/GPRS operating modes

The table below briefly summarizes the various operating modes referred to in the following chapters. All information regarding GPS/GPRS operating modes are available in Chapter 4.3.

Table 3: Overview of GSM/GPRS operating modes

Mode	Function	
Normal operation	GSM / GPRS SLEEP	Various powersave modes set with AT+CFUN command. Software is active to minimum extent. If the module was registered to the GSM network in IDLE mode, it is registered and paging with the BTS in SLEEP mode, too. Power saving can be chosen at different levels: The NON-CYCLIC SLEEP mode (AT+CFUN=0) disables the AT interface. The CYCLIC SLEEP modes AT+CFUN=5, 6, 7, 8 and 9 alternatively activate and deactivate the AT interfaces to allow permanent access to all AT commands.
	GSM IDLE	Software is active. Once registered to the GSM network, paging with BTS is carried out. The module is ready to send and receive.
	GSM TALK	Connection between two subscribers is in progress. Power consumption depends on network coverage individual settings, such as DTX off/on, FR/EFR/HR, hopping sequences, antenna.
	GPRS IDLE	Module is ready for GPRS data transfer, but no data is currently sent or received. Power consumption depends on network settings and GPRS configuration (e.g. multislot settings).
	GPRS DATA	GPRS data transfer in progress. Power consumption depends on network settings (e.g. power control level), uplink / downlink data rates and GPRS configuration (e.g. used multislot settings).

Mode	Function
POWER DOWN	Normal shutdown after sending the AT^SMSO command. The Power Supply ASIC (PSU-ASIC) disconnects the supply voltage from the baseband part of the circuit. Only a voltage regulator in the PSU-ASIC is active for powering the RTC. Software is not active. The serial interfaces are not accessible. Operating voltage (connected to GSM_BATT+) remains applied.
Alarm mode	Restricted operation launched by RTC alert function while the module is in POWER DOWN mode. Module will not be registered to GSM network. Limited number of AT commands is accessible.
Charge-only mode	Limited operation for battery powered applications. Enables charging while module is detached from GSM network. Limited number of AT commands is accessible. There are several ways to launch Charge-only mode: • From POWER DOWN mode: Connect charger to the charger input pin of the external charging circuit and the module's GSM_POWER pin when XT55/56 was powered down by AT^SMSO. • From Normal mode: Connect charger to the charger input pin of the external charging circuit and the module's GSM_POWER pin, then enter AT^SMSO.
Charge mode during normal operation	Normal operation (SLEEP, IDLE, TALK, GPRS IDLE, GPRS DATA) and charging running in parallel. Charge mode changes to Charge-only mode when the module is powered down before charging has been completed.

See Table 11 and Table 12 for the various options of waking up the GSM part of the XT55/56 module and proceeding from one mode to another.

3.2 Power supply

The power supply for the GSM part of the XT55/56 module has to be a single voltage source of V_{GSM_BATT}+= 3.3V...4.8V. It must be able to provide sufficient current in a transmit burst which typically rises to 1.6A.

All the key functions for supplying power to the device are handled by an ASIC power supply. The ASIC provides the following features:

- Stabilizes the supply voltages for the GSM baseband using low drop linear voltage regulators.
- Controls the module's power up and power down procedures.
  A watchdog logic implemented in the baseband processor periodically sends signals to the ASIC, allowing it to maintain the supply voltage for all digital XT55/56 components. Whenever the watchdog pulses fail to arrive constantly, the module is turned off.
- Delivers, across the GSM_VDD pin, a regulated voltage of 2.9V. The output voltage GSM_VDD may be used to supply, for example, an external LED or a level shifter. However, the external circuitry must not cause any spikes or glitches on voltage GSM_VDD. This voltage is not available in POWER DOWN mode. Therefore, the GSM_VDD pin can be used to indicate whether or not GSM part of the XT55/56 module is in POWER DOWN mode.
- Provides power to the SIM interface.

The RF power amplifier is driven directly from GSM_BATT+.

3.2.1 Power supply pins on the board-to-board connector

Five GSM_BATT+ pins of the board-to-board connector are dedicated to connect the supply voltage, five GND pins are recommended for grounding. The values stated below must be measured directly at the reference points on the XT55/56 board (TP GSM_BATT+ and TP GND illustrated in Figure 50).

The GSM_POWER and GSM_CHARGE pins serve as control signals for charging a Li-Ion battery. GSM_VDDLP can be used to back up the RTC.

Table 4: Power supply pins of board-to-board connector

Signal name	I/O	Description	Parameter
GSM_BATT+	I/O	Positive operating voltage Reference points are the test points	3.3 V...4.8 V, $I_{typ} \leq 1.6$ A during transmit burst The minimum operating voltage must not fall below 3.3 V, not even in case of voltage drop.
GND	-	Ground	0 V
GSM_POWER	I	This line signals to the processor that the charger is connected.	
GSM_CHARGE	O	Control signal for external charging transistor	
GSM_VDDLP	I/O	Can be used to back up the RTC when $V_{GSM\ BATT+}$ is not applied. See Chapter 3.8	$U_{OUT,max} < V_{GSM\ BATT+}$ U_{IN} = 2.0 V...5.5 V R_i = 1kΩ $I_{in,max}$ = 30µA

3.2.2 Minimizing power losses

When designing the power supply for your application please pay specific attention to power losses. Ensure that the input voltage V_{GSM_BATT+} never drops below 3.3V on the GSM part of the XT55/56 board, not even in a transmit burst where current consumption can rise to typical peaks of 1.6A. It should be noted that the GSM part of the XT55/56 module switches off when exceeding these limits. Any voltage drops that may occur in a transmit burst should not exceed 400mV. For further details see Chapter 6.4.

The best approach to reducing voltage drops is to use a board-to-board connection as recommended, and a low impedance power source. The resistance of the power supply lines on the host board and of a battery pack should also be considered.

Note: If the application design requires an adapter cable between both board-to-board connectors, use a cable as short as possible in order to minimize power losses.

Example: If the length of the cable reaches the maximum length of 200mm, this connection may cause, for example, a resistance of 50mΩ in the GSM_BATT+ line and 50mΩ in the GND line. As a result, a 1.6A transmit burst would add up to a total voltage drop of 160mV. Plus, if a battery pack is involved, further losses may occur due to the resistance across the battery lines and the internal resistance of the battery including its protective circuit.

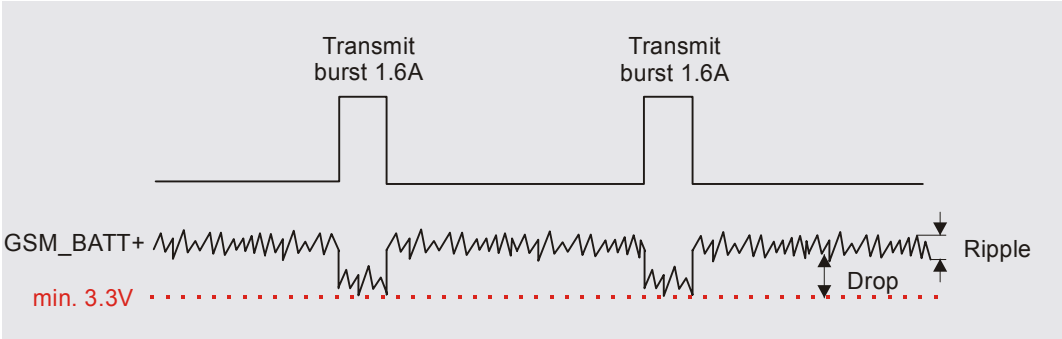

Figure 2: Power supply limits during transmit burst

The input voltage V_{GSM_BATT+} must be measured directly at the test points on the XT55/56 board (TP GSM_BATT+ and TP GND illustrated in Figure 50).

3.2.3 Monitoring power supply

To help you monitor the supply voltage you can use the AT^SBV command which returns the voltage measured at TP GSM_BATT+ and GND.

The voltage is continuously measured at intervals depending on the operating mode on the RF interface. The duration of measuring ranges from 0.5s in TALK/DATA mode up to 50s when the GSM part of the XT55/56 is in IDLE mode or Limited Service (deregistered). The displayed voltage (in mV) is averaged over the last measuring period before the AT^SBV command was executed.

For details please refer to [1].

3.3 Power up / down scenarios

In general, be sure not to turn on GSM part of the XT55/56 module while it is out of the operating range of voltage and temperature stated in Chapters 6.2 and 6.3. The GSM part of the XT55/56 would immediately switch off after having started and detected these inappropriate conditions.

3.3.1 Turn on the GSM part of XT55/56

The GSM part of the XT55/56 can be activated in a variety of ways, which are described in the following chapters:

- via ignition line GSM_IGT: starts normal operating state (see Chapters 3.3.1.1 and 3.3.1.2)
- via GSM_POWER line: starts charging algorithm (see Chapters 3.5.4 and 3.3.1.3)
- via RTC interrupt: starts Alarm mode (see Chapter 3.3.1.4)

3.3.1.1 Turn on the GSM part of XT55/56 using the ignition line GSM_IGT (Power on)

To switch on the XT55/56 GSM part the GSM_IGT (Ignition) signal needs to be driven to ground level for at least 100ms and not earlier than 10ms after the last falling edge of GSM_VDD. This can be accomplished using an open drain/collector driver in order to avoid current flowing into this pin.

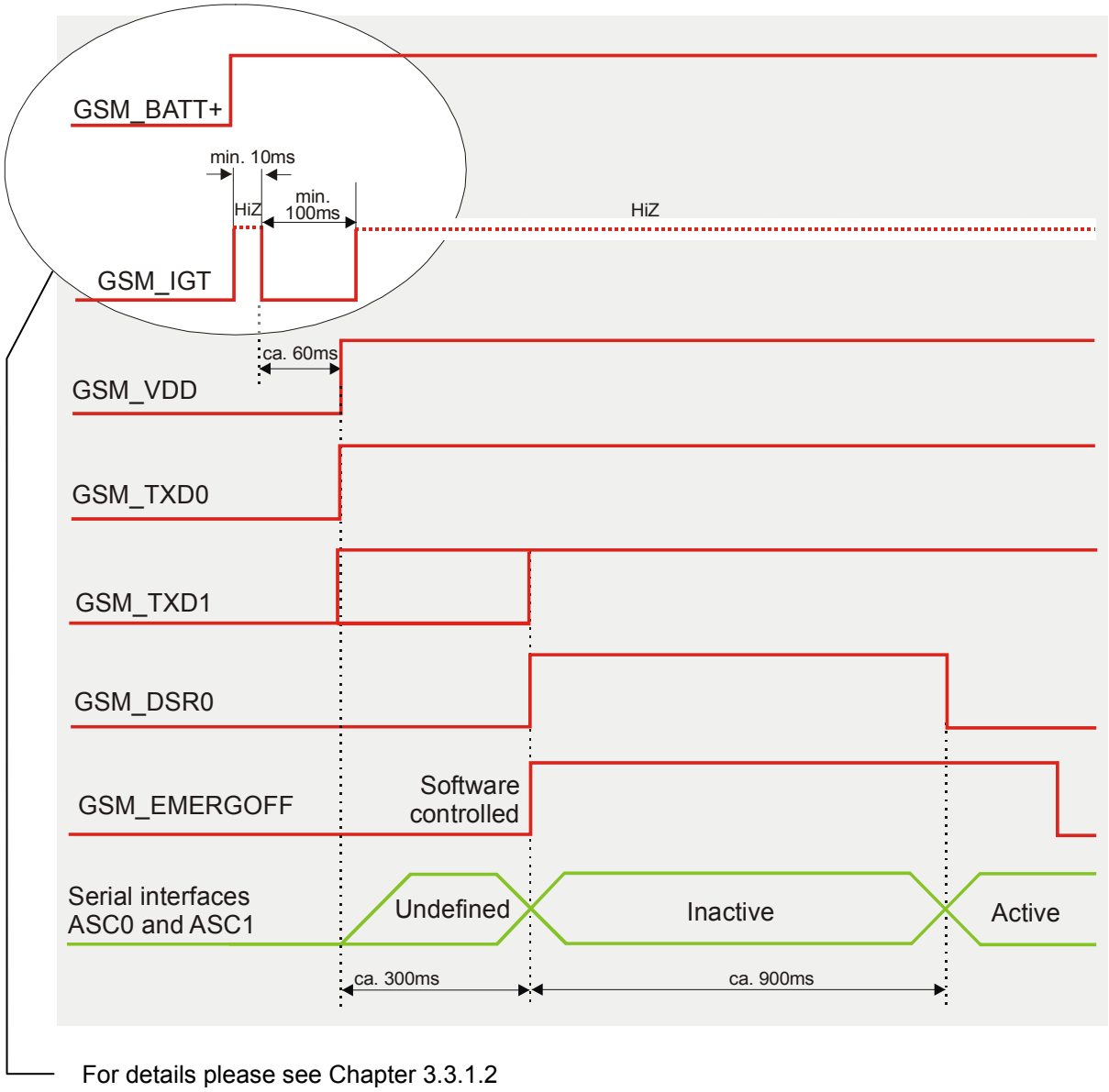

Figure 3: Power-on by ignition signal

If configured to a fix baud rate, the GSM part of the XT55/56 will send the result code ^SYSSTART to indicate that it is ready to operate. This result code does not appear when autobauding is active. See Chapter AT+IPR in [1].

In a battery operated XT55/56 application, the duration of the GSM_IGT signal must be 1s minimum when the charger is connected and you may want to go from Charge only mode to Normal mode.

3.3.1.2 Timing of the ignition process

When designing your application platform take into account that powering up the GSM part of the XT55/56 module requires the following steps.

- The ignition line cannot be operated until V_{GSM_BATT+} passes the level of 3.0V.
- The ignition line shall not be operated earlier than 10ms after the last falling edge of GSM_VDD.
- 10ms after V_{GSM_BATT+} has reached 3.0V the ignition line can be switched low. The duration of the falling edge must not exceed 1ms.
- Another 100ms are required to power up the module.
- Ensure that V_{GSM_BATT+} does not fall below 3.0V while the ignition line is driven. Otherwise the module cannot be activated.
- If the GSM_VDDLP line is fed from an external power supply as explained in Chapter 3.8, the GSM_IGT line is HiZ before the rising edge of GSM_BATT+.

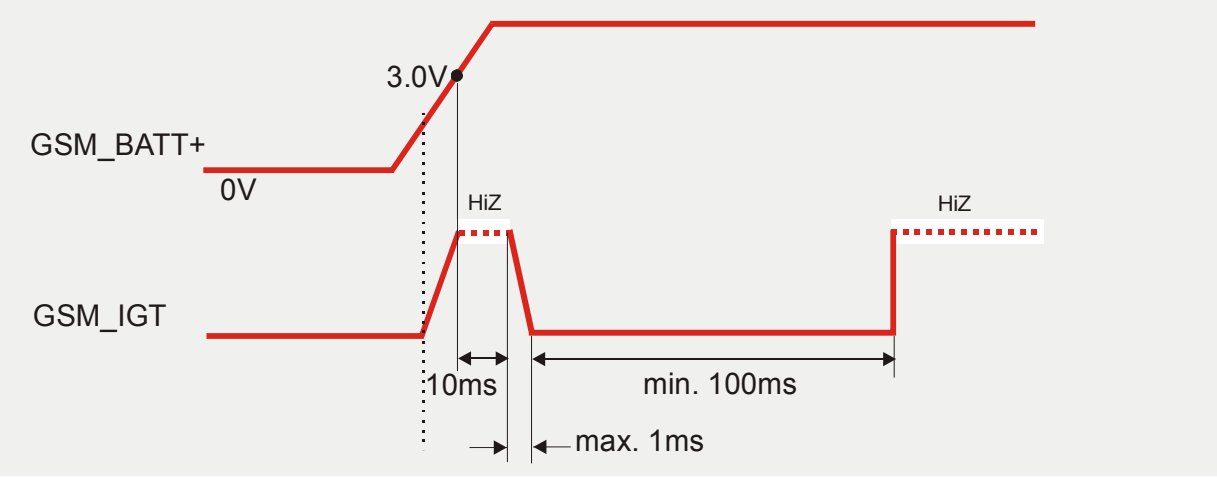

Figure 4: Timing of power-on process if GSM_VDDLP is not used

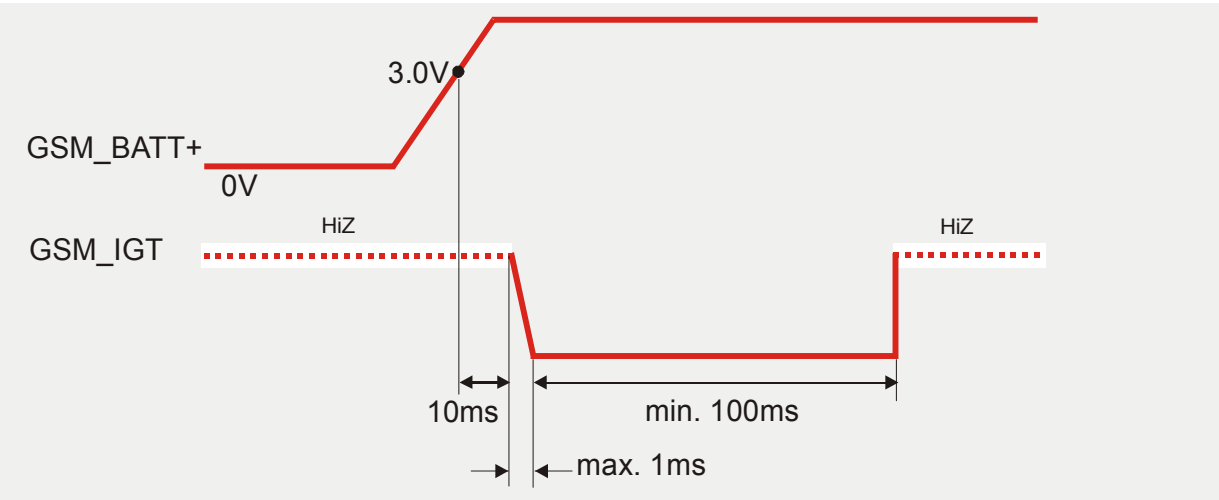

Figure 5: Timing of power-on process if GSM_VDDLP is fed from external source

3.3.1.3 Turn on the GSM part of XT55/56 using the GSM_POWER signal

As detailed in Chapter 3.5.4, the charging adapter can be connected regardless of the module's operating mode (except for Alarm mode).

If the charger is connected to the charger input of the external charging circuit and the module's GSM_POWER pin while XT55/56 is off, processor controlled fast charging starts (see Chapter 3.5.3). The GSM part of XT55/56 enters a restricted mode, referred to as Charge-only mode where only the charging algorithm will be launched.

During the Charge-only mode XT55/56 is neither logged on to the GSM network nor are the serial interfaces fully accessible. To switch to normal operation and log on to the GSM network, the GSM_IGT line needs to be activated.

3.3.1.4 Turn on the GSM part of XT55/56 using the RTC (Alarm mode)

Another power-on approach is to use the RTC, which is constantly supplied with power from a separate voltage regulator in the power supply ASIC. The RTC provides an alert function, which allows the GSM part of the XT55/56 to wake up whilst the internal voltage regulators are off. To prevent the engine from unintentionally logging into the GSM network, this procedure only enables restricted operation, referred to as Alarm mode. It must not be confused with a wake-up or alarm call that can be activated by using the same AT command, but without switching off power.

Use the *AT+CALA* command to set the alarm time. The RTC retains the alarm time if the GSM part of XT55/56 was powered down by AT^SMSO. Once the alarm is timed out and executed, XT55/56 enters the Alarm mode. This is indicated by an Unsolicited Result Code (URC) which reads:

^SYSSTART ALARM MODE

Note that this URC is the only indication of the Alarm mode and will not appear when autobauding was activated (due to the missing synchronization between DTE and DCE upon start-up). Therefore, it is recommended to select a fixed baudrate before using the Alarm mode. In Alarm mode only a limited number of AT commands is available. For further instructions refer to the AT Command Set.

Table 5: AT commands available in Alarm mode

AT command	Function
AT+CALA	Set alarm time
AT+CCLK	Set date and time of RTC
AT^SBC	In Alarm mode, you can only query the present current consumption and check whether or not a charger is connected. The battery capacity is returned as 0, regardless of the actual voltage (since the values measured directly on the cell are not delivered to the module).
AT^SCTM	Query temperature range, enable/disable URCs to report critical temperature ranges
AT^SMSO	Power down GSM engine

For the GSM engine to change from the Alarm mode to full operation (normal operating mode) it is necessary to drive the ignition line to ground. This must be implemented in your host application as described in Chapter 3.3.1.1.

If the charger is connected to the GSM_POWER line when GSM part of the XT55/56 is in ALARM mode charging will start, while XT55/56 stays in ALARM mode. See also Chapter 3.7 which summarizes the various options of changing the mode of operation.

If your host application uses the GSM_SYNC pin to control a status LED as described in Chapter 3.12.2.2, please note that the LED is off while the GSM engine is in Alarm mode.

3.3.2 Turn off the GSM part of XT55/56

To switch the module off the following procedures may be used:

- *Normal shutdown procedure*: Software controlled by sending the AT^SMSO command over the serial application interface. See Chapter 3.3.2.1.
- *Emergency shutdown*: Hardware driven by switching the GSM_EMERGOFF line of the board-to-board-connector to ground = immediate shutdown of supply voltages, only applicable if the software controlled procedure fails! See Chapter 3.3.2.2.
- *Automatic shutdown*: See Chapter 3.3.3
  a) Takes effect if undervoltage is detected.
  b) Takes effect if XT55/56 board temperature exceeds critical limit.

3.3.2.1 Turn off GSM part of the XT55/56 module using AT command

The best and safest approach to powering down the XT55/56 GSM part is to issue the *AT^SMSO* command. This procedure lets the GSM engine log off from the network and allows the software to enter into a secure state and safe data before disconnecting the power supply. The mode is referred to as POWER DOWN mode. In this mode, only the RTC stays active.

Before switching off the device sends the following response:

```
^SMSO: MS OFF

OK
^SHUTDOWN
```

After sending AT^SMSO do not enter any other AT commands. There are two ways to verify when the module turns off:

- Wait for the URC “^SHUTDOWN”. It indicates that data have been stored non-volatile and the module turns off in less than 1 second.
- Also, you can monitor the GSM_VDD pin. The low state of GSM_VDD definitely indicates that the module is switched off.

Be sure not to disconnect the operating voltage V_{GSM_BATT+} before the URC “^SHUTDOWN” has been issued and the GSM_VDD signal has gone low. Otherwise you run the risk of losing data.

While the GSM engine is in POWER DOWN mode the application interface is switched off and must not be fed from any other source. Therefore, your application must be designed to avoid any current flow into any digital pins of the application interface.

Note: In POWER DOWN mode, the GSM_EMERGOFF pin, the output pins of the ASC0 interface GSM_RXD0, GSM_CTS0, GSM_DCD0, GSM_DSR0, GSM_RING0 and the output pins of the ASC1 interface GSM_RXD1 and GSM_CTS1 are switched to high impedance state.
If this causes the associated input pins of your application to float, you are advised to integrate an additional resistor (100 kΩ – 1 MΩ) at each line. In the case of the GSM_EMERGOFF pin use a pull-down resistor tied to GND. In the case of the serial interface pins you can either connect pull-up resistors to the GSM_VDD line, or pull-down resistors to GND.

3.3.2.2 Emergency shutdown using GSM_EMERGOFF pin

Caution: *Use the GSM_EMERGOFF pin only when, due to serious problems, the software is not responding for more than 5 seconds. Pulling the GSM_EMERGOFF pin causes the loss of all information stored in the volatile memory since power is cut off immediately. Therefore, this procedure is intended only for use in case of emergency, e.g. if XT55/56 fails to shut down properly.*

The GSM_EMERGOFF signal is available on the board-to-board connector. To control the GSM_EMERGOFF line it is recommended to use an open drain / collector driver. To turn the GSM engine off, the GSM_EMERGOFF line has to be driven to ground for ≥ 3.2s.

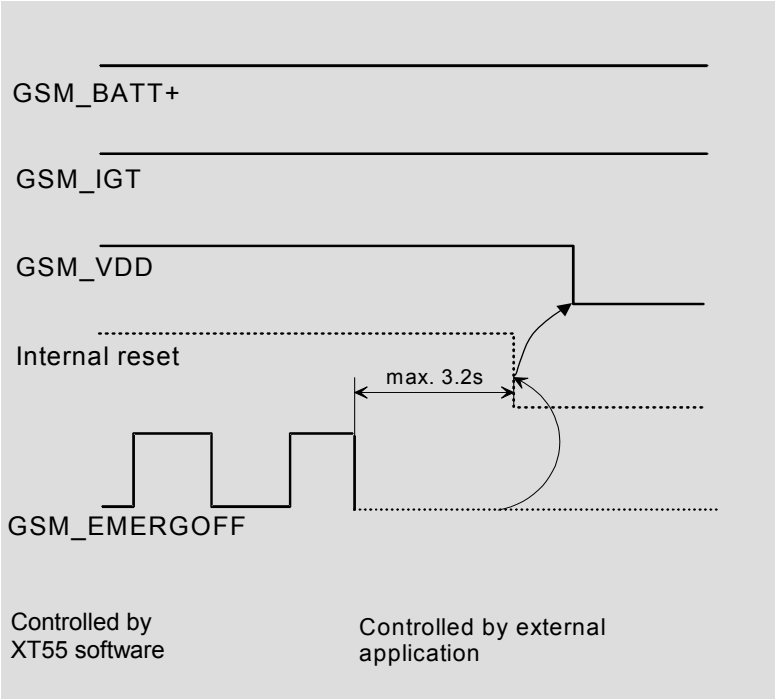

Figure 6: Deactivating GSM engine by GSM_EMERGOFF signal

How does it work:

- Voltage V_{GSM_BATT+} is permanently applied to the module.
- The module is active while the internal reset signal is kept at high level.
  During operation of XT55 the baseband controller generates watchdog pulses at regular intervals.
  Once the GSM_EMERGOFF pin is grounded these watchdog pulses are cut off from the power supply ASIC. The power supply ASIC shuts down the internal supply voltages of XT55 after max. 3.2s and the module turns off. Consequently, the output voltage at GSM_VDD is switched off.

3.3.3 Automatic shutdown

Automatic shutdown takes effect if

- the XT55/56 board is exceeding the critical limits of overtemperature or undertemperature
- the battery is exceeding the critical limits of overtemperature or undertemperature
- undervoltage is detected

The automatic shutdown procedure is equivalent to the power-down initiated with the AT^SMSO command, i.e. XT55/56 logs off from the network and the software enters a secure state avoiding loss of data. NOTE: This does not apply if overvoltage conditions or unrecoverable hardware or software errors occur (see below for details).

Alert messages transmitted before the device switches off are implemented as Unsolicited Result Codes (URCs). The presentation of these URCs can be enabled or disabled with the two AT commands AT^SBC and AT^SCTM. The URC presentation mode varies with the condition, please see Chapters 3.3.3.1 to 3.3.3.4 for details. For further instructions on AT commands refer to [1].

3.3.3.1 Temperature dependent shutdown

The board temperature is constantly monitored by an internal NTC resistor located on the PCB. The NTC that detects the battery temperature must be part of the battery pack circuit as described in Chapter 3.5. The values detected by either NTC resistor are measured directly on the board or the battery and therefore, are not fully identical with the ambient temperature.

Each time the board or battery temperature goes out of range or back to normal, XT55/56 instantly displays an alert (if enabled).

- URCs indicating the level "1" or "-1" allow the user to take appropriate precautions, such as protecting the module from exposure to extreme conditions. The presentation of the URCs depends on the settings selected with the AT^SCTM write command:
  AT^SCTM=1: Presentation of URCs is always enabled.
  AT^SCTM=0 (default): Presentation of URCs is enabled for 15 seconds time after start-up of XT55/56. After 15 seconds operation, the presentation will be disabled, i.e. no alert messages can be generated.
- URCs indicating the level "2" or "-2" are instantly followed by an orderly shutdown. The presentation of these URCs is always enabled, i.e. they will be output even though the factory setting AT^SCTM=0 was never changed.

The maximum temperature ratings are stated in Table 26. Refer to Table 6 for the associated URCs. All statements are based on test conditions according to IEC 60068-2-2 (still air).

Table 6: Temperature dependent behavior

Sending temperature alert (15 s after start-up, otherwise only if URC presentation enabled)	
^SCTM_A: 1	Caution: T_{amb} of battery close to over temperature limit.
^SCTM_B: 1	Caution: T_{amb} of board close to over temperature limit.
^SCTM_A: -1	Caution: T_{amb} of battery close to under temperature limit.
^SCTM_B: -1	Caution: T_{amb} of board close to under temperature limit.
^SCTM_A: 0	Battery back to uncritical temperature range.
^SCTM_B: 0	Board back to uncritical temperature range.
Automatic shutdown (URC appears no matter whether or not presentation was enabled)	
^SCTM_A: 2	Alert: T_{amb} of battery equal or beyond over temperature limit. XT55/56 switches off.
^SCTM_B: 2	Alert: T_{amb} of board equal or beyond over temperature limit. XT55/56 switches off.
^SCTM_A: -2	Alert: T_{amb} of battery equal or below under temperature limit. XT55/56 switches off.
^SCTM_B: -2	Alert: T_{amb} of board equal or below under temperature limit. XT55/56 switches off.

3.3.3.2 Temperature control during emergency call

If the temperature limit is exceeded while an emergency call is in progress the engine continues to measure the temperature, but deactivates the shutdown functionality. If the temperature is still out of range when the call ends, the module switches off immediately (without another alert message).

3.3.3.3 Undervoltage shutdown if battery NTC is present

In applications where the module's charging technique is used and an NTC is connected to the GSM_BATT_TEMP terminal, the software constantly monitors the applied voltage. If the measured battery voltage is no more sufficient to set up a call the following URC will be presented:

^SBC: Undervoltage.

The message will be reported, for example, when you attempt to make a call while the voltage is close to the critical limit and further power loss is caused during the transmit burst. To remind you that the battery needs to be charged soon, the URC appears several times before the module switches off.

To enable or disable the URC use the AT^SBC command. The URC will be enabled when you enter the write command and specify the power consumption of your GSM application. Step by step instructions are provided in [1].

3.3.3.4 Undervoltage shutdown if no battery NTC is present

The undervoltage protection is also effective in applications, where no NTC connects to the GSM_BATT_TEMP terminal. Thus, you can take advantage of this feature even though the application handles the charging process or XT55/56 is fed by a fixed supply voltage. All you need to do is executing the write command AT^SBC=<current> which automatically enables the presentation of URCs. You do not need to specify <current>.

Whenever the supply voltage falls below the specified value (see Table 28) the URC
^SBC: Undervoltage
appears several times before the module switches off.

3.3.3.5 Overvoltage shutdown

For overvoltage conditions, no software controlled shutdown is implemented. If the supply voltage exceeds the maximum value specified in Table 28, loss of data and even unrecoverable hardware damage can occur.

Keep in mind that several XT55/56 components are directly linked to GSM_BATT+ and, therefore, the supply voltage remains applied at major parts of XT55/56. Especially the power amplifier is very sensitive to high voltage and might even be destroyed.

3.4 Automatic GPRS Multislot Class change

Temperature control is also effective for operation in GPRS Multislot Class 10. If the board temperature increases to the limit specified for restricted operation[1)] while data are transmitted over GPRS, the module automatically reverts from GPRS Multislot Class 10 (2 Tx) to Class 8 (1Tx). This reduces the power consumption and, consequently, causes the board's temperature to decrease. Once the temperature drops to a value of 5 degrees below the limit of restricted operation, XT55/56 returns to the higher Multislot Class. If the temperature stays at the critical level or even continues to rise, XT55/56 will not switch back to the higher class.

After a transition from Multislot Class 10 to Multislot 8 a possible switchback to Multislot Class 10 is blocked for one minute.

Please note that there is not one single cause of switching over to a lower GPRS Multislot Class. Rather it is the result of an interaction of several factors, such as the board temperature that depends largely on the ambient temperature, the operating mode and the transmit power. Furthermore, take into account that there is a delay until the network proceeds to a lower or, accordingly, higher Multislot Class. The delay time is network dependent. In extreme cases, if it takes too much time for the network and the temperature cannot drop due to this delay, the module may even switch off as described in Chapter 3.3.3.1.

[1)] See Table 26 for temperature limits known as restricted operation.

3.5 Charging control of the GSM part

The GSM part of the XT55/56 module integrates a charging management for Li-Ion batteries. You can skip this chapter if charging is not your concern, or if you are not using the implemented charging algorithm.

XT55/56 has no on-board charging circuit. To benefit from the implemented charging management you are required to install a charging circuit within your application. In this case, XT55/56 needs to be powered from a Li-Ion battery pack, e.g. as specified in Table 8.

Note: The charging control described in this chapter is integrated in the GSM part of the XT55/56 and has been optimized for it only. When using the charging control function for the entire XT55/56 module, please consider the current consumption of the GPS part and your application. The value can be set with the AT^SBC command. This command should be used to specify the power consumption if the GSM part, the GPS part and your application are powered from the same battery. For further details refer to [1].
For using the trickle charging functionality you should design the 470R (illustrated in Figure 7) according to the current consumption of your application.

The module only delivers, via its GSM_POWER line and GSM_CHARGE line, the control signals needed to start and stop the charging process. The charging circuit should include a transistor and should be designed as illustrated in Figure 7. A list of parts recommended for the external circuit is given in Table 7.

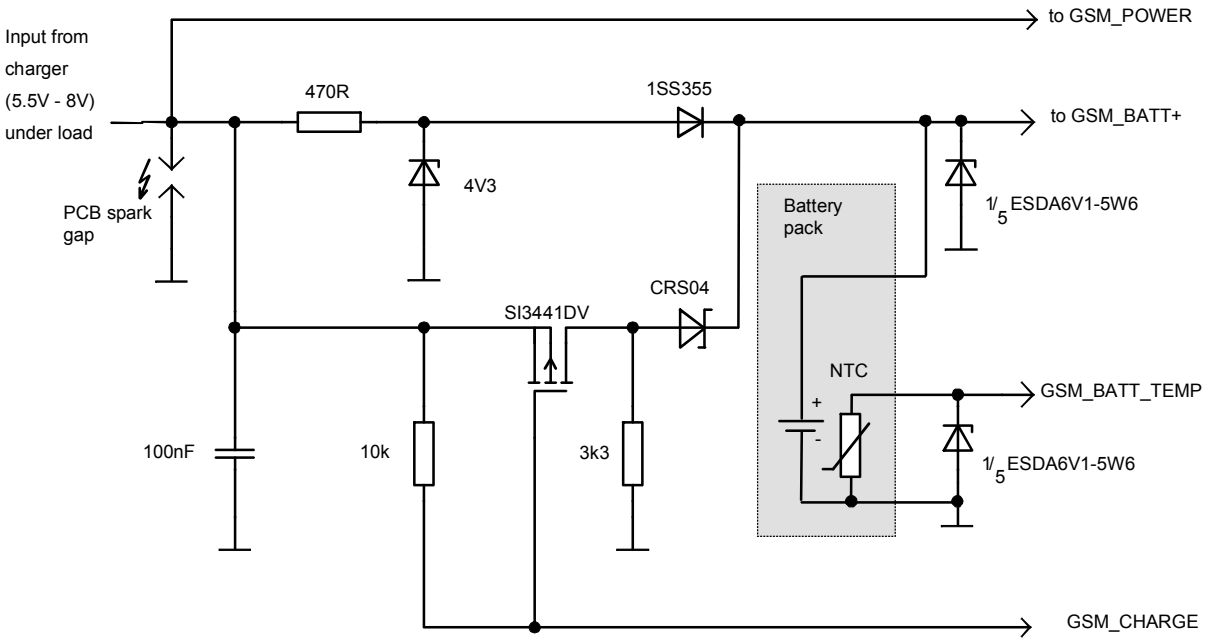

Figure 7: Schematic of approved charging transistor, trickle charging and ESD protection

Table 7: Bill of material for external charging circuit

Part	Description	First supplier	Second supplier
SI3441DV	p-chan 2.5V (G-S) MOSFET (TSOP-6)	VISHAY: SI3441DV-T1	NEC: UPA1911TE-T1
1SS355	100mA Si-diode (UMD2)	ROHM: 1SS355TE-18	Toshiba: 1SS352TPH3
CRS04	1A Schottky diode	Toshiba: CRS04	-
4V3	250mW; 200mA; 4.3V Z-Diode (SOD323)	Philips: PDZ4.3B	ROHM: UDZS4.3B UDZ4.3B
ESDA6V1-5W6	ESD protection TRANSIL™ array	STM: ESDA6V1-5W6	-
470R, 3k3, 10k	Resistor, e.g. 0805 or 0603	-	-
100nF	Ceramic capacitor 50V	-	-
PCB spark gap	0.2mm spark gap on PCB	-	-

3.5.1 Battery pack characteristics

The charging algorithm has been optimized for a Li-Ion battery pack that meets the characteristics listed below. It is recommended that the battery pack you want to integrate into your XT55/56 application is compliant with these specifications. This ensures reliable operation, proper charging and, particularly, allows you to monitor the battery capacity using the AT^SBC command (see [1] for details). Failure to comply with these specifications might cause AT^SBC to deliver incorrect battery capacity values. A battery pack especially designed to operate with XT55/56 modules is specified in Chapter 3.5.2.

- Li-Ion battery pack specified for a maximum charging voltage of 4.2 V and a capacity of 800 mAh. Battery packs with a capacity down to 600 mAh or more than 800 mAh are allowed, too.
- Since charging and discharging largely depend on the battery temperature, the battery pack should include an NTC resistor. If the NTC is not inside the battery it must be in thermal contact with the battery. The NTC resistor must be connected between GSM_BATT_TEMP and GND. Required NTC characteristics are: *10 kΩ ±5% @ 25°C,* $B_{25/85}$ *= 3435K ±3%* (alternatively acceptable: *10 kΩ ±2% @ 25°C,* $B_{25/50}$ *= 3370K ±3%)*. Please note that the NTC is indispensable for proper charging, i.e. the charging process will not start if no NTC is present.
- Ensure that the pack incorporates a protection circuit capable of detecting overvoltage (protection against overcharging), undervoltage (protection against deep discharging) and overcurrent. The circuit must be insensitive to pulsed current.
- On the XT55/56 module, a built-in measuring circuit constantly monitors the supply voltage. In the event of undervoltage, it causes XT55/56 to power down. Undervoltage thresholds are specific to the battery pack and must be evaluated for the intended model. When you evaluate undervoltage thresholds, consider both the current consumption of XT55/56 and of the application circuit.
- The internal resistance of the battery and the protection should be as low as possible. It is recommended not to exceed 150mΩ, even in extreme conditions at low temperature. The battery cell must be insensitive to rupture, fire and gassing under extreme conditions of temperature and charging (voltage, current).
- The battery pack must be protected from reverse pole connection. For example, the casing should be designed to prevent the user from mounting the battery in reverse orientation.
- The battery pack must be approved to satisfy the requirements of CE conformity.

Figure 8 shows the circuit diagram of a typical battery pack design that includes the protection elements described above.

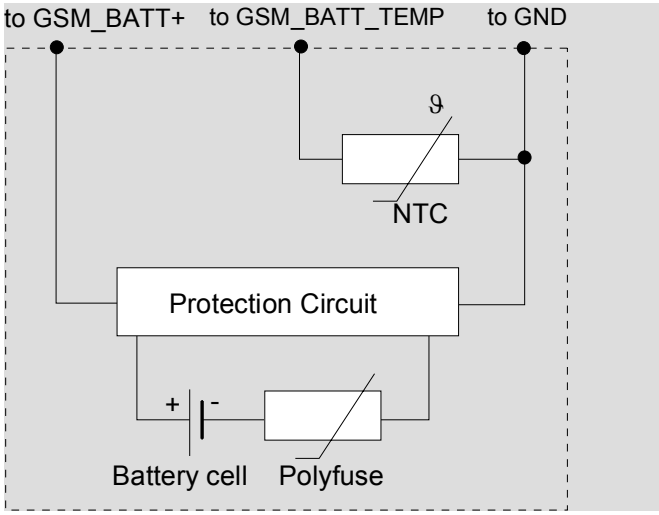

Figure 8: Battery pack circuit diagram

3.5.2 Recommended battery pack specification

Table 8: Specifications of recommended battery pack

Battery type	Li-Ion
Nominal voltage	3.6V
Capacity	800mAh
NTC	10kΩ ± 5% @ 25°C, B (25/85)=3435K ± 3%
Overcharge detection voltage	4.325 ± 0.025V
Overcharge release voltage	4.075 ± 0.025V
Overdischarge detection voltage	2.5 ± 0.05V
Overdischarge release voltage	2.9 ± 0.5V
Overcurrent detection	3 ± 0.5A
Nominal working current	<5µA
Current of low voltage detection	0.5µA
Overcurrent detection delay time	8~16ms
Short detection delay time	50µs
Overdischarge detection delay time	31~125ms
Overcharge detection delay time	1s
Internal resistance	<130mΩ

3.5.3 Implemented charging technique

If the external charging circuit follows the recommendation of Figure 7, the charging process consists of trickle charging and processor controlled fast charging. For this solution, the fast charging current provided by the charger or any other external source must be limited to 500mA.

Trickle charging

- Trickle charging starts when the charger is connected to the charger input of the external charging circuit and the module's GSM_POWER pin. The charging current depends on the voltage difference between the charger input of the external charging circuit and GSM_BATT+ of the module.
- Trickle charging stops when the battery voltage reaches 3.6V.

Fast charging

- After trickle charging has raised the battery voltage to 3.2V within 60 minutes ±10% from connecting the charger, the power ASIC turns on and wakes up the baseband processor. Now, processor controlled fast charging begins.
  If the battery voltage was already above 3.2V, processor controlled fast charging starts just after the charger was connected to the charger input of the external charging circuit and the module's GSM_POWER pin. If the GSM part of the XT55/56 was in POWER DOWN mode, it turns on and enters the Charge-only mode along with fast charging (see also Chapter 3.3.1.3).
  Fast charging delivers a constant current until the battery voltage reaches 4.2V and then proceeds with varying charge pulses. As shown in Figure 5, the pulse duty cycle is reduced to adjust the charging procedure and prevent the voltage from overshooting beyond 4.2V. Once the pulse width reaches the minimum of 100ms and the duty cycle does not change for 2 minutes, fast charging is completed.
  After the end of charging the battery voltage falls due to discharging. Once the voltage falls below 4.0V (approximately), the charging process begins again.
- Fast charging can only be accomplished in a temperature range from 0°C to +45°C.

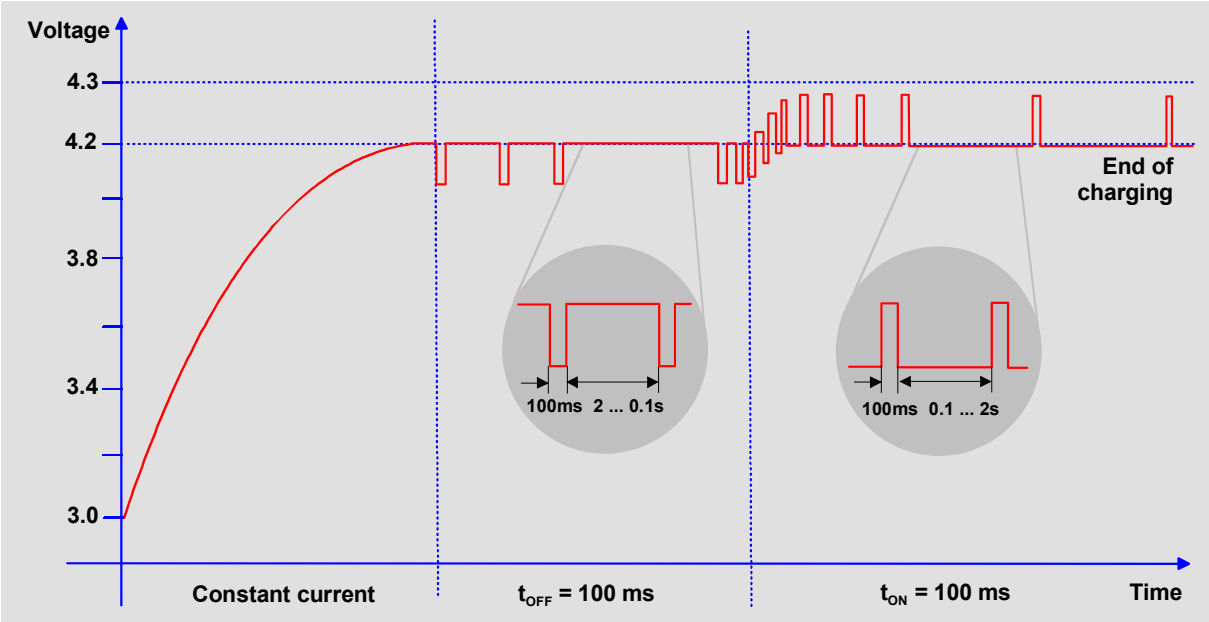

Figure 9: Charging process

Note: Do not connect the charger to the GSM_BATT+ lines. Only the charger input of the external charging circuit is intended as input for charging current! The GSM_POWER pin of XT55/56 is the input only for indicating a connected charger! The battery manufacturer must guarantee that the battery complies with the described charging technique.

What to do if software controlled charging does not start up?
If trickle charging fails to raise the battery voltage to 3.2V within 60 minutes ±10%, processor controlled charging does not begin. To start fast charging you can do one of the following:

- Once the voltage has risen above its minimum of 3V, you can try to start software controlled charging by pulling the GSM_IGT line to ground.
- If the voltage is still below 3V, driving the GSM_IGT line to ground switches the timer off. Without the timer running, the GSM part of the XT55/56 module will not proceed to software controlled charging. To restart the timer you are required to shortly disconnect and reconnect the charger.

3.5.4 Operating modes during charging

Of course, the battery can be charged regardless of the engine's operating mode. When the GSM engine is in Normal mode (SLEEP, IDLE, TALK, GPRS IDLE or GPRS DATA mode), it remains operational while charging is in progress (provided that sufficient voltage is applied). The charging process during the Normal mode is referred to as *Charge mode*.

If the charger is connected to the charger input of the external charging circuit and the module's GSM_POWER pin while GSM part of XT55/56 is in POWER DOWN mode, the GSM part of the XT55/56 goes into *Charge-only* mode.

Table 9: Comparison Charge-only and Charge mode

	How to activate mode	Features
Charge mode	Connect charger to charger input of external charging circuit and module's GSM_POWER pin while the GSM part of the XT55/56 is • operating, e.g. in IDLE or TALK mode • in SLEEP mode	• Battery can be charged while GSM engine remains operational and registered to the GSM network. • In IDLE and TALK mode, the serial interfaces are accessible. AT command set can be used to full extent. • In the NON-CYCLIC SLEEP mode, the serial interfaces are not accessible at all. During the CYCLIC SLEEP mode they can be used as described in Chapter 3.6.3.
Charge-only mode	Connect charger to charger input of external charging circuit and module's GSM_POWER pin while the GSM part of the XT55/56 is • in POWER DOWN mode • in Normal mode: Connect charger to the GSM_POWER pin, then enter AT^SMSO. IMPORTANT: While trickle charging is in progress, be sure that the application is switched off. If the application is fed from the trickle charge current the module might be prevented from proceeding to software controlled charging since the current would not be sufficient.	• Battery can be charged while GSM engine is deregistered from GSM network. • Charging runs smoothly due to constant current consumption. • The AT interface is accessible and allows to use the commands listed below.

Features of Charge-only mode
Once the GSM engine enters the Charge-only mode, the AT command interface presents an Unsolicited Result Code (URC) which reads:

^SYSSTART CHARGE-ONLY MODE

Note that this URC will not appear when autobauding was activated (due to the missing synchronization between DTE and DCE upon start-up). Therefore, it is recommended to select a fixed baudrate before using the Charge-only mode.

While the Charge-only mode is in progress, you can only use the AT commands listed in Table 10. For further instructions refer to the AT Command Set supplied with your GSM engine.

Table 10: AT commands available in Charge-only mode

AT command	Function
AT+CALA	Set alarm time
AT+CCLK	Set date and time of RTC
AT^SBC	Monitor charging process Note: While charging is in progress, no battery capacity value is available. To query the battery capacity disconnect the charger. If the charger connects *externally* to the host device no charging parameters are transferred to the module. In this case, the command cannot be used.
AT^SCTM	Query temperature range, enable/disable URCs to report critical temperature ranges
AT^SMSO	Power down GSM engine

To proceed from Charge-only mode to normal operation, it is necessary to drive the ignition line to ground. This must be implemented in your host application as described in Chapter 3.3.1.1. See also Chapter 3.7 which summarizes the various options of changing the mode of operation.
If your host application uses the GSM_SYNC pin to control a status LED as described in Chapter 3.12.2.2, please note that the LED is off while the GSM engine is in Charge-only mode.

3.5.5 Charger requirements

If you are using the implemented charging technique and the charging circuit recommended in Figure 7, the charger must be designed to meet the following requirements:

a) Simple transformer power plug
- Output voltage: 5.5V...8V (under load)
- The charge current must be limited to 500mA
- Voltage spikes that may occur while you connect or disconnect the charger must be limited.
- There must not be any capacitor on the secondary side of the power plug (avoidance of current spikes at the beginning of charging)

b) Supplementary requirements for a) to ensure a regulated power supply
- When current is switched off a voltage peak of 10V is allowed for a maximum 1ms
- When current is switched on a spike of 1.6A for 1ms is allowed

3.6 Power saving

SLEEP mode reduces the functionality of the GSM part of the XT55/56 module to a minimum and, thus, minimizes the current consumption to the lowest level. Settings can be made using the AT+CFUN command. For details see below and [1]. SLEEP mode falls into two categories:

- NON-CYCLIC SLEEP mode AT+CFUN=0
- CYCLIC SLEEP modes, selectable with AT+CFUN=5, 6, 7, 8 or 9.

IMPORTANT: Please keep in mind that power saving works properly only when PIN authentication has been done. If you attempt to activate power saving while the SIM card is not inserted or the PIN not correctly entered (Limited Service), the selected <fun> level will be set, though power saving does not take effect. For the same reason, power saving cannot be used if the GSM part of the XT55/56 operates in Alarm mode.

To check whether power saving is on, you can query the status of AT+CFUN if you have chosen CYCLIC SLEEP mode. If available, you can take advantage of the status LED controlled by the GSM_SYNC pin (see Chapter 3.12.2.2). The LED is off in all SLEEP modes when no activity occurs, but resumes flashing to indicate temporary wake-up states during CYLCIC SLEEP modes. The LED patterns are shown in Table 18.

The wake-up procedures are quite different depending on the selected SLEEP mode. Table 11 compares the wake-up events that can occur in NON-CYCLIC and CYCLIC SLEEP modes.

3.6.1 No power saving (AT+CFUN=1)

The functionality level <fun>=1 is where power saving is switched off. This is the default after startup.

3.6.2 NON-CYCLIC SLEEP mode (AT+CFUN=0)

If level 0 has been selected (AT+CFUN=0), the serial interface is blocked. The module shortly deactivates power saving to listen to a paging message sent from the base station and then immediately resumes power saving. Level 0 is called NON-CYCLIC SLEEP mode, since the serial interface is not alternatingly made accessible as in CYCLIC SLEEP mode.

The first wake-up event fully activates the module, enables the serial interface and terminates the power saving mode. In short, it takes the GSM part of the XT55/56 back to the highest level of functionality <fun>=1. GSM_RTS0 or GSM_RTS1 are not used for flow control, but to wake up the module.

3.6.3 CYCLIC SLEEP mode (AT+CFUN=5, 6, 7, 8)

The major benefit over the NON-CYCLIC SLEEP mode is that the serial interface is not permanently blocked and that packet switched calls may go on without terminating the selected CYCLIC SLEEP mode. This allows the GSM part of the XT55/56 to become active, for example to perform a GPRS data transfer, and to resume power saving after the GPRS data transfer is completed.

The CYCLIC SLEEP modes give you greater flexibility regarding the wake-up procedures: For example, in all CYCLIC SLEEP modes, you can enter AT+CFUN=1 to permanently wake up the module. In modes CFUN=7 and 8, the GSM part of the XT55/56 automatically resumes power saving, after you have sent or received a short message or made a call. CFUN=5 and 6 do not offer this feature, and therefore, are only supported for compatibility with earlier releases. Please refer to Table 11 for a summary of all modes.

The CYCLIC SLEEP mode is a dynamic process which alternatingly enables and disables the serial interface. By setting/resetting the GSM_CTS signal, the module indicates to the application whether or not the UART is active. The timing of GSM_CTS is described below.

Both the application and the module must be configured to use hardware flow control (RTS/CTS handshake). The default setting of the GSM part of the XT55/56 is AT\Q0 (no flow control) which must be altered to AT\Q3. See [1] for details.

Note: If both serial interfaces ASC0 and ASC1 are connected, both are synchronized. This means that SLEEP mode takes effect on both, no matter on which interface the AT command was issued. Although not explicitly stated, all explanations given in this chapter refer equally to ASC0 and ASC1, and accordingly to GSM_CTS0 and GSM_CTS1.

3.6.4 CYCLIC SLEEP mode AT+CFUN=9

Mode AT+CFUN=9 is similar to AT+CFUN=7 or 8, but provides two additional features:

- GSM_RTS0 and GSM_RTS1 are not intended for flow control (as in modes AT+CFUN=5, 6, 7 or 8), but can be used to temporarily wake up the module. This way, the module can quickly wake up and resume power saving, regardless of the GSM_CTS timing controlled by the paging cycle.
- The time the module stays active after GSM_RTS was asserted or after the last character was sent or received, can be configured individually using the command AT^SCFG. Default setting is 2 seconds like in AT+CFUN=7. The entire range is from 0.5 seconds to 1 hour, selectable in tenths of seconds. For details see [1].

3.6.5 Timing of the GSM_CTS signal in CYCLIC SLEEP modes

The GSM_CTS signal is enabled in synchrony with the module's paging cycle. It goes active low each time when the module starts listening to a paging message block from the base station. The timing of the paging cycle varies with the base station. The duration of a paging interval can be calculated from the following formula:

*4.615 ms (TDMA frame duration) * 51 (number of frames) * DRX value*.

DRX (Discontinuous Reception) is a value from 2 to 9, resulting in paging intervals from 0.47 to 2.12 seconds. The DRX value of the base station is assigned by the network operator.

Each listening period causes the GSM_CTS signal to go active low: If DRX is 2, the GSM_CTS signal is activated every 0.47 seconds, if DRX is 3, the GSM_CTS signal is activated every 0.71 seconds and if DRX is 9, the GSM_CTS signal is activated every 2.1 seconds.

The GSM_CTS signal is active low for 4.6 ms. This is followed by another 4.6 ms UART activity. If the start bit of a received character is detected within these 9.2 ms, GSM_CTS will

be activated and the proper reception of the character will be guaranteed.
GSM_CTS will also be activated if any character is to be sent.

After the last character was sent or received the interface will remain active for

- another 2 seconds, if AT+CFUN=5 or 7,
- another 10 minutes, if AT+CFUN=6 or 8,
- or for an individual time defined with AT^SCFG, if AT+CFUN=9. Assertion of GSM_RTS has the same effect.

In the pauses between listening to paging messages, while GSM_CTS is high, the module resumes power saving and the AT interface is not accessible. See Figure 10 and Figure 11.

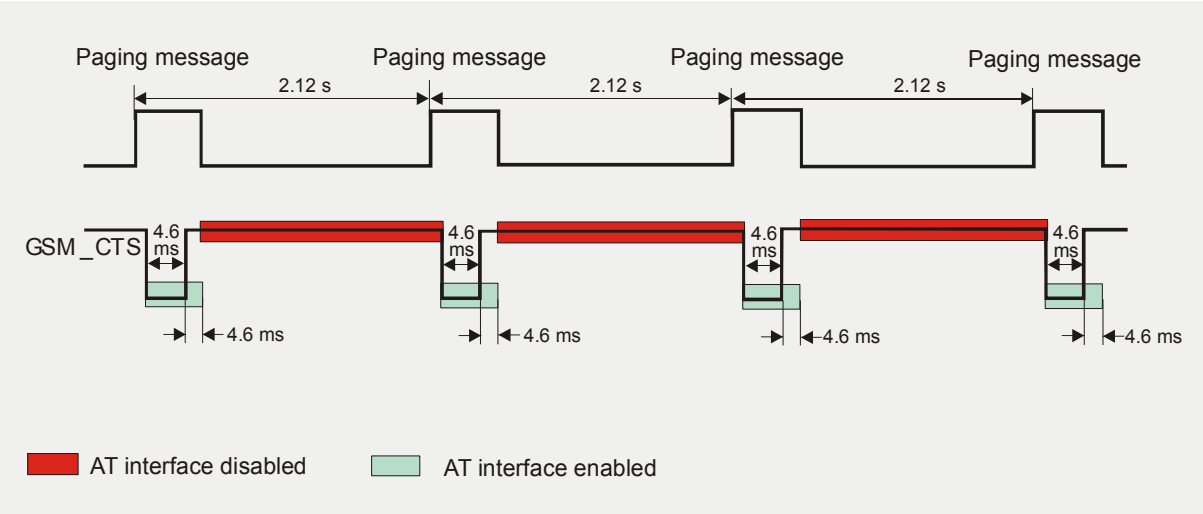

Figure 10: Timing of CTS signal (example for a 2.12 s paging cycle)

Figure 11 illustrates the CFUN=5 and CFUN=7 modes, which reset the GSM_CTS signal 2 seconds after the last character was sent or received.

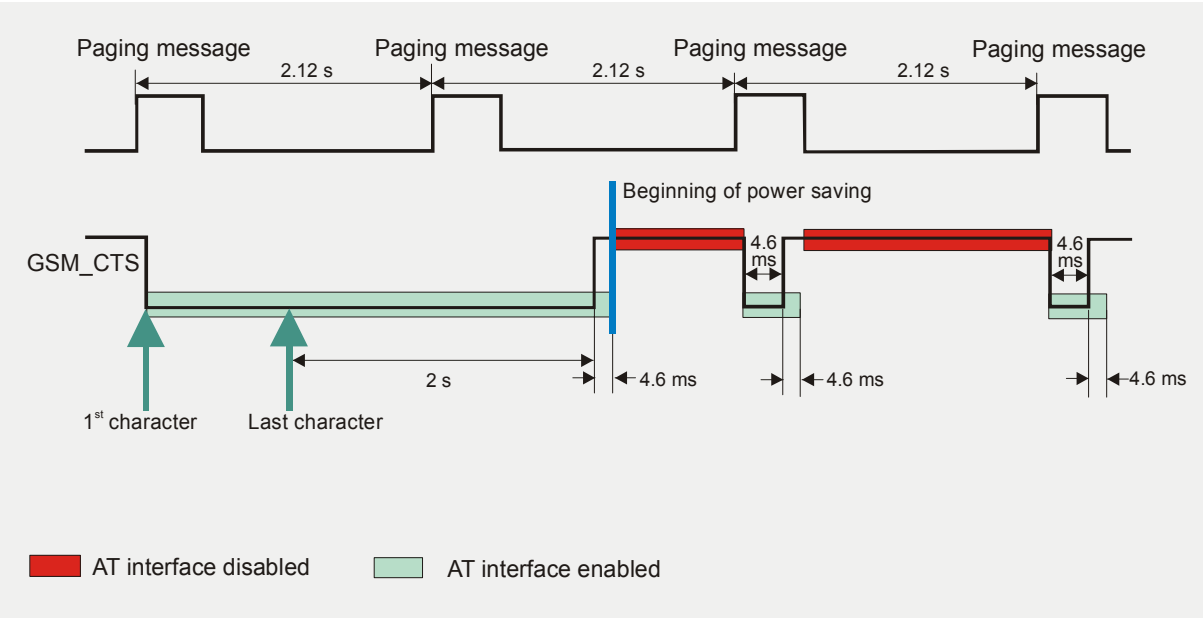

Figure 11: Beginning of power saving if CFUN=5 or 7

3.6.6 Wake up XT55/56 from SLEEP mode

A wake-up event is any event that causes the module to draw current. Depending on the selected mode the wake-up event either switches SLEEP mode off and takes XT55/56 back to AT+CFUN=1, or activates XT55/56 temporarily without leaving the current SLEEP mode.

Definitions of the state transitions described in Table 11:

Quit = XT55/56 exits SLEEP mode and returns to AT+CFUN=1.

Temporary = XT55/56 becomes active temporarily for the duration of the event and the mode-specific follow-up time after the last character was sent or received on the serial interface.

No effect: = Event is not relevant in the selected SLEEP mode. XT55/56 does not wake up.

Table 11: Wake-up events in NON-CYCLIC and CYCLIC SLEEP modes

Event	Selected mode AT+CFUN=0	Selected mode AT+CFUN=5 or 6	Selected mode AT+CFUN=7, 8, 9
Ignition line	No effect	No effect	No effect
GSM_RTS0 or GSM_RTS1 [1] (falling edge)	Quit	No effect (GSM_RTS is only used for flow control)	Mode 7 and 8: No effect (GSM_RTS is only used for flow control) Mode 9: Temporary
Unsolicited Result Code (URC)	Quit	Quit	Temporary
Incoming voice or data call	Quit	Quit	Temporary
Any AT command (incl. outgoing voice or data call, outgoing SMS)	Not possible (UART disabled)	Temporary	Temporary
Incoming SMS depending on mode selected by AT+CNMI:			
AT+CNMI=0,0 (= default, no indication of received SMS)	No effect	No effect	No effect
AT+CNMI=1,1 (= displays URC upon receipt of SMS)	Quit	Quit	Temporary
GPRS data transfer	Not possible (UART disabled)	Temporary	Temporary
RTC alarm	Quit[2]	Quit	Temporary
AT+CFUN=1	Not possible (UART disabled)	Quit	Quit

[1] During the CYCLIC SLEEP modes 5, 6, 7, and 8, GSM_RTS0 and GSM_RTS1 are conventionally used for flow control: The assertion of GSM_RTS0 or GSM_RTS1 signals that the application is ready to receive data - without waking up the module. If the module is in CFUN=0 mode the assertion of GSM_RTS0 and GSM_RTS1 serves as a wake-up event, giving the application the possibility to intentionally terminate power saving. If the module is in CFUN=9 mode, the assertion of GSM_RTS0 or

GSM_RTS1 can be used to temporarily wake up XT55/56 for the time specified with the AT^SCFG command (default = 2s).

2) Recommendation: In NON-CYCLIC SLEEP mode, you can set an RTC alarm to wake up XT55/56 and return to full functionality. This is a useful approach because, in this mode, the AT interface is not accessible.

3.7 Summary of state transitions (except SLEEP mode)

Table 12: State transitions of XT55/56 (except SLEEP mode)

The table shows how to proceed from one GSM mode to another (grey column = present mode, white columns = intended modes)

Further mode ➔➔➔ Present mode	POWER DOWN	Normal mode**)	Charge-only mode*)	Charging in normal mode*)**)	Alarm mode
POWER DOWN mode without charger	---	GSM_IGT >100 ms at low level	Connect charger to input of ext. charging circuit and GSM_POWER pin (high level at GSM_POWER)	No direct transition, but via "Charge-only mode" or "Normal mode"	Wake-up from POWER DOWN mode (if activated with AT+CALA)
POWER DOWN mode with charger (high level at GSM_POWER pin of XT55/56)	---	GSM_IGT >1 s at low level, if battery is fully charged	100ms < GSM_IGT < 500ms at low level	GSM_IGT >1 s at low level	Wake-up from POWER DOWN mode (if activated with AT+CALA)
Normal mode**)	AT^SMSO or exceptionally GSM_EMERGOFF pin > 3.2s at low level	---	No automatic transition, but via "POWER DOWN"	Connect charger to GSM_POWER pin at XT55/56 (high level at GSM_POWER)	AT+CALA followed by AT^SMSO. XT55/56 enters Alarm mode when specified time is reached.
Charge-only mode *)	Disconnect charger (XT55/56 GSM_POWER pin at low level) or AT^SMSO or exceptionally GSM_EMERGOFF pin ≥3.2s at low level	No automatic transition, but via "Charge in Normal mode"	---	GSM_IGT >1s at low level	AT+CALA followed by AT^SMSO. XT55/56 enters Alarm mode when specified time is reached and $V_{GSM_BATT+} \geq 3.2V$
Charging in normal mode*) **)	AT^SMSO ➔ "Charge-only mode", again AT^SMSO or exceptionally GSM_EMERGOFF pin ≥3.2s at low level	Disconnect charger from input of ext. charging circuit and module's GSM_POWER pin	AT^SMSO	---	No direct transition
Alarm mode	AT^SMSO or exceptionally GSM_EMERGOFF pin ≥3.2s at low level	GSM_IGT >100ms at low level	AT^SMSO if charger is connected	GSM_IGT >100ms at low level	---

*) See Chapter 3.5.4 for details on the charging mode

**) Normal mode covers TALK, DATA, GPRS, IDLE and SLEEP modes

3.8 RTC backup for GSM part of XT55/56

The internal Real Time Clock of the XT55/56 GSM part is supplied from a separate voltage regulator in the power supply ASIC which is also active when the GSM part of the XT55/56 is in POWER DOWN status. An alarm function is provided that allows to wake up XT55/56 without logging on to the GSM network.

In addition, you can use the GSM_VDDLP pin on the board-to-board connector to backup the RTC from an external capacitor or a battery (rechargeable or non-chargeable). The capacitor is charged by the GSM_BATT+ line of XT55/56. If the voltage supply at GSM_BATT+ is disconnected the RTC can be powered by the capacitor. The size of the capacitor determines the duration of buffering when no voltage is applied to the GSM part of the XT55/56, i.e. the greater capacitor the longer the GSM part of the XT55/56 will save the date and time.

The following figures show various sample configurations. The voltage applied at GSM_VDDLP can be in the range from 2 to 5.5V. Please refer to Table 27 for the parameters required.

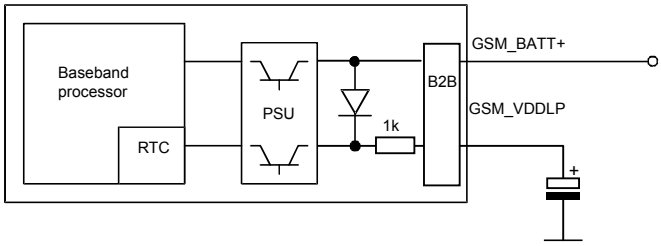

Figure 12: RTC supply from capacitor

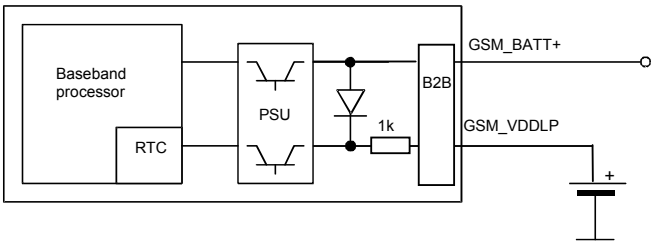

Figure 13: RTC supply from rechargeable battery

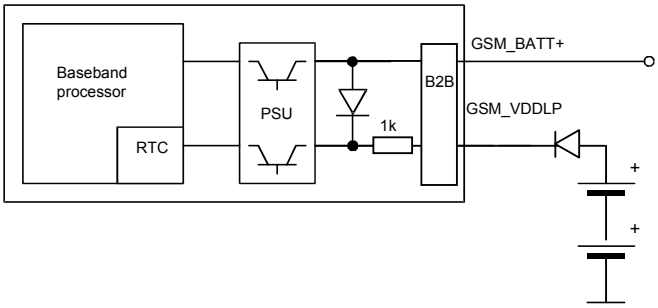

Figure 14: RTC supply from non-chargeable battery

3.9 Serial interfaces of the XT55/56 GSM part

The GSM part of the XT55/56 module offers two unbalanced, asynchronous serial interfaces conforming to ITU-T V.24 protocol DCE signaling. The electrical characteristics do not comply with ITU-T V.28. The significant levels are 0V (for low data bit or ON condition) and 2.65V (for high data bit or OFF condition). For electrical characteristics please refer to Table 38. Figure 1 shows the serial interfaces of the XT55/56 module.

The GSM engine is designed for use as a DCE. Based on the conventions for DCE-DTE connections it communicates with the customer application (DTE) using the following signals:

ASC0
- Port TXD @ application sends data to the module's GSM_TXD0 signal line
- Port RXD @ application receives data from the module's GSM_RXD0 signal line

ASC1
- Port TXD @ application sends data to module's GSM_TXD1 signal line
- Port RXD @ application receives data from the module's GSM_RXD1 signal line

3.9.1 Features supported on the first serial interface of GSM part (ASC0)

- 8-wire serial interface
- Includes the data lines GSM_TXD0 and GSM_RXD0, the status lines GSM_RTS0 and GSM_CTS0 and, in addition, the modem control lines GSM_DTR0, GSM_DSR0, GSM_DCD0 and GSM_RING0.
- It is primarily designed for voice calls, CSD calls, fax calls and GPRS services and for controlling the GSM engine with AT commands. Full Multiplex capability allows the interface to be partitioned into three virtual channels, yet with CSD and fax services only available on the first logical channel. Please note that when the ASC0 interface runs in Multiplex mode, ASC1 cannot be used. For more detailed characteristics see [12].
- The GSM_DTR0 signal will only be polled once per second from the internal firmware of XT55/56.
- The GSM_RING0 signal serves to indicate incoming calls and other types of URCs (Unsolicited Result Code). It can also be used to send pulses to the host application, for example to wake up the application from power saving state. For further details see Chapter 3.12.3.
- Autobauding is only selectable on ASC0 and supports the following bit rates: 1200, 2400, 4800, 9600, 19200, 38400, 57600, 115200, 230400 bps.
- Autobauding is not compatible with multiplex mode, see [12].
- ASC0 interface is intended for firmware upgrade of the GSM part

3.9.2 Features supported on the second serial interface of GSM part (ASC1)

- 4-wire serial interface
- Includes only the data lines GSM_TXD1 and GSM_RXD1 plus GSM_RTS1 and GSM_CTS1 for hardware handshake. This interface is intended for voice calls, GPRS services and for controlling the GSM engine with AT commands. It is not suited for CSD calls, fax calls and Multiplex mode.
- On ASC1 no GSM_RING line is available. The indication of URCs on the second interface depends on the settings made with the AT^SCFG command. For details refer to [1].

3.9.3 ASC0 and ASC1 configuration

- Both interfaces are configured for 8 data bits, no parity and 1 stop bit, and can be operated at bit rates from 300bps to 230400 bps.
- XON/XOFF software flow control can be used on both interfaces (except if power saving is active).

Table 13: DCE-DTE wiring of 1st serial interface (GSM part)

V.24 circuit	DCE (XT55/56)		DTE (application)	
	Pin function	**Signal direction**	**Pin function**	**Signal direction**
103	GSM_TXD0	Input	/TXD	Output
104	GSM_RXD0	Output	/RXD	Input
105	GSM_RTS0	Input	/RTS	Output
106	GSM_CTS0	Output	/CTS	Input
108/2	GSM_DTR0	Input	/DTR	Output
107	GSM_DSR0	Output	/DSR	Input
109	GSM_DCD0	Output	/DCD	Input
125	GSM_RING0	Output	/RING	Input

Table 14: DCE-DTE wiring of 2nd serial interface (GSM part)

V.24 circuit	DCE (XT55/56)		DTE (application)	
	Pin function	**Signal direction**	**Pin function**	**Signal direction**
103	GSM_TXD1	Input	/TXD	Output
104	GSM_RXD1	Output	/RXD	Input
105	GSM_RTS1	Input	/RTS	Output
106	GSM_CTS1	Output	/CTS	Input

3.10 Audio interfaces

XT55/56 comprises three audio interfaces available on the board-to-board connector:

- Two analog audio interfaces, each with a balanced analog microphone input and a balanced analog earpiece output. The second analog interface provides a supply circuit to feed an active microphone.
- Serial digital audio interface (DAI) using PCM (Pulse Code Modulation) to encode analog voice signals into digital bit streams.

This means you can connect up to three audio devices in any combination, although analog and digital audio cannot be operated at the same time. Using the AT^SAIC command you can easily switch back and forth.

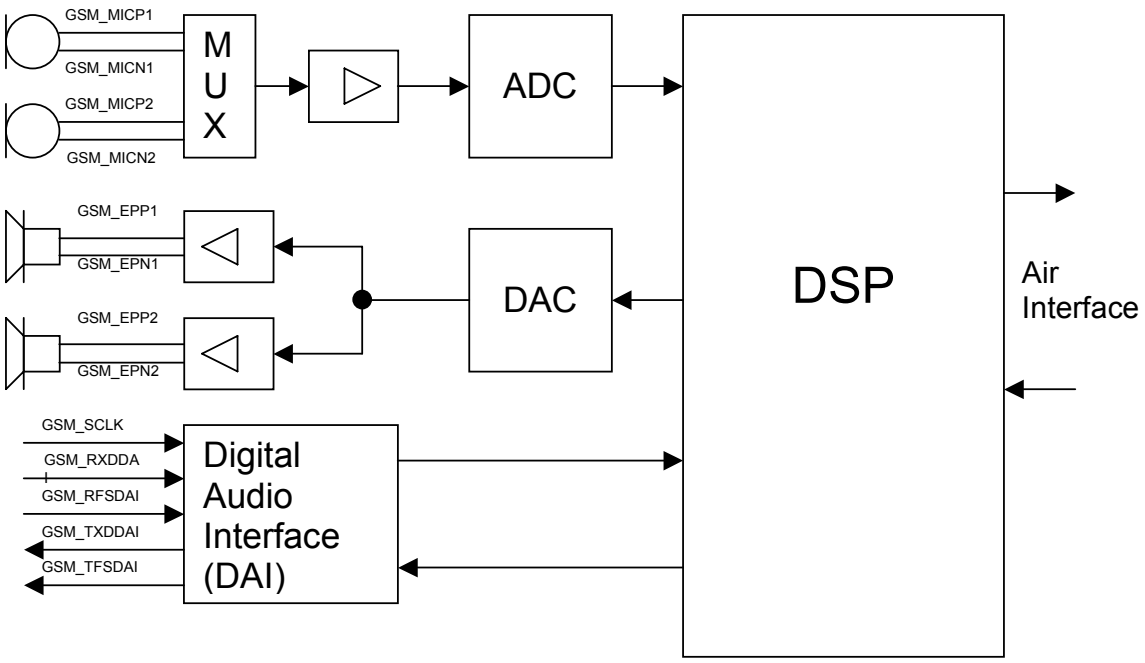

Figure 15: Audio block diagram

XT55/56 offers six audio modes which can be selected with the AT^SNFS command, no matter which of the three interfaces is currently active. The electrical characteristics of the voiceband part vary with the audio mode. For example, sending and receiving amplification, sidetone paths, noise suppression etc. depend on the selected mode and can be altered with AT commands (except for mode 1).

On each audio interface you can use all audio AT commands specified in [1] to alter parameters. The only exception are the DAC and ADC gain amplifier attenuation <outBbcGain> and <inBbcGain> which cannot be modified when the digital audio interface is used, since in this case the DAC and ADC are switched off.

Please refer to Chapter 3.10 for specifications of the audio interface and an overview of the audio parameters. Detailed instructions on using AT commands are presented in [1]. Table 31 on page 104 summarizes the characteristics of the various audio modes and shows what parameters are supported in each mode.

When shipped from factory, all audio parameters of XT55/56 are set to interface 1 and audio mode 1. This is the default configuration optimized for the Votronic HH-SI-30.3/V1.1/0 handset and used for type approving the Siemens reference configuration. Audio mode 1 has fix parameters which cannot be modified. To adjust the settings of the Votronic handset simply change to another audio mode.

In transmit direction, all audio modes contain internal scaling factors (digital amplification) that are not accessible by the user. To avoid saturation with a full scale digital input signal on the DAI, and to obtain a one-to-one digital access to the speech coder in audio mode 5 and 6, it is recommended to set the parameter <inCalibrate> of the selected audio mode as follows:

Audio mode 1 and 4:	23196
Audio mode 2:	17396
Audio mode 3:	21901
Audio mode 5 and 6:	21402

3.10.1 Microphone circuit

Interface 1

This interface has no microphone supply circuit and therefore, has an impedance of 50kΩ. When connecting a microphone or another signal source to interface 1 you are required to add two 100 nF capacitors, one to each line.

Interface 2

This interface comes with a microphone supply circuit and can be used to feed an active microphone. It has an impedance of 2kΩ. If you do not use it or if you want to connect another type of signal source, for example, an op amp or a dynamic microphone, it needs to be decoupled with capacitors. The power supply can be switched off and on by using the command AT^SNFM. For details see [1].

Figure 16 shows the microphone inputs at both analog interfaces of XT55/56.

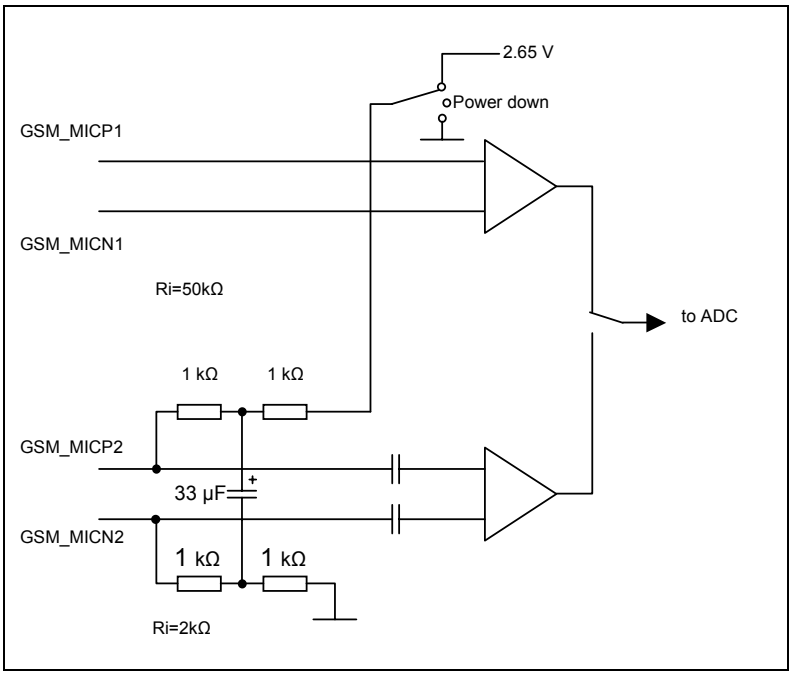

Figure 16: Schematic of microphone inputs

3.10.2 Speech processing

The speech samples from the ADC or DAI are handled by the DSP of the baseband controller to calculate e.g. amplifications, sidetone, echo cancellation or noise suppression depending on the configuration of the active audio mode. These processed samples are passed to the speech encoder. Received samples from the speech decoder are passed to the DAC or DAI after post processing (frequency response correction, adding sidetone etc.).

Full rate, half rate, enhanced full rate, adaptive multi rate (AMR), speech and channel encoding including voice activity detection (VAD) and discontinuous transmission (DTX) and digital GMSK modulation are also performed on the GSM baseband processor.

Customer specific audio parameters can be evaluated and supplied by Siemens on request. These parameters can be downloaded to XT55/56 using an AT command. For further information refer to [9] or contact your Siemens distributor.

3.10.3 DAI timing

To support the DAI function, XT55/56 integrates a simple five-line serial interface with one input data clock line (GSM_SCLK) and input / output data and frame lines (GSM_TXDDAI, GSM_TFSDAI, GSM_RXDDAI, GSM_RFSDAI).

The serial interface is always active if the external input data clock GSM_SLCK is present, i.e. the serial interface is not clocked by the DSP of the XT55/56 baseband processor. GSM_SLCK must be supplied from the application and can be in a frequency range between 0.2 and 10 MHz. Serial transfer of 16-bit words is done in both directions.

Data transfer to the application is initiated by the module via a short pulse of GSM_TFSDAI. The duration of the GSM_TFSDAI pulse is one GSM_SCLK period, starting at the rising edge of SLCK. During the following 16 SLCK cycles, the 16-bit sample will be transferred on the GSM_TXDDAI line. The next outgoing sample will be transferred after the next GSM_TFSDAI pulse which occurs every 125 µs.

The GSM_TFSDAI pulse is the master clock of the sample transfer. From the rising edge of the GSM_TFSDAI pulse, the application has 100 µs to transfer the 16-bit input sample on the GSM_RXDDAI line. The rising edge of the GSM_RFSDAI pulse (supplied by the application) may coincide with the falling edge of GSM_TFSDAI or occur slightly later - it is only significant that, in any case, the transfer of the LSB input sample will be completed within the specified duration of 100 µs.

Audio samples are transferred from the module to the application in an average of 125µs. This is determined by the 8kHz sampling rate, which is derived from and synchronized to the GSM network. As SLCK is independent of the GSM network, the distance between two succeeding sample transfers may vary about ± 1 SLCK period.

The application is required to adapt its sampling rate to the GSM_TFSDAI rate. Failure to synchronize the timing between the module and the application may cause audible pops and clicks in a conversation. The timing characteristics of both data transfer directions are shown in Figure 17 and Figure 18.

Note: Before starting the data transfer the clock GSM_SCLK should be available for at least three cycles.
After the transfer of the LSB0 the clock GSM_SCLK should be still available for at least three cycles.

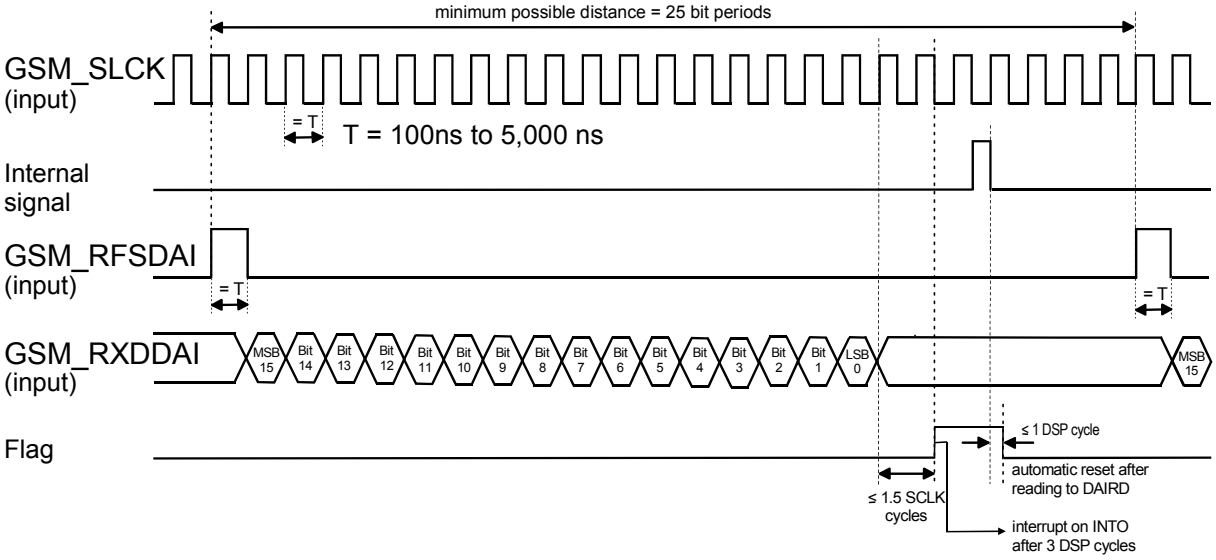

Figure 17: DAI timing on transmit path

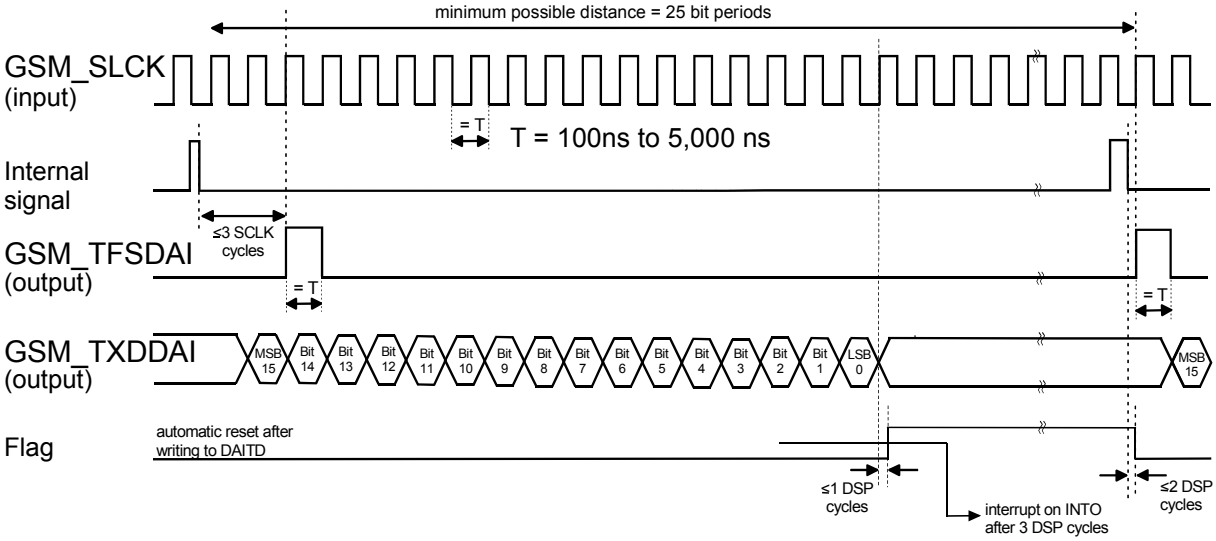

Figure 18: DAI timing on receive path

3.11 SIM interface

The baseband processor has an integrated SIM interface compatible with the ISO 7816 IC Card standard. This is wired to the host interface (board-to-board connector) in order to be connected to an external SIM card holder. Six pins on the board-to-board connector are reserved for the SIM interface.

The GSM_CCIN pin serves to detect whether a tray (with SIM card) is present in the card holder. Using the GSM_CCIN pin is mandatory for compliance with the GSM 11.11 recommendation if the mechanical design of the host application allows the user to remove the SIM card during operation. See Chapter 3.11.1 for details.

Table 15: Signals of the SIM interface (board-to-board connector)

Signal	Description
GSM_CCGND	Separate ground connection for SIM card to improve EMC.
GSM_CCCLK	Chipcard clock, various clock rates can be set in the baseband processor.
GSM_CCVCC	SIM supply voltage from PSU-ASIC
GSM_CCIO	Serial data line, input and output.
GSM_CCRST	Chipcard reset, provided by baseband processor.
GSM_CCIN	Input on the baseband processor for detecting a SIM card tray in the holder. The GSM_CCIN pin is mandatory for applications that allow the user to remove the SIM card during operation. The GSM_CCIN pin is solely intended for use with a SIM card. It must not be used for any other purposes. Failure to comply with this requirement may invalidate the type approval of XT55/56.

It is recommended that the total cable length between the board-to-board connector pins on XT55/56 and the pins of the SIM card holder does not exceed 200 mm in order to meet the specifications of 3GPP TS 51.010-1 and to satisfy the requirements of EMC compliance.

To avoid possible cross-talk from the GSM_CCCLK signal to the GSM_CCIO signal be careful that both lines are not placed closely next to each other. A useful approach is using the GSM_CCGND line to shield the GSM_CCIO line from the GSM_CCCLK line. Furthermore connect a 47 pF capacitor from the GSM_CCIO to the GSM_CCGND line.

3.11.1 Requirements for using the GSM_CCIN pin

According to ISO/IEC 7816-3 the SIM interface must be immediately shut down once the SIM card is removed during operation. Therefore, the signal at the GSM_CCIN pin must go low *before* the SIM card contacts are mechanically detached from the SIM interface contacts. This shut-down procedure is particularly required to protect the SIM card as well as the SIM interface of XT55/56 from damage.

An appropriate SIM card detect switch is required on the card holder. For example, this is true for the model supplied by Molex, which has been tested to operate with XT55/56 and is part of the Siemens reference equipment submitted for type approval. Molex ordering number is 91228-0001, see also Chapter 10.

The module's startup procedure involves a SIM card initialization performed within 1 second after getting started. An important issue is whether the initialization procedure ends up with a high or low level of the GSM_CCIN signal:

a) If, during startup of XT55/56, the GSM_CCIN signal on the SIM interface is high, then the status of the SIM card holder can be recognized each time the card is inserted or ejected.
   A low level of GSM_CCIN indicates that no SIM card tray is inserted into the holder. In this case, the module keeps searching, at regular intervals, for the SIM card. Once the SIM card tray with a SIM card is inserted, GSM_CCIN is taken high again.
b) If, during startup of XT55/56, the GSM_CCIN signal is low, the module will also attempt to initialize the SIM card. In this case, the initialization will only be successful when the card is present.
   If the SIM card initialization has been done, but the card is no more operational or removed, then the module will never search again for a SIM card and only emergency calls can be made.

Removing and inserting the SIM card during operation requires the software to be reinitialized. Therefore, after reinserting the SIM card it is necessary to restart XT55/56.
It is strongly recommended to connect the contacts of the SIM card detect switch to the GSM_CCIN input and to the GSM_CCVCC output of the module as illustrated in the sample diagram in Figure 19.

Note: No guarantee can be given, nor any liability accepted, if loss of data is encountered after removing the SIM card during operation.
Also, no guarantee can be given for properly initializing any SIM card that the user inserts after having removed a SIM card during operation. In this case, the application must restart XT55/56.

3.11.2 Design considerations for SIM card holder

The schematic below is a sample configuration that illustrates the Molex SIM card holder located on the DSB45 Support Box (evaluation kit used for type approval of the Siemens XT55/56 reference setup, see [8]). X503 is the designation used for the SIM card holder in [8].

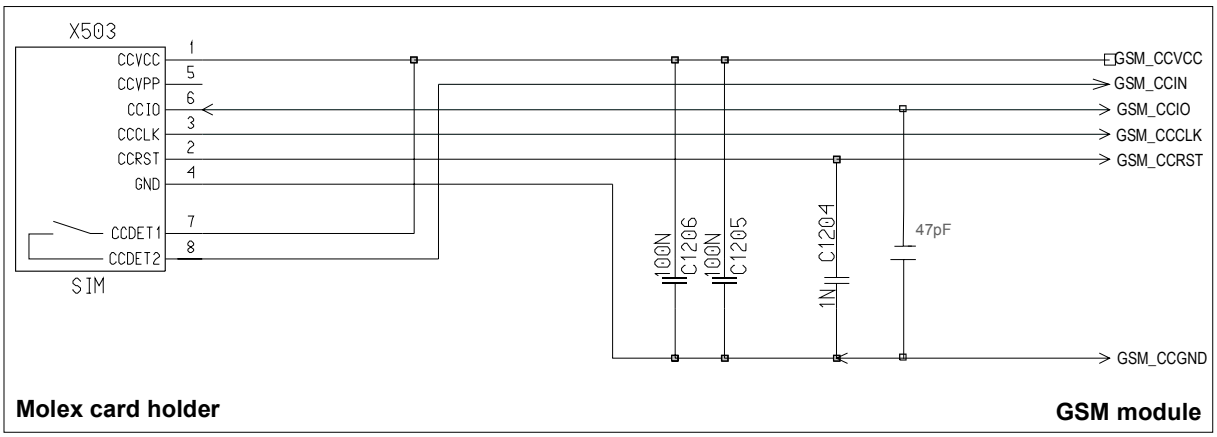

Figure 19: SIM card holder of DSB45 Support Box

Table 16: Pin assignment of Molex SIM card holder on DSB45 Support Box

Pin no.	Signal name	I/O	Function
1	CCVCC	I	Supply voltage for SIM card, generated by the GSM engine
2	CCRST	I	Chip card reset, prompted by the GSM engine
3	CCCLK	I	Chip card clock
4	CCGND	-	Individual ground line for the SIM card to improve EMC
5	CCVPP	-	Not connected
6	CCIO	I/O	Serial data line, bi-directional
7	CCDET1	-	Connect to GSM_CCVCC
8	CCDET2		Connects to the GSM_CCIN input of the GSM engine. Serves to recognize whether a SIM card is in the holder.

Pins 1 through 8 (except for 5) are the minimum requirement according to the GSM Recommendations, where pins 7 and 8 are needed for SIM card tray detection through the GSM_CCIN pin.

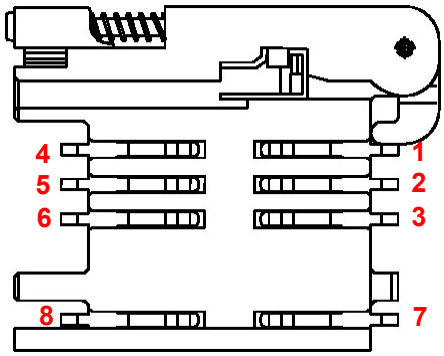

Figure 20: Pin numbers of Molex SIM card holder on DSB45 Support Box

Place the capacitors C1205 and C1206 (or instead one capacitor of 200nF) as close as possible to the pins 1 (CCVCC) and 4 (GND) of the card holder. Connect the capacitors to the pins via low resistance tracks.

3.12 Control signals

3.12.1 Inputs

Table 17: Input control signals of the GSM part of the XT55/56 module

Signal	Pin	Pin status	Function	Remarks
Ignition	GSM_IGT	Falling edge	Power up XT55/56	Active low ≥ 100ms (Open drain/collector driver to GND required in cellular device application). Note: If a charger and a battery is connected to the customer application the GSM_IGT signal must be 1s minimum.
		Left open or HiZ	No operation	
Emergency shutdown	GSM_EMERG-OFF	Low	Power down XT55/56	Active low ≥ 3.2s (Open drain/collector driver required in cellular device application). At the GSM_EMERGOFF signal the watchdog signal of the GSM engine can be traced (see description in Table 27).
		Left open or HiZ	No operation	

(HiZ = high impedance)

3.12.2 Outputs

3.12.2.1 Synchronization signal

The synchronization signal serves to indicate growing power consumption during the transmit burst. The signal is generated by the GSM_SYNC pin. Please note that this pin can adopt two different operating modes which you can select by using the AT^SSYNC command (mode 0 and 1). For details refer to the following chapter and to [1].

To generate the synchronization signal the pin needs to be configured to mode 0 (= default). This setting is recommended if you want your application to use the synchronization signal for better power supply control. Your platform design must be such that the incoming signal accommodates sufficient power supply to the XT55/56 module if required. This can be achieved by lowering the current drawn from other components installed in your application.

The timing of the synchronization signal is shown below. High level of the GSM_SYNC pin indicates increased power consumption during transmission.

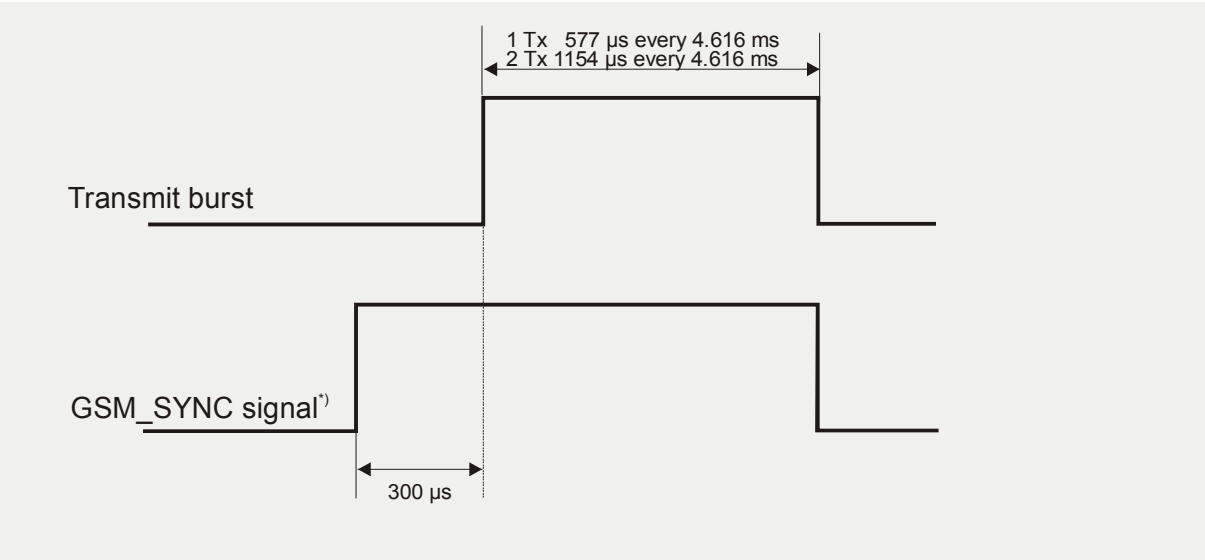

Figure 21: GSM_SYNC signal during transmit burst

*) The duration of the GSM_SYNC signal is always equal, no matter whether the traffic or the access burst are active.

3.12.2.2 Using the GSM_SYNC pin to control a status LED

As an alternative to generating the synchronization signal, the SYNC pin can be used to control a status LED on your application platform.

Especially in the development and test phase of an application, system integrators are advised to use the LED mode of the SYNC pin in order to evaluate their product design and identify the source of errors.

To avail of this feature you need to set the SYNC pin to mode 1 by using the AT^SSYNC command. For details see [1].

When controlled from the SYNC pin the LED can display the functions listed in Table 18. Except for the LED state "off", all LED patterns apply no matter whether XT55/56 works at full functionality level AT+CFUN=1 or has entered a "temporary wake-up state" during one of the CYCLIC SLEEP modes. See Chapter 3.6 for details on the various SLEEP modes.

Table 18: Coding of the status LED

LED mode	Operating status of XT55/56
Permanently off	XT55/56 is in one of the following modes: POWER DOWN mode, ALARM mode, CHARGE-ONLY mode, SLEEP mode with no wake-up event in progress.
600 ms on / 600 ms off	Limited Network Service: No SIM card inserted or no PIN entered, or network search in progress, or ongoing user authentication, or network login in progress.
75 ms on / 3 s off	IDLE mode: The mobile is logged to the network (monitoring control channels and user interactions). No call in progress.
75 ms on / 75 ms off / 75 ms on / 3 s off	One or more GPRS contexts activated.
0.5 s on / off depending on transmission activity	Packet switched data transfer in progress. LED goes on within 1 second after data packets were exchanged. Flash duration is approximately 0.5 s.
Permanently on	Depending on type of call: *Voice call:* Connected to remote party. *CSD call:* Connected to remote party or exchange of parameters while setting up or disconnecting a call.

LED Off = SYNC pin low. LED On = SYNC pin high (if LED is connected as illustrated in Figure 22)

To operate the LED a buffer, e.g. a transistor or gate, must be included in your application. A sample configuration can be gathered from Figure 22. Power consumption in the LED mode is the same as for the synchronization signal mode. For details see Table 27, GSM_SYNC pin.

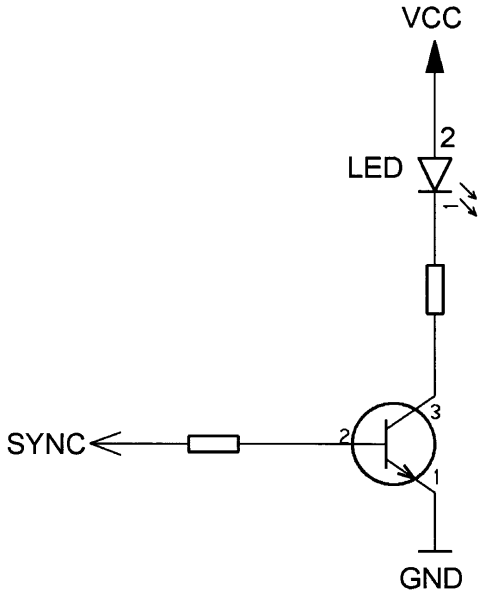

Figure 22: LED Circuit (Example)

3.12.3 Behavior of the GSM_RING0 line (ASC0 interface only)

The GSM_RING0 line is available on the first serial interface (ASC0). The signal serves to indicate incoming calls and other types of URCs (Unsolicited Result Code).

Although not mandatory for use in a host application, it is strongly suggested that you connect the GSM_RING0 line to an interrupt line of your application. In this case, the application can be designed to receive an interrupt when a falling edge on GSM_RING0 occurs. This solution is most effective, particularly, for waking up an application from power saving. Note that if the GSM_RING0 line is not wired, the application would be required to permanently poll the data and status lines of the serial interface at the expense of a higher current consumption. Therefore, utilizing the GSM_RING0 line provides an option to significantly reduce the overall current consumption of your application.

The behavior of the GSM_RING0 line varies with the type of event:

- When a *voice call* comes in the GSM_RING0 line goes low for 1s and high for another 4s. Every 5 seconds the ring string is generated and sent over the GSM_RXD0 line.
  If there is a call in progress and call waiting is activated for a connected handset or handsfree device, the GSM_RING0 line switches to ground in order to generate acoustic signals that indicate the waiting call.

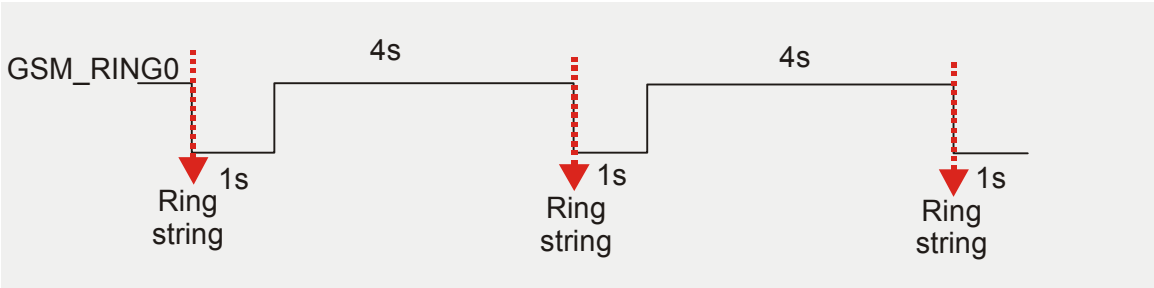

Figure 23: Incoming voice call

- Likewise, when a *Fax* or *data call* is received, GSM_RING0 goes low. However, in contrast to voice calls, the line remains low. Every 5 seconds the ring string is generated and sent over the GSM_RXD0 line.

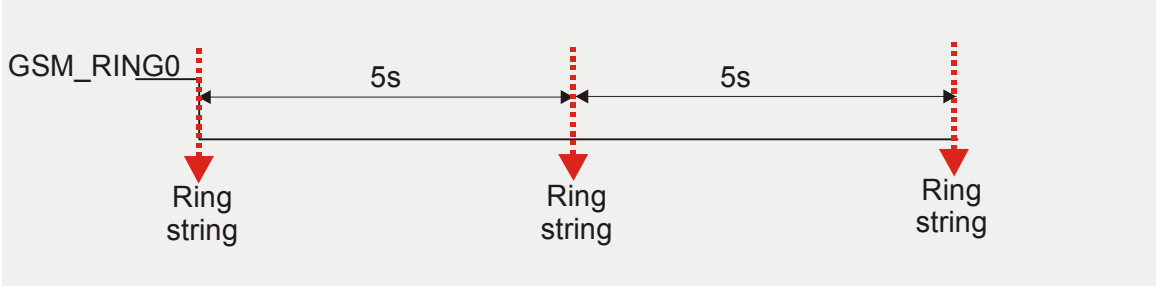

Figure 24: Incoming data call

- All types of Unsolicited Result Codes (URCs) also cause the GSM_RING0 line to go low, however for 1 second only.
  For example, XT55/56 may be configured to output a URC upon the receipt of an SMS. As a result, if this URC type was activated with AT+CNMI=1,1, each incoming SMS causes the GSM_RING0 line to go low. See [1] for detailed information on URCs.

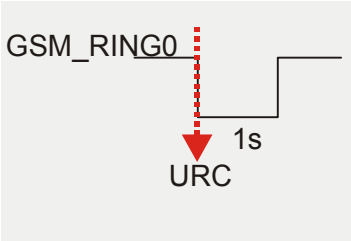

Figure 25: URC transmission

Table 19: ASC0 ring signal

Function	Pin	Status	Description
Ring indication	GSM_RING0	0	Indicates an incoming call or URC. If in NON-CYCLIC SLEEP mode CFUN=0 or CYCLIC SLEEP mode CFUN=5 or 6, the module is caused to wake up to full functionality. If CFUN=7 or 8, power saving is resumed after URC transmission or end of call.
		1	No operation

4 GPS application interface

The XT55/56 module integrates a GPS receiver which offers the full performance of GPS technology. The GPS receiver continuously tracks all satellites in view, thus providing accurate satellite position data.
The GPS block can be used even if the XT55/56 module is deregistered from the GSM network.

4.1 Theory of operation

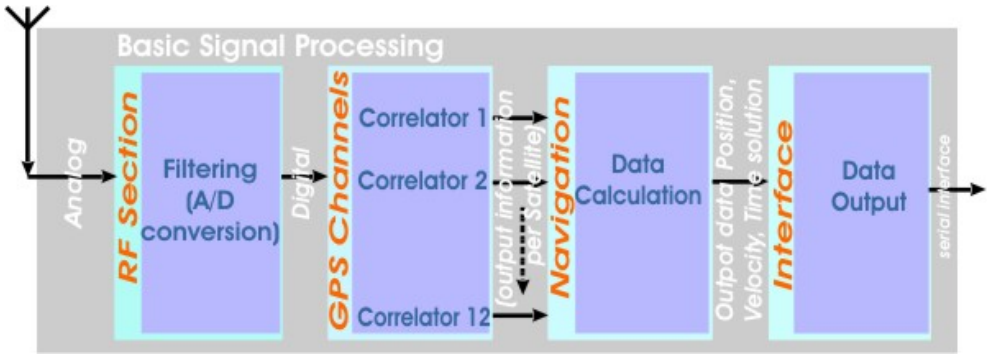

Figure 26: Theory of operation

The XT55/56 GPS part is designed to use L1 Frequency (C/A Code) GPS receiver and performs the entire GPS signal processing, from antenna input to serial position data output. The processing steps involved are:

- RF section
  In the RF section the GPS signal detected by the antenna is amplified, filtered and converted to an intermediate frequency (IF). An A/D converter transforms the analogue intermediate frequency into a digital IF signal.
- GPS channels
  The received digital IF signal bit stream is passed to the baseband section, where it is fed into the correlators. The function of the correlators is to acquire and track the satellite signals. There are 12 channels used in parallel, with each correlator looking for a characteristic PRN code sequence in the bit stream. Once the correlator has found a valid signal, pseudo range, carrier phase and orbit information can be extracted from the GPS signal.
- Navigation
  The on-board processor is running an algorithm that calculates the position, velocity and time. This calculation is called navigation solution. Once the navigation solution is calculated, it can be transformed into the desired coordinate system, e.g. Latitude/ Longitude/ Altitude. For further details refer to [3].
- Interface
  The data of the navigation solution are available at the serial RS-232 interface.

4.2 Technical data

Industry leading GPS performance

- 12 channel GPS receiver
- Signal acquisition using 1920 time / frequency search channels
- Multipath-mitigation hardware
- Cold start < 45 sec

Low power

- Typ. 220mW without active antenna (continuous mode)
- TricklePower™ mode reduces power to < 60mW
- Adaptive TricklePower™ switches between full and TricklePower™
- Push-to-Fix reduces power by as much as 98%

Additional software options (can be obtained separately)

- AVL (for further information refer to [3])
- SiRFXtrac (high sensitivity stand alone software)
- SiRFDrive (high sensitivity dead reckoning software)

Protocols

- SDI1 / SDO1: NMEA 9600 baud, Msg.: GLL, GGA, RMC, VTG, GSV, GSA
  8 data bits, no parity, 1 stop bit
- SDI2 / SDO2: RTCM, 9600 baud

Specification

- Position accuracy
  - Autonomous: < 10m
  - Beacon DGPS: < 2.5m
- Receiver
  - Tracking: L1, CA code
  - Channels: 12
  - Max. update rate: 10 Hz
  - Sensitivity: -138 ± 2 dBm [1)]
  - Max. altitude: <60.000 ft
  - Max. velocity: <1.000 knots
  - Protocol support: NMEA, SiRF binary
- Acquisition rate
  - SnapStart: < 3 sec
  - Hotstart: < 8 sec
  - Warmstart: < 38 sec
  - Coldstart: < 45 sec

[1)] The specified GPS receiver sensitivity of the XT55/56 (GPS software version 2.3) in tracking mode is related to the ARP (antenna reference point). However, the applied antenna, the antenna amplifier, the customer application and / or the applied reference setup might cause variations of the stated receiver sensitivity value.

4.3 GPS operating modes

Mode	Function
Normal operation	The receiver is continuously running in Normal mode, as long as the operating voltage Vcc is supplied. Position fixes are generated at the maximum update rate. This enables the receiver a warm- and hotstart. However, the cold- and warmstart times of the receiver do not differ significantly under good visibility conditions.
Trickle Power mode	Vcc is continuously supplied to the receiver in Trickle Power mode. By using a especially configurable software, the user can force the receiver to acquire a position fix periodically. Between two fixes, the receiver will be in a low power mode. The power-on scenario in Trickle Power mode on the XT55/56 GPS part differs from one in continuous mode. If the receiver fails to acquire satellites within a given period of time (approx. 150 sec), the receiver enters an extended sleep phase. The duration of this sleep phase is approx. 30 sec. After that, the receiver wakes up, starts a reset and tries to acquire satellites. This procedure will be repeated until the GPS receiver can detect satellites. For further details refer to [1].
Push-to-Fix mode	In this mode the receiver will turn on every 30 minutes to perform a system update consisting of a GPS RTC calibration and satellite ephemeris data collection if required (i.e. a new satellite has become visible) as well as all software tasks to support SnapSart in the event of an NMI. Ephemeris collection time in general takes 18 to 30 seconds. If ephemeris data is not required the system will recalibrate and shut down. In either case, the amount of time the receiver remains off will be in proportion to how long it stayed on: $\text{Off period} = \frac{\text{On Period}*(1-\text{Duty Cycle})}{\text{Duty Cycle}}$ The off period has a possible range between 10 and 7200 seconds. The default is 1800 seconds.

4.3.1 Trickle Power mode

The default mode of XT55/56 GPS part is continuous mode, but the user can set the XT55/56 GPS part into the Trickle Power mode using the input command message. The XT55/56 GPS part enters the Trickle Power mode corresponding to Figure 27 (800ms OFF time and 200ms ON time) as soon as valid GPS data are available. As a result the average power consumption is reduced by approximately 80 % (approximately 150mW). The settings for the Trickle Power mode can be modified by using the SiRFstar demo software. For example if the XT55/56 GPS part is configured to enter the OnTime mode each 10s for a duration of 200ms the average power consumption can be reduced up to approx. 95% (approx. 15mW, ca. 4.8mA at Vcc=3.3V). For more details refer to [1].

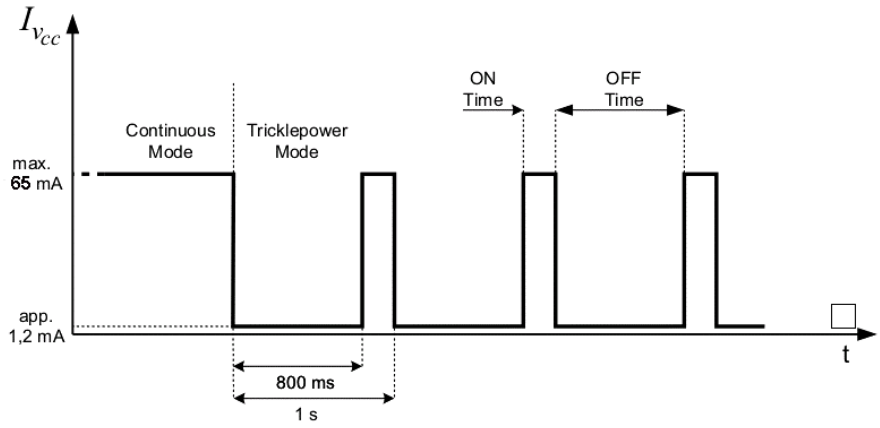

Figure 27: Example for current in Trickle Power mode

4.3.2 Comparison of Trickle Power and Push-to-Fix mode

A comparison of the Trickle Power mode and Push-to-Fix mode is shown in Figure 28. This diagram shows that for position update intervals less than approximately 600 seconds (i.e. rates faster than one fix per 10 minutes), the Trickle Power mode at an update interval of 10 seconds offers a lower power solution. The user would then be required to filter the output position data to use only the data points corresponding to the desired update interval. For example, if the desired position output is at 60 second intervals, then the user would only need one out of every six position outputs at a 10 second Trickle Power update interval. Alternatively, the user could perform smoothing or averaging of the position data and provide an output at the desired rate.
Please note that neither Trickle Power mode nor Push-to-Fix mode are supported if running XT55/56 AVL software. For further details regarding power supply ratings see [3].

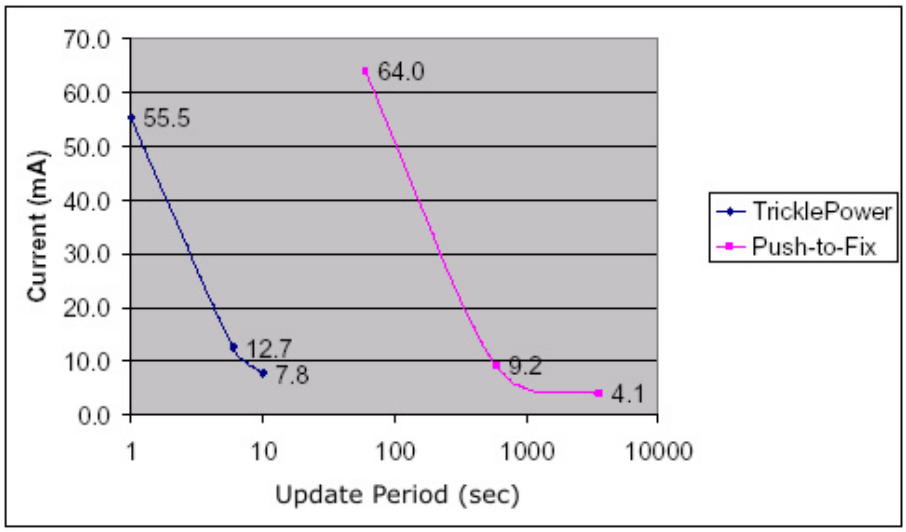

Figure 28: Comparing typical current in Trickle Power and Push-to-Fix mode

4.4 Power supply of the XT55/56 GPS part

The power supply for the GPS part of the XT55/56 module has to be a single voltage source of V_{CC}=3.3V ± 5%. It must be able to provide sufficient current of >100mA.

GPS_VCC:
Two GPS_VCC pins of the board-to-board connector are dedicated to connect the power supply voltage, five GND pins shared with the GSM part of the XT55/56 module are recommended for grounding; see Figure 40 for details.
If no GPS_VCC is connected to XT55/56, the RTC and SRAM of the GPS part of XT55/56 can be fed by GSM_BATT+ of XT55/56.

GPS_VANT:
This pin is used for an external DC power supply of an active antenna.
The GPS_VANT input voltage should be chosen according to the connected antenna.
In order to use a 5V active GPS antenna, the GPS_VANT has to be connected to 5V external power supply.
When using a 3V antenna it is possible to connect the GPS_VCC_RF output (which provides 3.0V) to GPS_VANT.

GPS_VCC_RF:
This pin is an output which provides +3.0V DC and can be connected to the GPS_VANT in order to supply the GPS antenna.
In Trickle Power mode and Push-to-Fix mode, GPS_VCC_RF is switched off during the sleep phase.

GSM_BATT+:
If no GPS_VCC is connected to XT55/56, the RTC and SRAM of the GPS part of XT55/56 is fed by GSM_BATT+ of XT55/56.

4.5 General purpose input/output

Several I/O's (GPS_GPIO0, GPS_GPIO1, GPS_GPIO3, GPS_GPIO5, GPS_GPIO6, GPS_GPIO7, GPS_GPIO10, GPS_GPIO13, GPS_GPIO14, GPS_GPIO15) of the CPU are connected to the hardware interface connector of the XT55/56 GPS receiver. They are reserved for customer specific applications.

NOTE: Not all of these pins are supported by the current GPS firmware.

4.6 Serial interfaces of the XT55/56 GPS part

The GPS part of the XT55/56 module offers two serial interfaces:

SD1
- 2-wire serial interface
- Includes the SDI1 (receive) and SDO1 (transmit) lines
- Supported baud rate: 9600…115200 bps. See also [1] for details on the used GPS protocol.

SD2
- 2-wire serial interface
- Includes the SDI2 (receive) and SDO2 (transmit) lines. It is intended for communication with the GSM/ GPRS part of the XT55/56 module. See Figure 1 for details.
- Supported baud rate: 9600…115200 bps. See also [1] for details on the used GPS protocol.

SD1 and SD2
- Both interfaces are configured for 8 data bits, no parity and 1 stop bit
- For more detailed characteristics see [1]

4.7 GPS control signals

GPS_M-RST:

This pin provides an active-low reset input to the board. It causes the board to reset and start searching for satellites. Reset is an optional input and, if not utilized, it may be left open.

GPS_BOOTSEL:

Set this pin to high for reprogramming the flash of the XT55/56 GPS part (for instance updating to a new XT55/56 GPS firmware).

GPS_RFPC0, GPS_RFPC1 (including pull-up resistors):

These pins are input pins for Trickle-Power mode control. To use the Trickle-Power mode function connect the RFPC0 and RFPC1 as shown in Figure 58. The pull-up resistors ensure the correct voltage level during start-up and reset procedure of the GPS base band processor.

GPS_GPIO8, GPS_GPIO4:

These pins are control outputs for the Trickle-Power mode. GPS_GPIO8 must be connected to GPS_RFPC0 and GPS_GPIO4 to GPS_RFPC1.

GPS_GPIO8, GPS_GPIO4 can also be used to control a LED. A possible circuit is shown in Figure 29. If the LED lights permanently the GPS receiver is searching for satellites. If the GPS receiver is in Trickle-Power mode, the LED flashes in rhythm, i.e. the GPS receiver receives valid position data. Timing differs between GPS_GPIO4 and GPS_GPIO8.

Note: If Trickle power is switched off the LED lights permanently.

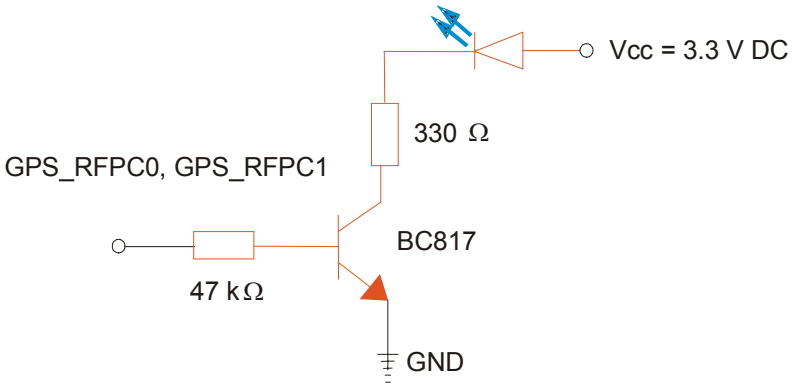

Figure 29: Example of LED circuit

4.8 Receiver architecture

The XT55/56 GPS receiver is a product that features the SiRFstarII-Low Power chipset. It is a complete 12 channel, WAAS-enabled GPS receiver which provides a vastly superior position accuracy performance. The SiRFstarII architecture builds on the high-performance SiRFstarI core, adding an acquisition accelerator, differential GPS processor, multipath mitigation hardware and satellite-tracking engine. The XT55/56 GPS receiver delivers major advancements in GPS performance, accuracy, integration, computing power and flexibility.

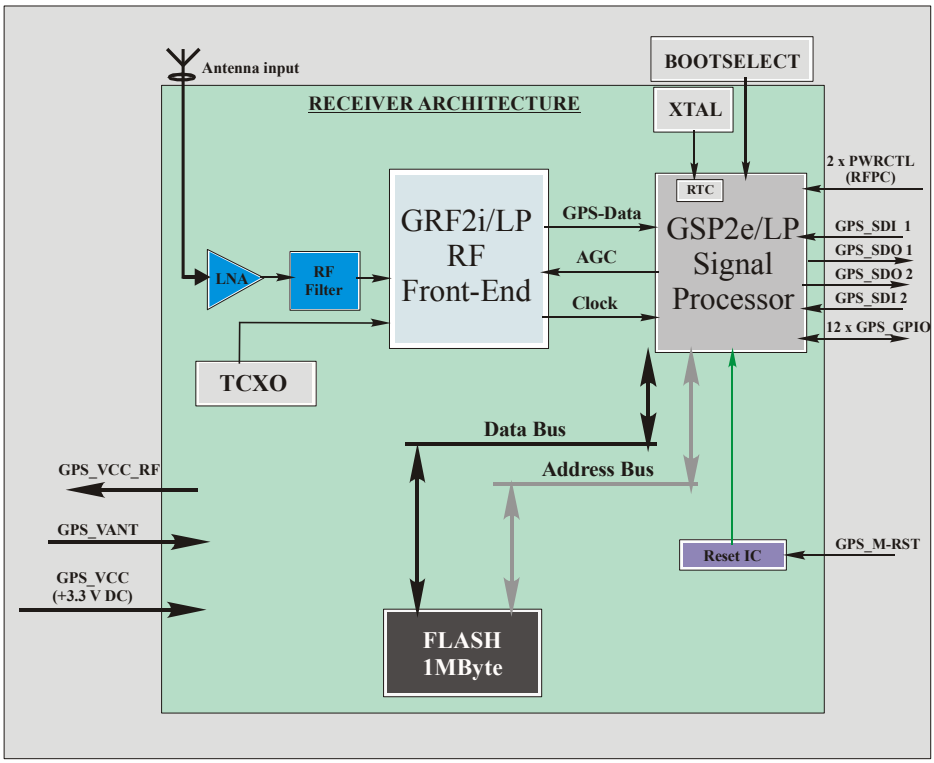

Figure 30: Receiver architecture of the GPS receiver

Figure 30 above shows the block diagram of the XT55/56 GPS receiver architecture. The GPS module can be separated into four major parts: RF frequency down-converter, digital baseband demodulation, embedded ARM microprocessor and internal GPS software stored on-board (1 MByte) Flash-Memory. The RF frequency conversion and the baseband demodulation are executed by hardware while the embedded ARM processor computes the GPS position, velocity and time solution employing the internal GPS software.
The purpose of the RF circuitry is to reinforce the very weak (-130dBm nominal) GPS signal, to filter it and to down-convert it to an Intermediate Frequency (IF) of 9.45MHz for digital processing. The SiRFstarII architecture relies on the high level of integration in the GRF2i to significantly reduce part count and circuit complexity. A IF filter is built-in as well.

- The digital baseband demodulator takes the quantified GPS signal and detects the individual satellites serial data bit stream, along with the associated pseudo range. This action consists of removing spread spectrum and Doppler frequency components of the signal to obtain the serial data messages.
- The embedded ARM processor monitors channel allocation, extracts the raw satellite tracking data, computes the position and time solution and sends it on a serial port for high level applications to use or processes it locally. Support functions for the microprocessor include real time clock and reset pulse generator circuits. The internal GPS software monitors and allocates channels, computers the position, velocity and time using the pseudo-range of the satellites and reformats the data to be output or used locally. The internal GPS software is a tasking based architecture driven by the 100ms interrupt generated by GPS2e internal hardware.

4.9 Operation procedure

When the receiver is powered up, it steps trough a sequence of states until it can initially determine position, velocity and time. Afterwards, the satellite signals are tracked continuously and the position is calculated periodically.
In order to perform a navigation solution (3D solution), the receiver needs.

- Pseudo-ranges for at least 3 satellites
- Ephemeris data for the satellites it will use in the navigation solution.

Note: If almanac navigation is enabled, the receiver can calculate a position without downloading ephemeris data (with a significant position error compared to an ephemeris based solution).

The initial position calculation is made, using a Least-Squares Algorithm. Successive position calculations are performed with a Kalman Filter. To generate a position (3D solution) calculation the receiver needs at least 4 measurements to different satellites. In order to calculate a position (Latitude/Longitude/Height), as a 2D solution with an estimated height value, then 3 different satellites are required. Pseudo-range and carrier phase information are available to the position determination algorithms if the receiver has found a SV (acquisition) and can track the signal thereafter. Ephemeris data for a SV can be decoded from orbit data once the GPS signal has been acquired. Each SV transmits its own ephemeris data, the broadcast lasts for 18 seconds, repeating every 30 seconds.
The receiver stores ephemeris data in battery-backed memory. This data can be used in future startup's to improve the time to first fix (TTFF). The ephemeris can also be supplied to the receiver via the serial port.

4.10 Start-up procedures

The start-up strategy of the XT55/56 GPS part depends on the last position, current time and ephemeris data, that the receiver has stored the external SRAM memory. There are three different start-up procedures:

4.10.1 Coldstart

The coldstart takes place when the receiver has no knowledge of its last position or time. In this case the GPS RTC has not been running and no valid ephemeris data or almanac data is available (The receiver has never been navigating or no battery backup memory available).

4.10.2 Warmstart

This start-up procedure is performed whenever the receiver is able to use the valid almanac data, and has not in an important manner moved since the last valid position calculation. This procedure starts if the receiver has been shut off for more than 2 hours, but the last position, time and almanac are still acknowledged. This procedure is able to announce the current visible satellites in advance. However, since ephemeris data are not available or cannot longer be used, the receiver has to wait for the ephemeris broadcast to complete.

4.10.3 Hotstart

Hotstart is performed whenever the receiver still has access to valid ephemeris data and exact time. This procedure starts if the receiver has been shut off for less than 2 hours and the GPS RTC has been running during that time. Furthermore, during the previous session, the receiver must have been navigating (to allow it to decode and store ephemeris data).
In Hotstart, the receiver can announce in advance the currently visible satellites, and is therefore able to quickly obtain and track the signal. Due to the fact that ephemeris is already known, there is no need to wait for the ephemeris broadcast to complete.

5 GSM and GPS antenna interfaces

5.1 GSM antenna installation

The RF interface has an impedance of 50Ω. XT55/56 is capable of sustaining a total mismatch at the antenna connector or pad without any damage, even when transmitting at maximum RF power.

The external antenna must be matched properly to achieve best performance regarding radiated power, DC-power consumption and harmonic suppression. Matching networks are not included on the XT55/56 PCB and should be placed in the host application.

Regarding the return loss XT55/56 provides the following values:

Table 20: Return loss

State of module	Return loss of module	Recommended return loss of application
Receive	≥ 8dB	≥ 12dB
Transmit	not applicable	≥ 12dB
Idle	≤ 5dB	not applicable

The connection of the antenna or other equipment must be decoupled from DC voltage.

5.1.1 GSM antenna connector

To suit the physical design of individual applications XT55/56 offers two alternative approaches to connecting the GSM antenna:

- Recommended approach: U.FL-R-SMT antenna connector from Hirose assembled on the component side of the PCB (top view on XT55/56). See Chapter 5.3 for details.
- Antenna pad and grounding plane placed on the bottom side. See Chapter 5.1.2.

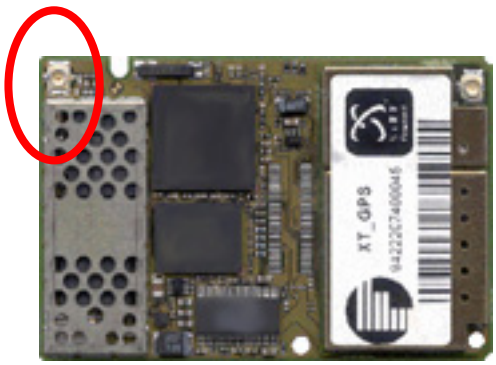

Figure 31: U.FL-R-SMT connector

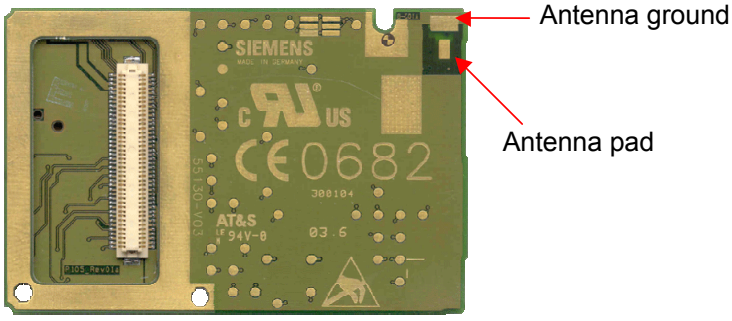

Figure 32: Antenna pad and GND plane

The U.FL-R-SMT connector has been chosen as antenna reference point (ARP) for the Siemens reference equipment submitted to type approve XT55/56. All RF data specified throughout this manual are related to the ARP. For compliance with the test results of the Siemens type approval you are advised to give priority to the connector, rather than using the antenna pad.

IMPORTANT: Both solutions can only be applied alternatively. This means, whenever an antenna is plugged to the Hirose connector, the pad must not be used. Vice versa, if the antenna is connected to the pad, then the Hirose connector must be left empty.

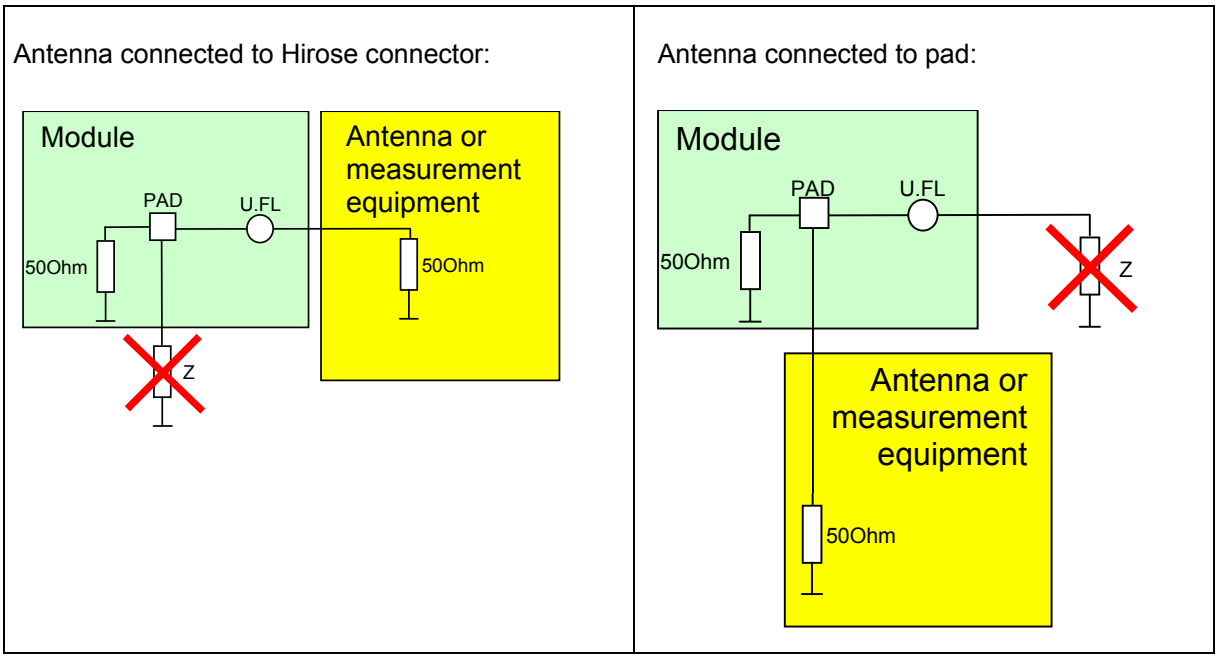

Figure 33: Never use antenna connector and antenna pad at the same time

No matter which option you choose, ensure that the antenna pad does not come into contact with the holding device or any other components of the host application. It needs to be surrounded by a restricted area filled with air, which must also be reserved 0.8 mm in height.

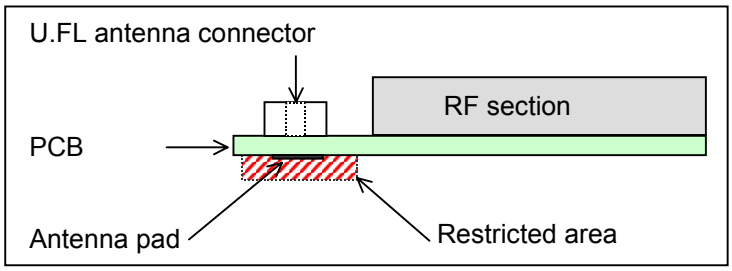

Figure 34: Restricted area around antenna pad

5.1.2 GSM antenna pad

The antenna can be soldered to the pad, or attached via contact springs. To help you ground the antenna, XT55/56 comes with a grounding plane located close to the antenna pad. The positions of both pads can be seen from Figure 50.

When you decide to use the antenna pad take into account that the pad has not been intended as antenna reference point (ARP) for the Siemens XT55/56 type approval. The antenna pad is provided only as an alternative option which can be used, for example, if the recommended Hirose connection does not fit into your antenna design.

Also, consider that according to the GSM recommendations TS 45.005 and TS 51.010-01 a 50Ω connector is mandatory for type approval measurements. This requires GSM devices with an integral antenna to be temporarily equipped with a suitable connector or a low loss RF cable with adapter.

To prevent damage to the module and to obtain long-term solder joint properties you are advised to maintain the standards of good engineering practice for soldering.

XT55/56 material properties:
XT55/56 PCB: FR4
Antenna pad: Gold plated pad

Suitable cable types:
For direct solder attachment, we suggest to use the following cable types:
- RG316/U 50 Ohm coaxial cable
- 1671A 50 Ohm coaxial cable

Suitable cables are offered, for example, by IMS Connector Systems. For further details and other cable types please contact http://www.imscs.com.

5.2 Installing the GPS antenna

In order to receive satellite signals an additional GPS antenna must be connected to the GPS part of the XT55/56 module. The position of the GPS antenna connector can be found in Figure 35 and Figure 51. Recommended devices which can be mounted onto the Hirose connector are available in Chapter 10.

Figure 35: GPS antenna connector (U.FL-R-SMT connector)

5.3 Hirose antenna connector

XT55/56 uses two ultra-miniature SMT antenna connectors (GSM and GPS antenna) supplied from Hirose Ltd. The product name is **U.FL-R-SMT**.

The positions of both antenna connectors on the XT55/56 board can be seen in Figure 49.

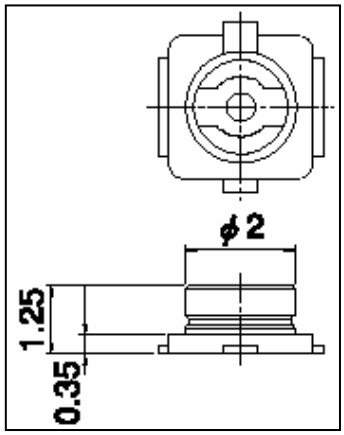

Figure 36: Mechanical dimensions of U.FL-R-SMT connector

Table 21: Product specifications of U.FL-R-SMT connector

Item	Specification	Conditions
Ratings		
Nominal impedance	50 Ω	Operating temp: -40°C to +90°C Operating humidity: max. 90%
Rated frequency	DC to 6 GHz	
Mechanical characteristics		
Female contact holding force	0.15 N min	Measured with a ∅ 0.475 pin gauge
Repetitive operation	Contact resistance: Centre 25 mΩ Outside 15mΩ	30 cycles of insertion and disengagement
Vibration	No momentary disconnections of 1 µs; No damage, cracks and looseness of parts	Frequency of 10 to 100 Hz, single amplitude of 1.5 mm, acceleration of 59 m/s^2, for 5 cycles in the direction of each of the 3 axes
Shock	No momentary disconnections of 1 µs. No damage, cracks and looseness of parts.	Acceleration of 735 m/s^2, 11 ms duration for 6 cycles in the direction of each of the 3 axes
Environmental characteristics		
Humidity resistance	No damage, cracks and looseness of parts. Insulation resistance: 100 MΩ min. at high humidity 500 MΩ min when dry	Exposure to 40°C, humidity of 95% for a total of 96 hours
Temperature cycle	No damage, cracks and looseness of parts. Contact resistance: Centre 25 mΩ Outside 15mΩ	Temperature: +40°C → 5 to 35°C → +90°C → 5 to 35°C Time: 30 min. → within 5 min. → 30 min. → within 5 min
Salt spray test	No excessive corrosion	48 hours continuous exposure to 5% salt water

Table 22: Material and finish of U.FL-R-SMT connector and recommended plugs

Part	Material	Finish
Shell	Phosphor bronze	Silver plating
Male centre contact	Brass	Gold plating
Female centre contact	Phosphor bronze	Gold plating
Insulator	Plug: PBT Receptacle: LCP	Black Beige

Mating plugs and cables can be chosen from the Hirose U.FL Series. Examples are shown below and listed in Table 23. For latest product information please contact your Hirose dealer or visit the Hirose home page, for example http://www.hirose.com.

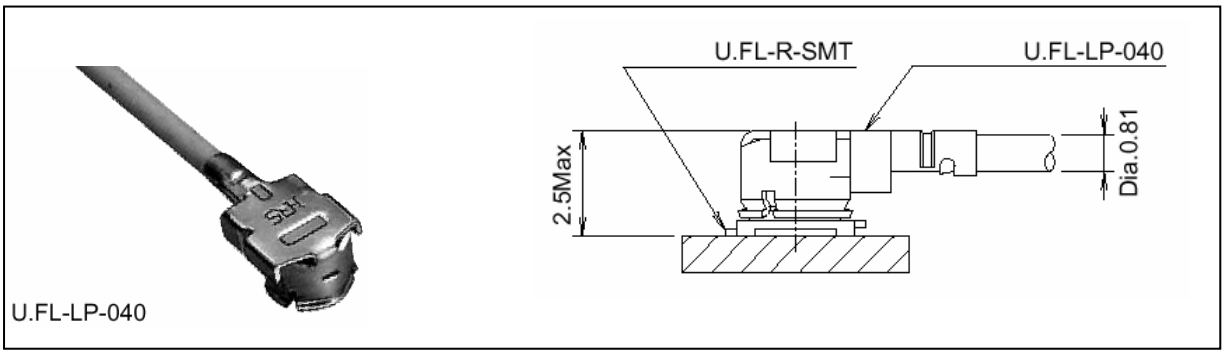

Figure 37: U.FL-R-SMT connector with U.FL-LP-040 plug

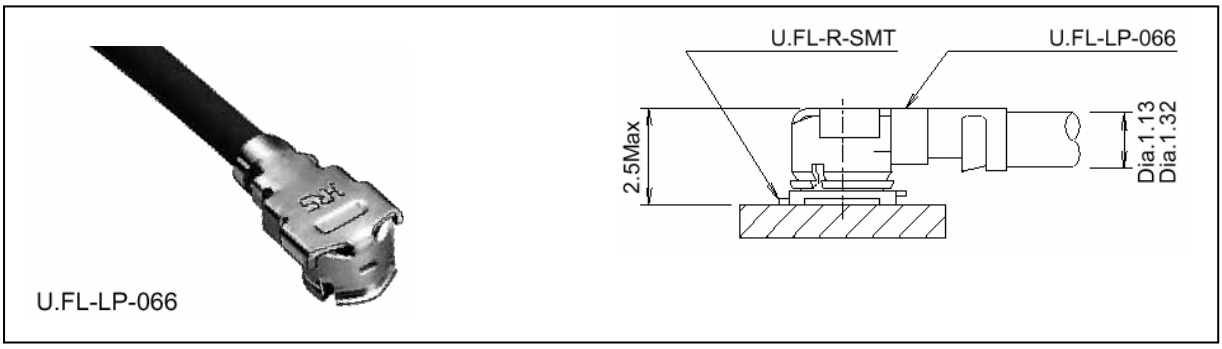

Figure 38: U.FL-R-SMT connector with U.FL-LP-066 plug

In addition to the connectors illustrated above, the U.FL-LP-(V)-040(01) version is offered as an extremely space saving solution. This plug is intended for use with extra fine cable (up to ∅ 0.81 mm) and minimizes the mating height to 2 mm. See Figure 39 which shows the Hirose datasheet.

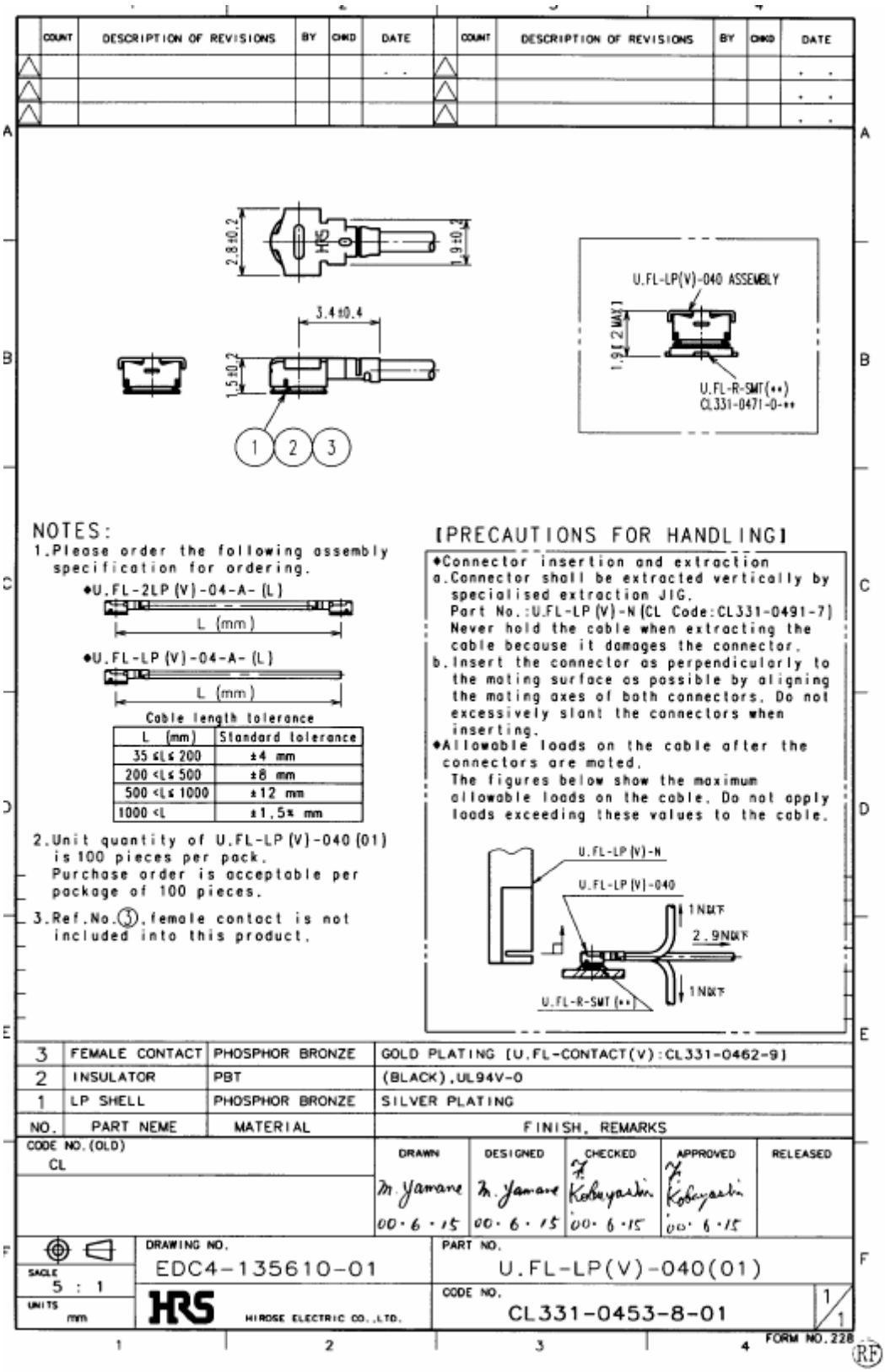

Figure 39: Specifications of U.FL-LP-(V)-040(01) plug

Table 23: Ordering information for Hirose U.FL Series

Item	Part number	HRS number
Connector on XT55/56	U.FL-R-SMT	CL331-0471-0-10
Right-angle plug shell for ∅ 0.81 mm cable	U.FL-LP-040	CL331-0451-2
Right-angle plug for ∅ 0.81 mm cable	U.FL-LP(V)-040 (01)	CL331-053-8-01
Right-angle plug for ∅ 1.13 mm cable	U.FL-LP-068	CL331-0452-5
Right-angle plug for ∅ 1.32 mm cable	U.FL-LP-066	CL331-0452-5
Extraction jig	E.FL-LP-N	CL331-0441-9

6 Electrical, reliability and radio characteristics

6.1 Absolute maximum ratings

Absolute maximum ratings for supply voltage and voltages on digital and analog pins of XT55/56 are listed in Table 24. Exceeding these values will cause permanent damage to XT55/56.

Table 24: Absolute maximum ratings (GSM part)

Parameter	Min	Max	Unit
Voltage GSM_BATT+	-0.3	4.8	V
Voltage at digital pins	-0.3	3.3	V
Voltage at analog pins	-0.3	3.0	V
Voltage at digital / analog pins in POWER DOWN mode	-0.25	+0.25	V
Voltage at GSM_POWER pin		15	V
Voltage at GSM_CHARGE pin		15	V
Differential load resistance between EPNx and EPPx	15		Ω

Table 25: Absolute maximum rating (GPS part)

Parameter	Min	Max	Unit
Voltage at GPS_VCC	-0.3	3.46	V
Current at GPS_VCC_RF		25	mA

6.2 Operating temperatures

Test conditions were specified in accordance with IEC 60068-2 (still air). The values stated below are in compliance with GSM recommendation TS 51.010-01.

Table 26: Operating temperatures

Parameter	Min	Typ	Max	Unit
Ambient temperature (according to GSM 11.10)	-20	25	55	°C
Restricted operation *)	-25 to -20		55 to 70***	°C
Automatic shutdown XT55/56 board temperature Battery temperature	 -29 -18		 ≥70** ≥60	 °C °C
Charging temperature (software controlled fast charging)	0		+45	°C

*) XT55/56 works, but deviations from the GSM specification may occur.

**) XT55/56 has the automatic shutdown set to 70°C at PCL 5 (GSM 900) GPRS class 8. This prevents permanent damage to components on the board. Consider the ratio of output power,

supply voltage and operating temperature: To achieve $T_{amb\ max}$ = 70°C and, for example, GSM 900 PCL 5 the supply voltage must not be higher than 4.2V.

***) To achive $T_{amb\ max}$ = 70°C at permanent GPRS class 8 operation (1 TX, 4 RX GSM 900 at PCL 5 with a supply voltage 4.2V) it is recommended to integrate XT55/56 in such a way that a minor heat exchange with the environment can take place. A solution might be the usage of a small heat sink.

6.3 Pin description

Please note that the reference voltages listed in Table 27 are the values measured directly on the XT55/56 module. They do not apply to the accessories connected.
If an input pin is specified for V_{IH}max = 3.3V, be sure never to exceed the stated voltage. The value 3.3V is an absolute maximum rating.
The Hirose DF12C board-to-board connector on XT55/56 is a 80-pin double-row receptacle. The names and the positions of the pins can be seen from Figure 40 which shows the top view of XT55/56.

GPS_VANT	1	80	GSM_EPN2
GPS_VCC_RF	2	79	GSM_EPP2
GPS_VCC	3	78	GSM_EPP1
GPS_VCC	4	77	GSM_EPN1
GSM_RXDDAI	5	76	GSM_MICN2
GSM_TFSDAI	6	75	GSM_MICP2
GSM_SCLK	7	74	GSM_MICP1
GSM_TXDDAI	8	73	GSM_MICN1
GSM_RFSDAI	9	72	GSM_CCVCC
NC	10	71	GSM_CCCLK
NC	11	70	GSM_CCIO
NC	12	69	GSM_CCRST
NC	13	68	GSM_CCIN
NC	14	67	GSM_CCGND
GSM_RTS1	15	66	GSM_IGT
GSM_CTS1	16	65	GSM_EMERGOFF
GSM_RXD1	17	64	GSM_DCD0
GSM_TXD1	18	63	GSM_CTS0
NC	19	62	GSM_DTR0
GPS_GPIO15	20	61	GSM_RTS0
GPS_GPIO14	21	60	GSM_RING0
GPS_GPIO13	22	59	GSM_DSR0
GPS_GPIO10	23	58	GSM_TXDO
GPS_GPIO9	24	57	GSM_RXDO
GPS_GPIO8	25	56	GPS_SDI2
GPS_GPIO7	26	55	GPS_SDO2
GPS_GPIO6	27	54	GSM_CHARGE
GPS_GPIO5	28	53	GSM_POWER
GPS_GPIO4	29	52	GSM_BATT_TEMP
GPS_GPIO3	30	51	GSM_SYNC
GPS_GPIO1	31	50	GSM_BATT+
GPS_GPIO0	32	49	GSM_BATT+
GPS_SDI1	33	48	GSM_BATT+
GPS_SDO1	34	47	GSM_BATT+
GPS_BOOTSEL	35	46	GSM_BATT+
GPS_RFPCO	36	45	GND
GPS_RFPC1	37	44	GND
GPS_M-RST	38	43	GND
GSM_VDD	39	42	GND
GSM_VDDLP	40	41	GND

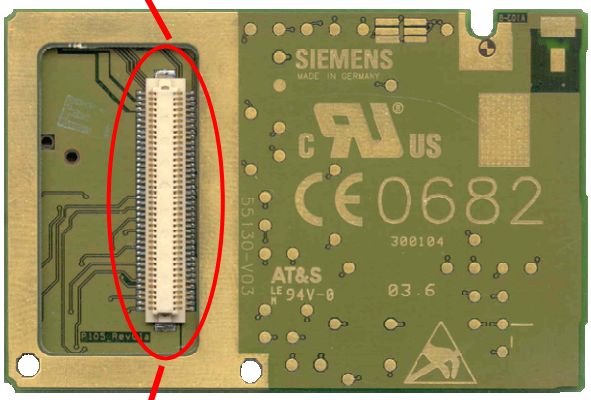

Figure 40: Pin assignment (top view on XT55/56)

Table 27: Electrical description of application interface

Function	Signal name	IO	Signal form and level	Comments
GSM power supply	GSM_BATT+	I	V_I = 3.3V to 4.8V $V_I$norm = 4.2V Inorm ≈ 1.6A (during Tx burst) Imax< 2A 1 Tx, peak current 577µs every 4.616ms 2 Tx, peak current 1154µs every 4.616ms	Power supply input. 5 GSM_BATT+ pins to be connected in parallel. 5 GND pins to be connected in parallel. The power supply must be able to meet the requirements of current consumption in a Tx burst (up to 3A). Sending with two timeslots doubles the duration of current pulses to 1154µs (every 4.616ms)!
	GND			
Charge interface	GSM_POWER	I	$V_I$min = 3.0V $V_I$max = 15V	This line signalizes to the processor that the charger is connected. If unused keep pin open.
	GSM_BATT_TEMP	I	Connect NTC with R_{NTC} ≈ 10kΩ @ 25°C to ground.	Input to measure the battery temperature over NTC resistor. NTC should be installed inside or near battery pack to enable the charging algorithm and deliver temperature values. If unused keep pin open.
	GSM_CHARGE	O	I_{GSM_CHARGE} = -300µA ... -600µA @ 3V < V_{GSM_CHARGE} < V_{LOAD}	This line is a current source for the charge FET with a 10kΩ resistance between gate and source. If unused keep pin open.
External supply voltage	GSM_VDD	O	GSM_VDDmin = 2.84V, GSM_VDDmax = 2.96V Imax = -10mA $C_L$max = 1µF	Supply voltage, e.g. for an external LED or level shifter. The external digital logic must not cause any spikes or glitches on voltage GSM_VDD. Not available in POWER DOWN mode. GSM_VDD signalizes the "ON" state of the module. If unused GSM_VDD keep pin open.
VDD Low Power	GSM_VDDLP	I/O	R_I =1kΩ $V_O$max ≈ 4.0V (output) $V_I$min = 2.2V, $V_I$max = 5.5V (input) $I_I$typ = 10µA at GSM_BATT+ = 0V Mobile in POWER DOWN mode: $V_I$min = 1.2V	Supplies the RTC with power via an external capacitor or buffer battery if no V_{GSM_BATT+} is applied. If unused keep pin open.

Function	Signal name	IO	Signal form and level	Comments
Ignition	GSM_IGT	I	$R_I \approx 100k\Omega$, $C_I \approx 1nF$ V_{IL}max = 0.5V at Imax = -20µA V_{Open}max = 2.3V ON ~~~|____|~~~ Active Low ≥ 100ms	Input to switch the mobile ON. The line must be driven low by an Open Drain or Open Collector driver.
Emergency shutdown (Watchdog)	GSM_EMERGOFF	I/O	$R_I \approx 22k\Omega$ V_{IL}max = 0.5V at Imax = -100µA V_{Open}max = 2.73V Signal ~~~|_____|~~~ Active Low ≥ 3.2s Watchdog: V_{OL}max = 0.35V at I = 10µA V_{OH}min= 2.25V at I = -10µA $f_O$min = 0.16Hz $f_O$max = 1.55Hz	This line must be driven by an Open Drain or Open Collector driver. Emergency shutdown deactivates the power supply to the module. The module can be reset if GSM_IGT is activated after emergency shutdown. To switch the mobile off use the AT^SMSO command. To avoid floating if pin is high impedance, use pull-down resistor tied to GND. See Chapter 3.3.2.1. GSM_EMERGOFF also indicates the internal watchdog function. If unused keep pin open.
Synchroni-zation	GSM_SYNC	O	V_{OL}max = 0.2V at I = 1mA V_{OH}min = 2.35V at I = -1mA V_{OH}max = 2.73V 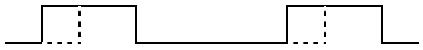 1 Tx, 877µs impulse each 4.616ms and 2 Tx, 1454µs impulse each 4.616ms, with 300µs forward time.	Indicates increased current consumption during uplink transmission burst. Note that timing is different during handover. Alternatively used to control status LED (see Chapter 3.12.2.2). If unused keep pin open.

Function	Signal name	IO	Signal form and level	Comments
SIM interface	GSM_CCIN	I	$R_I \approx 100k\Omega$ V_{IL}max = 0.5V V_{IH}min = 2.15V at I = 20µA, V_{IH}max=3.3V at I = 30µA	GSM_CCIN = high, SIM card holder closed (no card recognition) Maximum cable length 200mm to SIM card holder. All signals of SIM interface are protected against ESD with a special diode array. Usage of GSM_CCGND is mandatory.
	GSM_CCRST	O	$R_O \approx 47\Omega$ V_{OL}max = 0.25V at I = 1mA V_{OH}min = 2.3V at I = -1mA V_{OH}max = 2.73V	
	GSM_CCIO	IO	$R_I \approx 10k\Omega$ V_{IL}max = 0.5V V_{IH}min = 1.95V, V_{IH}max=3.3V $R_O \approx 220\Omega$ V_{OL}max = 0.4V at I = 1mA V_{OH}min = 2.15V at I = -1mA V_{OH}min = 2.55V at I = -20µA V_{OH}max = 2.96V	
	GSM_CCCLK	O	$R_O \approx 220\Omega$ V_{OL}max = 0.4V at I = 1mA V_{OH}min = 2.15V at I = -1mA V_{OH}max = 2.73V	
	GSM_CCVCC	O	$R_O$max = 5Ω GSM_CCVCCmin = 2.84V, GSM_CCVCCmax = 2.96V Imax = -20mA	
	GSM_CCGND		Ground	
ASC0 interface	GSM_RXD0	O	V_{OL}max = 0.2V at I = 1mA V_{OH}min = 2.35V at I = -1mA V_{OH}max = 2.73V V_{IL}max = 0.5V V_{IH}min = 1.95V, V_{IH}max=3.3V GSM_DTR0, GSM_RTS0: Imax = -90µA at V_{IN} = 0V GSM_TXD0: Imax = -30µA at V_{IN} = 0V	First serial interface for AT commands or data stream. To avoid floating if output pins are high-impedance, use pull-up resistors tied to GSM_VDD or pull-down resistors tied to GND. See Chapter 3.3.2.1. If unused keep pins open.
	GSM_TXD0	I		
	GSM_CTS0	O		
	GSM_RTS0	I		
	GSM_DTR0	I		
	GSM_DCD0	O		
	GSM_DSR0	O		
	GSM_RING0	O		
ASC1 interface	GSM_RXD1	O	V_{OL}max = 0.2V at I = 1mA V_{OH}min = 2.35V at I = -1mA V_{OH}max = 2.73V V_{IL}max = 0.5V V_{IH}min = 1.95V, V_{IH}max=3.3V $I_I$max = -90µA at V_{IN} = 0V	Second serial interface for AT commands. To avoid floating if output pins are high-impedance, use pull-up resistors tied to GSM_VDD or pull-down resistors tied to GND. See Chapter 3.3.2.1. If unused keep pins open.
	GSM_TXD1	I		
	GSM_CTS1	O		
	GSM_RTS1	I		
Digital audio interface	GSM_RFSDAI	I	V_{OL}max = 0.2V at I = 1mA V_{OH}min = 2.35V at I = -1mA V_{OH}max = 2.73V V_{IL}max = 0.5V V_{IH}min = 1.95V, V_{IH}max=3.3V $I_I$max = 330µA at V_{IN} = 3.3V	If unused keep pins open.
	GSM_RXDDAI	I		
	GSM_SCLK	I		
	GSM_TFSDAI	O		
	GSM_TXDDAI	O		

Function	Signal name	IO	Signal form and level	Comments
Analog audio interfaces Explanation of signal names: P = positive, N = negative	GSM_EPP2	O	$V_O$max = 3.7Vpp See also Table 32.	The audio output is balanced and can directly operate an earpiece. If unused keep pins open.
	GSM_EPN2	O		
	GSM_EPP1	O	$V_O$max = 3.7Vpp See also Table 32.	Balanced audio output. Can be used to directly operate an earpiece. If unused keep pins open.
	GSM_EPN1	O		
	GSM_MICP1	I	R_I ≈ 50kΩ differential $V_I$max = 1.03Vpp See also Table 33.	Balanced microphone input. To be decoupled with 2 capacitors (C_K = 100nF), if connected to a microphone or another device. If unused keep pins open.
	GSM_MICN1	I		
	GSM_MICP2	I	R_I = 2kΩ differential $V_I$max = 1.03Vpp See also Table 33.	Balanced microphone input. Can be used to directly feed an active microphone. If used for another signal source, e.g. op amp, to be decoupled with capacitors. If unused keep pins open.
	GSM_MICN2	I		
Antenna power	GPS_VANT	I	Max. 8V DC Max. 25 mA	Power supply for active antenna; in case of 3V antenna can be connected to GPS_VCC_RF
Internal antenna power	GPS_VCC_RF	O	Typ.: 3.0V ±5% DC Max: 25 mA	Regulates 3V output for feeding a 3V active GPS antenna
GPS power	GPS_VCC	I	Typ.: 3.3V ±5% DC	Typ. 80 mA (without feeding GPS_VCC_RF) 50 mV ripple
Digital Input / Output	GPS_GPIO0	I/O	CMOS 3.3V DC level	See Chapter 4.5
Digital Input / Output	GPS_GPIO1	I/O	CMOS 3.3V DC level	See Chapter 4.5
Digital Input / Output	GPS_GPIO3	I/O	CMOS 3.3V DC level	See Chapter 4.5
Digital Input / Output	GPS_GPIO4	I/O	CMOS 3.3V DC level	Output for Trickle Power mode. Connect externally to GPS_RFPC1. Usable as LED control output, see Chapter 4.7
Digital Input / Output	GPS_GPIO5	I/O	CMOS 3.3V DC level	See Chapter 4.5
Digital Input / Output	GPS_GPIO6	I/O	CMOS 3.3V DC level	See Chapter 4.5
Digital Input / Output	GPS_GPIO7	I/O	CMOS 3.3V DC level	See Chapter 4.5
Digital Input / Output	GPS_GPIO8	I/O	CMOS 3.3V DC level	Output for Trickle Power mode. Connect externally to GPS_RFPC0. Usable as LED control output, see Chapter 4.7
Digital Input / Output	GPS_GPIO10	I/O	CMOS 3.3V DC level	See Chapter 4.5
Digital Input / Output	GPS_GPIO13	I/O	CMOS 3.3V DC level	See Chapter 4.5

Function	Signal name	IO	Signal form and level	Comments
Digital Input / Output	GPS_GPIO14	I/O	CMOS 3.3V DC level	See Chapter 4.5
Digital Input / Output	GPS_GPIO15	I/O	CMOS 3.3V DC level	See Chapter 4.5
GPS Reset	GPS_M-RST	I	CMOS 3.3V DC level	Active low reset input
Serial1 Rx	GPS_SDI1	I	CMOS 3.3V DC level	See Chapter 4.6
Serial1 Tx	GPS_SDO1	O	CMOS 3.3V DC level	See Chapter 4.6
Digital Input	GPS_BOOTSEL	I	CMOS 3.3V DC level	For re-programming the Flash must be set to High
Digital Input	GPS_RFPC1	I	CMOS 3.3V DC level	Connect to GPS_GPIO4 including the pull-up resistors as shown in Figure 58
Digital Input	GPS_RFPC0	I	CMOS 3.3V DC level	Connect to GPS_GPIO8 including the pull-up resistors as shown in Figure 58
Serial2 Rx	GPS_SDI2	I	CMOS 3.3V DC level	See Chapter 4.6
Serial2 Tx	GPS_SDO2	0	CMOS 3.3V DC level	See Chapter 4.6

CMOS 3.3V level:

Input High	=	2.0 – 3.3	V DC; I_leakage = 2µA
Input Low	=	0 – 0.8	V DC, I_leakage = 2µA
Output High	=	min. 2.4	V DC, I_{oh}= 2mA
Output Low	=	max 0.4	V DC, I_{oh}= 2mA

6.4 Power supply ratings

Table 28: Power supply ratings (GSM part)

Parameter	Description	Conditions	Min	Typ	Max	Unit
GSM_BATT+	Supply voltage	Reference points on XT55/56: TP GSM_BATT+ and TP GND (see Figure 50). Voltage must stay within the min/max values, including voltage drop, ripple, spikes.	3.3	4.2	4.8	V
	Voltage drop during transmit burst	Normal condition, power control level for $P_{out\ max}$			400	mV
	Voltage ripple	Normal condition, power control level for $P_{out\ max}$ @ f<200kHz @ f>200kHz		 50 2		 mV
I_{GSM_BATT+}	Average supply current[3]	POWER DOWN mode		50	100	µA
		SLEEP mode @ DRX = 6		3		mA
		IDLE mode GSM850		15		mA
		EGSM 900		15		
		GSM 1800/1900		15		
		TALK mode GSM850[1) 4)]		260		mA
		EGSM 900[1) 4)]		260		
		GSM 1800/1900[2) 4)]		180		
		IDLE GPRS GSM850		15		mA
		EGSM 900		15		
		GSM 1800/1900		15		
		DATA mode GPRS, (4 Rx, 1 Tx) GSM 850[1) 4)]		300		mA
		EGSM 900[1) 4)]		300		
		GSM 1800/1900[2) 4)]		230		
		DATA mode GPRS, (3 Rx, 2 Tx) GSM 850[1) 4)]		450		mA
		EGSM 900[1) 4)]		450		
		GSM 1800/1900[2) 4)]		330		
	Peak supply current (during transmission slot every 4.6ms)	Power control level [1)]		1.6		A

[1)] Power control level PCL 5

[2)] Power control level PCL 0

[3)] All average supply current values @ I_{GSM_VDD} = 0mA

[4)] Test conditions: 50Ω

Table 29: Power supply ratings (GPS part)

Parameter	Description	Conditions	Min	Typ	Max	Unit
GPS_VCC	Supply voltage		3.14	3.3	3.46	V
I_{GPS_VCC}	Average supply current	Continuous mode (without antenna feeding on GPS_VCC_RF)		80	100	mA

Please note that the stated current values are depending on the used mode of the module

6.4.1 Current consumption during GSM transmit burst

The diagrams provided in Figure 46 and Figure 47 illustrate the typical current consumption of the application caused during a transmit burst. The typical peak current is shown vs. the power control level for 900 MHz, 1800 MHz and 1900 MHz and vs. the return loss of the antenna.
Test conditions: All measurements have been performed at T_{amb}= 25°C, $V_{GSM_BATT+\ nom}$ = 4.1V. Reference points for measuring the voltage are the GSM_BATT+ and GND test points on the back side of the module. The curves are for one TX slot (for example a voice call, CSD call or Class 8 GPRS). Curves for Class 10 GPRS activities (2 TX slots) are shown too.
Changing the conditions, e.g. in terms of temperature or voltage, will cause different results.

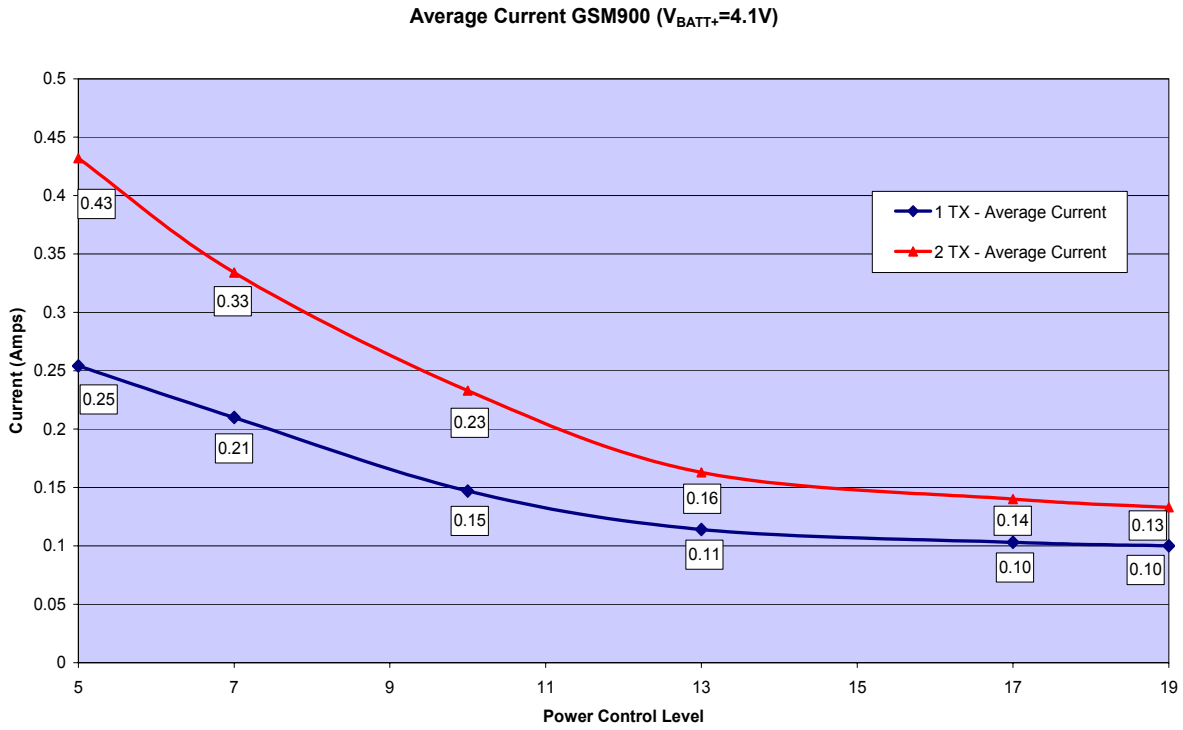

Figure 41: Typical current consumption vs. return loss in EGSM 900 network

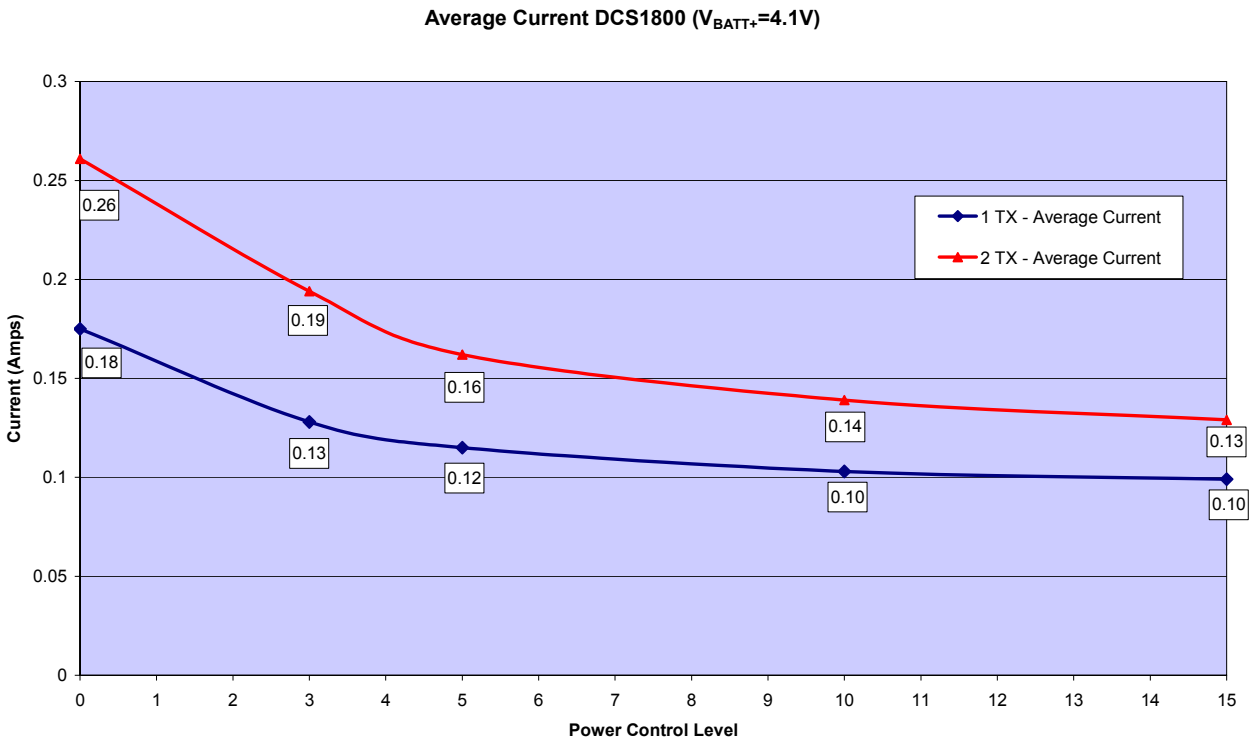

Figure 42: Typical current consumption vs. return loss in GSM 1800 network

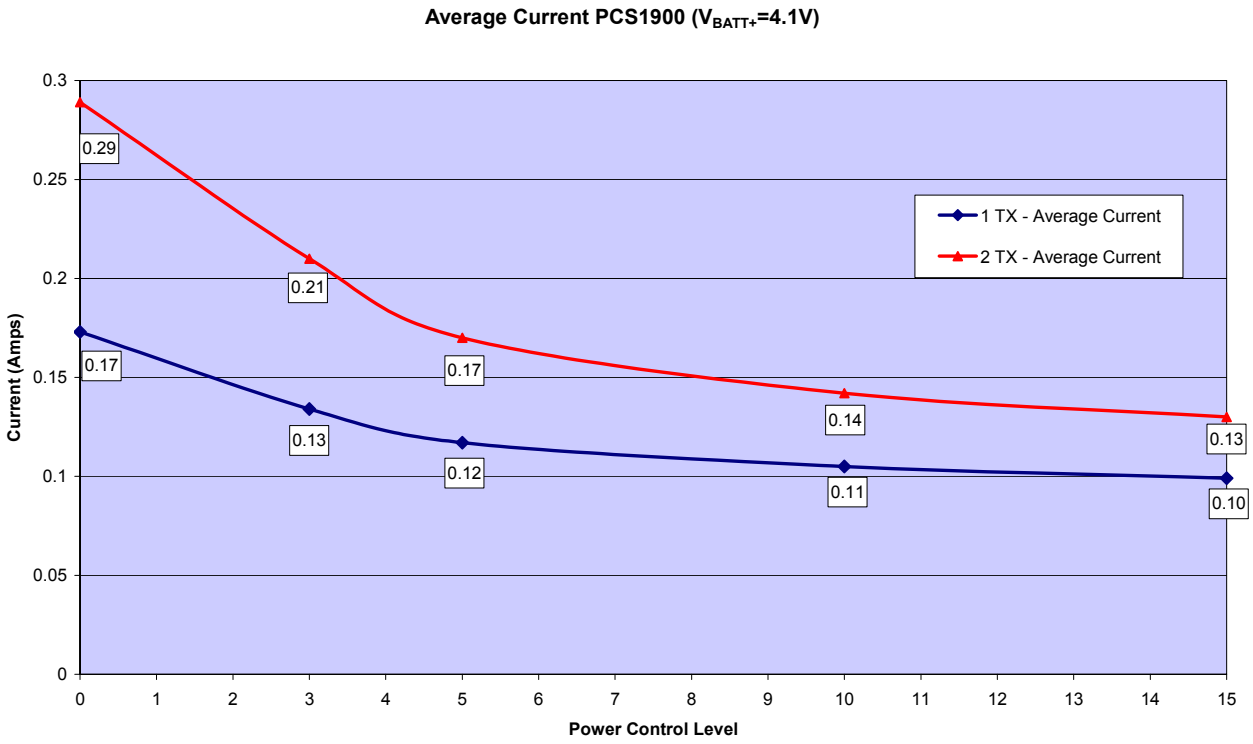

Figure 43: Typical current consumption vs. return loss in GSM 1900 network

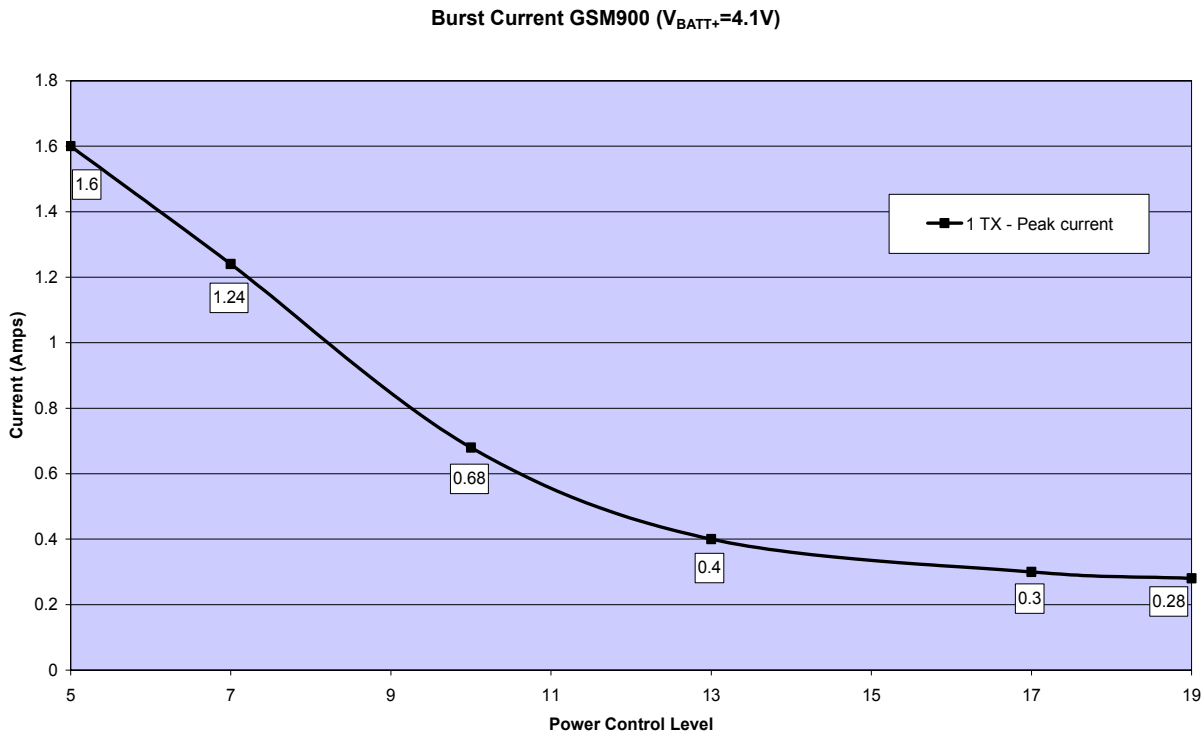

Figure 44: Peak current consumption during transmit burst in EGSM 900 network

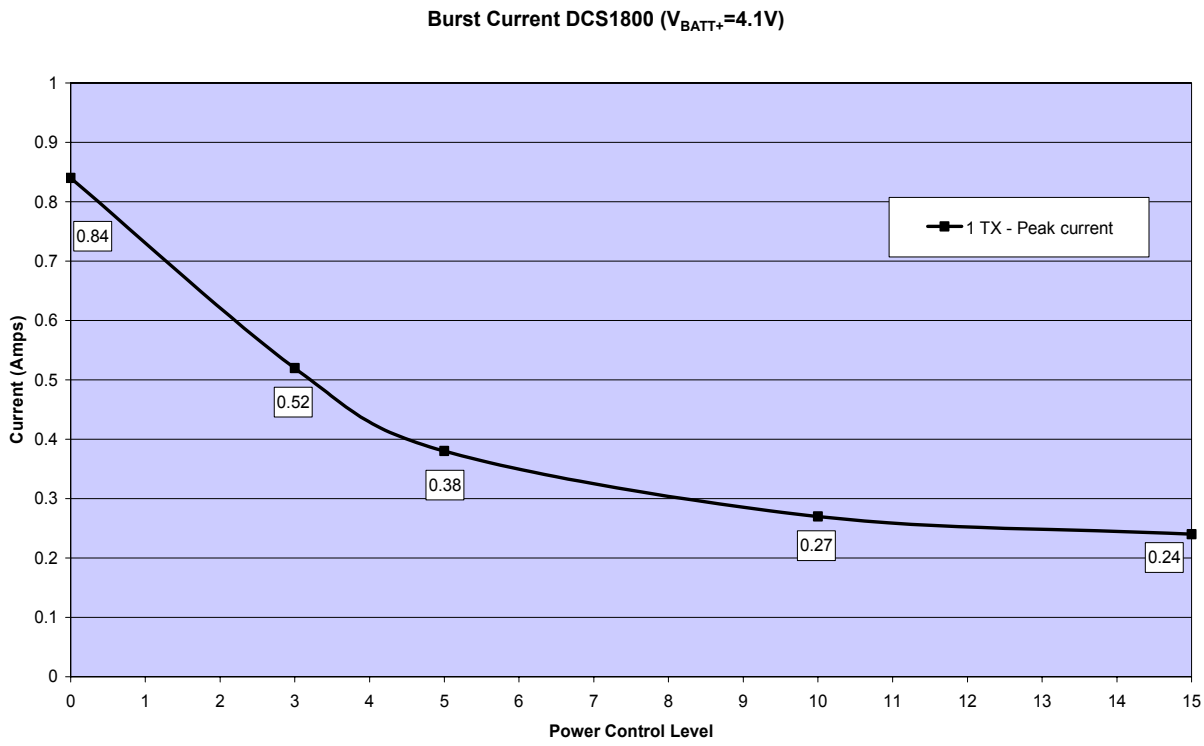

Figure 45: Peak current consumption during transmit burst in GSM 1800 network

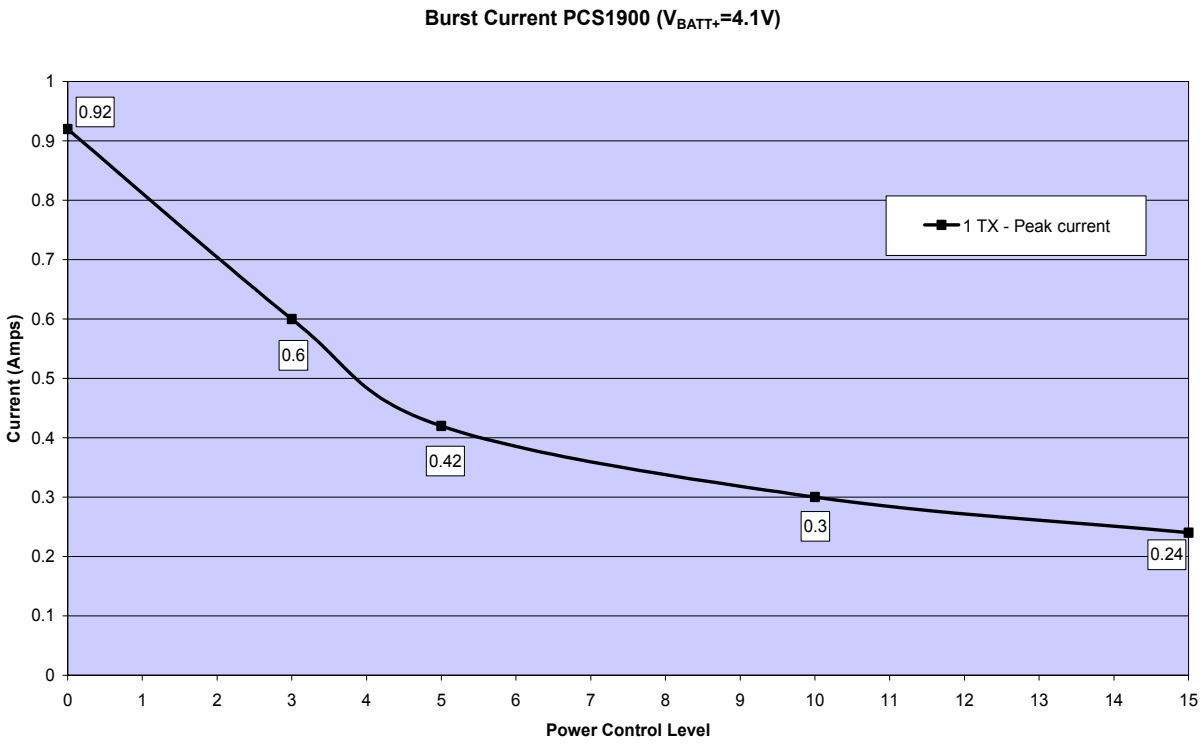

Test conditions: T_{amb}= 25°C, $V_{GSM_BATT+\ nom}$ = 4.1V

Figure 46: Peak current consumption during transmit burst in GSM 1900 network

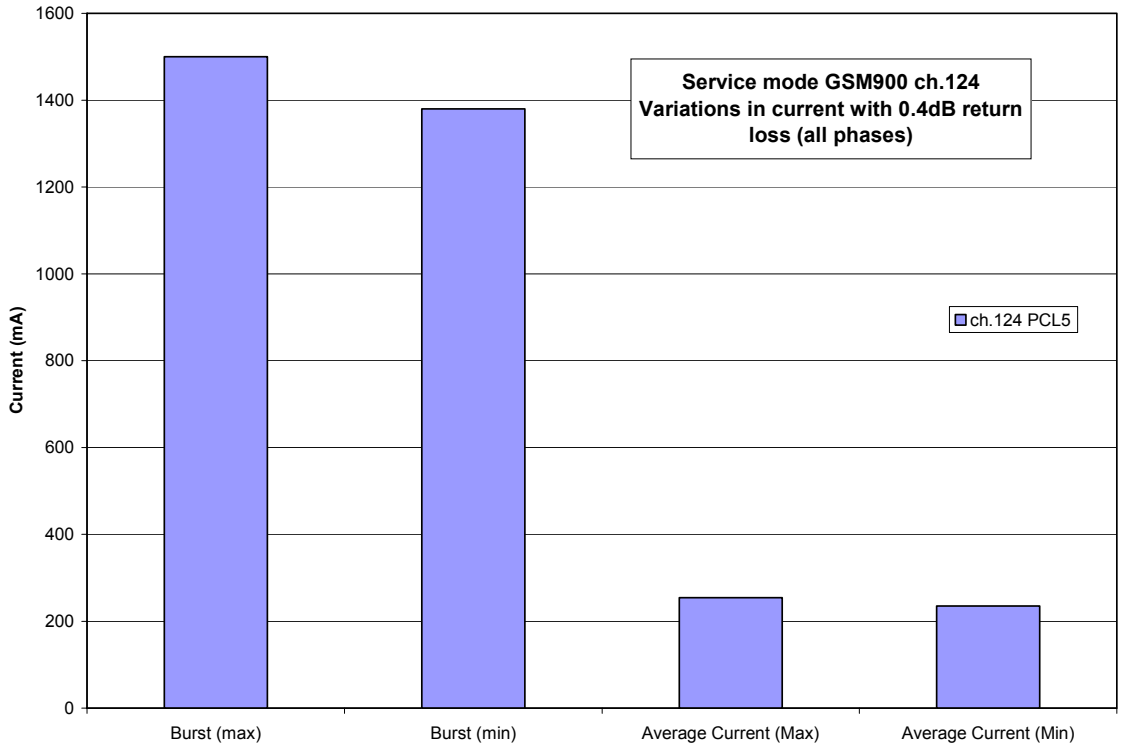

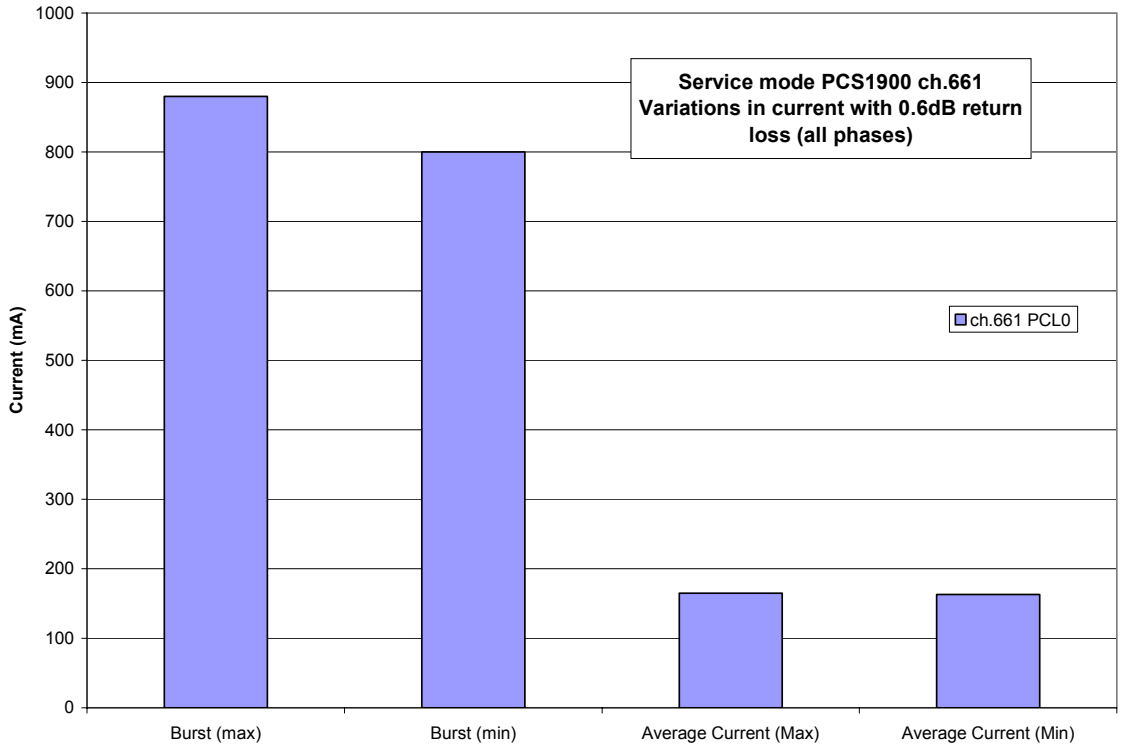

Test conditions: T_{amb}= 25°C, $V_{GSM_BATT+\ nom}$ = 4.1V measured at TP GSM_BATT+ and GND, 1 TX slot

Figure 47: Typical current consumption vs. return loss

6.5 Electrical characteristics of the voiceband part

6.5.1 Setting audio parameters by AT commands

The audio modes 2 to 6 can be adjusted according to the parameters listed below. Each audio mode is assigned a separate set of parameters.

Table 30: Audio parameters adjustable by AT command

Parameter	Influence to	Range	Gain range	Calculation
inBbcGain	MICP/MICN analog amplifier gain of baseband controller before ADC	0...7	0...42dB	6dB steps
inCalibrate	digital attenuation of input signal after ADC	0...32767	-∞...0dB	20 * log (inCalibrate/ 32768)
outBbcGain	EPP/EPN analog output gain of baseband controller after DAC	0...3	0...-18dB	6dB steps
outCalibrate[n] n = 0...4	digital attenuation of output signal after speech decoder, before summation of sidetone and DAC present for each volume step[n]	0...32767	-∞...+6dB	20 * log (2 * outCalibrate[n]/ 32768)
sideTone	digital attenuation of sidetone is corrected internally by outBbcGain to obtain a constant sidetone independent of output volume	0...32767	-∞...0dB	20 * log (sideTone/ 32768)

Note: The parameters inCalibrate, outCalibrate and sideTone accept also values from 32768 to 65535. These values are internally truncated to 32767.

6.5.2 Audio programming model

The audio programming model shows how the signal path can be influenced by varying the AT command parameters. The model is the same for all three interfaces, except for the parameters <outBbcGain> and <inBbcGain> which cannot be modified if the digital audio interface is being used, since in this case the DAC is switched off.

The parameters inBbcGain and inCalibrate can be set with AT^SNFI. All the other parameters are adjusted with AT^SNFO.

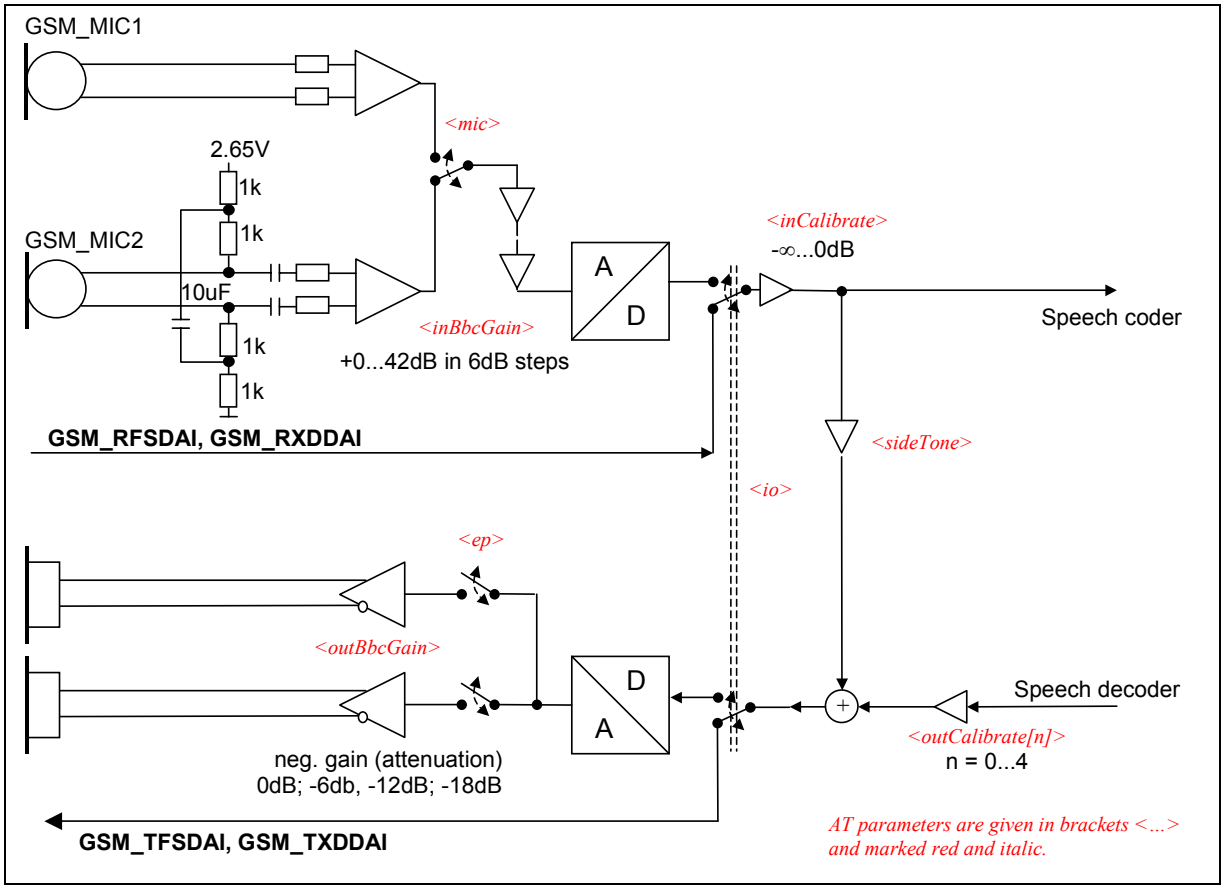

Figure 48: AT audio programming model

6.5.3 Characteristics of audio modes

The electrical characteristics of the voiceband part depend on the current audio mode set with the AT^SNFS command.

Table 31: Voiceband characteristics (typical)

Audio mode no. AT^SNFS=	**1** (Default settings, not adjustable)	**2**	**3**	**4**	**5**	**6**
Name	Default Handset	Basic Handsfree	Headset	User Handset	Plain Codec 1	Plain Codec 2
Purpose	DSB with Votronic handset	Siemens Car Kit Portable	Siemens Headset	DSB with individual handset	Direct access to speech coder	Direct access to speech coder
Gain setting via AT command. Defaults: inBbcGain outBbcGain	Fix 4 (24dB) 1 (-6dB)	Adjustable 2 (12dB) 1 (-6dB)	Adjustable 5 (30dB) 2 (-12dB)	Adjustable 4 (24dB) 1 (-6dB)	Adjustable 0 (0dB) 0 (0dB)	Adjustable 0 (0dB) 0 (0dB)
Default audio interface	1	2	2	1	1	2 [3)]
Power supply	ON (2.65V)	ON (2.65V)	ON (2.65V)	ON (2.65V)	OFF (GND)	OFF (GND)
Sidetone	ON	---	Adjustable	Adjustable	Adjustable	Adjustable
Volume control	OFF	Adjustable	Adjustable	Adjustable	Adjustable	Adjustable
Limiter (receive)	ON	ON	ON	ON	---	---
Compressor (receive)	---	OFF[1)]	---	---	---	---
AGC (send)	---	---	ON	---	---	---
Echo control (send)	Suppression	Cancellation + suppression	---	Suppres-sion	---	---
Noise suppression[2)]	---	up to 10dB	10dB	---	---	---
MIC input signal for 0dBm0 @ 1024 Hz (default gain)	23mV	58mV	7.5mV @ -3dBm0 due to AGC	23mV	315mV	315mV
EP output signal in mV rms. @ 0dBm0, 1024 Hz, no load (default gain); @ 3.14 dBm0	284mV	120mV default @ max volume	300mV default @ max volume	284mV default @ max volume	895mV 3.7Vpp	895mV 3.7Vpp
Sidetone gain at default settings	22.8dB	-∞ dB	Affected by AGC, 13dB @ 7.5mV (MIC)	22.8dB	-∞ dB	-∞ dB

1) Adaptive, receive volume increases with higher ambient noise level. The compressor can be activated by loading an application specific audio parameter set (see [9]).

2) In audio modes with noise reduction, the microphone input signal for 0dBm shall be measured with a sine burst signal for a tone duration of 5 seconds and a pause of 2 sec. The sine signal appears as noise and, after approx. 12 sec, is attenuated by the noise reduction by up to 10dB.

[3] Audio mode 5 and 6 are identical. With AT^SAIC, you can easily switch mode 5 to the second interface. Therefore, audio mode 6 is only kept for compatibility to earlier Siemens GSM products.

Note: With regard to acoustic shock, the cellular application must be designed to avoid sending false AT commands that might increase amplification, e.g. for a high sensitive earpiece. A protection circuit should be implemented in the cellular application.

6.5.4 Voiceband receive path

Test conditions:

- The values specified below were tested to 1kHz and 0dB gain stage, unless otherwise stated.
- Parameter setup: gs = 0dB means audio mode = 5 for GSM_EPP1 to GSM_EPN1 and 6 for GSM_EPP2 to GSM_EPN2, inBbcGain= 0, inCalibrate = 32767, outBbcGain = 0, OutCalibrate = 16384, sideTone = 0.

Table 32: Voiceband receive path

Parameter	Min	Typ	Max	Unit	Test condition / remark
Differential output voltage (peak to peak)	3.33	3.7	4.07	V	from GSM_EPPx to GSM_EPNx *gs* = 0dB @ 3.14 dBm0 no load
Differential output gain settings (*gs*) at 6dB stages (outBbcGain)	-18		0	dB	Set with AT^SNFO
Fine scaling by DSP (outCalibrate)	-∞		0	dB	Set with AT^SNFO
Output differential DC offset			100	mV	*gs* = 0dB, outBbcGain = 0 and -6dB
Differential output resistance		2		Ω	from GSM_EPPx to GSM_EPNx
Differential load capacitance			1000	pF	from GSM_EPPx to GSM_EPNx
Absolute gain accuracy			0.8	dB	Variation due to change in temperature and life time
Attenuation distortion			1	dB	for 300...3900Hz, @ GSM_EPPx/ GSM_EPNx (333Hz) / @ GSM_EPPx/ GSM_EPNx (3.66kHz)
Out-of-band discrimination	60			dB	for *f* > 4kHz with in-band test signal@ 1kHz and 1kHz RBW

gs = gain setting

6.5.5 Voiceband transmit path

Test conditions:

- The values specified below were tested to 1kHz and 0dB gain stage, unless otherwise stated.
- Parameter setup: Audio mode = 5 for GSM_MICP1 to GSM_MICN1 and 6 for GSM_MICP2 to GSM_MICN2, inBbcGain= 0, inCalibrate = 32767, outBbcGain = 0, OutCalibrate = 16384, sideTone = 0

Table 33: Voiceband transmit path

Parameter	Min	Typ	Max	Unit	Test condition/Remark
Input voltage (peak to peak) GSM_MICP1 to GSM_MICN1, GSM_MICP2 to GSM_MICN2			1.03	V	
Input amplifier gain in 6dB steps (inBbcGain)	0		42	dB	Set with AT^SNFI
Fine scaling by DSP (inCalibrate)	-∞		0	dB	Set with AT^SNFI
Input impedance GSM_MIC1		50		kΩ	
Input impedance GSM_MIC2		2.0		kΩ	
Microphone supply voltage ON Ri = 4kΩ (GSM_MIC2 only)	2.57 2.17 1.77	2.65 2.25 1.85	2.73 2.33 1.93	V V V	no supply current @ 100µA @ 200µA
Microphone supply voltage OFF; Ri = 4kΩ (GSM_MIC2 only)		0		V	
Microphone supply in POWER DOWN mode					See Figure 16

6.6 Air interface of the XT55/56 GSM part

Test conditions: All measurements have been performed at T_{amb}= 25°C, $V_{GSM_BATT+\ nom}$ = 4.1V. The reference points used on XT55/56 are the GSM_BATT+ and GND contacts (test points are shown in Figure 50).

Table 34: Air Interface

Parameter		Min	Typ	Max	Unit
Frequency range	GSM 850 [3]	824		849	MHz
Uplink (MS → BTS)	E-GSM 900 [4]	880		915	MHz
	GSM 1800	1710		1785	MHz
	GSM 1900	1850		1910	MHz
Frequency range	GSM 850 [3]	869		894	MHz
Downlink (BTS → MS)	E-GSM 900 [4]	925		960	MHz
	GSM 1800	1805		1880	MHz
	GSM 1900	1930		1990	MHz
RF power @ ARP with 50Ω load	GSM 850 [3]	31	33	35	dBm
	E-GSM 900 [4] [1]	31	33	35	dBm
	GSM 1800 [2]	28	30	32	dBm
	GSM 1900	28	30	32	dBm
Number of carriers	GSM 850 [3]		124		
	E-GSM 900 [4]		174		
	GSM 1800		374		
	GSM 1900		299		
Duplex spacing	GSM 850 [3]		45		MHz
	E-GSM 900 [4]		45		MHz
	GSM 1800		95		MHz
	GSM 1900		80		MHz
Carrier spacing			200		kHz
Multiplex, Duplex		TDMA / FDMA, FDD			
Time slots per TDMA frame			8		
Frame duration			4.615		ms
Time slot duration			577		µs
Modulation		GMSK			
Receiver input sensitivity @ ARP	GSM 850 [3]	-102	-107		dBm
BER Class II < 2.4%	E-GSM 900 [4]	-102	-107		dBm
	GSM 1800	-102	-106		dBm
	GSM 1900	-102	-105.5		dBm

[1] Power control level PCL 5 [2] Power control level PCL 0 [3] XT56 only [4] XT55 only

6.7 Electrostatic discharge

The GSM engine is not protected against Electrostatic Discharge (ESD) in general. Consequently, it is subject to ESD handling precautions that typically apply to ESD sensitive components. Proper ESD handling and packaging procedures must be applied throughout the processing, handling and operation of any application that incorporates a XT55/56 module.

Special ESD protection provided on XT55/56:
Antenna interface: one spark discharge line (spark gap)
SIM interface: clamp diodes for protection against overvoltage.
The remaining ports of XT55/56 are not accessible to the user of the final product (since they are installed within the device) and therefore, are only protected according to the "Human Body Model" requirements.

XT55/56 has been tested according to the EN 61000-4-2 standard. The measured values can be gathered from the following table.

Table 35: Measured electrostatic values

Specification / Requirements	Contact discharge	Air discharge
ETSI EN 301 489-7		
ESD at SIM port (GSM)	± 4kV	± 8kV
ESD at GSM antenna port	± 4kV	± 8kV
Indirect ESD to GSM part	± 4kV	-
Indirect ESD to GPS part	± 4kV	-
Human Body Model (Test conditions: 1.5 kΩ, 100 pF)		
ESD at GPS antenna port	± 1kV	
ESD at all other ports	± 1kV	
Please note that the values may vary with the individual application design. For example, it matters whether or not the application platform is grounded over external devices like a computer or other equipment, such as the Siemens reference application described in Chapter 8.		

6.8 Reliability characteristics

The test conditions stated below are an extract of the complete test specifications.

Table 36: Summary of reliability test conditions

Type of test	Conditions	Standard
Vibration	Frequency range: 10-20 Hz; acceleration: 3.1mm amplitude Frequency range: 20-500 Hz; acceleration: 5g Duration: 2h per axis = 10 cycles; 3 axes	DIN IEC 68-2-6
Shock half-sinus	Acceleration: 500g Shock duration: 1msec 1 shock per axis 6 positions (± x, y and z)	DIN IEC 68-2-27
Dry heat	Temperature: +70 ±2°C Test duration: 16 h Humidity in the test chamber: < 50%	EN 60068-2-2 Bb ETS 300019-2-7
Temperature change (shock)	Low temperature: -40°C ±2°C High temperature: +85°C ±2°C Changeover time: < 30s (dual chamber system) Test duration: 1 h Number of repetitions: 100	DIN IEC 68-2-14 Na ETS 300019-2-7
Damp heat cyclic	High temperature: +55°C ±2°C Low temperature: +25°C ±2°C Humidity: 93% ±3% Number of repetitions: 6 Test duration: 12h + 12h	DIN IEC 68-2-30 Db ETS 300019-2-5
Cold (constant exposure)	Temperature: -40 ±2°C Test duration: 16 h	DIN IEC 68-2-1

7 Mechanics

The following chapters describe the mechanical dimensions of XT55/56 and give recommendations for integrating XT55/56 into the host application.

7.1 Mechanical dimensions of XT55/56

Figure 49 shows the top view of XT55/56. For further details see Figure 51.

Size: 35.0 ± 0.15mm x 53.0 ± 0.15mm x 5.1 ± 0.2mm
Weight: 11g

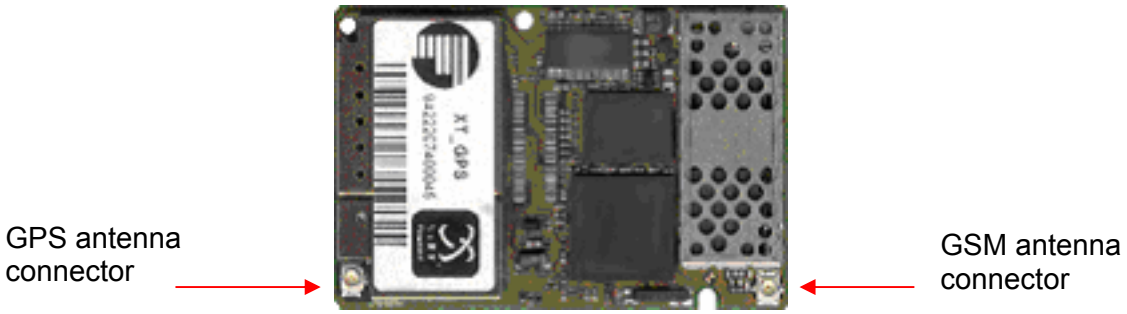

Figure 49: XT55/56 – top view

Figure 50 shows the bottom view of XT55/56 and marks the test points and pads for GSM antenna connection.

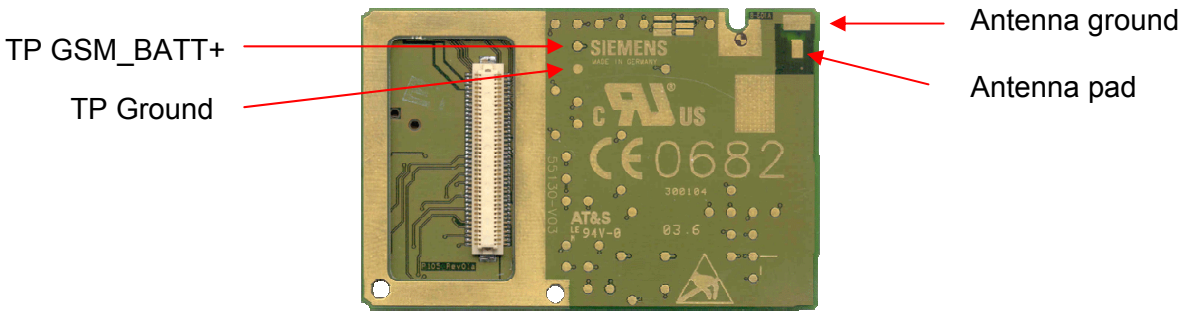

Figure 50: XT55/56 bottom view

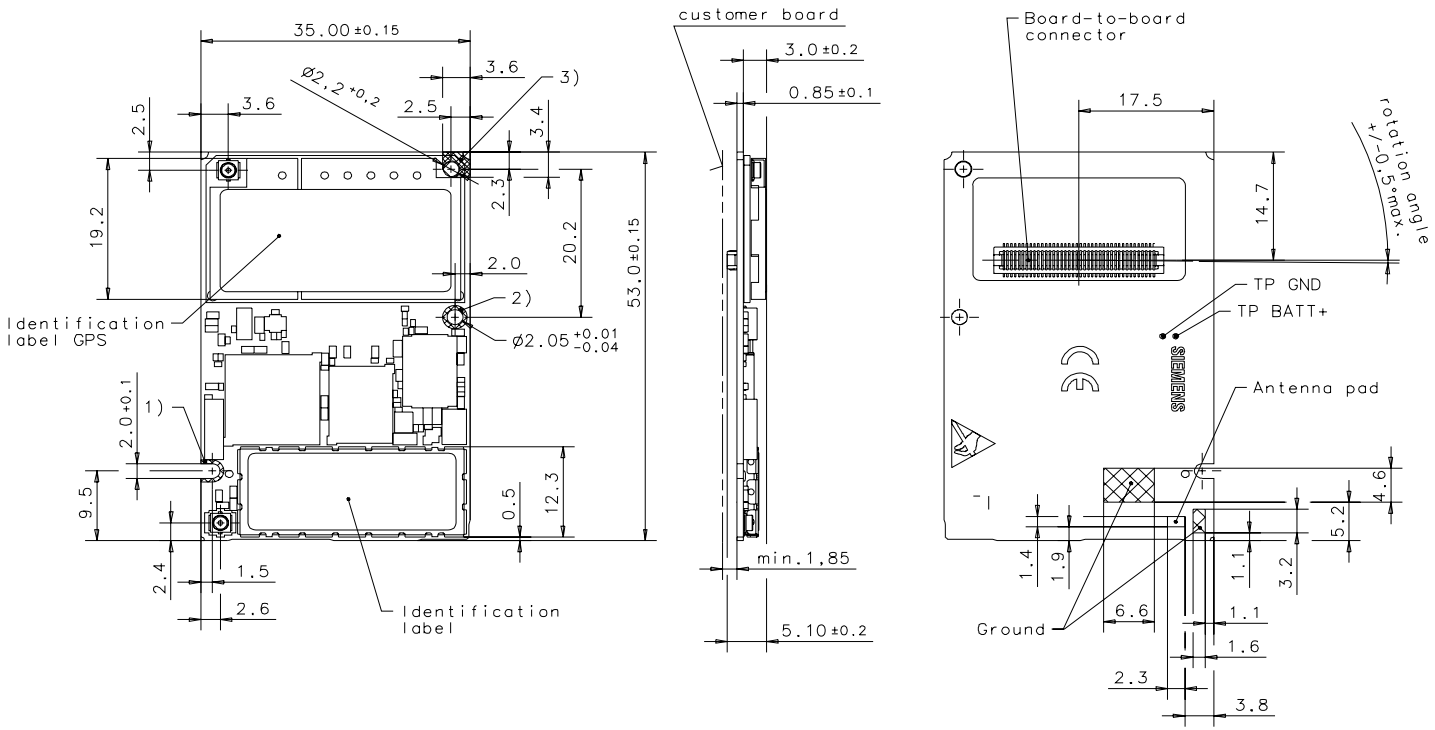

1) max. Ø 3 mm mounting area
2) max. Ø 3,2 mm mounting area
3) 3.6 x 3.4 mm mounting area

All dimensions in millimeters

Figure 51: Mechanical dimensions of XT55/56

7.2 Mounting XT55/56 onto the application platform

There are many ways to properly install XT55/56 in the host device. An efficient approach is to mount the XT55/56 PCB to a frame, plate, rack or chassis.

When assembling the XT55/56 module plug the B2B connector to the mating header in your application with applying carefully pressure to that side opposite to the B2B connector (labeled with “XT_GPS”).

Fasteners can be M1.6 or M1.8 screws plus suitable washers, circuit board spacers, or customized screws, clamps, or brackets. Screws must be inserted with the screw head on the bottom of the XT55/56 PCB. In addition, the board-to-board connection can also be utilized to achieve better support.

Particular attention must be paid to the holes marked with an arrow in Figure 50.
The two holes are close to other components of XT55/56 and care must be taken to avoid contacting them. For example, you can insert plastic screws and plastic washers, or fasteners small enough not to protrude beyond the mounting areas specified in Figure 51.

In case you wish to connect the host device using the mounting hole enclosed by the dashed line it is strongly recommended to use a plastic dowel according to Figure 53. For ordering instructions refer to Table 39.

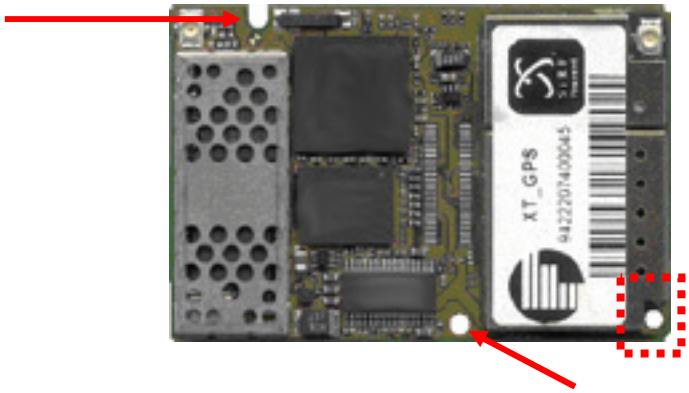

Figure 52: Mounting holes on XT55/56

For proper grounding it is strongly recommended to use the ground plane on the back side in addition to the five GND pins of the board-to-board connector. To avoid short circuits ensure that the remaining sections of the XT55/56 PCB do not come into contact with the host device since there are a number of test points. Figure 50 shows the positions of all test points.

To prevent mechanical damage, be careful not to force, bend or twist the module. Be sure it is positioned flat against the host device.

All the information you need to install an antenna is summarized in Chapter 5. Note that the antenna pad on the bottom of the XT55/56 PCB must not be influenced by any other PCBs, components or by the housing of the host device. It needs to be surrounded by a restricted space as described in Chapter 5.1.2.

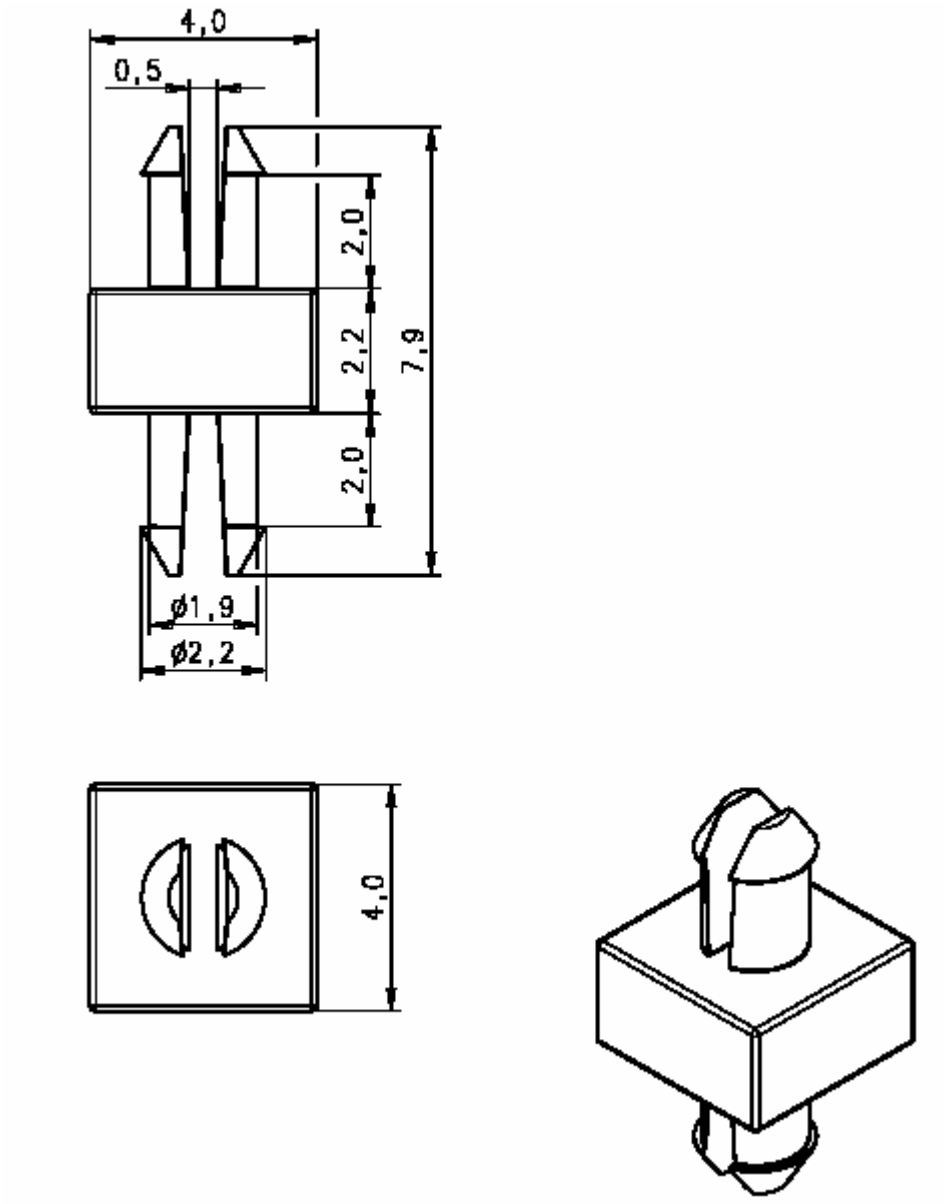

Figure 53: Recommended dowel

7.3 Board-to-board connector

This chapter provides specifications for the 80-pin board-to-board connector which serves as physical interface to the host application. The receptacle assembled on the XT55/56 PCB is type Hirose DF12C. Mating headers from Hirose are available in different stacking heights.

Table 37: Ordering information DF12 series

Item	Part number	Stacking height (mm)	HRS number
Receptacle on XT55/56	DF12C(3.0)-80DS-0.5V(81)	3.0	537-0733-9-81
Headers DF12 series	DF12D(3.0)-80DP-0.5V(81)	3.0	537-0803-2-81
	DF12E(3.0)-80DP-0.5V(81)	3.0	537-0838-7-81

Notes: The headers listed above are without boss and metal fitting. Please contact Hirose for details on other types of mating headers. Asterixed HRS numbers denote different types of packaging.

Table 38: Electrical and mechanical characteristics of the Hirose DF12C connector

Parameter	Specification (80 pin board-to-board connector)
Number of contacts	80
Quantity delivered	2000 connectors per tape & reel
Voltage	50V
Rated current	0.3A max per contact
Resistance	0.05 Ohm per contact
Dielectric withstanding voltage	500V RMS min
Operating temperature	-45°C...+125°C
Contact material	phosphor bronze (surface: gold plated)
Insulator material	PA , beige natural
Stacking height	3.0 mm
Insertion force	21.8N
Withdrawal force 1st	10N
Withdrawal force 50th	10N
Maximum connection cycles	50

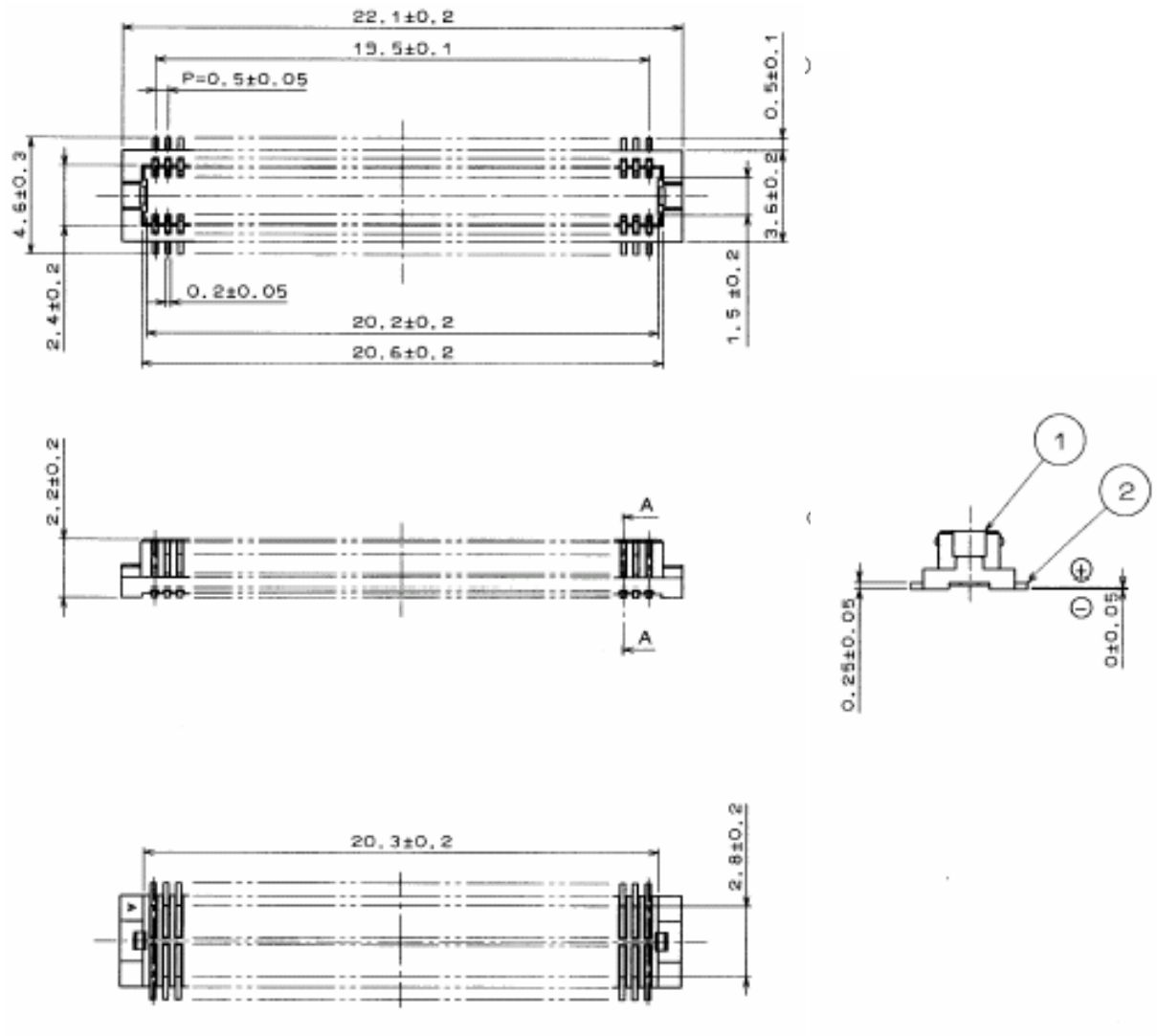

Figure 54: Mechanical dimensions of Hirose DF12 connector

8 Reference approval

8.1 Reference equipment for type approval

The Siemens reference setup submitted to type approve XT55/56 consists of the following components:

- Siemens XT55/56 cellular engine
- Development Support Box (DSB45)
- Flex cable (160 mm) from Hirose DF12C receptacle on XT55/56 to Hirose DF12 connector on DSB45. Please note that this cable is not included in the scope of delivery of DSB45.
- SIM card reader integrated on DSB45
- Handset type Votronic HH-SI-30.3/V1.1/0
- PC as MMI

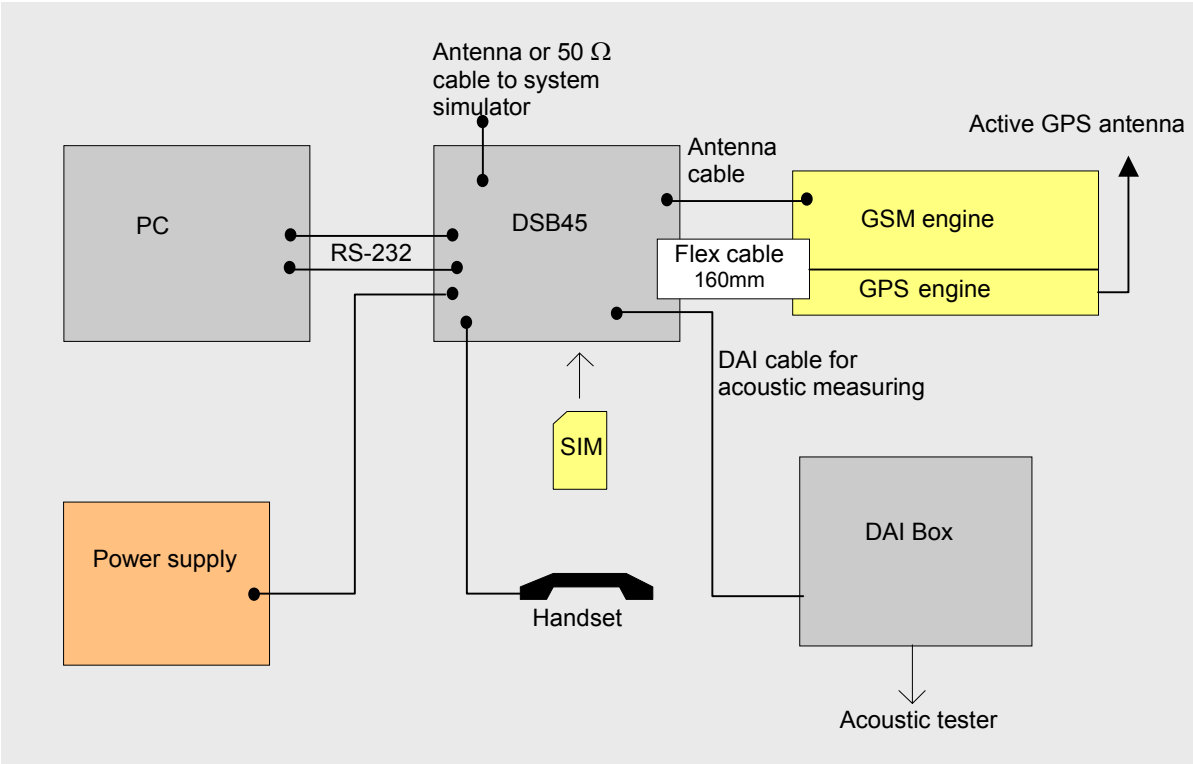

Figure 55: Reference equipment for approval

8.2 Compliance with FCC Rules and Regulations (XT55 only)

The FCC Equipment Authorization Certification for the *XT55* reference application described in Chapter 8.1 is listed under the

FCC identifier QIPXT55
IC: 267W-XT55
granted to Siemens AG.

The XT55 reference application registered under the above identifier is certified to be in accordance with the following Rules and Regulations of the Federal Communications Commission (FCC).

> "This device contains GSM 900MHz and GSM 1800MHz functions that are not operational in U.S. Territories.
> This device is to be used only for mobile and fixed applications. The antenna(s) used for this transmitter must be installed to provide a separation distance of at least 20 cm from all persons and must not be co-located or operating in conjunction with any other antenna or transmitter. Users and installers must be provided with antenna installation instructions and transmitter operating conditions for satisfying RF exposure compliance. Antennas used for this OEM module must not exceed 7dBi gain for mobile and fixed operating configurations. This device is approved as a module to be installed in other devices. Each OEM must obtain their own Certification for each device containing this module."

IMPORTANT: Manufacturers of mobile or fixed devices incorporating XT55 modules are advised to

- clarify any regulatory questions,
- have their completed product tested,
- have product approved for FCC compliance, and
- include instructions according to above mentioned RF exposure statements in end product user manual.

8.3 Compliance with FCC Rules and Regulations (XT56 only)

The FCC Equipment Authorization Certification for the *XT56* reference application described in Chapter 8.1 is listed under the

FCC identifier QIPXT56
IC: 267W-XT56
granted to Siemens AG.

The XT56 reference application registered under the above identifier is certified to be in accordance with the following Rules and Regulations of the Federal Communications Commission (FCC).

> "This device contains GSM 1800MHz function that is not operational in U.S. Territories. This device is to be used only for mobile and fixed applications. The antenna(s) used for this transmitter must be installed to provide a separation distance of at least 20 cm from all persons and must not be co-located or operating in conjunction with any other antenna or transmitter. Users and installers must be provided with antenna installation instructions and transmitter operating conditions for satisfying RF exposure compliance. Antennas used for this OEM module must not exceed 7dBi gain (GSM 1900) and 2.2dBi (GSM 850) for mobile and fixed operating configurations. This device is approved as a module to be installed in other devices.

IMPORTANT: Manufacturers of mobile or fixed devices incorporating XT56 modules are advised to

- clarify any regulatory questions,
- have their completed product tested,
- have product approved for FCC compliance, and
- include instructions according to above mentioned RF exposure statements in end product user manual.

9 Example applications

The XT55/56 module offers different options for integrating additional software, such as AVL and SiRF Demo software. For further details refer to [1] and [3].

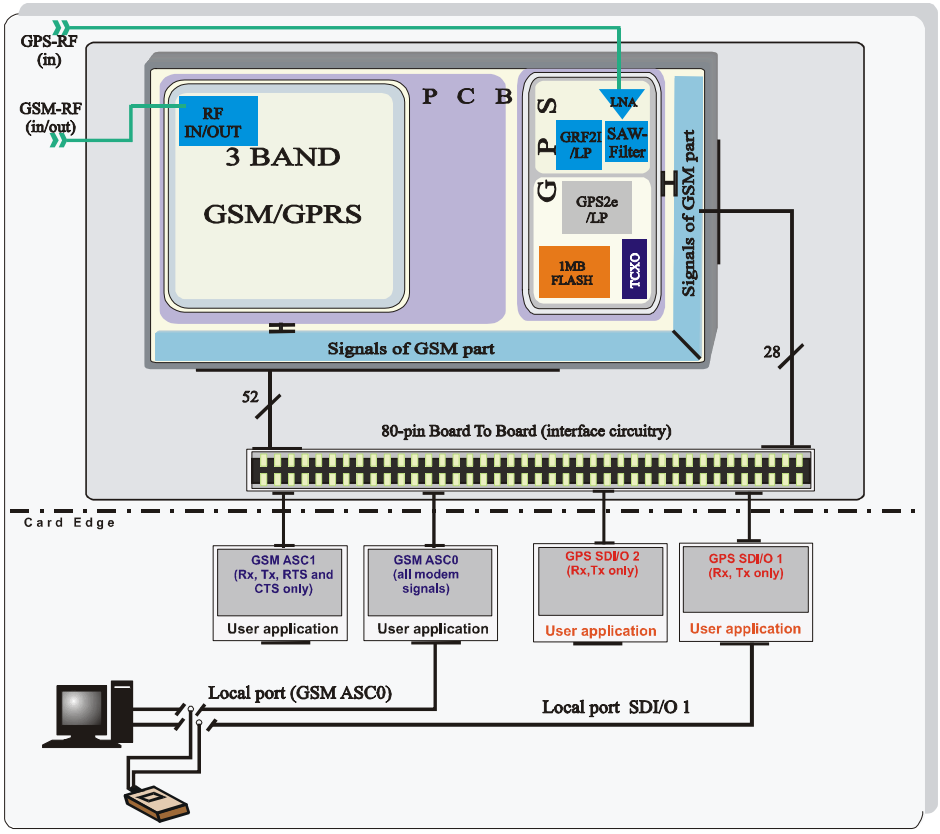

Figure 56: Block diagram of XT55/56 for SiRF Demo application

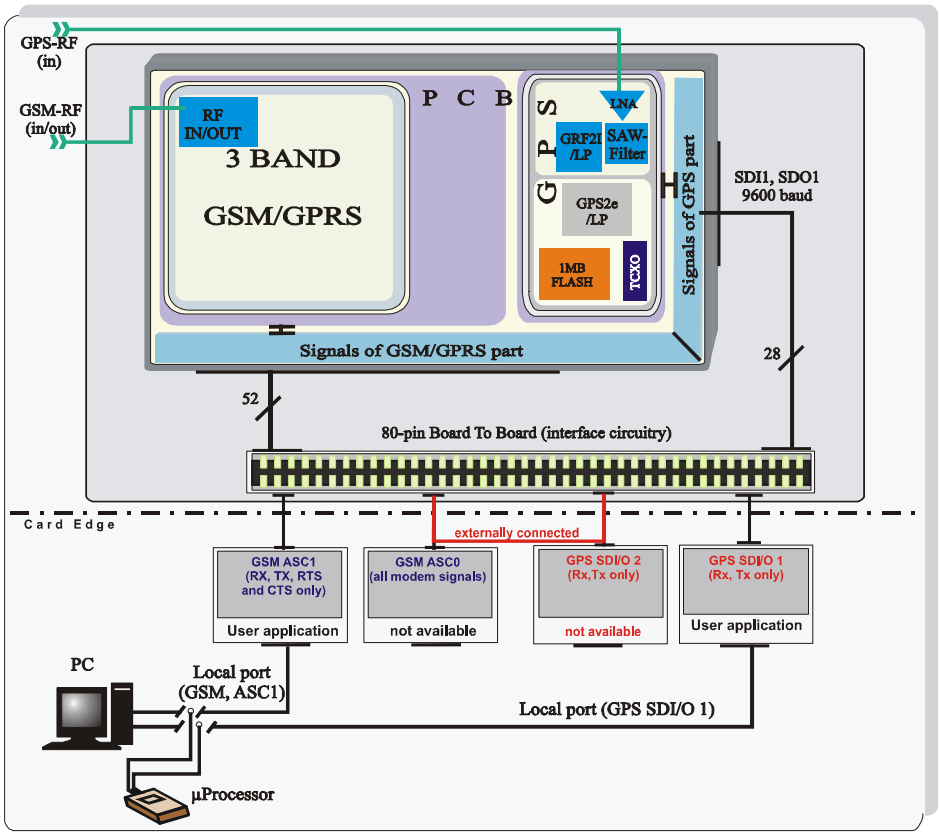

Figure 57: Block diagram of XT55/56 with AVL application (optional)

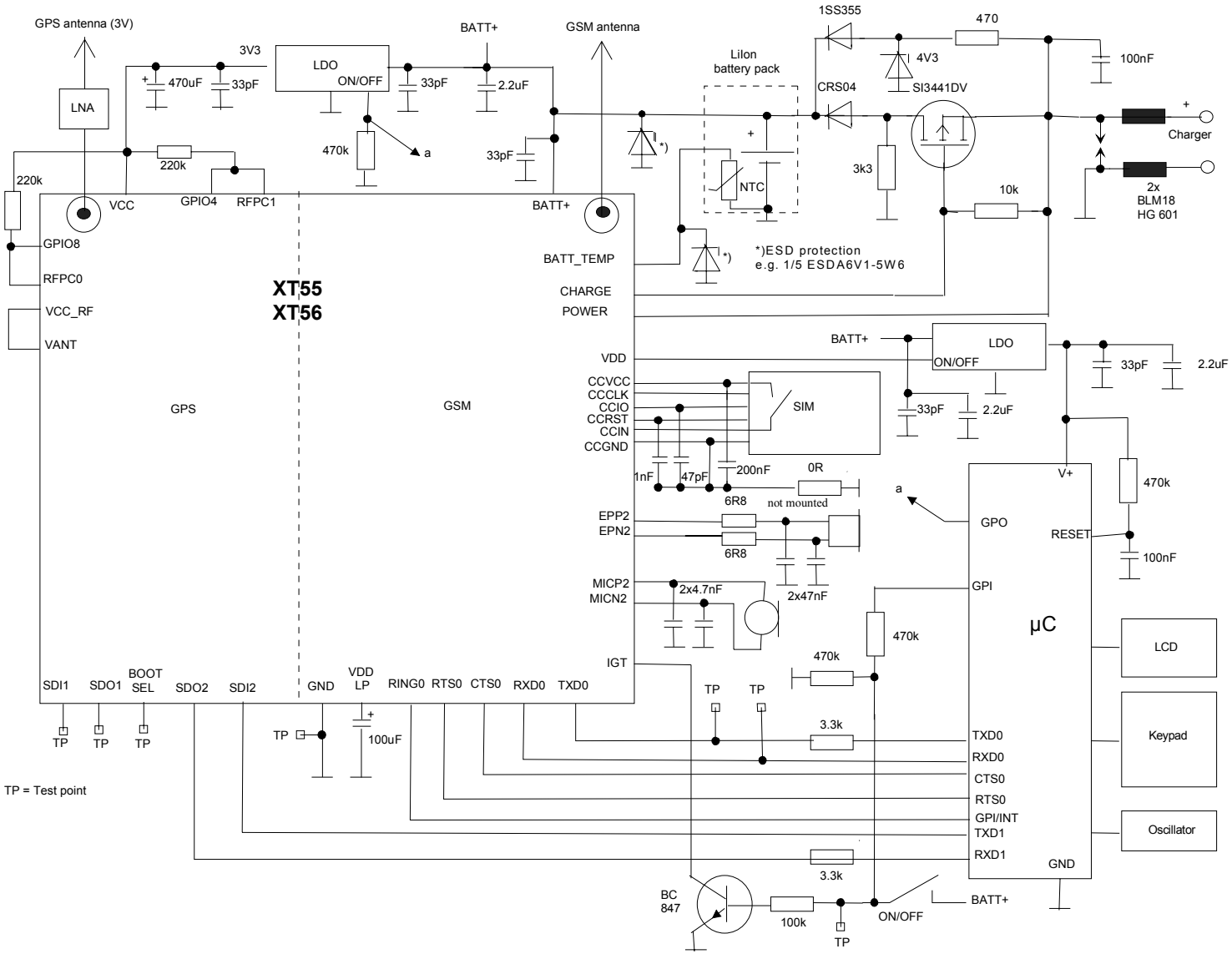

Figure 58: XT55/56 tracking phone with external µC (example application)

Figure 58 shows a sample application that incorporates an XT55/56 module and an external μC which controls the entire application.
This μC must provide two asynchronous serial interfaces for controlling the XT55/56. One serial interface (TXD0, RXD0, CTS0, RTS0) controls the GSM part. The other serial interface (TXD1, RXD1) controls the GPS part of the XT55/56 module. It is recommended to use an interrupt input of the external μC for RING0 detection.
If the application uses IP-based data connections (internet access via GPRS or CSD), the external μC is responsible for handling the IP protocol.
To update the GSM and GPS software the test points (TP) must be used.

Disclaimer
No warranty, either stated or implied, is provided on the sample schematic diagram shown in Figure 58 and the information detailed in this section. As functionality and compliance with national regulations depend to a great amount on the used electronic components and the individual application layout manufacturers are required to ensure adequate design and operating safeguards for their products using XT55/56 modules.

10 List of parts and accessories

Table 39: List of parts and accessories

Description	Supplier	Ordering information
XT55 XT56	Siemens	Siemens ordering number: Standard module: L36880-N8380-B100 Customer IMEI SIM Lock mode: L36880-N8381-A100 Standard module: L36880-N8385-A100
Siemens Car Kit Portable	Siemens	Siemens ordering number: L36880-N3015-A117
DSB45 Support Box	Siemens	Siemens ordering number: L36880-N8301-A100
BB35 Bootbox	Siemens	Siemens ordering number: L36880-N8102-A100-1
Votronic Handset	VOTRONIC	Votronic HH-SI-30.3/V1.1/0 VOTRONIC Entwicklungs- und Produktionsgesellschaft für elektronische Geräte mbH Saarbrücker Str. 8 66386 St. Ingbert Germany Phone: +49-(0)6 89 4 / 92 55-0 Fax: +49-(0)6 89 4 / 92 55-88 e-mail: contact@votronic.com
SIM card holder incl. push button ejector and slide-in tray	Molex	Ordering numbers: 91228 91236 Sales contacts are listed in Table 40.
DF12C board-to-board connector	Hirose	See Chapter 7.3 for details on receptacle on XT55/56 and mating headers. Sales contacts are listed in Table 41.
U.FL-R-SMT antenna connector	Hirose	See Chapter 5.3 for details on U.FL-R-SMT connector, mating plugs and cables. Sales contacts are listed in Table 41.
Mounting dowel	Falcom	Ordering number: 511287

Description	Supplier	Ordering information
GPS antenna	Falcom	Ordering numbers: FAL-ANT-6 FAL-ANT-7 To place orders or obtain more information please contact: Falcom Wireless Communications GmbH Gewerbering 6 98704 Langewiesen Germany Phone: +49-(0)-3677 8042-0 E-Mail: info@falcom.de Info: http://www.falcom.de

Table 40: Molex sales contacts (subject to change)

Molex For further information please click: http://www.molex.com/	Molex Deutschland GmbH Felix-Wankel-Str. 11 4078 Heilbronn-Biberach Germany Phone: +49-7066-9555 0 Fax: +49-7066-9555 29 Email: mxgermany@molex.com	American Headquarters Lisle, Illinois 60532 U.S.A. Phone: +1-800-78MOLEX Fax: +1-630-969-1352
Molex China Distributors Beijing, Room 1319, Tower B, COFCO Plaza No. 8, Jian Guo Men Nei Street, 100005 Beijing P.R. China Phone: +86-10-6526-9628 Phone: +86-10-6526-9728 Phone: +86-10-6526-9731 Fax: +86-10-6526-9730	Molex Singapore Pte. Ltd. Jurong, Singapore Phone: +65-268-6868 Fax: +65-265-6044	Molex Japan Co. Ltd. Yamato, Kanagawa, Japan Phone: +81-462-65-2324 Fax: +81-462-65-2366

Table 41: Hirose sales contacts (subject to change)

Hirose Ltd. For further information please click: http://www.hirose.com	Hirose Electric (U.S.A.) Inc 2688 Westhills Court Simi Valley, CA 93065 U.S.A. Phone: +1-805-522-7958 Fax: +1-805-522-3217	Hirose Electric GmbH Zeppelinstrasse 42 73760 Ostfildern Kemnat 4 Germany Phone: +49-711-4560-021 Fax +49-711-4560-729 E-mail info@hirose.de
Hirose Electric UK, Ltd Crownhill Business Centre 22 Vincent Avenue, Crownhill Milton Keynes, MK8 OAB Great Britain Phone:+44-1908-305400 Fax: +44-1908-305401	Hirose Electric Co., Ltd. 5-23, Osaki 5 Chome, Shinagawa-Ku Tokyo 141 Japan Phone: +81-03-3491-9741 Fax: +81-03-3493-2933	Hirose Electric Co., Ltd. European Branch First class Building 4F Beechavenue 46 1119PV Schiphol-Rijk Netherlands Phone: +31-20-6557-460 Fax: +31-20-6557-469