HUAWEI

1. Hardware Installation

2. Software Installation & System Commissioning

iSiteC BTS3601C CDMA Base Station

Installation Manual

V100R001

iSiteC BTS3601C CDMA Base Station

Installation Manual

Manual Version	T1-030499-20030430-C-1.10
Product Version	V100R001
BOM	31040899

Huawei Technologies Co., Ltd. provides customers with comprehensive technical support and service. Please feel free to contact our local office, customer care center or company headquarters.

Huawei Technologies Co., Ltd.

Address: Administration Building, Huawei Technologies Co., Ltd.,

Bantian, Longgang District, Shenzhen, P. R. China

Postal Code: 518129

Website: http://www.huawei.com

Email: support@huawei.com

Copyright © 2003 Huawei Technologies Co., Ltd.

All Rights Reserved

No part of this manual may be reproduced or transmitted in any form or by any means without prior written consent of Huawei Technologies Co., Ltd.

Trademarks

, HUAWEI, C&C08, EAST8000, HONET, , ViewPoint, INtess, ETS, DMC, TELLIN, InfoLink, Netkey, Quidway, SYNLOCK, Radium, M900/M1800, TELESIGHT, Quidview, Musa, Airbridge, Tellwin, Inmedia, VRP, DOPRA, iTELLIN, HUAWEI OptiX, C&C08 iNET, NETENGINE, OptiX, SoftX, iSite, U-SYS, iMUSE, OpenEye, Lansway, SmartAX are trademarks of Huawei Technologies Co., Ltd.

All other trademarks mentioned in this manual are the property of their respective holders.

Notice

The information in this manual is subject to change without notice. Every effort has been made in the preparation of this manual to ensure accuracy of the contents, but all statements, information, and recommendations in this manual do not constitute the warranty of any kind, express or implied.

About This Manual

Version

The product version corresponds to the manual is iSiteC BTS3601C CDMA Base Station V100R001.

Contents

The manual introduces the insulation methods and procedure of BTS3601C. It is divided into two modules:

- Module 1: **Hardware Installation**

This module describes in detail the installation procedure of the hardware system, including preparations, equipment room, antenna & feeder, and the inspection after installation.

- Module 2: **Software Installation & System Commissioning**

This part introduces the installation procedure of BTS maintenance terminal software and the BTS system software, as well as the testing and commissioning of the system.

Target Readers

The manual is intended for the following readers:

- Installation engineers & technicians
- Operation & maintenance personnel

Conventions

This manual uses the following conventions:

I. General conventions

Convention	Description
Arial	Normal paragraphs are in Arial.
Arial Narrow	Warnings, Cautions, Notes and Tips are in Arial Narrow.
Boldface	Headings are in **Boldface**.
`Courier New`	Terminal Display is in `Courier New`.

II. Command conventions

Convention	Description
Boldface	The keywords of a command line are in **Boldface**.
italic	Command arguments are in *italic*.
[ ]	Items (keywords or arguments) in square brackets [ ] are optional.
{ x | y | ... }	Alternative items are grouped in braces and separated by vertical bars. One is selected.
[x | y | ...]	Optional alternative items are grouped in square brackets and separated by vertical bars. One or none is selected.
{ x | y | ... } *	Alternative items are grouped in braces and separated by vertical bars. A minimum of one or a maximum of all can be selected.
[x | y | ...] *	Optional alternative items are grouped in square brackets and separated by vertical bars. Many or none can be selected.

III. GUI conventions

Convention	Description
< >	Button names are inside angle brackets. For example, click <OK> button.
[ ]	Window names, menu items, data table and field names are inside square brackets. For example, pop up the [New User] window.
/	Multi-level menus are separated by forward slashes. For example, [File/Create/Folder].

IV. Keyboard operation

Format	Description
<Key>	Press the key with the key name inside angle brackets. For example, <Enter>, <Tab>, <Backspace>, or <A>.
<Key1+Key2>	Press the keys concurrently. For example, <Ctrl+Alt+A> means the three keys should be pressed concurrently.
<Key1, Key2>	Press the keys in turn. For example, <Alt, A> means the two keys should be pressed in turn.

V. Mouse operation

Action	Description
Click	Press the left button or right button quickly (left button by default).

Action	Description
Double Click	Press the left button twice continuously and quickly.
Drag	Press and hold the left button and drag it to a certain position.

VI. Symbols

Eye-catching symbols are also used in the manual to highlight the points worthy of special attention during the operation. They are defined as follows:

⚠ **Caution**, **Warning**, **Danger**: Means reader be extremely careful during the operation.

🕮 **Note**, **Comment**, **Tip**, **Knowhow**, **Thought**: Means a complementary description.

Environmental Protection

This product has been designed to comply with the requirements on environmental protection. For the proper storage, use and disposal of this product, national laws and regulations must be observed.

Table of Contents

Safety Precautions S-1
1 Overview..... S-1
1.1 Symbol Explanation S-2
2 Toxic Articles..... S-3
2.1 Beryllium Oxide S-3
2.2 Hydrochloride S-4
2.3 Hydrofluoride..... S-4
3 Electrical Safety..... S-5
3.1 High Voltage..... S-5
3.2 Power Cables S-5
3.3 Tools S-6
3.4 Drilling S-6
3.5 Thunderstorms S-6
3.6 Static Electricity S-7
3.7 Power Labels S-8
3.8 Leakage Current..... S-9
3.9 Flammable Air Environment..... S-9
4 Batteries S-9
4.1 General Operations..... S-9
4.2 Short Circuit..... S-10
4.3 Harmful Gases S-10
4.4 High Temperature..... S-11
4.5 Acid Liquid..... S-11
4.6 Battery Replacement..... S-12
5 Microwave and Magnetic Field S-12
5.1 Introduction S-12
5.2 Definition of the Environment..... S-12
5.3 Operation Codes S-13
6 Laser S-13
7 High Temperature..... S-13
8 Fans S-14
9 Working at High Altitudes S-14
9.1 General Operations..... S-14
9.2 Safety Codes for Using Ladders S-15
10 Other Items S-17
10.1 Hoisting of Heavy Objects S-17
10.2 Handling of Heavy Objects S-18

10.3 Sharp Edges..... S-19
10.4 Inserting & Drawing Out the Boards S-20
10.5 Bundling the Signal Cables..... S-20
10.6 Maintenance and Commissioning by a Single Person is not Allowed S-20

Safety Precautions

1 Overview

This section covers part of the safety precautions to be observed during the installation, maintenance, and the related operation of Huawei-developed network equipment.

Caution:

Before any operation, please carefully go through the operation instructions and precautions so as to prevent accidents. The signs such as "Caution, Attention, Warning and Danger" in manuals are merely the supplements to safety precautions in operations rather than all the safety precautions to be observed. Therefore, personnel engaged in the installation and maintenance of Huawei-developed products should have basic knowledge of safe operation, undergo relevant training and be qualified for related operations.

Please abide by local safety regulations during the operation. The safety precautions in this manual only serve as supplements to local safety regulations.

When operating Huawei-developed products and equipment, please strictly abide by the precaution points and specific safety instructions concerning the equipment provided by Huawei. The safety warnings listed in this manual only show the precaution points that Huawei are aware of. Huawei Company does not bear any consequence resulting from violation against universal regulations for safety operation, or violation against the safety codes in designing, production and equipment using.

The personnel responsible for the installation and maintenance of Huawei-developed products should undergo strict training, command the correct operation methods and get acquainted with various safety precautions before performing any operation such as equipment installation, maintenance, etc.

1.1 Symbol Explanation

The signs shown in Table 1 in this manual, are intended to remind readers of the safety precautions to be observed during the operations of equipment installation and maintenance.

Safety prompts are divided into the following levels: Danger, Warning, Attention and Caution. The format is shown in the following: The text note of the safety level is indicated to the right of the symbol. And the detailed explanations of the safety precautions are shown below the symbol.

Danger:

Indicating that casualties or serious accident may occur if this safety instruction is ignored.

Warning:

Indicating that serious or major injuries may occur or equipment may be damaged if this safety instruction is ignored.

Attention:

Indicating that major injuries may occur or equipment may be damaged if this safety instruction is ignored.

Caution:

Indicating that injuries may occur or equipment may be damaged if this safety instruction is ignored.

The types and meanings of safety signs are shown in the following table.

Table 1 Types and meanings of safety signs

Safety symbol	Meaning
	Common warning symbol: Indicates general safety precautions.
	Anti-static symbol: Indicates that the equipment is sensitive to static electricity.
	Live-line symbol: Indicates dangerous voltage.
	Microwave symbol: Indicates powerful electromagnetic field.
	Laser symbol: Indicates powerful laser beam.
	Scald symbol: Indicates that the equipment surface with high temperature, which might cause scald or burns on the personnel. Upon this warning, people should not touch the surface, so as to avoid any scald or burn.

2 Toxic Articles

2.1 Beryllium Oxide

Warning:

Some equipment components carrying toxic beryllium oxide are chosen unavoidably.

- Only when the components carrying beryllium oxide are damaged may the beryllium oxide do harm to human body. The personnel who contact or handle the components should be aware of the component peculiarity and take corresponding preventive measures beforehand.
- To dispose of the component, the personnel should make necessary chemical treatment or special waste processing for the component carrying beryllium in accordance with related local regulations. The components carrying beryllium should not be discarded freely.

2.2 Hydrochloride

Warning:

Some components of the equipment carrying hydrochloride are used as it is unavoidable. Toxic gases will be generated by these components when burned.

- Toxic gases will be generated when burning these components. Preventive measures should be taken beforehand so that the components will not get burned, and even if the burning occurs, the toxic gases will not be inhaled into human body. The components should not be discarded freely. To dispose of the component, the personnel should make necessary chemical treatment or special waste processing for the component carrying hydrochloride in accordance with related local regulations.

2.3 Hydrofluoride

Warning:

Some equipment components carrying hydrofluoride are chosen unavoidably. Toxic gases will be generated when burning these components.

- Preventive measures should be taken beforehand so that the components will not get burned, and even if the burning occurs, the toxic gases will not be inhaled into human body. The components should not be discarded freely. To dispose of the component, the personnel should make necessary chemical treatment or special waste processing for the component carrying hydrofluoride in accordance with related local regulations.

3 Electrical Safety

3.1 High Voltage

Danger:

High voltage power supply provides electricity for equipment operation. Direct contact or indirect contact via damp objects and conductors with high-voltage wires or mains supply may be fatal.

- Installation of AC power supply equipment must be implemented in compliance with local safety regulations, and the personnel engaged in AC power supply must be qualified for high-voltage and AC operations.
- Electrical conductors such as watches, bracelets and rings must be removed before operation.
- If the cabinet is found to be wet, please turn off power supply immediately.
- Keep the equipment dry upon operation under humid environment.

Warning:

Improper high-voltage operations may result in fire accidents and electric shocks. Therefore, AC power cables must be laid in compliance with local codes and regulations. High-voltage operators should be trained and qualified.

3.2 Power Cables

Caution:

Live installation and removal of power cables are prohibited. Electric sparks or arcs may be generated when power cables get in touch with conductors, which may cause fire accidents or eye injuries.

- Power must be switched off before installation and removal of the power cable.
- Before connecting a cable, make sure that the cable and cable label to be used should match actual installation requirements.

3.3 Tools

Warning:

High-voltage and AC operations require special tools instead of general-purpose or makeshift tools.

3.4 Drilling

Warning:

Unauthorized drilling on the cabinet is strictly prohibited. Improper drilling may damage the connections and cables inside the cabinet and the metal filings produced during the drilling may cause short-circuits of the circuit boards if they fall into the cabinet.

- Wear protective insulation gloves and remove the cables inside the cabinet before drilling holes on the cabinet.
- Take care of your eyes when drilling holes. As the splashing metal burrs &scraps may hurt your eyes.
- Prevent metal scraps from entering the cabinet inside.
- Improper drilling will damage the electromagnetic shielding performance of the cabinet.
- Clean up the metal scraps after drilling.

3.5 Thunderstorms

Danger:

High-voltage and AC operations and operations on the steel towers and masts are strictly prohibited in a stormy weather.

- Thunderstorms can generate powerful electromagnetic field in the atmosphere. Therefore, equipment should be grounded properly in order to prevent the equipment from being thunderstruck.

3.6 Static Electricity

Caution:

Static electricity generated by the human body may damage the electrostatic-sensitive parts on the circuit boards, such as large-scale integrated circuit (IC).

- The grating generated between human activities and the components is the rootage for electrostatic charge accumulation. In dry climate, the electrostatic charge carried by human body may go up to 30 kV, which will remain on the human body for a rather long period of time. The operator's contact with the sensitive component and the resultant electric discharge will cause damage to the component.
- Before contacting/touching any equipment such as holding plug-in boards, circuit boards and IC chips, put on the anti-static wrist strap with one end well grounded so as to prevent sensitive parts from getting damaged by static electricity on the human body.
- Before operators touch the board or module, they should release the electrostatic charge in their body. That is, before the operator touches a board or a module, he or she must wear the anti-static grounded wrist strap. The connecting line between the wrist and the grounding point should connect in series with a resistance greater than 1 M¦¸ to protect people from being accidentally shocked. The resistance value greater than 1 M, is rather low in terms of electrostatic voltage discharging. The anti-static wrist strap should be checked regularly. Using other cable to replace the cable of anti-static wrist strap is strictly prohibited.
- Electrostatic-sensitive board or module should not be in contact with the object with static electricity or the object that may easily generate static electricity. For instance, packaging bags, delivery boxes and conveyor belts made of insulating materials will generate static electricity by themselves, and can cause electrostatic charging when in contact with human body or the earth and might thus bring forth damages.
- Electrostatic-sensitive boards or modules can only contact quality discharging materials, such as anti-static packing bags. The board in stock or in the course of transportation should be packaged with anti-static packing bag.
- Before the measurement device is connected to boards or modules, first discharge its static electricity, that is, the measurement device should be grounded first.

- The single board or module should not be placed near strong DC magnetic field, for instance, near the cathode ray tube of the oscilloscope. The safety distance should be at least 10 cm.
- Damage caused by static electricity is accumulative. If the damage is slight, the component will not malfunction. However, as the number of damages increase, the components may suddenly fail. The electrostatic discharging damage to the component is of two types: obvious damage and hidden damage. Hidden damage is not shown when the damage occurs, whereas the component may become vulnerable and easily get damaged under the condition of over-voltage and of high-temperature.

The correct way of wearing anti-static wrist strap is shown in Figure 1.

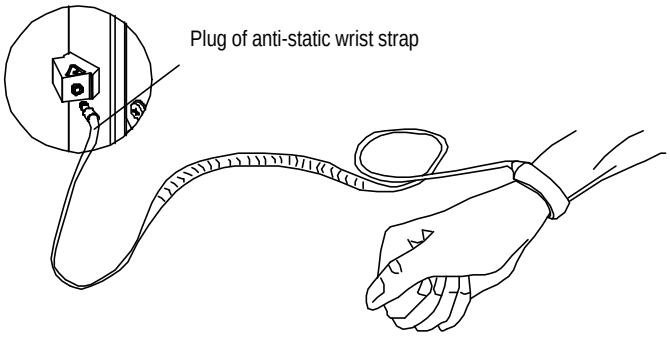

Figure 1 Wearing the anti-static wrist strap

3.7 Power Labels

Caution:

Before connecting the cables, check the correctness of labels and then make the connection.

3.8 Leakage Current

Warning:

To avoid the occurrence of large leakage current, the equipment must be grounded before connecting to the power supply.

- Before connecting the AC input power supply, the operation and maintenance personnel should first connect the protection-grounding terminal of the equipment housing to the earth. The purpose of doing so is to avoid electric shock on human body resulting from leakage current, which is usually caused by the earth capacitance of the EMI wave filter at the AC power supply input terminal of the equipment or the Y capacitance of the primary power supply.

3.9 Flammable Air Environment

Danger:

The equipment should not be placed in an environment where flammable, explosive air or smog exists. No operation should be performed under such an environment.

- The operation on any electronic equipment under such an environment will pose absolute threat to the equipment & the operating personnel.

4 Batteries

4.1 General Operations

Danger:

Before undertaking the battery operations, the personnel should carefully read the safety precautions for handling batteries and the correct connection of batteries.

- Improper operation of batteries will be dangerous. Guard against short-circuits of batteries or electrolyte spillover in operation, which may pose a potential threat to equipment, corrode metal articles and circuit boards, damage equipment and result in short circuit of circuit board.
- Before installation and maintenance of batteries, take the following measures to ensure safety:
- The batteries should be handled with care. Avoid strenuous vibration when handling them.
- Metal articles such as watches, bracelets and rings must be removed.
- Use special insulated tools.
- Wear eye protection gears and take preventive measures.
- Wear rubber gloves and apron in case of electrolyte spillover.
- Hold the positive pole of batteries upright during handling. Do not handle them upside down or in slant position.

4.2 Short Circuit

Caution:

Short-circuit of the battery will cause personal injury. Although the voltage of ordinary battery is not high, the powerful instantaneous current generated by short-circuit may release immense energy.

- Prevent short-circuits of batteries caused by metal articles, such as short-circuit caused by improper use of tools. If allowed, first disconnect the batteries and then proceed with other operations.

4.3 Harmful Gases

Caution:

Unsealed lead acid batteries should not be used, as the gas released from the batteries may cause fires or equipment corrosion. Batteries should be fixed horizontally.

- Batteries may release inflammable gases in operation, so the place where the batteries are placed should be well ventilated and fire prevention measures should be taken.

4.4 High Temperature

Caution:

Excessively high temperature of batteries will cause deformation and damage to batteries and spillover of acid liquid.

- When the temperature of battery is over 60^0C, check and see whether there is spillover of acid liquid.
- In case of acid liquid spillover, please make proper and timely treatment of acid spillover.

4.5 Acid Liquid

Caution:

In case of acid liquid spillover, make sure that the spillovers are absorbed and neutralized.

- To move leaking batteries, bear in mind the possible damages that may be caused by the acid liquid. Once acid liquid is found to have spilt over, absorb and neutralize it with the following materials.

  Bicarbonate: $NaHCO_3$

  Barilla: Na_2CO_3

  Soda: $Na_2CO_3 \cdot 10H_2O$
- Consult the battery manufacturers as regards materials used to absorb and neutralize acid liquid.

4.6 Battery Replacement

Warning:

Operation and maintenance personnel should not replace the batteries of specified model with that of other model. Otherwise, possible explosion may incur.

5 Microwave and Magnetic Field

5.1 Introduction

The equipment antenna in service will generate electromagnetic radiation. Standing too close to the antenna violates the safety codes. The equipment can only be installed and maintained by trained professional personnel. The radiation design of the equipment should meet the IEEE C95.1-1991 recommendation. When working near the full-power transmitting antenna, one should first read the following safety working requirements.

5.2 Definition of the Environment

The uppermost level limit of the environment that can be exposed to radio magnetic radiation is of two kinds: one is "controlled environment" and the other is "uncontrolled environment " with less radiation.

- Controlled Environment

Controlled environment refers to a certain location where the personnel who enter the area are aware of the potential threat of exposing themselves to the radio frequency radiation environment. Generally, the personnel enter such areas for the profession requirements and they get acquainted with this danger or they just pass by the areas where possible radiation exists. The magnetic field level of the area is higher than that of "uncontrolled environment" but no greater than that of "controlled environment" listed in the table.

- Uncontrolled Environment

"Uncontrolled environment" refers to a certain location where the personnel who enter the area are not aware of the potential threat of exposing themselves to the radio frequency radiation environment, and they cannot control the environment where they are situated. This location may include living environment or working environment.

The magnetic field level of the location cannot be greater than the uppermost level under the "uncontrolled environment" listed in the table.

5.3 Operation Codes

Warning:

When operating on the high intensity radio frequency signal equipment, bear in mind that the high-intensity microwave is detrimental to human health.

6 Laser

Warning:

Laser beams inside optical fibers may do harm to your eyes.

- During the installation and maintenance of optical fibers, keep eyes away from, or avoid direct look at the optical fiber or optical transceiver outlet.

7 High Temperature

Warning:

It is unavoidable that the temperatures of some equipment parts are rather high. Please do not touch the surface as you wish, else scalding may occur.

- When the equipment is running in the tropical environment, the temperature benchmark of the parts is 45^0C and the maximum range of temperature rise allowed is 30^0C under normal working conditions. When fault occurs, the maximum temperature rise allowed is 55^0C. So when the parts work at the high

temperature of 45^0C under normal working conditions, their highest temperature should not exceed 75^0C, and when fault occurs, the highest temperature should not exceed 100^0C.

8 Fans

Warning:

To dismount the fan which is running, never dip the finger or tool into the fan that is running before the fan is powered off or stops running to avoid damage to the equipment or injuries to human body.

- Dipping the finger into the fan while it is running may cause injuries.
- When replacing related parts, place the objects such as the parts, screws, and tools properly. Make sure that they would not fall into the running fan, otherwise they will damage the fan or the related equipment.
- When replacing the peripheral equipment of the fan, never dip the finger or board into the fan to avoid any possible injuries to the equipment or the hands.

Warning:

Keep your hands and body away from the dangerous running parts to avoid possible injuries.

9 Working at High Altitudes

9.1 General Operations

Warning:

When working at heights, beware of falling objects.

Working at heights must be in accordance with the related national regulations:

- Personnel working at heights must have undergone appropriate training.

- Take care of the mechanical devices and tools and prevent them from falling down.
- Follow safety precautions and wear helmet and safety belt.
- Put on cold-proof clothes before working at heights in cold areas.
- Check and approve all the lifting devices before working at heights.

9.2 Safety Codes for Using Ladders

- Before using the ladder, first check and see whether the ladder is damaged. Make sure the ladder is safe for use. Overload on the ladder is strictly prohibited.
- When operating under the conditions that the leaning distance of the ladder is over 5measurement, and that of the erected ladder with two-foot is over 3meters, and other dangerous environment, the ladder should be held by somebody or relevant safe measures should be effected. The A-shaped ladder should be completely stretched for using, as shown in Figure 2 below.

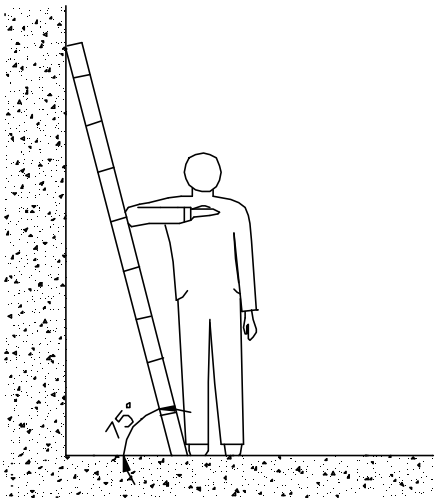

Figure 2 The angle at which the ladder should be leaned

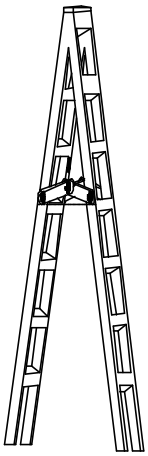

Figure 3 Stretching the A-shaped ladder

- It is recommended that the slope of the ladder be 75^0. The slope can be measured with angle square or with arm, as shown in the Figure 3. When using the ladder, the wider end of the ladder should be placed against the ground or protective measures should be taken at the bottom of the ladder for the purpose of skid resistance. Place the ladder against a stable ground and do not place the ladder against those objects that are easy to lean and slide themselves such as paper box, stone and so on.

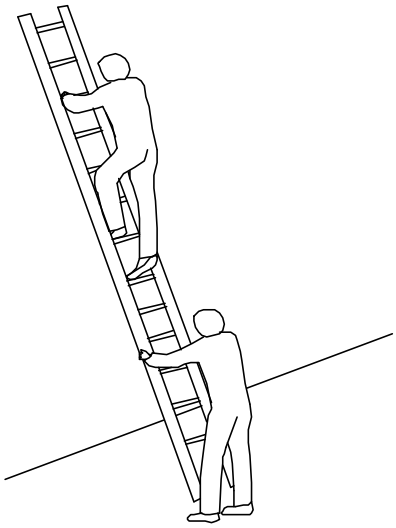

Figure 4 Climbing and using the long ladder in a safe way

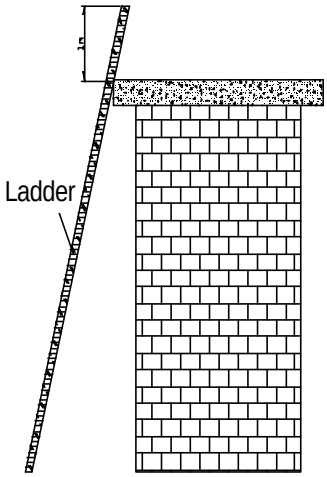

Figure 5 Placing the ladder with the top 1 meter higher above the edge of the roof-top

- When climbing the ladder, one' s center of gravity should not deviate from the ladder edge. To avoid danger and ensure safety, make sure that three parts of the body should be kept on the ladder, that is, the feet should be pressed against the ladder and one hand fast grips the ladder, as shown in Figure 4. Never climb the topmost four rungs of a ladder. If one is about to climb to the roof, the length of the ladder should be at least 1 meter higher above the eave, as shown in Figure 5.

10 Other Items

10.1 Hoisting of Heavy Objects

Warning:

Walking under the gib arm or hoisted objects are strictly prohibited when hoisting heavy objects.

- Lifting operators should undergo related training and be qualified. The lifting devices should be checked and must be intact. Make sure that only when the lifting devices are firmly fixed onto the weight-bearing object or onto the main wall may lifting operations be undertaken. Use concise command to avoid wrong operations.

- The angle between the straps at the point where they are attached to the lifting hook should not be greater than 90^0 to prevent them from getting broken, as shown in Figure 6.

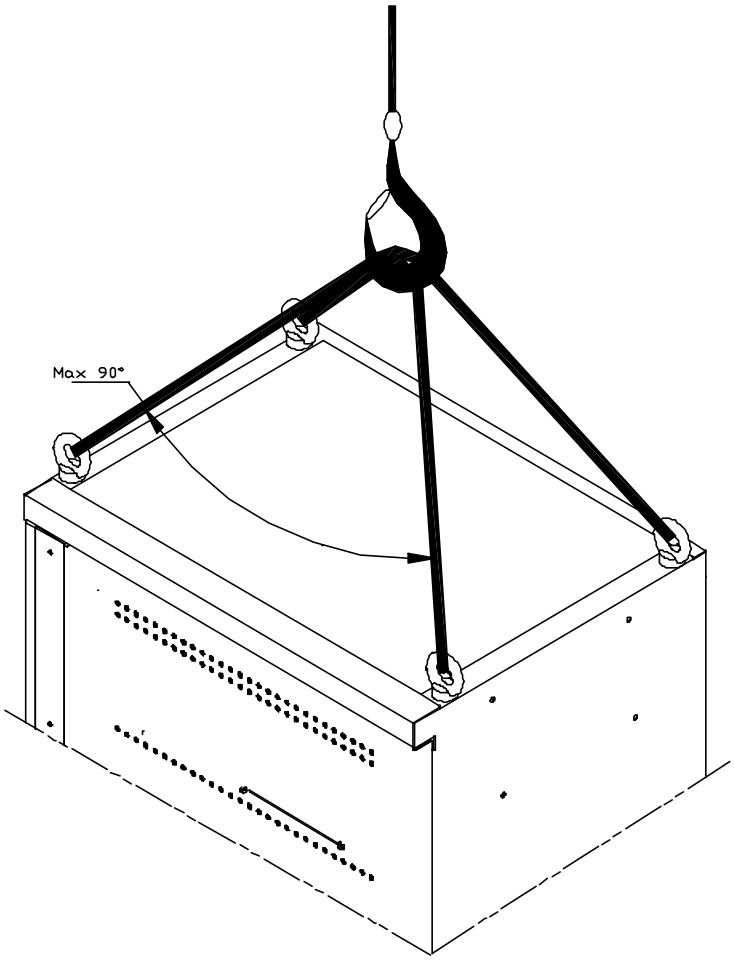

Figure 6 Hoisting of the heavy objects

10.2 Handling of Heavy Objects

Caution:

When carrying heavy object such as the cabinets, please get everything well prepared for bearing to avoid bruises and wounds by the heavy object.

- The installation and maintenance of BSC cabinet should be done by 2 to 3 persons at best. The operations of leaning, tilting, and erecting the cabinet should also be undertaken with the cooperation of 2 to 3 persons. Note that the cabinet may fall down on account of the center of gravity when the tilt angle of the center of gravity exceeds 10 degrees.

The process of laying down and erecting a cabinet is shown as Figure 7.

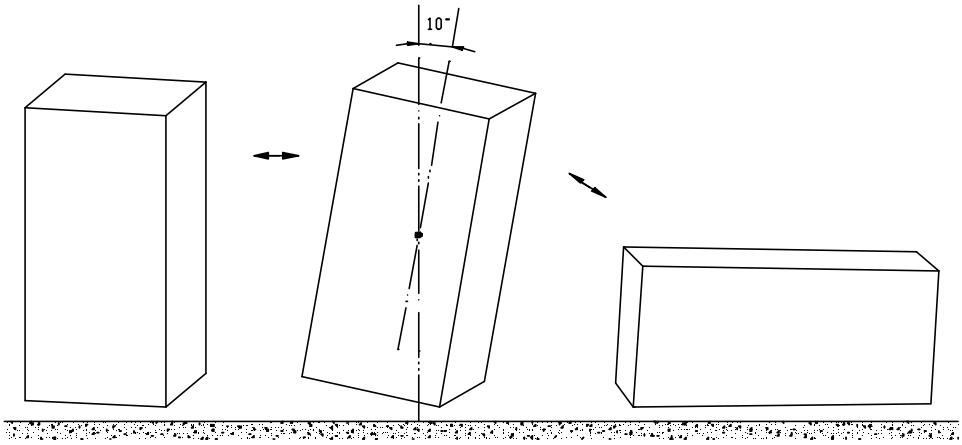

Figure 7 The process of laying down and erecting a cabinet

10.3 Sharp Edges

Warning:

When conveying equipment by hand, please wear protective gloves to prevent cuts and injuries caused by sharp edges.

10.4 Inserting & Drawing Out the Boards

Caution:

Do not apply too much force when inserting the boards to avoid bending of the pins on the backplane.

Insert the board along the slot to avoid short-circuit resulting from their surfaces contacting each other.

Keep hands off the board circuit, elements, connectors or wiring trough when holding a board by hand.

10.5 Bundling the Signal Cables

Caution:

Signal cables should be tied separately from strong current or high voltage cables, and the spacing between adjacent cable ties should be at least 150mm.

10.6 Maintenance and Commissioning by a Single Person is not Allowed

Caution:

One should not attempt to perform the maintenance or commissioning in the areas of the equipment interior unless another qualified professional who can give instructions and is capable of self-saving is present.

Table of Contents

1 Installation Preparations.....1-1
1.1 Personnel Requirements.....1-1
1.1.1 Basic Requirements.....1-1
1.1.2 Requirements for Antenna & Feeder Installation Personnel.....1-1
1.2 Technical Documents Preparation.....1-2
1.3 Installation Tools & Instruments Preparation.....1-3
1.4 Installation Environment Check.....1-6
1.5 Project Plan and Kickoff Coordination.....1-6
1.5.1 Project Plan.....1-6
1.5.2 Kickoff Coordination.....1-7
1.6 Unpacking Check.....1-7
1.6.1 *Packing List* Collation.....1-7
1.6.2 Unpacking Inspection on Wooden Cases.....1-8
1.6.3 Unpacking Inspection on Cartons.....1-9
1.6.4 Acceptance and Handover.....1-11
2 Installing Cabinet Hardware.....2-1
2.1 Hardware Components.....2-1
2.1.1 Component Structure.....2-1
2.1.2 Introduction of Hardware Major Equipment.....2-2
2.1.3 Introduction of Hardware Auxiliary Equipment.....2-2
2.1.4 Installation Mode.....2-3
2.1.5 Installation Flow.....2-3
2.2 Installation Planning.....2-5
2.2.1 Example of Indoor Wall Installation.....2-5
2.2.2 Example of Indoor Plinth Installation.....2-6
2.2.3 Example of Concrete Pole Installation.....2-6
2.2.4 Example of Metal Mast Installation on Building-top.....2-9
2.2.5 Example of Tower Installation.....2-11
2.3 Installing Major Equipment.....2-13
2.3.1 Installation Flow.....2-13
2.3.2 Installing BTS3601C on the Wall.....2-14
2.3.3 Installing BTS3601C on Plinth.....2-18
2.3.4 Installing BTS3601C on Metal Mast and Concrete Pole.....2-21
2.3.5 Installing Modules.....2-23
2.3.6 Installing Cables.....2-25
2.3.7 Installing Shell.....2-31
2.3.8 Installing Sun-shading Cover.....2-32

2.4 Installing Auxiliary Equipment 2-32
2.4.1 Installing IAFB 2-33
2.4.2 Installing AC Lightning Protection Box 2-34
2.4.3 Installing UPS 2-40
2.4.4 Installing IABB 2-40
2.5 Installing Cables 2-48
2.5.1 Cable Connection Requirements 2-49
2.5.2 Networking of AC Lightning Protection Box 2-53
2.5.3 Networking of IAFB 2-56
2.5.4 Networking of Inverter 2-66

3 Installing RF Antenna and Feeder System 3-1
3.1 Installation Flow 3-1
3.2 Installing Antenna Accessories 3-3
3.2.1 Installing Omni Antenna Accessories 3-3
3.2.2 Installing Directional Antenna Accessories 3-4
3.3 Installing Grounding Bar 3-6
3.4 Installing Antenna Support 3-8
3.4.1 Installing Support on Tower Platform 3-8
3.4.2 Installing Support on Building-top 3-10
3.5 Installing Antenna 3-16
3.5.1 Antenna Facade 3-16
3.5.2 Hoisting Antenna 3-16
3.5.3 Installing Omni Antenna 3-16
3.5.4 Installing Directional Antenna 3-19
3.6 Installing Feeder Window 3-23
3.6.1 About Feeder Window 3-23
3.6.2 Installing Feeder Window 3-24
3.7 Installing Feeders 3-25
3.7.1 Cutting Feeder 3-25
3.7.2 Hoisting Feeder 3-26
3.7.3 Routing Feeder 3-27
3.7.4 Affixing Feeder Labels 3-28
3.7.5 Grounding Feeders 3-28
3.7.6 Leading Feeder into Equipment Room 3-30
3.7.7 Connecting Feeder and BTS 3-31
3.8 System Testing 3-32

4 Installing Satellite Synchronization Antenna and Feeder System 4-1
4.1 Installing GPS Antenna and Feeder System 4-1
4.2 Installing GPS Antenna 4-2
4.2.1 Requirements for Installation Position 4-2
4.2.2 Installing GPS Antenna Support 4-3
4.2.3 Installing Antenna 4-7

4.3 Installing GPS Feeder 4-8
4.3.1 Routing Feeder 4-8
4.3.2 Installing Lightning Arrester 4-9
4.3.3 Grounding Requirement 4-11
4.3.4 Feeder Label 4-13

5 Installation Check 5-1
5.1 Overall Check 5-1
5.1.1 Checking Equipment Installation 5-1
5.1.2 Checking Cable Connection 5-1
5.1.3 Checking Lightning Protection Grounding 5-1
5.2 Power-on Check 5-3
5.3 Checking Environment Condition 5-3
5.4 System Commissioning 5-3

A Installing IAFB A-1
A.1 Installation Flow A-1
A.2 Wall Installation A-1
A.3 Metal Mast Installation A-4
A.4 Pole Installation A-5
A.5 Installation Check A-6

B Requirements for Antenna Isolation B-1

C Making Connectors C-1
C.1 Overview C-1
C.2 Making 7/16 DIN Connector and N Connector for Jumper C-1
C.3 Making 7/16 DIN Connector and N Connector for 7/8 Feeder C-5

D Preparing Grounding Clips D-1
D.1 Overview D-1
D.2 Preparation Process D-1

Table of Contents

3 Installing RF Antenna and Feeder System.....3-1
3.1 Installation Flow.....3-1
3.2 Installing Antenna Accessories 3-3
3.2.1 Installing Omni Antenna Accessories.....3-3
3.2.2 Installing Directional Antenna Accessories.....3-4
3.3 Installing Grounding Bar 3-6
3.4 Installing Antenna Support.....3-8
3.4.1 Installing Support on Tower Platform.....3-8
3.4.2 Installing Support on Building-top 3-10
3.5 Installing Antenna 3-16
3.5.1 Antenna Facade 3-16
3.5.2 Hoisting Antenna 3-16
3.5.3 Installing Omni Antenna 3-16
3.5.4 Installing Directional Antenna.....3-19
3.6 Installing Feeder Window 3-23
3.6.1 About Feeder Window.....3-23
3.6.2 Installing Feeder Window 3-24
3.7 Installing Feeders 3-25
3.7.1 Cutting Feeder 3-25
3.7.2 Hoisting Feeder 3-26
3.7.3 Routing Feeder 3-27
3.7.4 Affixing Feeder Labels.....3-28
3.7.5 Grounding Feeders 3-28
3.7.6 Leading Feeder into Equipment Room.....3-30
3.7.7 Connecting Feeder and BTS.....3-31
3.8 System Testing.....3-32

3 Installing RF Antenna and Feeder System

The RF antenna and feeder system of BTS consists of antenna, feeder, jumper and feeder grounding clip, etc.

3.1 Installation Flow

According to different installations of the BTS major equipment, the installation of the antenna and feeder system differs. The installation flow of the antenna and feeder system is shown in Figure 3-1.

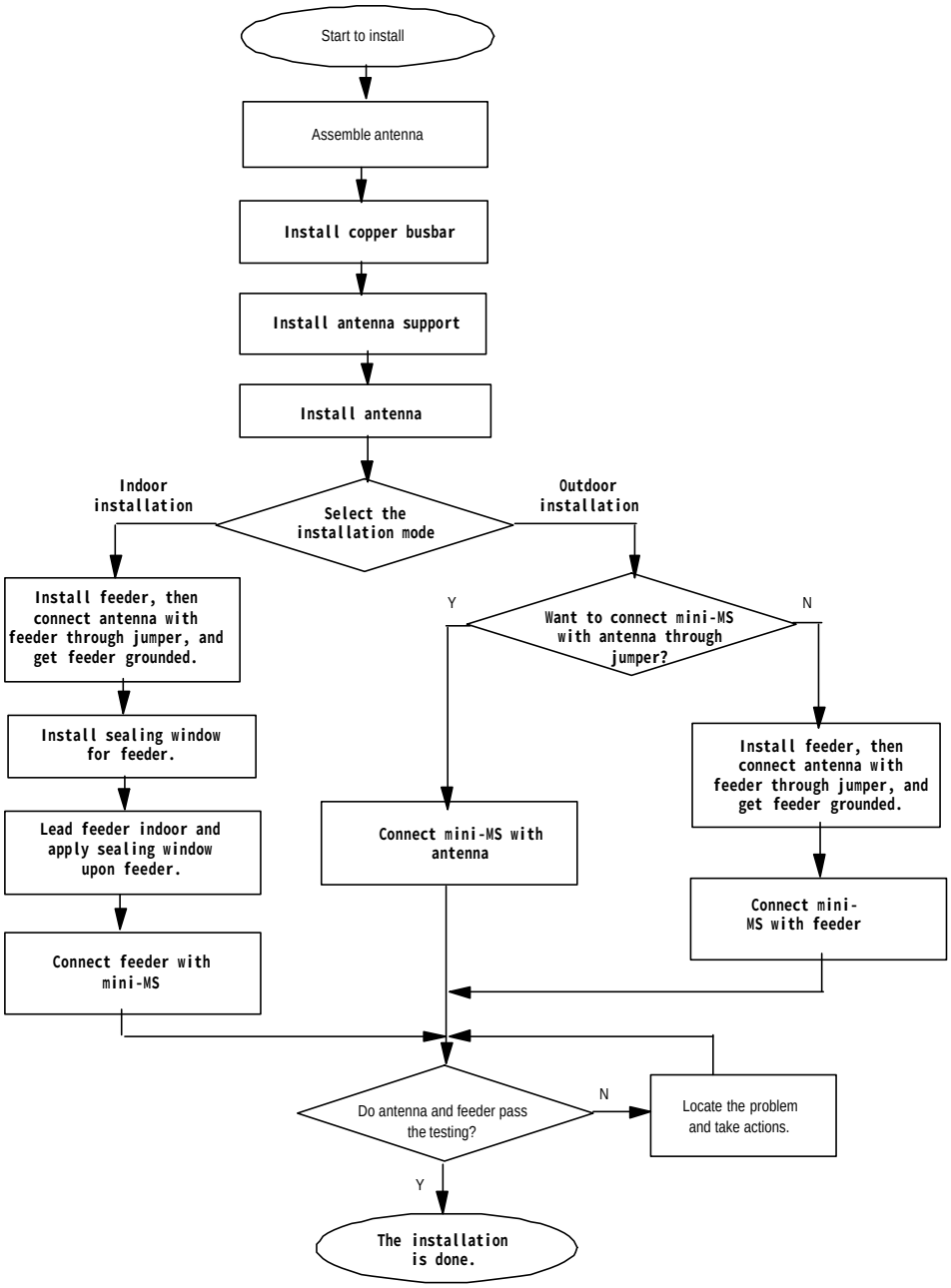

Figure 3-1 Installation flow of antenna and feeder system

📖 **Note:**

The installation of antenna and feeder system is exemplified by the indoor installation of BTS. For the antenna and feeder installation in case of BTS outdoor installation, please refer to the installation of the antenna and feeder system of BTS indoor installation.

3.2 Installing Antenna Accessories

3.2.1 Installing Omni Antenna Accessories

Accessories used to assemble the omni antenna are antenna fixing clip and jumper. The omni antenna fixing clip is shown in Figure 3-2 and Figure 3-3.

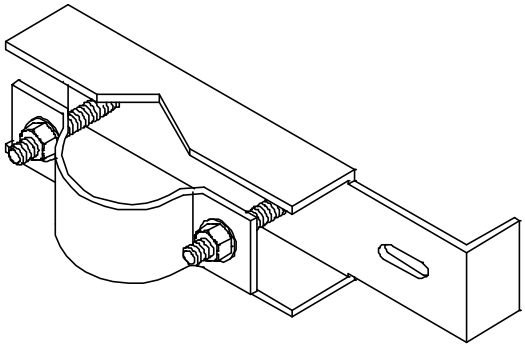

Figure 3-2 Omni antenna fixing clip (1)

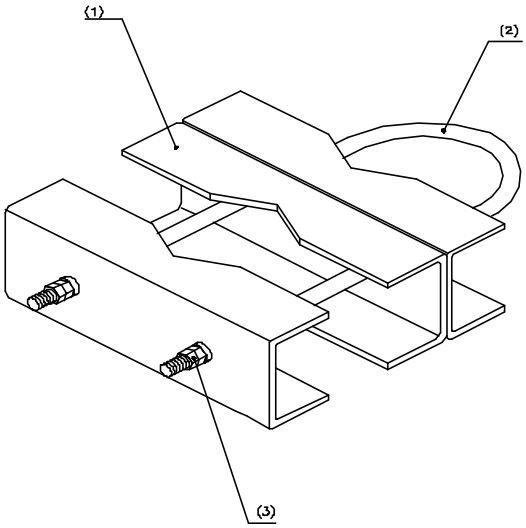

(1) Omni antenna joint (2) M12×580 U-bolts (3) Nut M12

Figure 3-3 Omni antenna fixing clip (2)

Note:

There are various types of fixing clips for the omni antenna, including the two shown in Figure 3-2 and Figure 3-3 for reference. In practical installation, the fixing clips should be applied according to the actual situations. The following takes the antenna fixing clip as shown in Figure 3-2 as an example.

The installation procedure of accessories is as follows:

1) Assemble the two fixing clips of the omni antenna with the part contacting the antenna fastened so as to reduce the work on the tower or the building-top, as shown in Figure 3-4.

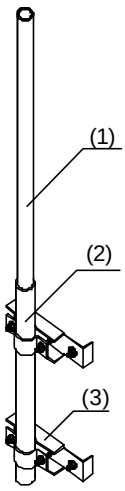

(1)Omni antenna (2) Antenna jacket (3) Omni antenna fixing clip

Figure 3-4 Fixing omni antenna

2) Connect the jumper connector to the antenna connector and fasten it.
3) Perform waterproof and sealing treatment to the joint between the antenna and the jumper. Please refer to Section 2.3.6 for the waterproof treatment.

Note:

Steps 2) and 3) can be completed on the tower or the building-top.

3.2.2 Installing Directional Antenna Accessories

Accessories used to assemble the directional antenna are antenna fixing clip (as shown in Figure 3-5), tilt angle adjustment device (as shown in Figure 3-6), and jumper.

Figure 3-5 Directional antenna fixing clip

Figure 3-6 Directional antenna tilt angle adjustment device

The installation procedure of accessories is as follows:

1) First, determine the two fixed adjusting points on the top and bottom of the antenna according to the label on the back of the antenna. The point on the top of the antenna is for adjusting the pitch angle, and the point on the bottom for fixing the antenna and its support.
2) Mount each accessory to its position according to the assembly diagram provided by the vendor. All the accessories must be furnished with spring washers and plain washers.
3) Jumper connection: Take off the jacket at the lower part of the antenna. Then connect the jumper connector and the antenna connector and fasten them.
4) Perform waterproof treatment to the connector (the same method as that to the connector between omni antenna and jumper).

Figure 3-7 shows the connection between the directional antenna and jumper, and the jumper connector after treatment.

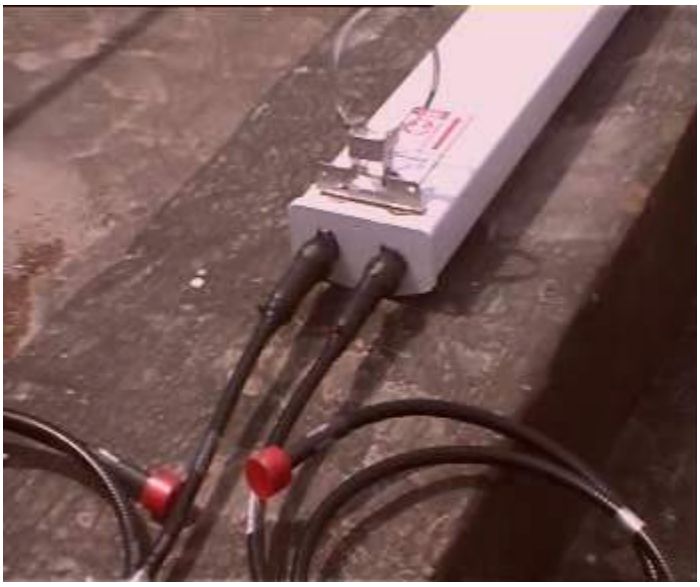

Figure 3-7 Connection between directional antenna and jumper and jumper connector after treatment

---

⚠ **Caution:**

Antenna fixing clip and pitch angle adjustment device must be furnished with spring washers and plain washers in correct installation sequence.

3.3 Installing Grounding Bar

Grounding copper bar is used to connect the PGND and working ground of the cabinet. It should be installed both indoor and outdoor. In indoor installation, it is usually mounted on the wall near the BTS; while in outdoor installation, it is usually mounted near the BTS, yet its specific position is determined according to the actual situation. The structure of grounding copper bar is shown in Figure 3-8.

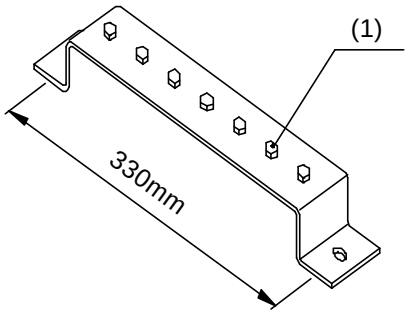

(1) M8 bolt

Figure 3-8 Structure of the grounding copper bar

The installation is shown in Figure 3-9 and Figure 3-10.

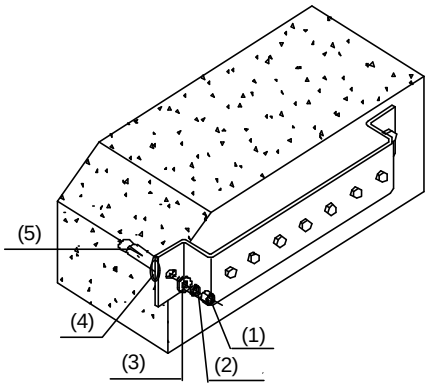

(1) Nut M12 (2) Spring washer ϕ12 (3) Large plain washer
(4) Insulation washer (5) M12×80 exploded expansion bolt

Figure 3-9 Installing the grounding copper bar

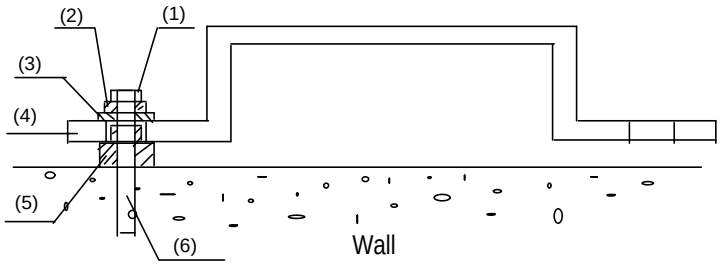

(1) Nut M12 (2) Spring washer ϕ12 (3) Large plain washer
(4) Indoor grounding copper bar (5) Insulation washer (5) M12×80 exploded expansion bolt

Figure 3-10 Sectional view of grounding copper bar installation

The insulation washer is shown in Figure 3-11.

Figure 3-11 Insulation washer

Caution:

Insulation washer should be furnished when the expansion bolt is installed. So the grounding copper bar is insulated from the wall.

3.4 Installing Antenna Support

Note:

In non-turnkey project, the user should prepare the antenna support when preparing the environment. Huawei is responsible for antenna support installation only in turnkey project.

There are a number of structures and types of antenna support. The following gives two installation methods for antenna support as examples, namely, installing antenna support on tower platform and on building-top.

3.4.1 Installing Support on Tower Platform

I. Antenna support structure

Figure 3-12 shows the antenna support installed on tower.

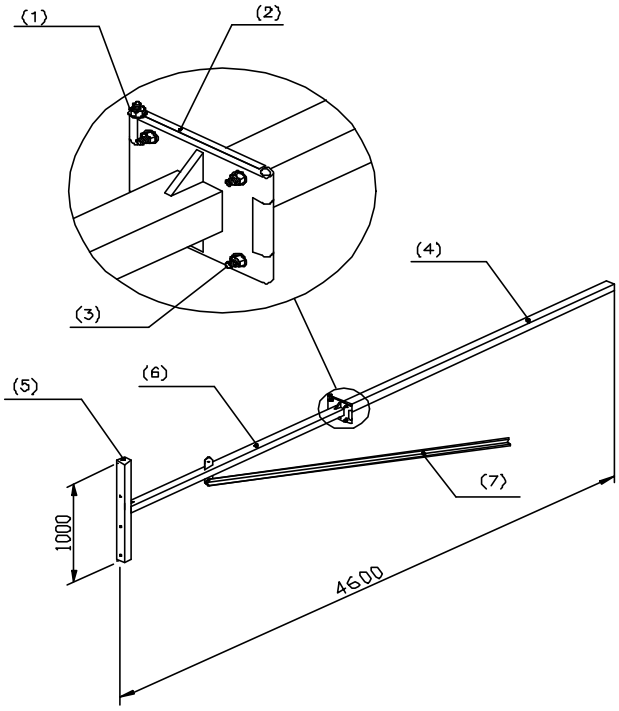

(1) M12×220 bolt (2) Joint soleplate (3) M12×45 bolt (4) Expansion arm
(5) Fixing arm (6) Whirling arm (7) Reinforcing arm

Figure 3-12 Structure of antenna support installed on tower

II. Installation requirements

1) Installation plane of the antenna support should be vertical to the horizontal plane.
2) Tower lightning arrester mast should be installed separately with the height satisfying lightning protection requirements of all antennae. When the support extends out of the tower platform, it should be ensured that the antenna is within the protection range formed by 30° pitch angle of the lightning arrester apex, as shown in Figure 3-13.

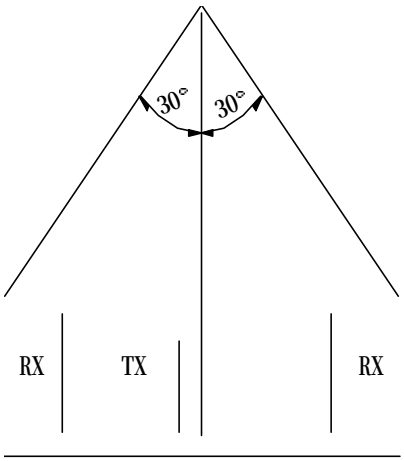

Figure 3-13 Installing the lightning arrester

3) Make sure that the installation direction of the antenna support would not influence the receiving (RX)/transmitting (TX) performance and direction adjusting of the antenna.
4) If necessary, take suspension measures to avoid distortion of the antenna support as it will be in use for a long time.
5) Whirling arm should be reinforced by reinforcing arm. The length of expansion arm and whirling arm may be determined according to the onsite situation. The fracture should be soldered with cover plate to avoid leaking water.
6) All the soldered parts should be secure enough without dry joint and open solder point. The surface of the support should be covered by anti-rust silvery paint. Better choose zinc-coated steel for the support.

III. Installation procedure

1) Install a fast pulley on the tower top. Use one or two lifting ropes to hoist the support to the tower platform via the fixed pulley. Besides, a rope is needed to control the upward direction of the support;
2) Determine the installation position of the antenna support on building-top according to the antenna and feeder installation diagram in the engineering design drawing.
3) Fix the support on the tower with a U-shape fixing clip, as shown in Figure 3-14.
4) Connect the tower platform guardrail and joint soleplate with M12×45 bolt.

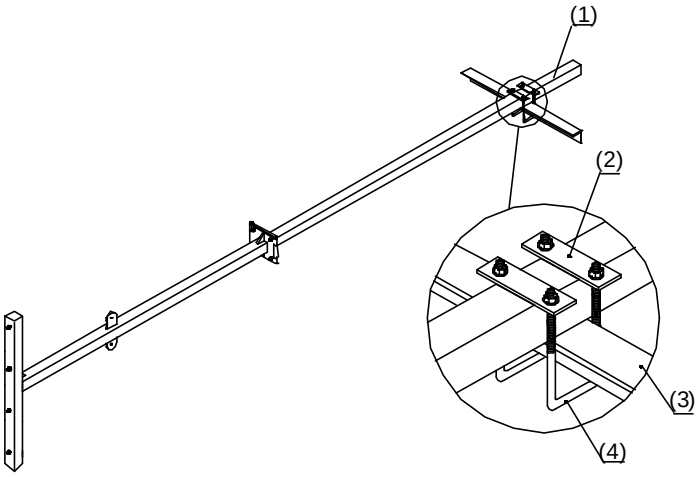

(1) Expansion arm (2) Connecting arm (3) Tower beam (4) U-bolt

Figure 3-14 Installing the antenna support on tower

3.4.2 Installing Support on Building-top

I. Antenna support structure

Figure 3-15 illustrates the antenna support installed on building-top.

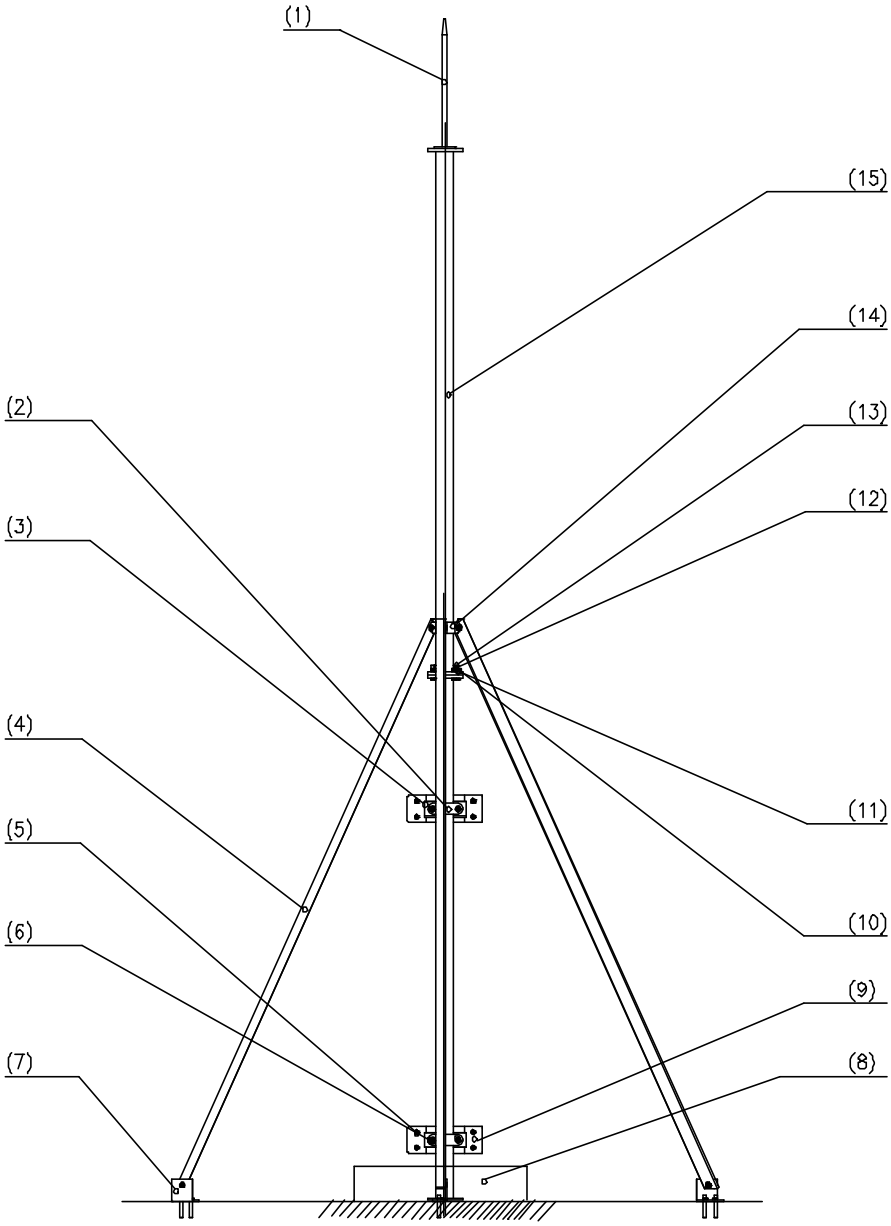

(1) Antenna lightning arrester	(2) 180° joint	(3) V-joint	(4) Reinforcing arm
(5) Expansion M12×120 bolt	(6) Washer ϕ12	(7) Anchor	(8) Covered with concrete
(9) Mounting plate (soldered)	(10) Spring washer ϕ10	(11) Washer ϕ10	(12) Nut M10
(13) M10×45 bolt	(14) 120° joint	(15) Mainstay support of the antenna	

Figure 3-15 Structure of antenna support installed on building-top

II. Installing requirements

1) The installation position of joint for reinforcing arm should not affect the adjustment of antenna direction and pitch angle.
2) Antenna support must be vertical to the horizontal plane.

3) Antenna support on building-top must be equipped with lightning arrester, and the support should be connected to the building lightning-protection network.
4) The surface of the support and all the soldered parts should be covered by anti-rust paint. All the soldered parts should be secure enough without dry joint and open solder point.

III. Installing the support on building-top without parapet

1) Hoist the support to the building-top.
2) Determine the installation position of the antenna support on building-top according to the antenna and feeder installation diagram in the engineering design drawing.
3) Solder the lightning arrester on the mainstay support of the antenna (with the axes aligned).
4) As shown in Figure 3-16, fix the base of the antenna on the building-top vertically with eight M10×45 expansion bolts.

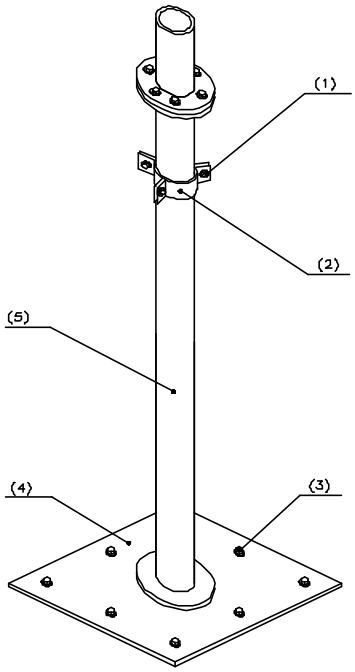

(1) Hexagonal M10×50 bolt
(2) Joint for reinforcing arm
(3) M10×50 exploded expansion bolt
(4) Plastic foot for antenna mainstay support
(5) Mainstay support of the antenna

Figure 3-16 Installing the antenna support base

5) Mainstay support needs to be reinforced with reinforcing arm whose length is determined according to that of the mainstay support. As shown in Figure 3-17, the reinforcing arm is connected to the mainstay support through its joint. Connect the anchors to the reinforcing arm and fix the anchors of each reinforcing arm on

the building-top floor with two M10×45 expansion bolts. Make sure the connection of the reinforcing arms will not be twisted.

6) As shown in Figure 3-17, connect mainstay support 2 with mainstay support 1 tightly with six M10×80 bolts.

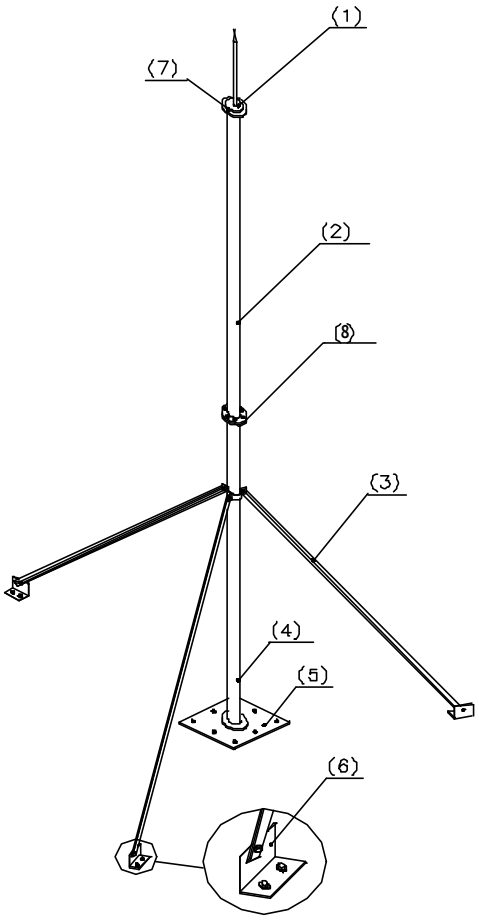

(1) Antenna lightning arrester (2) Mainstay support 2 (3) Reinforcing arm (4) Mainstay support 1
(5) Plastic root for support (6) Anchor of reinforcing arm (7) Soldered parts (8) M10×80 bolt

Figure 3-17 Installing the antenna support

7) There are such cases that the building-top antenna support is not soldered with outdoor cabling rack; or soldered but the cabling rack is not connected with the lightning-protection network of the building. In this case, connect the base of the antenna support to the lightning-protection network of the building with a lightning-protection connecting bar (the lightning-protection connecting bar is the installation parts for outdoor cabling rack).

8) Cover all the soldered parts and the support base with anti-rust paint.

9) Base of the building-top antenna support, anchors of the reinforcing arm and the expansion bolts connected with the floor should all be covered with concrete for protection.

IV. Installing the support on building-top with parapet

If there is parapet around the building-top, and it is inconvenient to install the support on the building-top, just mount the support on the parapet. Figure 3-18 illustrates the antenna support fixing clip mounted on the parapet.

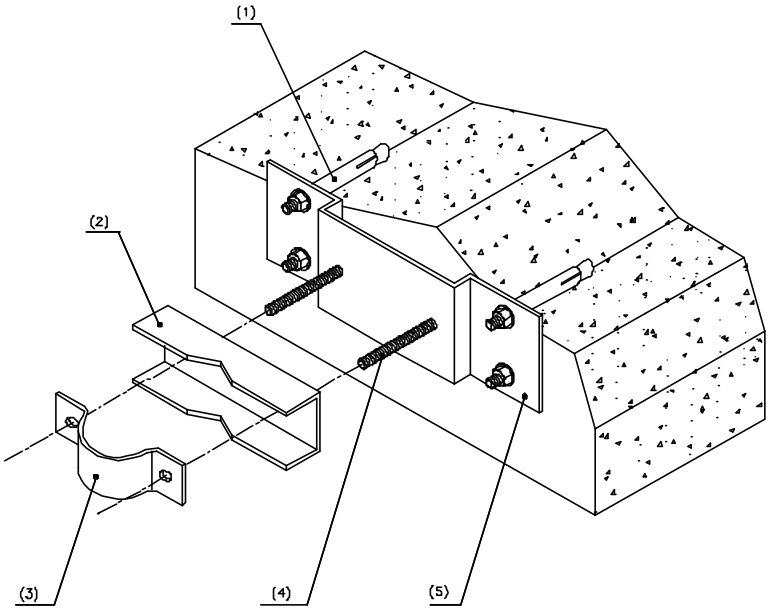

(1) Expansion M 12×120 bolt (2) V-joint (3) 180° joint
(4) M12×140 bolt (5) Mounting plate

Figure 3-18 Fixing clip of antenna support installed on parapet

In the case the parapet is not shorter than 1200mm, fix the two fixing points of the support on the parapet with expansion bolts, as shown in Figure 3-19.

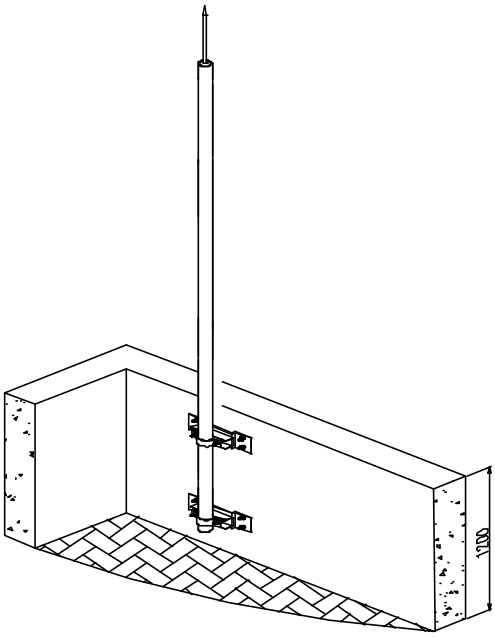

Figure 3-19 Antenna support fixed on parapet (with parapet not shorter than 1200mm)

In the case the parapet is shorter than 1200mm, fix one fixing point of the mainstay support to the parapet with expansion bolt, and the other fixing point to the building, as shown in Figure 3-20.

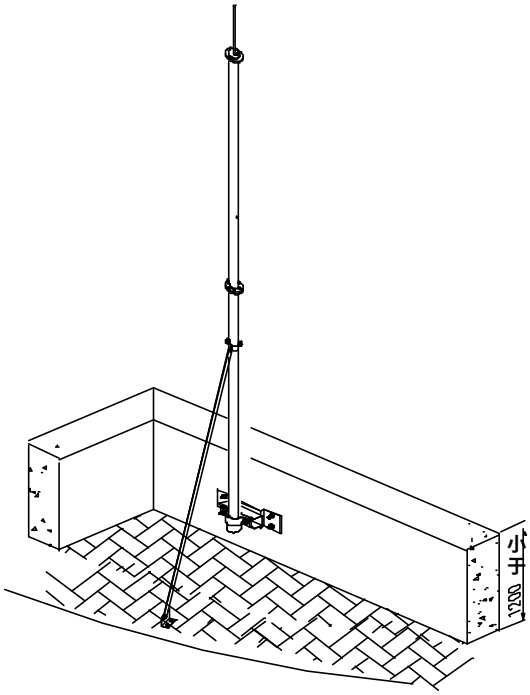

Figure 3-20 Antenna support fixed on parapet (with parapet shorter than 1200MM)

3.5 Installing Antenna

3.5.1 Antenna Facade

The façade of omni antenna and directional antenna is shown in Figure 3-21.

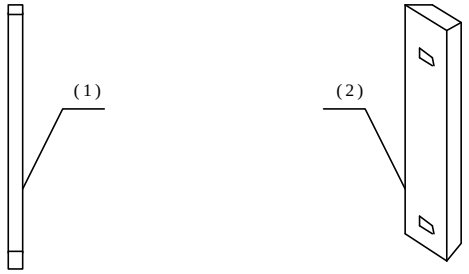

(1) Omni antenna (2) Directional antenna

Figure 3-21 Antennae

3.5.2 Hoisting Antenna

Tie a knot at both ends of the antenna with a rope. Persons both on the tower and down the tower cooperate to hoist the antenna to its position. The persons down the tower should strain on the rope so as to avoid damage to the antenna due to clashing between the antenna and the tower body or the building.

3.5.3 Installing Omni Antenna

Installation of the omni antenna on the tower platform is shown in Figure 3-22.

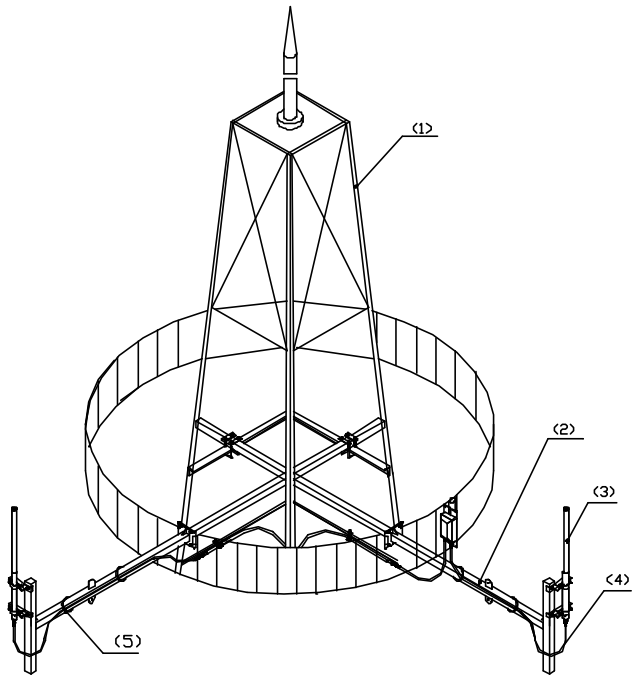

(1) Tower (2) Tower-top antenna support (3) Omni antenna
(4) Jumper waterproof elbow (5) Cable tie

Figure 3-22 Installing the omni antenna on tower platform

I. Installation requirements

- When installing the omni antenna on the tower, make sure the antenna is in the protection range of lightning arrester on the tower. The distance between the omni antenna and the tower body should be left at least 1.5m.
- The antenna axis should be vertical to the horizontal plane with error less than ±1°.
- The TX and RX antenna of omni antenna can be installed on one antenna support, or be separately installed. The specified installation position should be determined according to the engineering design drawing.

II. Installation procedure

1) Make the feeding point of the antenna facing down and the jacket near the mainstay support. The top of the jacket should be on the same level or a little bit higher than the top of the support.
2) As shown in Figure 3-23, secure the antenna fixing clip and the mainstay support properly to ensure its load bearing and wind resistibility. It should not be too tight to damage the jacket of the antenna.
3) Check whether the antenna axis is vertical to the horizontal plane with angle tester. If the error is equal to or greater than ±1°, adjust the antenna axis and then fasten it.
4) Make waterproof elbow at the antenna connector.

5) Route the antenna jumper with natural jumper curves of proper angle. Generally, it is required that the radius of the curves be 20 times larger than the jumper diameter and the jumper be bound to the steel rack of the tower along the support crosspiece with black cable tie.

Caution:

The cable ties should be bound toward the same direction with a margin of 5~10mm to avoid the ties fall off when temperature changes.

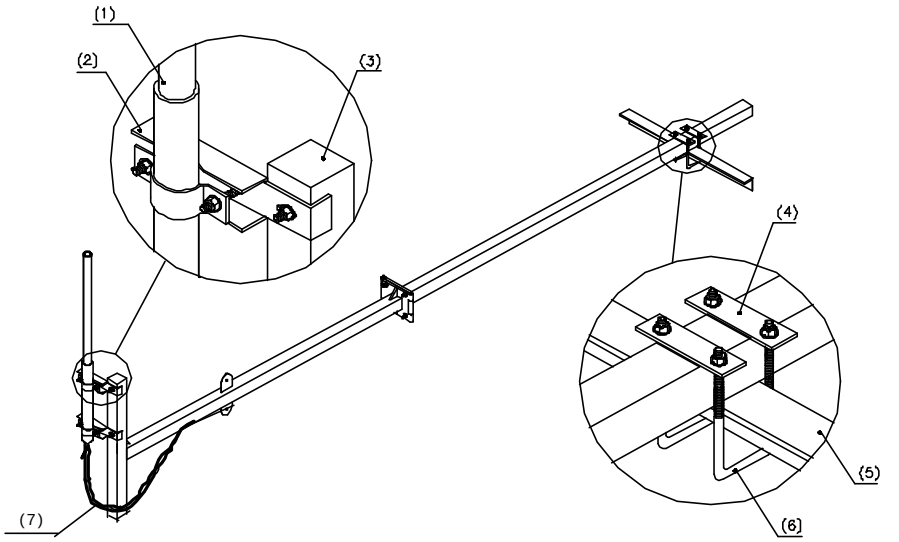

(1) Antenna (2) Joint (3) Fixing arm (4) Connecting arm
(5) Tower beam (6) U-bolt (7) Jumper waterproof elbow

Figure 3-23 Installing the omni antenna

Installation of omni antenna on building-top support is similar to that on tower side. The installation is shown in Figure 3-24.

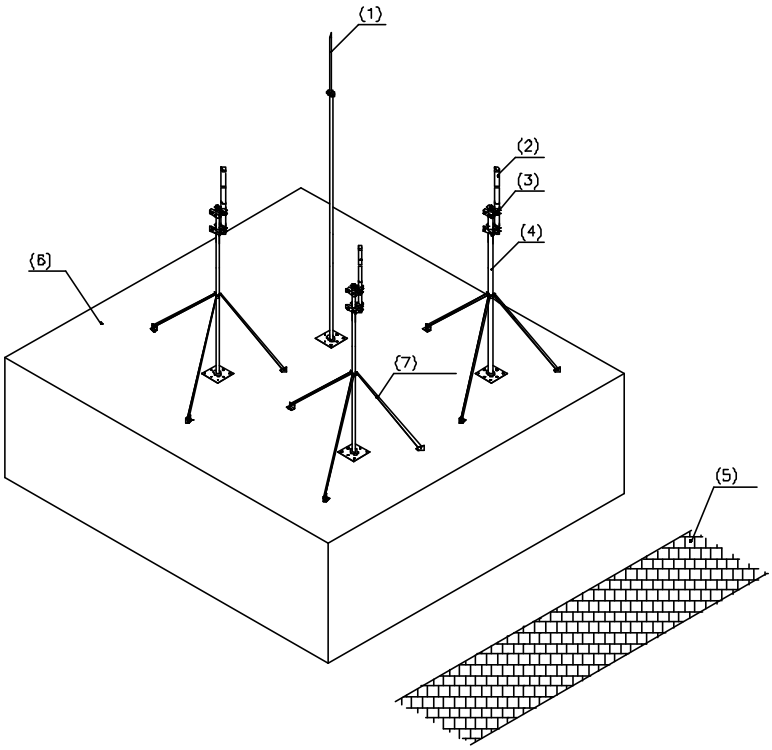

(1) Antenna lightning arrester (2) Antenna (3) Omni antenna fixing clip (4) Mainstay support of antenna
(5) Road surface (6) Building-top (7) Reinforcing arm

Figure 3-24 Installing the omni antenna on building-top support

3.5.4 Installing Directional Antenna

The installation of directional antenna on the tower side is shown in Figure 3-25.

Figure 3-25 Installing the directional antenna on the tower side

I. Installation requirements

- When installing the directional antenna on the tower, make sure the antenna is in the protection range of lightning arrester on the tower. The antenna should stretch out of the tower body for at least 1m.
- Waterproof elbow must be made to the antenna jumper.

II. Installation procedure

1) Determine the installation direction of the antenna according to the engineering installation drawing.
2) Fix the antenna onto the main supporting post. The fixing tightness should be right enough for weight bearing and wind resistance. Looseness may cause loose connection while too much tension may damage the antenna sheathing;
3) Adjust the antenna azimuth angle: Determine the antenna azimuth angle with a compass according to the engineering design documents. Normally, Starting from the north clockwise, the area covered by the first antenna is sector 1. Sector 2 lies in the clockwise 120° direction and sector 3 in the next clockwise 120° direction, as shown in Figure 3-26. While adjusting the azimuth, turn the antenna azimuth slightly till it satisfies the design index value with the azimuth error not greater than 5°.

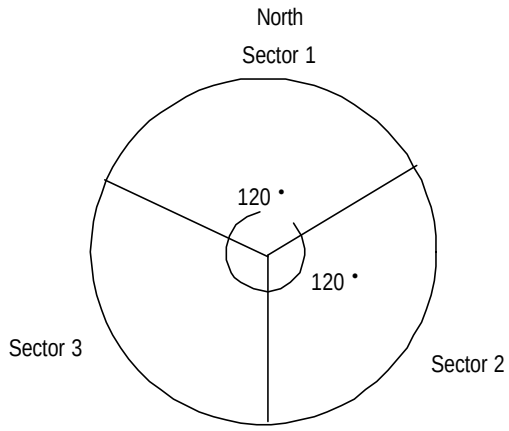

Figure 3-26 Correspondence between directional antenna azimuth and sector

4) Tighten up the lower fixing clip of the antenna till it cannot be moved by hand.
5) Adjust the antenna pitch angle: For the directional antenna whose mounting hole corresponds to its pitch angle, install it via its mounting hole directly. Make sure the supporting post of its support is kept strictly perpendicular to the ground during the installation. Adjust the pitch angles of other antennae in the following way:

- Determine the antenna pitch angle using an inclinometer.
- Turn the antenna slightly and adjust the pitch angle till it satisfies the engineering design index value. Generally the error of the pitch angle should be ⩽0.5°.
- Tighten up the upper fixing clip of the antenna till it cannot be moved by hand;

Use the inclinometer in the way as shown in Figure 3-27 and Figure 3-28.

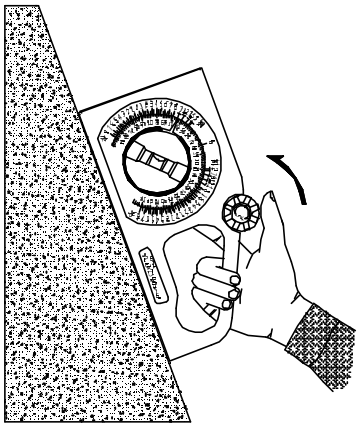

Figure 3-27 Pitch angle of the antenna before being adjusted by the inclinometer

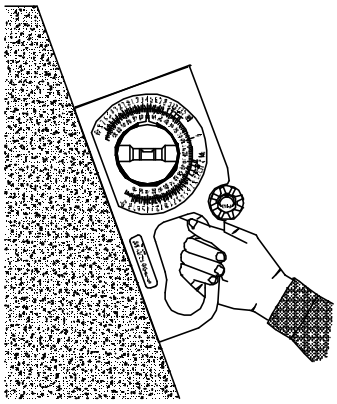

Figure 3-28 Pitch angle of the antenna after being adjusted by the inclinometer

6) Make waterproof elbow for the antenna jumper and route the jumper.

Installation of directional antenna on building-top support is similar to that on tower side. The installation is shown in Figure 3-29 and Figure 3-30.

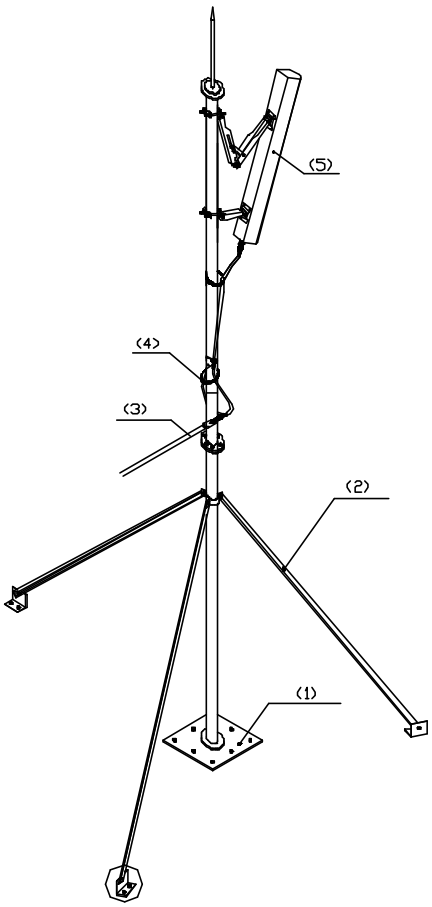

(1) Plastic root of support (2) Reinforcing arm (3) Feeder
(4) Cable tie (5) Antenna

Figure 3-29 Installing the directional antenna on building-top (without parapet)

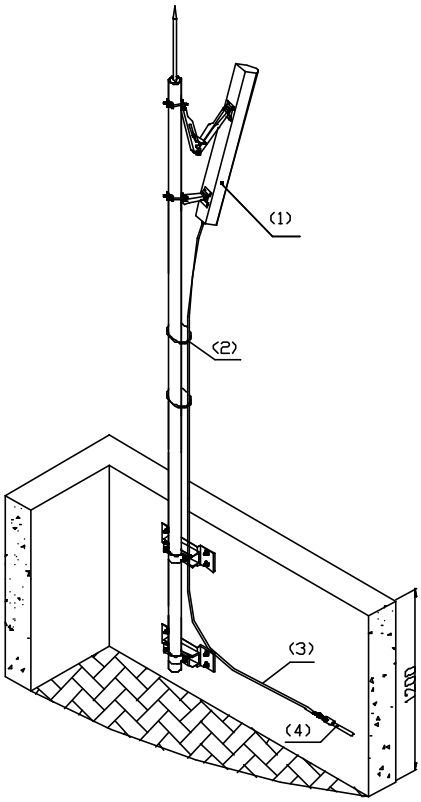

(1) Antenna (2) Cable tie (3) Jumper (4) Feeder

Figure 3-30 Installing the directional antenna on building-top support (with parapet not shorter than 1200mm)

3.6 Installing Feeder Window

3.6.1 About Feeder Window

There are two types of feeder windows: 12-hole feeder window and 27-hole feeder window. The former is used most frequently. Figure 3-31 shows its structure, dimensions and its connection with the sealing gland. The following gives the installation method of 12-hole feeder window only.

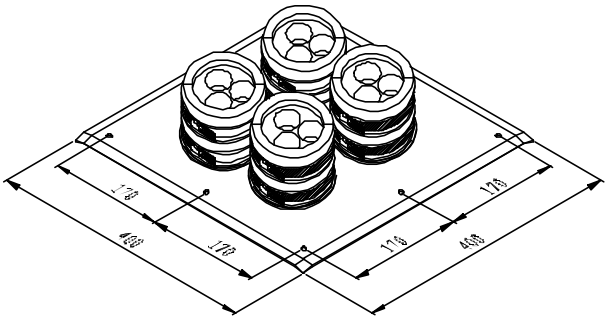

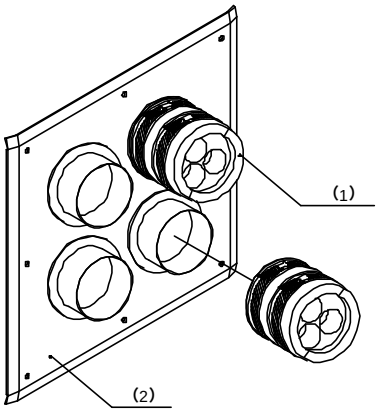

(1) Sealing packing ring of feeder window (2) Feeder window board

Figure 3-31 Structure and dimensions of feeder window

3.6.2 Installing Feeder Window

Feeder window is usually installed outdoors near and above the cabling rack. If feeders enter the equipment room from building-top, the feeder window should be installed on building-top.

Installation procedure is as follows:

1) Determine the indoor installation position for the feeder window according to the engineering design drawing and the dimensions of the window. Mark the positions for expansion bolt holes and for feeder window cavity on the wall.
2) As shown in Figure 3-32, drill a square cavity of 250mm × 250mm on the wall, then drill 8 holes for expansion bolts using a percussion drill.
3) As shown in Figure 3-33, secure the feeder window board with expansion bolts. When mounting the expansion bolts, note the sequence of spring washer and plain washer. The sealing gasket and sealing gland may be mounted when leading the feeder indoor.

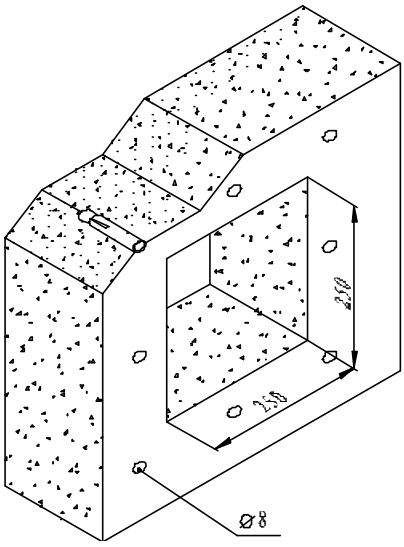

Figure 3-32 Mounting holes for feeder window

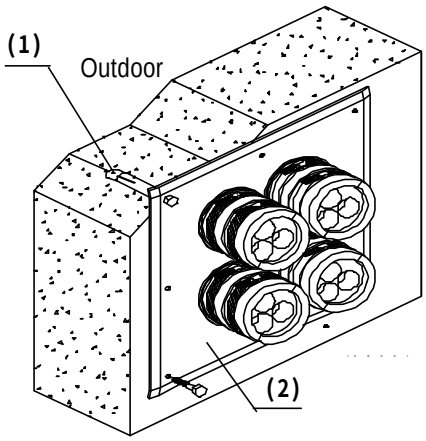

(1) M8×80 exploded expansion bolt (2) Feeder window board

Figure 3-33 Installing feeder window

3.7 Installing Feeders

3.7.1 Cutting Feeder

The feeders can be cut prior to or after feeder hoisting.

1) Determine the length of the feeders required in each sector according to the engineering design drawing;
2) Cut the feeder by the determined length, leaving a margin of 1m~2m. When cutting the feeder, do not bend it and prevent it from being rolled over or stepped on by vehicles or pedestrians;

3) Attach the corresponding labels to both ends of the feeder after cutting a piece.

3.7.2 Hoisting Feeder

1) Wrap the feeder end in a piece of gunny cloth (or antistatic bag) after the corresponding connector is completed. Bind the cloth up using a rope or a binding tape;
2) Knot the lifting rope at the point about 0.4m away from the feeder end and tie another knot at the point about 4.4m away from the feeder end to prepare for feeder hoisting, as shown in Figure 3-34.

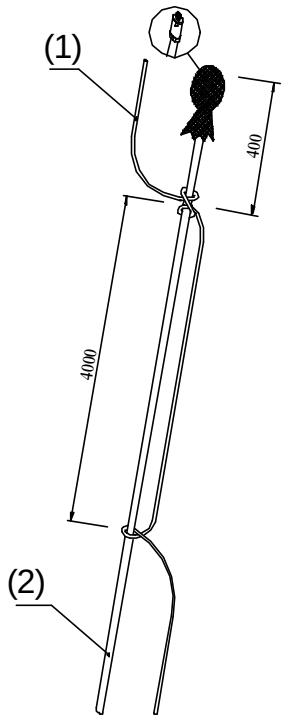

(1) Lifting rope (2) Feeder

Figure 3-34 Protection of feeder connector

3) Hoist the feeder to the tower platform. No violent hoisting is allowed so as to avoid damage to the feeder skin due to possible collision with the building or the tower. In the meantime, take care of your safety.
4) Fix the upper end of the feeder in a proper position by multiple-point fastening lest that the feeder fall from the tower. However, it should not be too close to the antenna, as shown in Figure 3-35. Select 1-for-1 fixing clip or 1-for-3 fixing clip as is required, as shown in Figure 3-36.

Figure 3-35 Feeder upper end fixed on tower

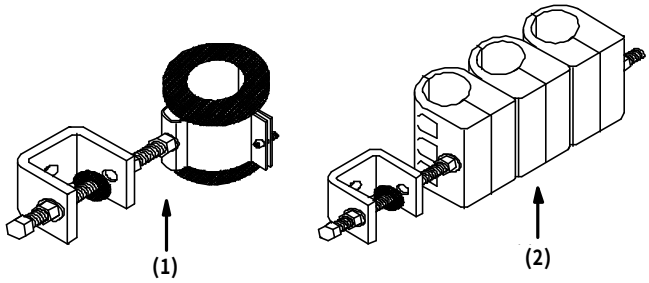

(1) 1-for-1 fixing clip (2) 1-for-3 fixing clip

Figure 3-36 Feeder fixing clip

5) Connect the jumper between antenna and feeder and perform waterproof and encapsulation treatment to the connectors. Attach a temporary label at the point 10cm away from the jumper end.

3.7.3 Routing Feeder

Routing procedure:

1) Design the feeder arrangement according to the sector requirement in the engineering design. Determine the arrangement and lead-in plan. Usually, there is one row or column of feeders in a sector arranged in the same sequence.
2) Route the feeders according to the planned sequence.
3) Arrange the feeders neatly while fixing them onto the tower or the cabling rack with fixing clips. Meanwhile, mount the feeder grounding clip and attach feeder labels.

3.7.4 Affixing Feeder Labels

I. Label format

Figure 3-37 illustrates the standard nameplate used as both indoor and outdoor labels.

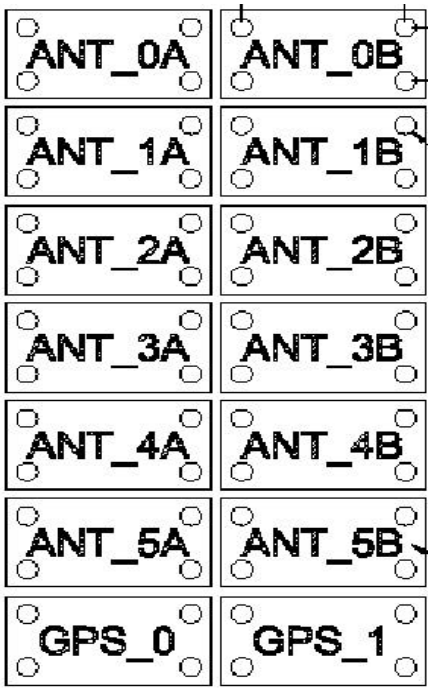

Figure 3-37 RF antenna and feeder label

II. Label position

1) BTS indoor installation mode

Feeder labels can be affixed in three positions, which are (from the top down):

- 0.3m to the outdoor feeder connector;
- Outside the feeder entrance to the feeder window;
- 0.3m to the indoor feeder connector.

2) BTS outdoor installation mode

Feeder labels can be affixed in two positions, which are (from the top down):

- 0.3m to the outdoor feeder connector;
- 0.3m to the front end connecting the BTS.

3.7.5 Grounding Feeders

Installation of feeder grounding clip and routing of feeders are carried out simultaneously. When grounding the feeders, ground the feeder skin with the lightning protection grounding clip. The grounding cable led out should be connected to the

protection grounding bar directly. The following gives description of feeder grounding points in different installation modes.

I. BTS outdoor installation mode

- Within the range of 1m~2m under the antenna;
- The front end connecting the BTS.

Caution:

1) When soft jumper is adopted for the feeder and the feeder is not longer than 5m, the shielding covering of the feeder may be grounded at the front end connecting the BTS.
2) If the feeder is longer than 60m, feeder grounding clips should be applied in the middle of the feeder, with the clip spacing of 20m.

II. BTS indoor installation with the outdoor feeder longer than 20m

- Within the range of 1m~2m under the antenna;
- Within 1m range of the mast or of where the feeder is led from the tower platform;
- At the outer side of the feeder window where the feeder enters the equipment room (connecting to outdoor PGND bar).
- Close to the indoor protection grounding bar after it enters the equipment room.

Others:

- If the feeder is longer than 60m, feeder grounding clips should be applied in the middle of the feeder, with the clip spacing of 20m.
- If the feeder is led into the room after being routed for a stretch of distance on the building-top, and the distance exceeds 20m, a feeder grounding clip should be applied on building-top.
- For the feeder that enters the room from the building-top along the wall, if a cabling rack is used, the cabling rack should also be grounded.
- Feeder grounding cable should be routed toward the BTS antenna and feeder port along the antenna. The included angle between the feeder grounding cable and the feeder should not be greater than 15°. The feeder grounding clip should be directly secured to the steel board on the nearby tower body.

III. BTS indoor installation with the outdoor feeder shorter than 20m

- Within the range of 1m~2m under the antenna;
- At the outer side of the feeder window where the feeder enters the equipment room (connecting to outdoor PGND bar);
- Close to the indoor PGND bar after it enters the equipment room.

Caution:

1) When soft jumper is adopted for the feeder and the feeder is not longer than 10m, the shielding covering of the coaxial soft jumper may be grounded at two points, i.e., below the antenna and indoor.
2) When soft jumper is adopted for the feeder and the feeder is not longer than 5m, the shielding covering of the coaxial soft jumper may be grounded at one point indoor.

3.7.6 Leading Feeder into Equipment Room

I. Feeder arrangement principle

- There are 4 big holes in a 12-hole feeder window, and 3 small holes in each big hole. One feeder can run through a small hole.
- The feeders should be arranged in sequence (i.e. clockwise or counter-clockwise) in the three small holes of the same big hole.
- The arrangement of feeders in the feeder window should facilitate system expansion. The original arrangement of feeders should not be changed during system expansion. It is permitted to add feeders to the feeder window and change the jumper connection on the cabinet top only.
- The arrangement of feeders in the feeder window should facilitate the routing of feeders on the cabling rack and the connection of feeders with the cabinet top. The feeders should be parallel to each other without any cross.
- The length of the feeder entering the feeder window should be 30cm~50cm. If there is an indoor cabling rack, the feeder can be fixed with feeder clip. If not, the feeder may be hanged in air.

Caution:

The minimum feeder curving radius should not be less than 20 times of the feeder diameter.
There should be no cross of the feeder when it is routed along the cabling rack and tower cabling ladder. And there should be no crossing or overlapping of the feeder entering the equipment room. Therefore, it is required to get an idea of the feeder routing prior to feeder distribution. It is best to draft the actual feeder routing on paper to avoid rework due to feeder crossing.

II. Procedure

1) Make waterproof elbow for the feeder at the outer side of the feeder window.

2) Direct the feeders into the equipment room via the feeder window. The corresponding personnel inside the equipment room should guide the operation so as to avoid damage to equipment in the room.
3) Mount sealing gasket and sealing gland. Place the hole for filling in glue on the sealing gland facing upward when mounting the sealing gland.
4) Cut the feeders correctly according to the design requirements.
5) Make the indoor feeder connector.
6) Encapsulate the feeder window and the unused holes with adhesive tape, plaster and glass cement, as shown in Figure 3-38.

Figure 3-38 Encapsulation treatment of the feeder window after feeder enters the equipment room

---

📖 **Note:**

If the feeder needs to run though the window glass, remove the glass first. Cut a corner of proper size of the glass and then use rubber or adhesive tape to protect the edge, in order to avoid the feeder being cut. Measures should be taken to prevent rain after the feeder runs through the glass, that is, seal the connection between the glass and the feeder with glass cement.

3.7.7 Connecting Feeder and BTS

The feeder and BTS should be connected with 1/2 jumper. Feeder connector at BTS side has already been connected during the installation of major equipment. Just connect the feeder and jumper. In the case of outdoor installation of BTS, 3-layer waterproof treatment should be performed in addition.

3.8 System Testing

Use the Site Master to test the antenna and feeder system. Test the standing wave ratio (SWR) of the feeders. The SWR should be smaller than 1.5 in engineering, yet the SWR of the antenna and feeder system newly set up generally should be smaller than 1.3 (the corresponding return loss is 18dB).

For the usage of the Site Master, please refer to relevant operation instructions.

Table of Contents

1 Installation Preparations 1-1
1.1 Personnel Requirements 1-1
1.1.1 Basic Requirements 1-1
1.1.2 Requirements for Antenna & Feeder Installation Personnel 1-1
1.2 Technical Documents Preparation 1-2
1.3 Installation Tools & Instruments Preparation 1-3
1.4 Installation Environment Check 1-6
1.5 Project Plan and Kickoff Coordination 1-6
1.5.1 Project Plan 1-6
1.5.2 Kickoff Coordination 1-7
1.6 Unpacking Check 1-7
1.6.1 *Packing List* Collation 1-7
1.6.2 Unpacking Inspection on Wooden Cases 1-8
1.6.3 Unpacking Inspection on Cartons 1-9
1.6.4 Acceptance and Handover 1-11

1 Installation Preparations

1.1 Personnel Requirements

1.1.1 Basic Requirements

If the project is cooperated with other parties, engineers from cooperation parties shall play the key role in installation, engineers from the user shall provide necessary assistance, and the engineers from the vendor shall supervise the whole installation process.

If the project is not cooperated with other parties, engineers from the vendor shall play the key role in installation, and engineers from the user shall provide assistance.

Engineers from the cooperation party shall be strictly trained and examined by the vendor. Only after they have mastered the installation and testing methods, and obtained the qualification certificates, can they implement the installation and commissioning under the supervision of vendor engineers.

Engineers from the user shall receive some training given by the vendor to master the installation and construction methods prior to the installation.

1.1.2 Requirements for Antenna & Feeder Installation Personnel

The antenna & feeder system is normally installed by the antenna & feeder installation personnel under the supervision of the project supervisor. The number of installation personnel should be determined according to installation environment.

Project supervisor:

- Should be familiar with the materials, tools and methods involved in the antenna & feeder installation.
- Should have a strong consciousness of safety, organize the installation personnel and coordinate their work on the principle of "Safety First", especially for the job on tower.
- Should fill in the engineering data faithfully, e.g., antenna pitch angle, antenna azimuth angle and number of feeders, etc.

Personnel for installation on the tower:

- Should obtain the certificates for the relevant work through relevant training;

- Should be in good health, free of alcohol and have paid for personal safety insurance;
- Should follow the operating requirements for safety appliances and wear safety belts;
- Should not wear loose clothes or slipped shoes. And they must take with them stuffs for binding up wounds.

Caution:

1) The project supervisor should contact users who will present on the site before kickoff so as to prepare the instruments and tools needed. If the feeders are to be routed through the cabling holes between buildings, it is necessary to remind the users of the keys to the rooms or roof corridor through which the feeders run;

2) When multiple persons are needed to climb the tower, the person carrying the tool kit should climb up last and down first lest a barely fallen tool should injure others.

3) The tool kit should be opened only when tools are needed and be closed immediately after getting the tools.

4) All persons on site must wear protecting caps, and each installation team should be provided with a first aid kit;

5) The personnel under the tower are under the obligation to keep persons not related to the project, especially children away from the engineering site;

1.2 Technical Documents Preparation

I. Engineering design documents:

- iSiteC BTS3601C CDMA Base Station Network System Network Planning
- iSiteC BTS3601C CDMA Base Station Engineering Design

These documents should be prepared by the design unit appointed by the user. The user should provide a copy of the documents to Huawei prior to the equipment delivery.

II. Installation guide documents:

- iSiteC BTS3601C CDMA Base Station User Manual;
- iSiteC BTS3601C CDMA Base Station Installation Manual.

The documents should be provided by Huawei in the delivery.

Note:

In the cooperative installation project, the project-related documents such as *iSiteC BTS3601C CDMA Base Station User Manual* and *iSiteC BTS3601C CDMA Base Station Installation Manual* are to be provided to the cooperator by Huawei prior to the project kickoff.

1.3 Installation Tools & Instruments Preparation

All the tools & instruments listed in Table 1-1 and Table 1-2 should be available for the installation.

Table 1-1 List 1 of tools & instruments

	List of universal tools					List of special tools	List of instruments
No.	**Measuring and marking tools**	**Concrete drilling tools**	**Fastening tools**	**Small tools**	**Auxiliary means**		
1	A 50m ribbon tape	A percussion drill	Three Phillips screwdrivers (respectively of 4', 6' and 8')	A hacksaw (with some saw blades)	A pair of tweezers	A non-conductive screwdriver	A multi meter
2	A 5m measuring tape	Some matching bits	Three straight screwdrivers (respectively of 4', 6' and 8')	A tap wrench (with some M4 and M5 screw taps)	A paintbrush	A safety knife	A power meter
3	A 400mm level bar	A cleaner	Four adjustable wrenches (respectively of 6', 8', 10' and 12')	A pair of sharp nose pliers (8')	A pair of scissors	A stripper for 75Ω coaxial cables	Portable computer
4	Marking pen	A terminal block (with three 2-phase sockets and three 3-phase sockets, current capacity >15A)	Combination wrenches (respectively of 17' and 19')	A pair of diagonal pliers (8')	A 300W soldering iron	A pair of connector crimping pliers for 75Ω coaxial cables	Test mobile phone (optional)
5			A set of inner hexagon spanners	A pair of slip joint pliers (8')	A 40W soldering iron	A pair of multi-purpose crimping pliers	Site master
6			A set of socket wrenches	A pair of pincer pliers (8')	Some tin wires		
7			A 5kg nail hammer	A set of broach files (of medium size)	A heat blower		
8				Electrician's knife	A solder absorber		
9				Flat Phillips screwdriver (of medium size)	A pair of hydraulic pliers (or Hercules crimping pliers)		
10					Ladder		
11					Wire nipper		
12					Paper knife		
13					Insulating tape		

Table 1-2 List 2 of tools & instruments

No.	Special tools for antenna & feeder system installation					
	Measuring tools	**Suspension-mounting tools**	**Special tools for feeders**	**Protective tools**	**Tools borrowed from the local user**	**Other tools**
1	An angle display	An assembly pulley	A feeder nipper	Safety belts (for personnel required to operate out of the tower platform)	Double ladder	Canvas bag for tools
2	A compass	Two ropes (1 thin and 1thick, both 150m long)	Cable cutter (applicable for the feeder specification)	Protecting caps	Lifting tools for the main feeder wheel spindle	Gloves
3		Feeder noose	Special tools for making feeders (1/2", 7/8")	Safety ropes		Walkie-talkie
4			Blast lamp (used in the cold environment to warm and soften the waterproof & sealing materials)	Thick union suits		Multi-purpose outlets
5				RF protective clothing		

1.4 Installation Environment Check

During the project preparation, the office personnel shall perform "first check prior to the installation" with survey engineers according to the engineering guidebook and then the second check with the project supervisor and fill in the check items in *Installation Environment Checklist* accordingly. The purpose is to check whether the environment is suitable for the deployment.

1.5 Project Plan and Kickoff Coordination

1.5.1 Project Plan

After confirming the qualification of engineering environment, project supervisor should contact the representative of the user, and draft and notify the user the initial plan list of installation planning and progress according to the condition and preparation of the project.

I. Project interface

In principle, Huawei's *Project Recommendation* and the terms and conditions related to project interface after the negotiation between user and vendor serve as the basis of operation. Below are the common principles:

- The user is responsible for the preparation of equipment room environment;
- The user is responsible for the coordination of the auxiliary equipment in the equipment room;
- The project interface is based on the contract and project files and is finalized by means of the negotiation between both parties.

II. Project coordination and cooperation

- Personnel

The project supervisor is the principal of the project. He is responsible for providing the list of the supervisors of this project and sub-projects and the way to contact them. It is recommended that the user provide the list and contact information of its corresponding technicians.

- Tools

The vendor should in advance inform the user of the tools inconvenient for transportation or tools the vendor cannot provide. And the user should provide these tools.

III. Progress arrangement

The progress of the project should be arranged according to the preparation of the project. A written plan should be worked out and submitted to the user for negotiation and confirmation. The plan should include the following contents:

- Delivery time and expected arrival time;
- Date when engineers arrive the place of the user;
- Progress arrangement of project installation and commissioning.

1.5.2 Kickoff Coordination

After arriving at the place of the user, the project supervisor should call a kick off coordination meeting with the user. In this meeting, both parties should decide their persons in charge, and achieve an agreement on installation period, project schedule and cooperation matters.

1.6 Unpacking Check

In the non-turnkey project, both the user and the project supervisor (engineer from Huawei or cooperative party) are required to be present at the unpacking site. If one party is absent at the unpacking site, another party who unpacks shall responsible for any error occurring to the articles.

In the turnkey project, it is the project supervisor and the order management engineers, who unpack, check & accept, hand over the articles, and make a confirmation with signatures. The operation of Unpacking check and problem feed back in this case is almost the same as that of the non-turn key project, except that the user does not need to sign. The goods will be handed over to the user after passing the initial check of the project.

The following will mainly deals with the former case.

1.6.1 *Packing List* Collation

Before unpacking, both parties should check if the packing cases are damaged. If so, stop unpacking and contact the order management engineer at the local office of Huawei, waiting for the handling. Meanwhile, check if the quantity of cases on the site agrees with the *Packing List*, and if the place of delivery agrees with the actual installation place. If there is any disagreement, the project supervisor should feed back the Article Problem Feedback Form confirmed by the user with a signature to the order management engineer at the local office within 3 days.

After all the above inspections are ok, unpack the cases to check and accept the articles.

There are two kinds of packages: wooden cases and cartons. The unpacking tools should be used accordingly.

Note:

The Packing List is usually in the carton with red label.

1.6.2 Unpacking Inspection on Wooden Cases

Generally, the wooden case is used to pack heavy items, such as cabinet and feeder clips, etc.

The packing materials for the cabinet include the wooden case, foamed wrap angles and a plastic bag, as shown in Figure 1-1. Better not unpack the package until moving it to or near the equipment room (if enough space is available) so as to avoid damages to the unpacked cabinet.

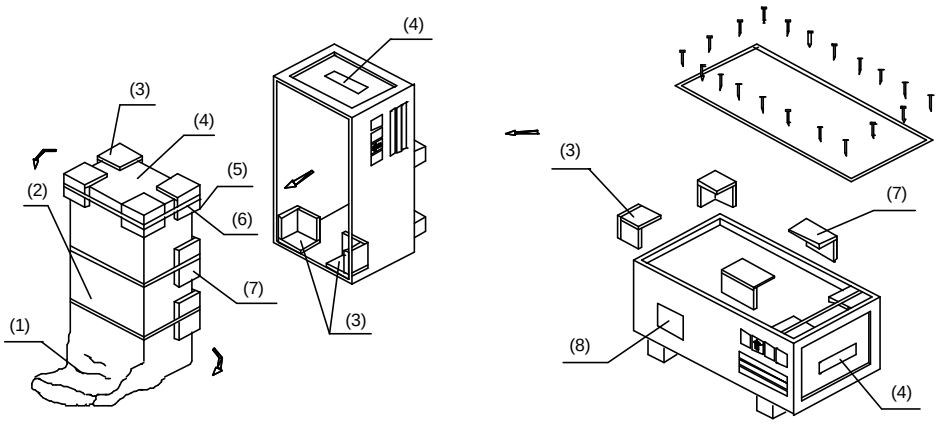

(1) Moisture-proof bag
(2) Wooden case back
(3) Foamed wrap angle
(4) Wooden case top
(5) Wooden case front
(6) Pressure-sensitive tap
(7) Foamed L-square
(8) Packing label

Figure 1-1 Wooden case

Unpack the package as follows:

1) Pry the outer iron sheet and unpack the cover plate using the nail hammer, the pliers, the straight screwdriver and the crowbar.
2) Insert a straight screwdriver in the skin plate seam and loosen the plate. Then insert the crowbar to pry it off the package.
3) Erect the wooden case and take out the equipment. Do not remove the plastic bag before the equipment is taken out.

4) Remove the plastic bag.

Inspect the cabinet for the following problems:

- Whether there is any defect on the cabinet appearance;
- Whether the whole cabinet is deformed;
- Whether the environment inside the cabinet is clean;
- Whether other goods such as the storage battery and feeder clip are all there and intact.

Caution:

1) If the inner packing is damaged, it should be recorded in the report in detail.
2) After unpacking, if there is no internal damage, personnel from Huawei should play the major role in inspection of the equipment especially the parts whose electrical performance is easily affected. If there is any damage, Huawei should be responsible for handling or compensation.
3) If any article is found inconsistent with the Packing List, please contact Huawei in time.
4) The checked goods should be organized by type.

1.6.3 Unpacking Inspection on Cartons

Generally, the carton is used to pack various modules and terminal equipments, etc. The module is placed in an antistatic bag for transportation. Inside the bag, there is a desiccant to keep it dry. The packing of a module is shown in Figure 1-2. Antistatic measures should be taken during the unpacking so as to avoid any damage to the equipment. Meanwhile, ensure a proper ambient temperature and humidity.

Caution:

When moving the equipment from an environment with a relatively low temperature and humidity and to that with a relatively high temperature and humidity, unpack it until at least 30 minutes later. Otherwise, the moisture may condense on the equipment surface and thus cause damage.

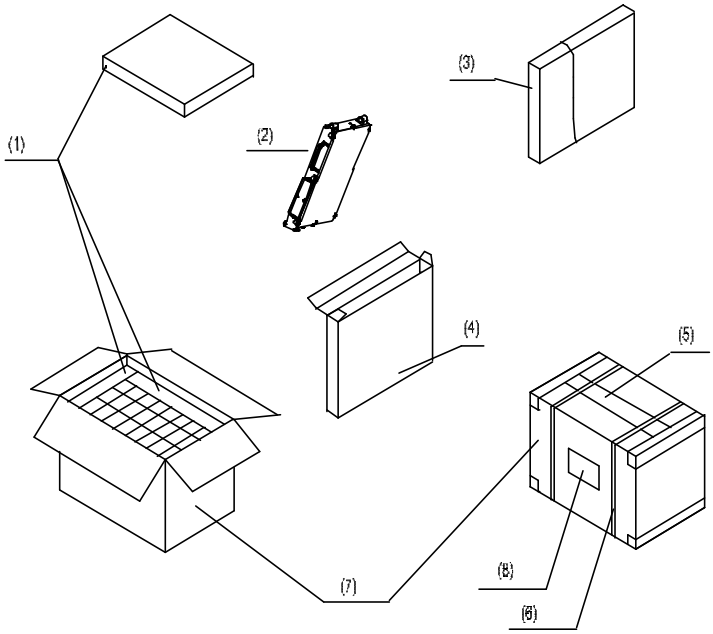

(1) Foam plate (2) Module (3) Antistatic bag (4) Board box
(5) Pressure-sensitive adhesive tape (6) Packing tape (7) Carton (8) Carton label

Figure 1-2 Unpacking of the module

Unpack the carton as follows:

1) Check the type and quantity of the modules as per the carton label;
2) Snip the packing tape using a pair of diagonal pliers;
3) Rip the adhesive tape along the joint seams using a paper knife. Be careful not to insert the knife too deep, avoiding damage to the modules;
4) Unpack the carton and take out the foam plate;
5) Check whether the quantity marked on the label of the module box is in compliance with that on the carton label. If yes, take out the module box;
6) Open the module box and take out the module from the antistatic bag.

Caution:

1) Anti-static measures should be taken when holding the modules;
2) When the module box is open, the module shall be seen wrapped in a packing bag and an antistatic bag. Do not tear or discard these two bags, as they can be used to store the spare modules or to wrap the failure modules for repair.

Check the goods after unpacking. The next unpacking cannot be done unless the present unpacking check has been finished. Make sure that no more modules in the cartons before opening the next. Avoid discarding the cartons before all modules have been taken away from it. The check covers:

- Whether the internal packing has been damaged;
- Whether the number and type of the modules are in line with the *Packing List*;
- Whether there is any broken printed circuit modules or any components detached from the module.

Caution:

1) For inner packing, any breakage of the inner packaging should be recorded in detail;
2) Check all the boards as per the delivery list. If any nonconformity, contact the vendor immediately.
3) The check goods should be organized by type.

1.6.4 Acceptance and Handover

After the acceptance, both parties must sign on the *Packing List* to confirm that there is no problem with the articles. After that, the articles are handed over to the user.

During the inspection, if "outstanding articles" is stated in the *Packing List*, it is necessary to feed it back to the order management engineer at the local office. The order management engineer will urge the relevant department of Huawei to deliver the outstanding articles as soon as possible and meanwhile sign on the *Packing List*. In the case of shortage of articles, wrong articles, extra articles delivered or damage of articles, both parties should sign the Unpacking Inspection Memo and Packing List. Meanwhile, the project supervisor should fill in the Article Problem Feedback Form and feed it back to the order management engineer at the local office within 3 days. The project supervisor should also be responsible for well keeping the original condition of articles with problems as well as the inner and outer packing, for future investigation and verification.

The person assigned by the user will take charge of the articles after the acceptance and the handover. The articles should be stored in a special room where should have appropriate temperature and humidity, little shock, little dust, satisfactory antistatic measures and be rodent-proof and free from any intense electromagnetic interference. The user should bear the consequences of any damage or loss to the equipment due to improper storage thereof.

During the implementation, if there are any damaged parts or any other parts need to be replaced or re-issued, the project personnel should carefully fill in the *Article*

Problem Feedback Form and feed it back in time to the article manager at the local office to put it on records.

Table of Contents

2 Installing Cabinet Hardware.....2-1
2.1 Hardware Components 2-1
2.1.1 Component Structure 2-1
2.1.2 Introduction of Hardware Major Equipment 2-2
2.1.3 Introduction of Hardware Auxiliary Equipment.....2-2
2.1.4 Installation Mode.....2-3
2.1.5 Installation Flow.....2-3
2.2 Installation Planning.....2-5
2.2.1 Example of Indoor Wall Installation.....2-5
2.2.2 Example of Indoor Plinth Installation.....2-6
2.2.3 Example of Concrete Pole Installation 2-6
2.2.4 Example of Metal Mast Installation on Building-top 2-9
2.2.5 Example of Tower Installation 2-11
2.3 Installing Major Equipment 2-13
2.3.1 Installation Flow.....2-13
2.3.2 Installing BTS3601C on the Wall 2-14
2.3.3 Installing BTS3601C on Plinth.....2-18
2.3.4 Installing BTS3601C on Metal Mast and Concrete Pole 2-20
2.3.5 Installing Modules 2-22
2.3.6 Installing Cables 2-24
2.3.7 Installing Shell 2-30
2.3.8 Installing Sun-shading Cover 2-31
2.4 Installing Auxiliary Equipment 2-31
2.4.1 Installing IAFB 2-32
2.4.2 Installing AC Lightning Protection Box.....2-33
2.4.3 Installing UPS 2-39
2.4.4 Installing IABB 2-39
2.5 Installing Cables 2-47
2.5.1 Cable Connection Requirements.....2-48
2.5.2 Networking of AC Lightning Protection Box.....2-52
2.5.3 Networking of IAFB 2-55
2.5.4 Networking of Inverter 2-65

2 Installing Cabinet Hardware

2.1 Hardware Components

Major equipment of Base Transceiver Station (BTS) hardware to be installed include rack, Micro-bts AC-DC Power Supply Module (MAPM), Micro-bts Base-band Processing Module (MBPM), Micro-bts Transceiver Module (MTRM), Micro-bts Radio Frequency Front End Module (MFEM), Micro-bts Power Amplifier Module (MPAM) and plastic shell. In addition, a sun-shading cover should be installed to ensure the reliability of BTS that is installed outdoors.

Besides the above major equipment, BTS also comprises auxiliary equipment in actual installation environment, such as iSite Auxiliary Facility Box (IAFB), AC lightning protection box, Uninterrupted Power Supply (UPS) and iSite Auxiliary Battery Box (IABB).

2.1.1 Component Structure

Figure 2-1 shows the major components of the BTS.

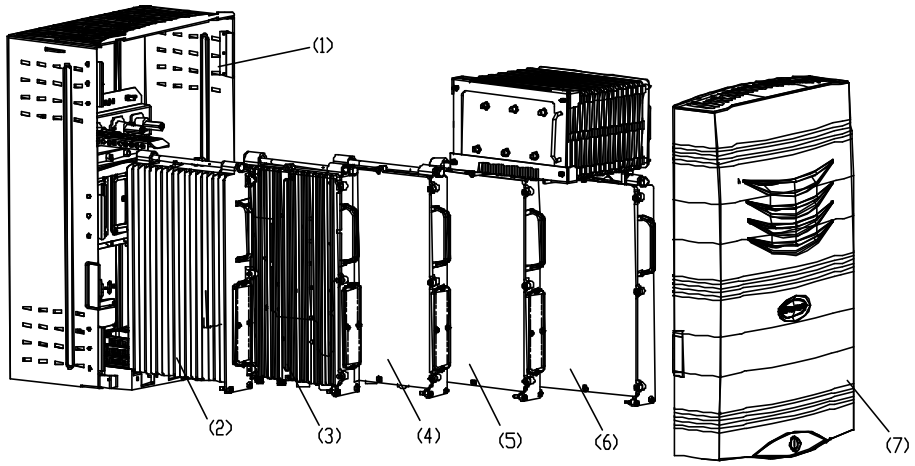

1) Rack 2) MAPM 3) MBPM 4) MTRM
5) MFEM 6) MPAM 7) Plastic shell

Figure 2-1 BTS structure

2.1.2 Introduction of Hardware Major Equipment

I. Rack

Rack is composed of backplane box, module guide rail, and back shell to bear various modules.

Backplane box has been fixed on the back shell before delivery. Modules are connected to the backplane box via connectors, on which waterproof measures have been taken.

Module guide rail is also fixed on the back shell, along which modules like MAPM, MBPM, MTRM, MFEM, and MPAM are installed from left to right in their corresponding slots.

Back shell can be installed via installation accessories on walls, standing supports, concrete poles, metal masts, towers, etc. That is, there are multiple choices when determining the BTS site.

II. Modules

Modules are the core of BTS, including MAPM, MBPM, MTRM, MFEM and MPAM. Each module is sealed for waterproof, and bottom leading-out mode is adopted for their corresponding cables.

MPAM has been installed with heat-pipe radiator before delivery, so be carefule not to damage the heat pipe during installation.

III. Plastic shell

Plastic shell is buckled on the rack and then fixed and locked after the cable distribution. So the installation of major equipment of BTS is completed.

2.1.3 Introduction of Hardware Auxiliary Equipment

Auxiliary equipment of BTS includes IAFB, AC lightning protection box, UPS, and IABB. All auxiliary equipment can work outdoors and is optional according to actual installation environment and project requirements.

I. IAFB

IAFB can provide certain assistance for BTS, i.e. it can hold the major auxiliary equipment of BTS so as to realize the integrated outdoor installation of auxiliary equipment of the BTS.

II. AC lightning protection box

The box helps to realize the ligtning protection for the AC input power of BTS. In terms of varied discharging currents of the box, it can be classfied into three types 20kA, 40kA and 100kA. In this manual, all AC lightning protection boxes are of 20kA type.

III. UPS

It is recommended to adopt no-wind UPS with the battery voltage 72V. The packing of UPS is sunshine-proof, waterproof and moistureproof, so the UPS can operate in outdoor environment.

IV. IABB

The backup power battery groups of BTS can be placed in the IABB safely satisfying the backup power supply requirement of the BTS. The box structure is similar to that of IAFB.

2.1.4 Installation Mode

In terms of environment, the BTS can be installed in the following modes:

- Indoor installation
- Outdoor installation

In terms of conditions, the BTS can be installed in the following modes:

- Wall installation (Installing BTS on wall)
- Plinth installation (Installing BTS on plinth)
- Pole installation (Installing BTS on pole)
- Metal mast installation (Installing BTS on metal mast)

2.1.5 Installation Flow

Installation flow is almost the same no matter which mode is adopted.

Figure 2-2 shows the installation flow of BTS hardware system.

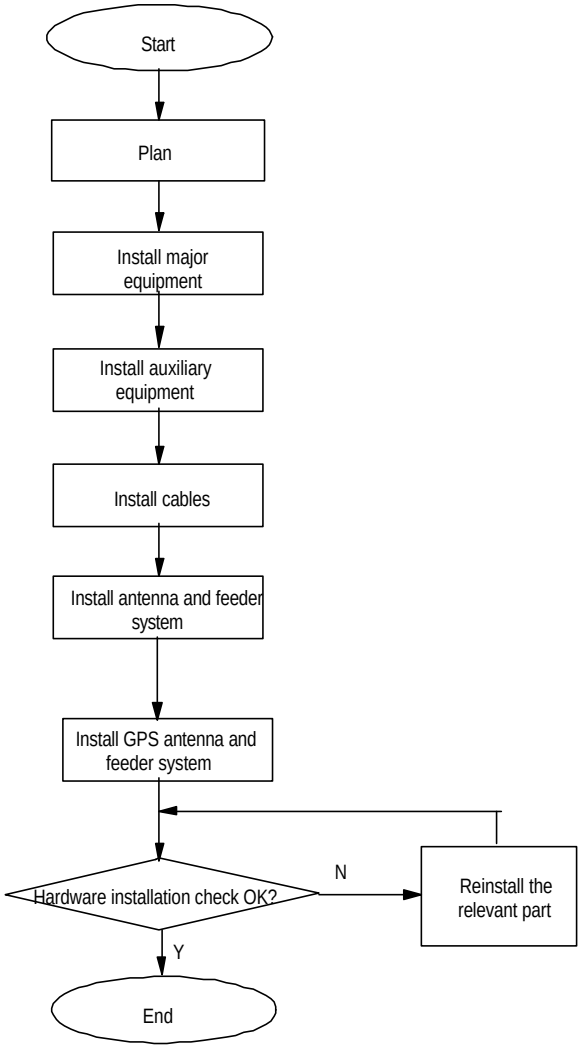

Figure 2-2 Hardware installation flow

I. Description

1) Planning

You can start to install the BTS only after plans have been made for the installation positions and cable distribution of all equipment, and relevant support equipment like supports and masts have been prepared.

2) Installing major equipment

BTS major equipment refers to the hardware equipment that accomplishes the major functions of the BTS.

3) Installing auxiliary equipment

BTS auxiliary equipment refers to the equipment that provides power and functions like lightning protection and transmission for the major equipment of the BTS.

4) Installing cables

Connect cables among all above equipment after their installation. Cables include transmission cables, power cables and grounding cables.

5) Installing antenna and feeder system

Installing antenna and feeder system is to install antennae, prepare connectors, etc.

6) Installing GPS antenna and feeder system

Installing GPS antenna and feeder system is to install GPS receive antenna and lightning arrester, prepare connectors, etc.

7) Checking hardware installation

Check the installation quality and accept the installation of BTS hardware upon completion.

2.2 Installation Planning

Following are several typical installation layout examples for reference.

2.2.1 Example of Indoor Wall Installation

Figure 2-3 shows the indoor wall installation of BTS with IAFB.

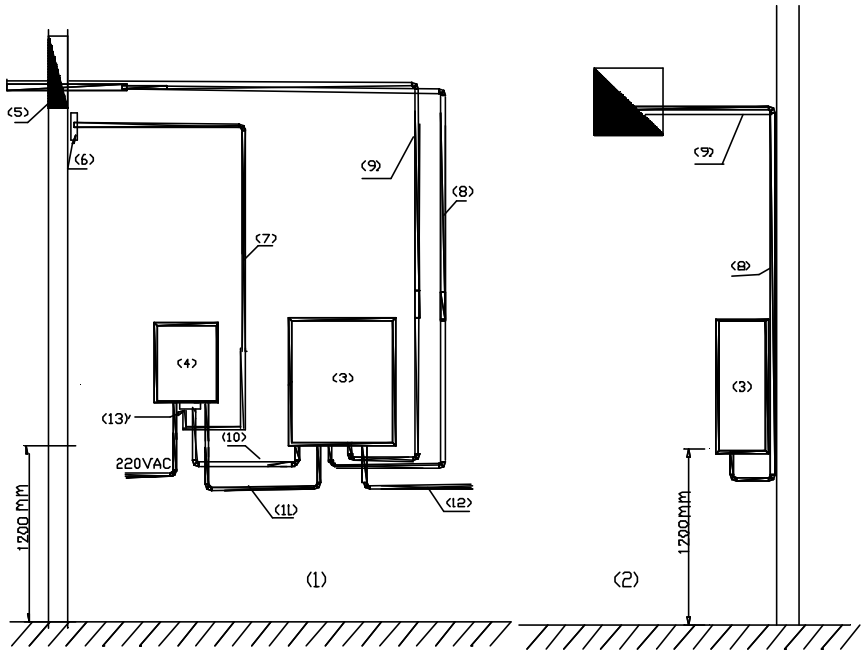

1) Front view
2) Side view
3) BTS3601C
4) IAFB
5) Feeder window
6) Indoor grounding bar
7) Protection Ground (PGND) bus
8) Global Positioning System (GPS) feeder
9) Jumper
10) BTS PGND cable
11) Power cable
12) Fiber
13) IAFB grounding bar

Figure 2-3 Installing BTS on the wall

2.2.2 Example of Indoor Plinth Installation

Inside the equipment room, if BTS cannot be installed on the wall (e.g. structure pole, hollow wall body, clapboard wall in the simplified equipment room), it can be installed on the plinth. The position of the plinth should be as close to the wall as possible.

Figure 2-4 shows the indoor plinth installation of BTS with IAFB.

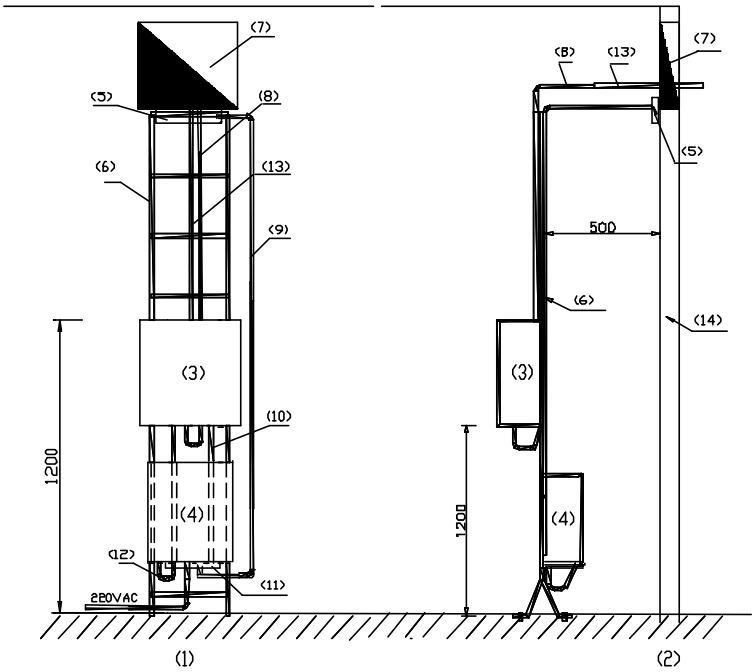

1) Front view	2) Side view	3) BTS3601C
4) IAFB	5) Indoor grounding bar	6) Support
7) Feeder window	8) Jumper	9) Protection grounding
10) BTS3601C PGND cable	11) IAFB grounding bar	12) Power cable
13) GPS feeder	14) Wall	

Figure 2-4 Installing BTS3601C on the plinth

2.2.3 Example of Concrete Pole Installation

This installation mode applies to such environment as fields, villages, towns, road sides, etc. to cover the locations like villages and towns. In this case, two poles must be used in the installation no matter that the BTS to be installed is an omni BTS or a directional one.

I. Facility requirements

- The standard spacing between two poles should be 5m (not less than 3.5m at least), and horizontal diversity distance between two antennae should be 6m (not less than 5m at least). For an omni BTS, a metal mast should be used to meet the

requirements for horizontal diversity between two antennae. For a directional BTS, only a dual polarization antenna is required and the spacing between two poles should be determined for the convenience of platform establishment.

- If the platform is established 3m above the ground, for an O(1) BTS, the platform should be strong enough to bear the load over 500kg; for an S(1/1/1) BTS, the platform is required to bear the load over 1500kg.
- Between two poles, two or more metal fixing beams should be installed. And at the joints between beams and poles, the beams should be welded reliably with the down leads of pole lightning arresters. Dot welding is not allowed. It is recommended to install a metal fixing beam respectively on the platform and at the place 2m above the platform. And install two (according to the type of BTS) 2m metal holding supports between two beams by soldering so as to bear the BTS3601C and other equipment. The diameter of each holding support is 60mm~114mm, and the spacing between them is 80cm.
- Install a vertical cabling ladder (300mm wide) via the metal fixing beam between two poles. The lower end of the ladder should be 1.2m away from the platform. Connect the fixing beams, on which the cabling ladder is fixed, to the flat steel (for lightning protection and grounding) by soldering. Dot welding is not allowed.
- The antenna support is made of steel pipe with the diameter 60mm~114mm. The omni antenna should be 1m away from the antenna support horizontally. In the case of a directional antenna, its holding support may remain unextended.

II. Layout

Figure 2-5 shows the installation of BTS3601C by two concrete poles.

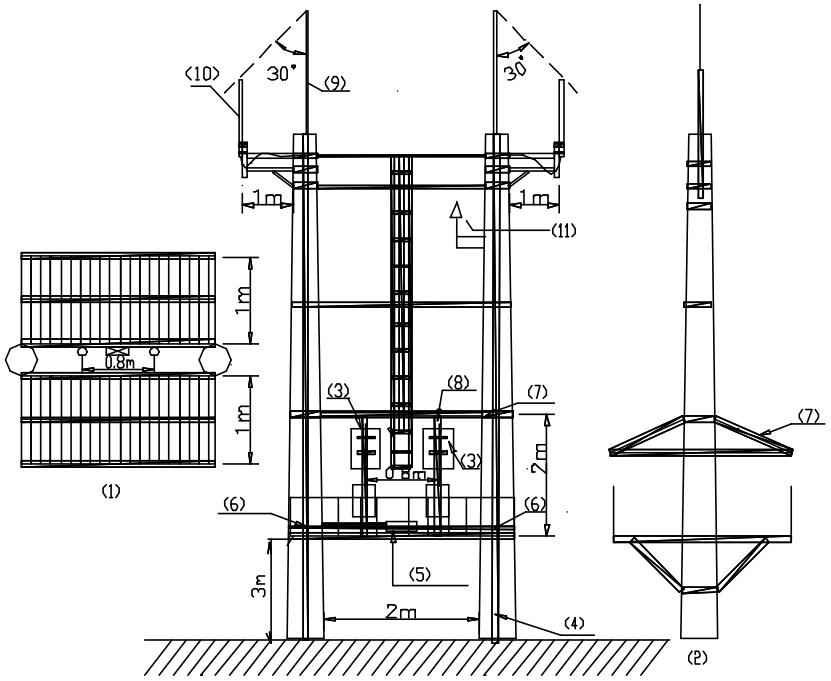

1) Top view
2) Side view
3) BTS3601C
4) Lightning protection grounding flat steel
5) Grounding bar
6) Soldering point
7) Sun-shading cover
8) Holding support
9) Lightning arrester
10) Omni antenna
11) GPS antenna

Figure 2-5 Installing BTS3601C on two poles

III. Note

- To facilitate the introduction of power cables and trunk cables, first determine the metal holding support on which the BTS3601C is to be installed. IAFB or AC lightning protection box can be installed below the BTS3601C. The IABB can be fixed on the platform directly. If more than 2 battery boxes are needed, a platform should be established below the platform.
- Equipment like the BTS3601C, IAFB, UPS, etc. should be installed between two poles via metal parts. It is not allowed to directly install them on poles.
- When feeders are used, the antenna jumpers should be bound on the crosspieces of poles via cable ties. For the convenience of feeder connector preparation and maintenance, it is prohibited to lay feeders transversely. The feeders should be routed along the sides of the cabling rack.
- If the poles are not long enough, it is recommended to connect the antenna and the BTS3601C via jumper. And the jumper should be bound at the sides of the cabling rack and on the crosspieces of poles via cable ties. Both ends of the jumper should be grounded.
- Lightning arresters should be respectively installed on two poles, and the antenna of the BTS3601C should be in the protection range of the two arresters (pitch

angle 30°C between them), as shown in Figure 2-5. The 40mm×4mm hot-gavanlizing flat steel should be used as the downleads of arresters.

- The external shielding layer of the BTS3601C antenna and feeder should be grounded at the bottom of the antenna and at the front end beofore they are connected to the BTS3601C. The grounding cable should be connected to the cabling ladder or other metal grounding parts. The grounding cable should be made of yellow-green (or black) plastic insulation copper wire with the core diameter not less than 6mm^2.
- Grounding bar can be installed on the metal holding support, or fixing beam, or platform directly and reliable electric connection should be achieved among the grounding bar and the metal parts aforementioned. A dedicated grounding downlead should be installed on the grounding bar and be connected to the counterpoise.
- Power cables and trunk cables should not be winded or bound on the arresters or their downleads, instead, these cables should be kept as far as possible from the downleads of arresters. Power cables and signal cables should be distributed horizontally and the spacing between any two cables should be at least 5cm. And they should not be routed vertically and crossly.

2.2.4 Example of Metal Mast Installation on Building-top

Such installation of BTS3601C is applied for the coverage of villages and towns.

I. Facility requirements

- For an omni BTS, 3 masts should be used (one is used to install the lightning arrester and the other two to install two monopole omni antennae. The spacing between the latter two masts should be over 4.5m. Two masts are generally used for a directional BTS, as dual polarization antenna is adopted for the BTS.
- The length of the mast should be determined by the height of the BTS3601C antenna. However, based on the conditions on building-top, the mast length should not be more than 8m.
- The mast should be made of steel pipe with sufficient intensity and the dialmeter from 60mm to 114mm. Each mast must be secured by three steep ropes at least.
- A cabling rack should be installed between the masts on which the antenna is fixed. Its height should be lower than 1.2m.
- The PGND bar should be fixed to the AC lightning protection box or at the bottom of the IAFB mast and close to the building wall. Following are three methods to connect the PGND cables:

  a) If the equipment room is located in the building, lead the grounding cable from the building-top to the grounding bar in the equipment room;

  b) Connect the grounding cable to the counterpoise at the building bottom;

c) Connect the grounding cable to the lightning protection zone on the building-top.

II. Installation layout of an omni BTS3601C

As shown in Figure 2-6, the mast in middle is used to install the lightning arrester; while in the rest two masts, the one being installed with BTS3601C is called master mast, and the other is called slave mast.

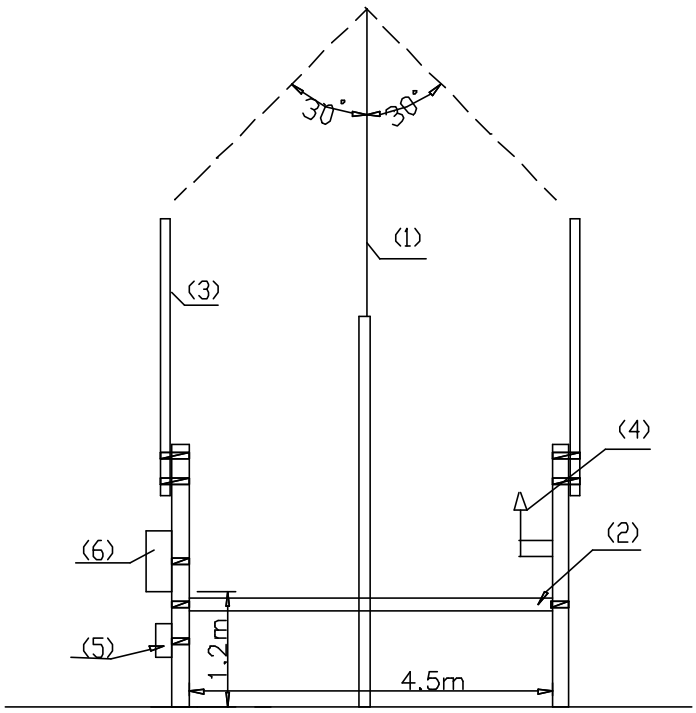

1) Lightning arrester 2) Cabling Rack 3) Antenna
4) GPS antenna 5) IAFB 6) BTS3601C

Figure 2-6 Omni BTS3601C installation on metal masts

III. Installation layout of a directional BTS3601C

Figure 2-7 shows the installation of a directional BTS3601C cascaded with an ODU3601C. The mast, on which the BTS3601C is installed, is called master mast, and the one where the ODU3601C is instaled is called slave mast.

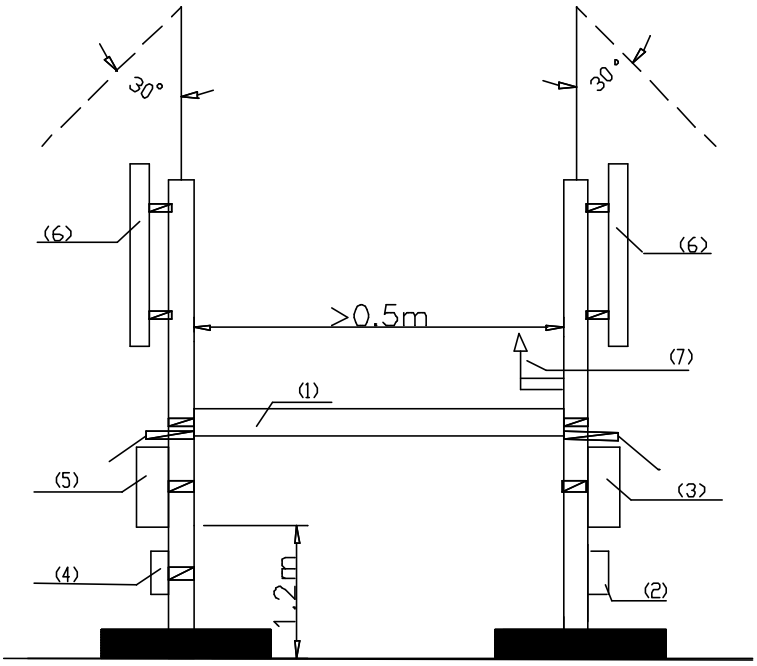

1) Cabling rack for feeder 2) IAFB 3) BTS3601C 4) AC lightning protection box
5) ODU3601C 6) Directional antenna 7) GPS antenna

Figure 2-7 Directional BTS3601C installation on metal masts

IV. Note

- First determine the mast on which the BTS3601C is to be installed during the planning.
- For antenna jumper and feeder routed vertically, bind them on the metal masts with the spacing of 30cm via black cable ties; for antenna feeder routed along the cabling rack, fix them with the spacing of 1m or 2m via feeder clips.
- Power cables from BTS3601C to ODU3601C should be protected by metal tubes, and fibers for cascading by currgated tube. Power cables and fibers routed vertically should be bound on the metal masts via black cable ties, and those routed horizontally should be bound to the cabling rack.
- Power cables should be distributed along the outer side of the cabling rack, and far away from the fibers and feeders.

2.2.5 Example of Tower Installation

This mode is applied to such locations as fields, villages, towns, and roadsides to cover villages, roads, etc. In this mode, the hoisting of BTS3601C is involved.

I. Facility requirements

- The support on which the directional antenna is installed should be extended out of the platform for at least 0.5m. Proper support length of the omni antenna should be determined to meet the requirements for the horizontal diversity distance (over 4.5m) between two antennae.
- The diameter of the holding support on which the antenna is installed should be 60mm~114mm. The length (generally, omni antenna: 1m; directional antenna: 3m) of it should be determined according to the antenna type and sizes.
- A square platform(3m × 3m) should be established 3m above the ground with the bearer capability more than 500kg. And a sun-shading shed should be established 3m above the platform.
- A 2m holding support should be fixed to the tower body vertically above the platform so as to install BTS3601C, IAFB, etc. The number of supports is determined by the number of BTS3601Cs, and the diameter of each support should be 60mm~114mm.

II. Installation layout

Figure 2-8 shows the layout of BTS3601C installation on tower.

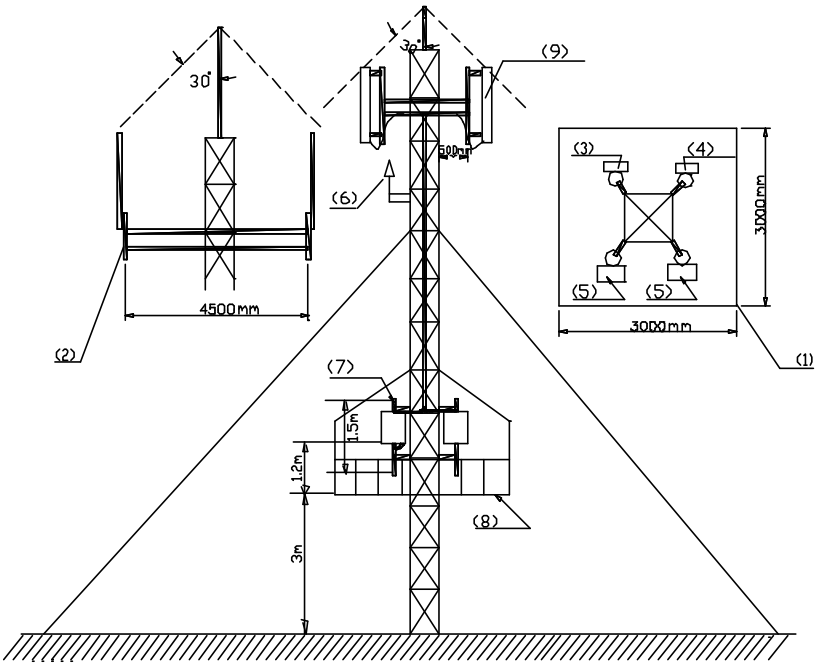

1) Top view	2) Side view	3) Lightning arrester
4) IAFB	5) BTS3601C	6) GPS antenna
7) Holding support	8) Platform	9) Directional antenna

Figure 2-8 Installing BTS3601C on tower

III. Note

- When hoisting the BTS3601C, try to avoid any collision between BTS3601C and the tower.
- Distribute feeders along one side of the tower evenly and tidily. And all feeders should be fixed via feeder dual-clips.
- Install AC lightning protection box and grounding busbar on one support, and the BTS3601C on the other. If the BTS3601C is cascaded with other BTS3601Cs, install them on other supports.
- Install PGND bar on the tower directly. And its location should be close (the PGND cable length should not be more than 1m) to AC lightning protection box. It should have its dedicated grounding downlead (made of 40mm × 4mm hot-gavanlizing flat steel). PGND bar and its downlead should be connected via 35mm^2 yellow-green plastic insulation copper wire or welded directly. Neither the bar nor the downlead should be insulated from the tower body.
- The external shielding layer of BTS3601C coaxial feeder should be grounded on tower top and grounded before the feeder is connected to the BTS3601C. The grounding cable should be connected to the tower body. The grounding cable should be made of yellow-green (or black) plastic insulation copper wire with the core diameter not less than 6mm^2.
- Power cables and signal cables of BTS3601C should not be winded or bound on the tower. They should be cabled as horizontally as possible.

2.3 Installing Major Equipment

2.3.1 Installation Flow

Figure 2-9 shows the flow to install BTS3601C major equipment:

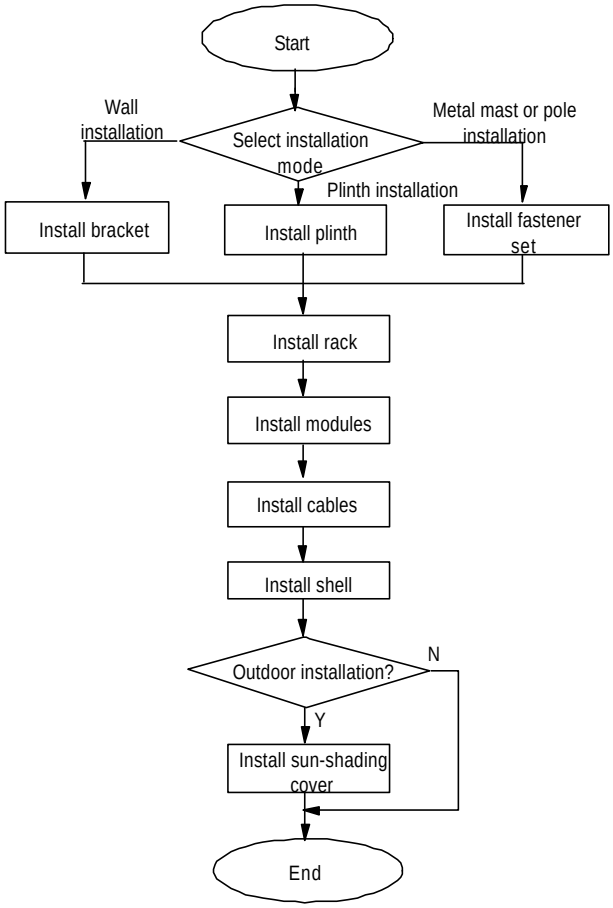

Figure 2-9 BTS3601C major equipment installation flow

In terms of different installation modes of racks, the BTS3601C installation comprises wall installation, plinth installation, and metal mast and concrete pole instllation. Following is to introduce the specific process of the above three modes.

2.3.2 Installing BTS3601C on the Wall

I. Installing bracket

During the installation, a bracket should be installed to secure the BTS3601C onto the wall. Figure 2-10 shows the installation flow:

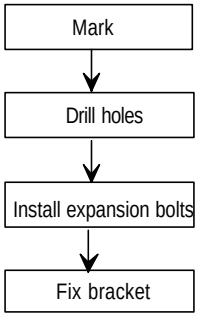

Figure 2-10 Installing the bracket

1) Position and mark the places on the wall to install expansion bolts. Figure 2-11 shows the appearance of an expansion bolt.

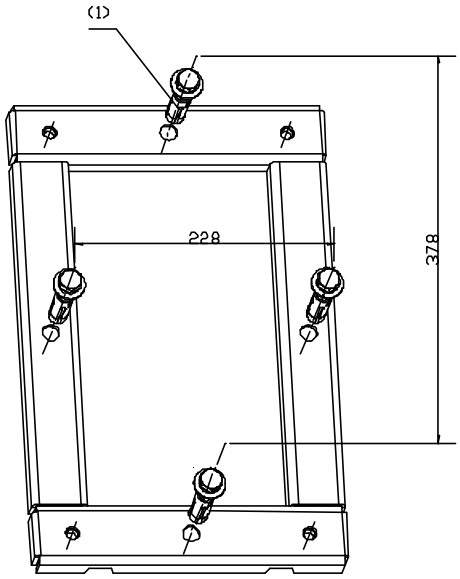

1) M12 expansion bolt

Figure 2-11 Positioning holes

2) Drill holes on the marked places via a percussion drill with the drill bit of ϕ16, the holes should be 52mm~60mm deep and should have the same depth. After the drilling, remove the dust inside and outside the holes with a vacuum cleaner, and then check the distance among holes. Whenever big errors occur, the relevant hole must be positioned and drilled again.

Caution:

1) Hold the drilling bit vertical to the wall during drilling. Hold tight the drillstock with two hands to keep it in the right direction, as vibrations may lead to damaged wall and the hole not straight.
2) The holes should be 52mm~60mm deep and should have the same depth. Otherwise, the expansion bolts can not be secured.
3) If the wall is too hard and smooth to settle the drill bit, punch a pit with a chisel to help positioning the hole.

3) Remove the bolt sleeve and nut and put the sleeve and nut vertically into the hole (before this, the guiding fins should be installed on the slots of the sleeve). Hammer the bolt sleeve until it completely goes into the ground. Figure 2-12 shows the installation of the bolt sleeve and nut.

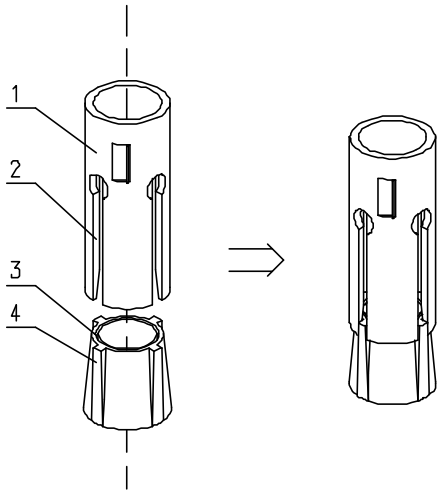

1) Bolt sleeve 2) Guiding slot 3) Nut 4) Guiding fin

Figure 2-12 Installation of the bolt sleeve and nut

Caution:

The guiding fins should be installed on the bolt sleeve first. Otherwise, the expansion bolt can not be properly installed and secured.

4) Put the bracket onto the bolt, and make it droop down naturally. Then mark the places where the rest three bolts are to be inserted.
5) Drill the holes and install the expansion bolts as mentioned above.
6) Align the bracket with four expansion bolts and put the bracket onto the wall. Then in turn put insulation coverings, big plain washers, spring washers ϕ12 and M12

nuts on the four bolts, and tighten all four nuts to a torque of 45 N·m so as to make the expansion bolts expanded and fix the bracket on the wall.

⚠ **Caution:**

Before securing the nuts, put the washers first onto them. The exposed part of the bolt should be about 20mm long.

II. Installing rack

1) Hang the rack onto the bracket, and make the four white washers at the rear of the rack alligned with four installation holes on the bracket, as shwon in Figure 2-13.

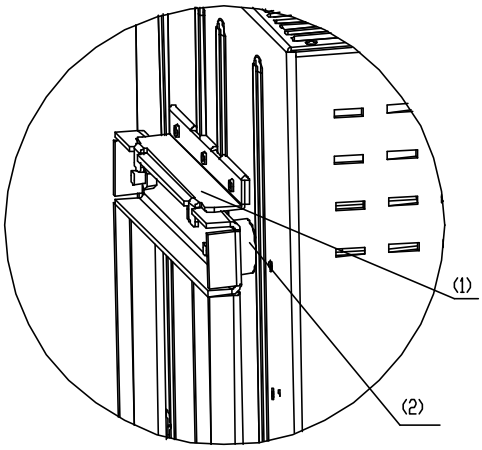

1) Hanger (at the rear of the rack) 2) White washer

Figure 2-13 Installing rack onto bracket

2) Starting from the inside of the rack, secure the two screws at the upper part of the rack, then the two at the lower part, as shown in Figure 2-14.

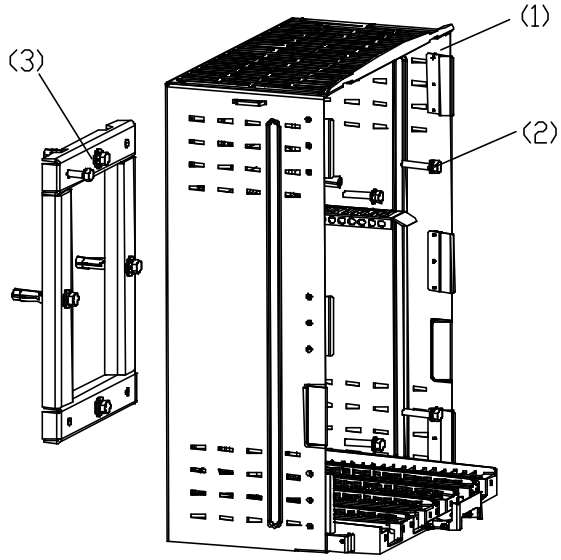

1) Rack 2) M10×45 screw 3) Bracket

Figure 2-14 Installing rack onto wall

⚠ **Caution:**

Check the levelness of the rack after the installation and confirm the result not over 1° so as to ensure the cooling of the MPAM. Otherwise, adjust it till it is OK.

2.3.3 Installing BTS3601C on Plinth

I. Installing plinth

Generally, this mode is applied to the indoor environment.

1) Place the plinth on the floor, and mark the positions of all 4 connection holes of the plinth on the floor.
2) Drill holes using a percussion drill with the drill bit of ϕ16, and begin to install the expansion bolts. The installation of expansion bolts is available in the section "2.3.2 Installing BTS3601C on the Wall".
3) Lift the plinth by two persons, align it with the four expansion bolts and place it onto the floor. Confirm the levelness of the plinth and then in turn put insulation coverings, big plain washers, spring washers ϕ12 and M12 nuts onto the four expansion bolts. Then alternatively fasten the nuts to a torque of 45 N·m so as to make the bolts expanded and secure the plinth, as shown in Figure 2-15.

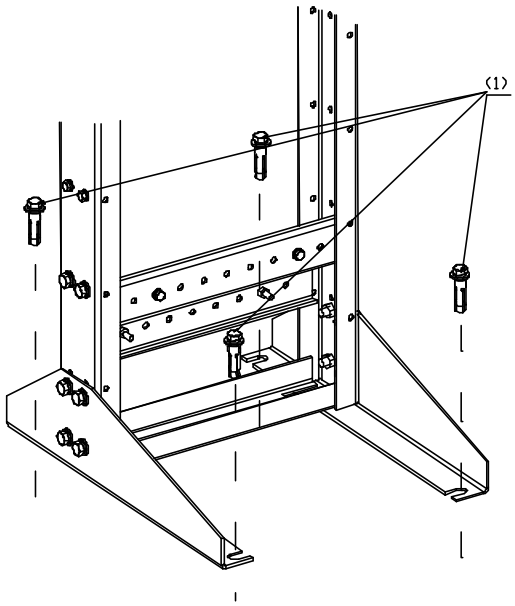

1) M12×60 expansion bolt

Figure 2-15 Fixing the plinth

II. Installing rack

1) Align the four white washers at the rear of the rack with the four installation holes on the plinth, and then place the rack onto the plinth, as shown in Figure 2-16.

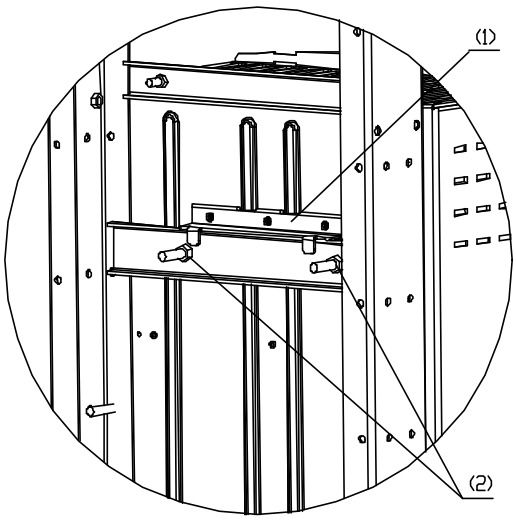

1) Hanger (at the rear of the rack) 2) Installation holes on the plinth

Figure 2-16 Placing rack onto plinth

2) Starting from the inside of the rack, fasten the two screws at the upper part of the rack, then the two at the lower part, as shown in Figure 2-17.

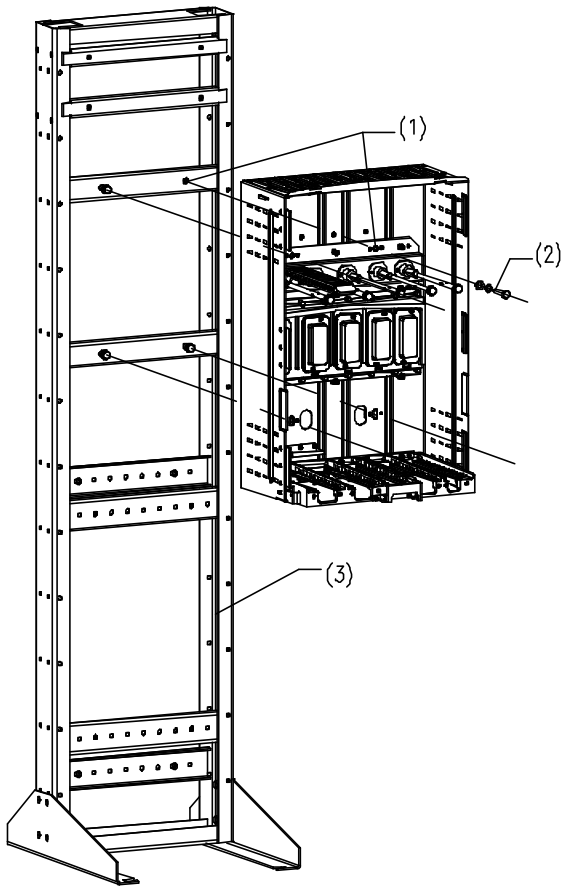

1) Installation hole 2) M10×50 bolt 3) Plinth

Figure 2-17 Securing rack onto plinth

⚠ **Caution:**

Check the levelness of the rack after the installation and confirm the result not over 1° so as to ensure the cooling of the MPAM. Otherwise, adjust it till it is OK.

2.3.4 Installing BTS3601C on Metal Mast and Concrete Pole

I. Installing fastener sets

This installation mode comprises BTS3601C installation on metal masts and poles. To fix the rack onto them, fastener sets should be installed first.

1) Fix the fastener set 1 with M10 bolt onto the upper part of the holding support, then the fastener set 2 onto the lower part of the mast or pole.
2) Adjust the spacing between the center points of two fastener sets to 378mm, as shown in Figure 2-18.

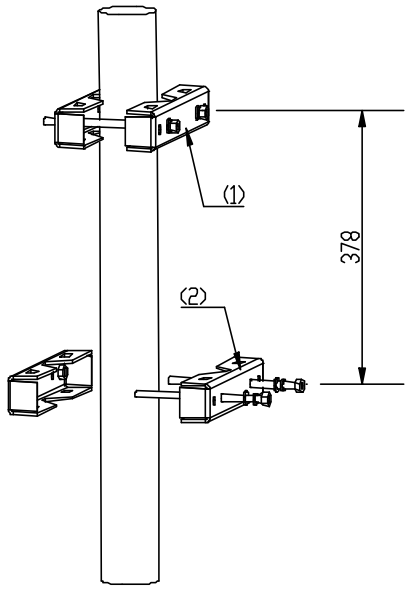

1) Fastener set 1 2) Fastener set 2

Figure 2-18 Installing fastener sets

II. Installing rack

1) Align the four white washers at the rear of the rack with the four installation holes on the fastener sets and then place the rack into the slots of two fastener sets, as shown in Figure 2-19.

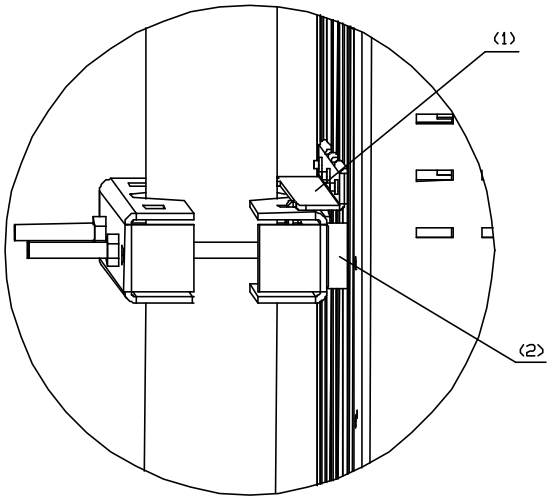

1) Hanger (at the rear of the rack) 2) White washer

Figure 2-19 Fixing rack with fasteners

2) Starting from the inside of the rack, install the two M4×45 screws at the upper part of the rack, then check the correspondence between the two screws (at the lower part) and the fastener set 2. If OK, tighen the screws; otherwise, adjust the position of fastener set 2, as shown in Figure 2-20.

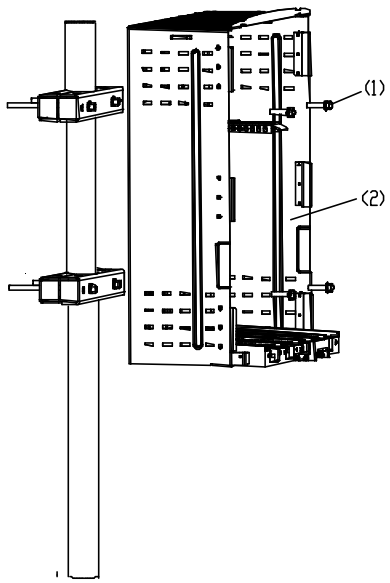

1) M4×45 screw 2) Rack

Figure 2-20 Fixing the rack

⚠ **Caution:**

Check the levelness of the rack after the installation and confirm the result not over 1° so as to ensure the cooling of the MPAM. Otherwise, adjust it till it is OK.

2.3.5 Installing Modules

Modules of BTS3601C are generally installed by the sequence from right to left, i.e. MPAM-MFEM-MTRM-MBPM-MAPM. During the installation, refer to their names on the front of the modules and the corresponding names on the backplane, then insert them into the corresponding slots.

Figure 2-21 shows the installation flow of modules.

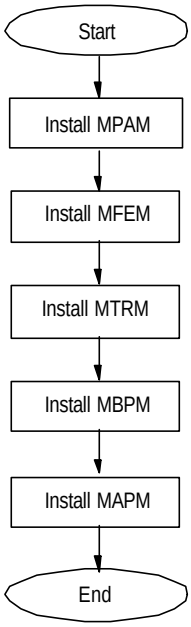

Figure 2-21 Module installation flow

All modules are installed as per the same process. Following is to describe the installation process of the MPAM as an example.

1) Hold the bottom of the MPAM with the left hand, and the handle of the MPAM with the right hand, then insert it into the position along the guide rail.
2) Tighten the M10 bolts at the upper part of the module and the two M6 fixing bolts at the lower part alternatively for module fixation and waterproof, as shown in Figure 2-22.

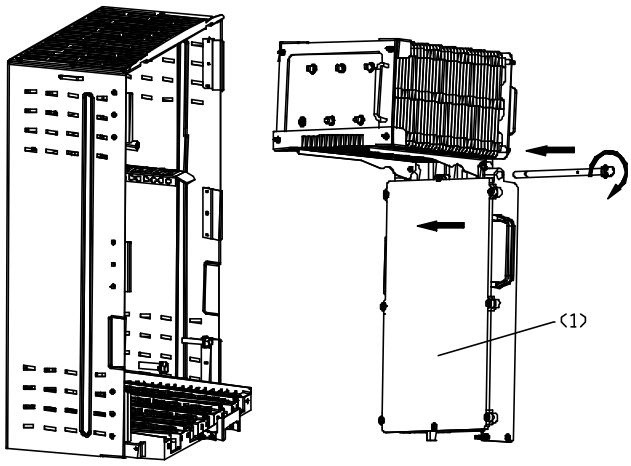

1) MPAM

Figure 2-22 Installing MPAM

Caution:

1) Two persons are required during the installation as heat-pipe radiator has been installed onto the MPAM before delivery and the MPAM is heavy. If the heat-pipe radiator interferes with the support for the radiator on the rack, remove the support first and then install it back to position after the installation.

2) After the installation of the MTRM, check the position of the TRX_ID Dual In-Line Packet (DIP) switch in the maintenance window on the module panel. On the switch, "ON" indicates the low bit, and "OFF" indicates the high bit. To ensure the normal operation of BTS3601C, its three low bits should all be set to "ON(000)".

3) In turn, install MFEM, MTRM, MBPM and MAPM. The procedures are the same as those of MPAM. Figure 2-23 shows the installed modules.

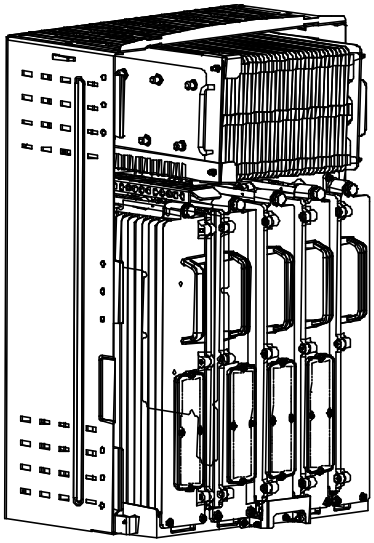

Figure 2-23 Installed modules

2.3.6 Installing Cables

I. Cable types

At the site, such cables should be connected for the BTS3601C as Radio Frequency (RF) jumpers, Frequency Hopping (FH) cables, external cables, fibers, etc. Figure 2-24 shows the entire cable distribution of the BTS3601C.

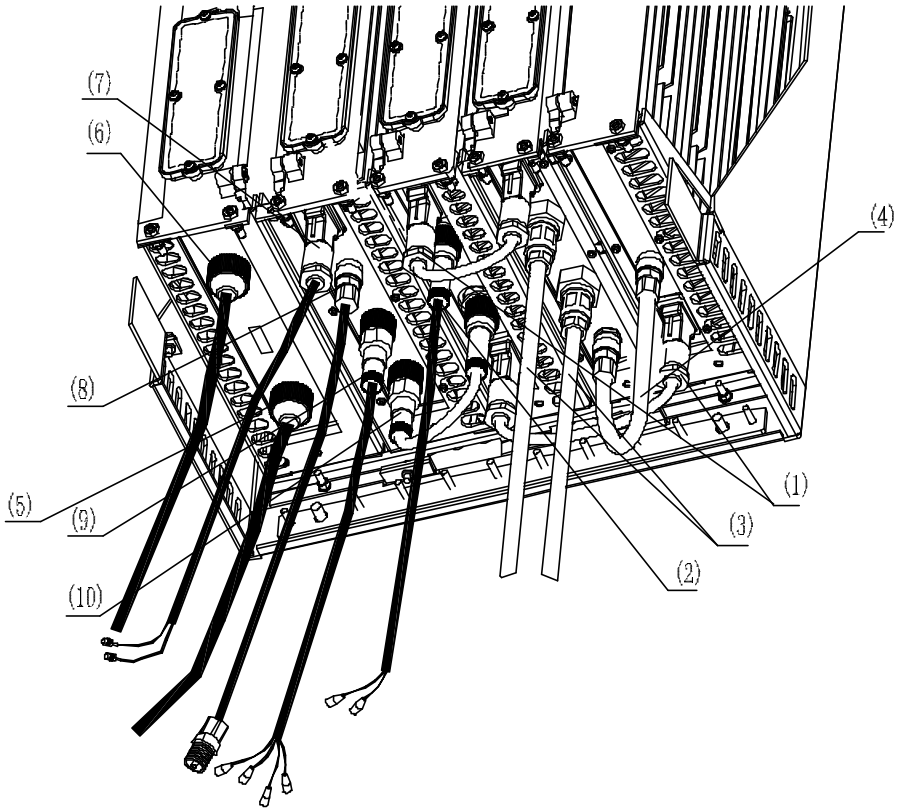

1) Cables connecting Type D connectors between modules
2) MTRM fiber cascading connector
3) Antenna feeder DIN connector connecting to feeder
4) Inter-module cables between Type N male connectors
5) DC input power cable of battery
6) AC power input cable
7) MBPM E1 cable
8) GPS cable (Type N connector)
9) Fiber connector for MBPM optical transmission
10) Fiber connector from MBPM to MTRM

Figure 2-24 BTS3601C cable connection

Following are the details of the cable distribution of modules:

1) Inter-module RF jumpers

- RF jumper (Type D connector) between MTRM and MFEM;
- RF jumper (Type D connector) between MPAM and MTRM;
- RF jumper (Type N connector) between MPAM and MFEM;
- E1 cable (when E1 cable is used for transmission) connecting to MBPM.

2) Fiber

- Fiber cascading connector (waterproof fiber connector) connected with MTRM fiber interface;
- Fiber connector (waterproof fiber connector) between MBPM and MTRM;
- Fiber connector (when fiber isd used for transmission) connecting to MBPM.

3) External cables

- RF jumpers (DIN connector) connecting to the antenna feeder interface of the MFEM;
- RF jumper (Type N connector) connecting to the GPS interface of the MBPM;

- Power cable connecting to MAPM;
- Grounding cable between cabinet and PGND bar.

Figure 2-25 shows the cable distribution at the bottoms of BTS3601C modules.

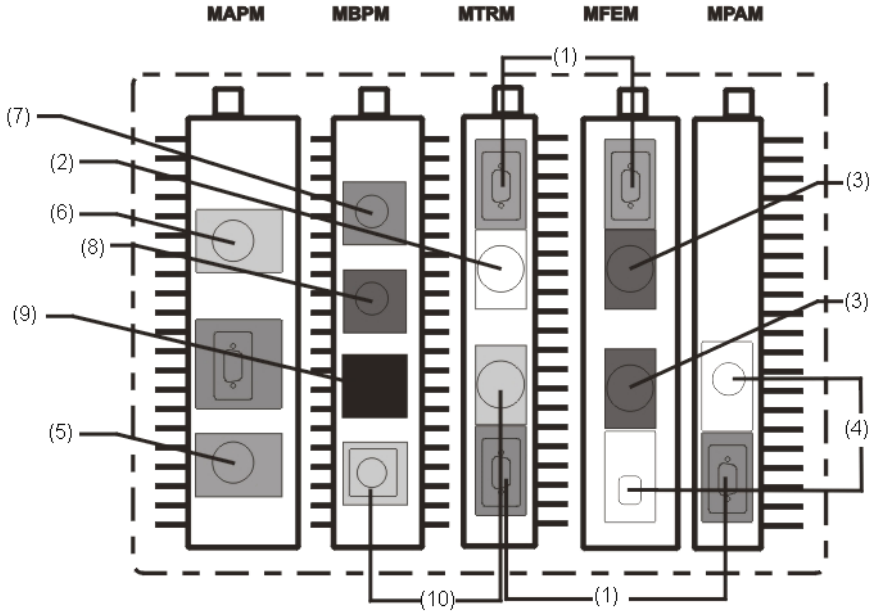

1) Cables connecting Type D connectors between modules.
2) MTRM fiber cascading connector
3) Antenna feeder DIN connector connecting to feeder
4) Inter-module cable between Type N male connectors
5) DC input power cable of battery
6) AC power input cable
7) MBPM E1 cable
8) GPS cable (Type N connector)
9) MBPM optical transmission fiber connector cable
10) Fiber connector connecting MBPM to MTRM

Figure 2-25 Cable distribution at the bottom of BTS3601C

II. Cabling sequence

Waterproof measures and bottom lead-out mode is adopted during the cable distribution of the BTS3601C. And the distribution follows the sequence inside-outside:

1) Connect Type D RF jumper between MPAM and MTRM, and fasten it with straight screwdriver;
2) Connect Type N RF jumper between MPAM and MFEM and make waterproof treatment for the connector via three types of tapes;
3) Connect DIN RF jumper from the antenna and feeder interface of MFEM to the feeder and take waterproof measures for the connector via three types of tapes;
4) Connect Type N RF jumper between MFEM and MPAM and take waterproof measures for the connector via three types of tapes;
5) Connect Type D RF jumpes respectively from MTRM to MFEM and MPAM, then fasten them with straight screwdriver;

6) Connect the fiber between MTRM and MBPM (The silkscreen "UP_FIBER" is made on the fiber interface at the bottom of MTRM). If fiber cascading is necessary, connect the fiber cascading connector to the cascading fiber interface of the MTRM (The silkscreen "DOWN_FIBER" is made on the bottom of the cascading fiber interface);
7) When E1 cable is used for transmission, connect the E1 trunk cable to the E1 interface of MBPM; when fiber is usded for transmission, connect the pigtail of the fiber to the fiber interface of MBPM;
8) Connect GPS cablesd under MBPM and take waterproof measures for the connector via three types of tapes;
9) Connect power cables to MAPM;
10) Connect grounding cables between the cabinet and the PGND bar.

Caution:

If fibers are used for transmission, the optical transmission fiber connector at the bottom of the MBPM should be connected. That is, connect one end of the connector to MBPM and extend four pigtails (marked as WTX, WRX, ETX, and ERX respectively) from the other end. Connect the pigtails "WTX" and "WRX" to the upper-level BTS or BSC, and pigtails "ETX" and "ERX" to the lower-level BTS. Note the marks on the fibers and connect them correctly.

III. Procedures to distribute the waterproof fibers at the bottom of MTRM

During the distribution, be careful not to break the core wire of the fiber connector.

1) Unfix the dustproof cover on the waterproof fiber, and make the dual-LC fiber connector exposed, as shown in Figure 2-26.

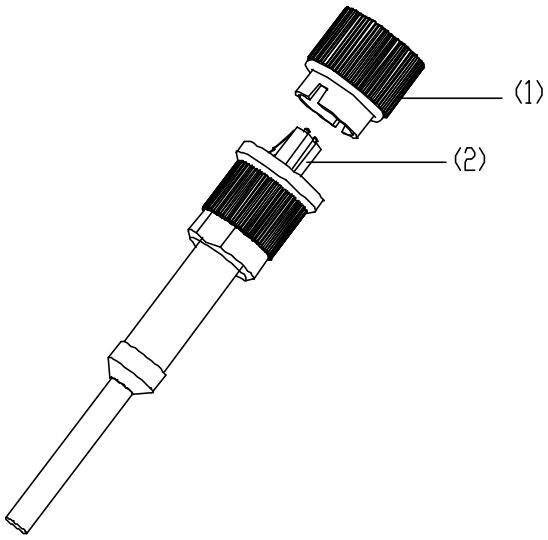

1) Dustproof cover 2) Dual-LC fiber connector

Figure 2-26 Appearance of waterproof fiber (figure 1)

2) Unwrap the limit pivoted arm, as shown in Figure 2-27.

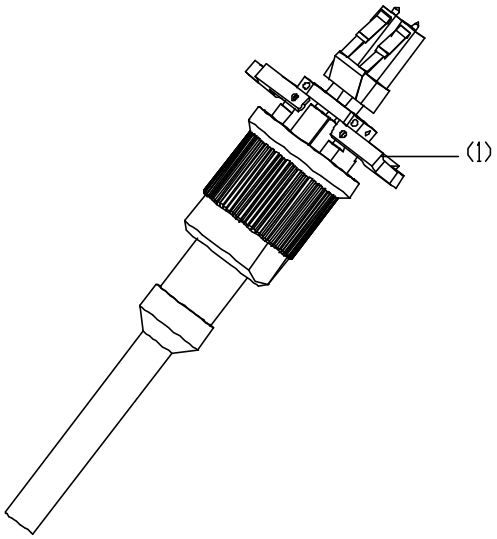

1) Limit pivoted arm

Figure 2-27 Appearance of waterproof fiber (figure 2)

3) Unfix the waterproof cover from the MTRM fiber interface; align the dual-LC fiber connector with the fiber interface. Make the limit pivoted arm correspond to the locating slot of the fiber interface. Then insert the connector into the fiber interface gently until a sound is heard indicating that the connector is in position, as shown in Figure 2-28.

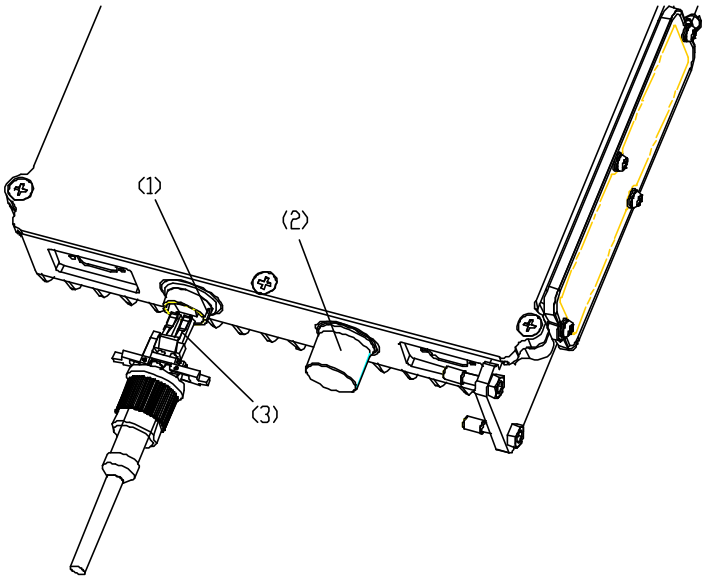

1) Fiber connector locating slot 2) waterproof cover 3) Dual-LC fiber connector

Figure 2-28 Installing waterproof fiber (1)

4) Fix the limit pivoted arm into the corresponding locating slot and tighten the external nut. The installation is then complete. See Figure 2-29.

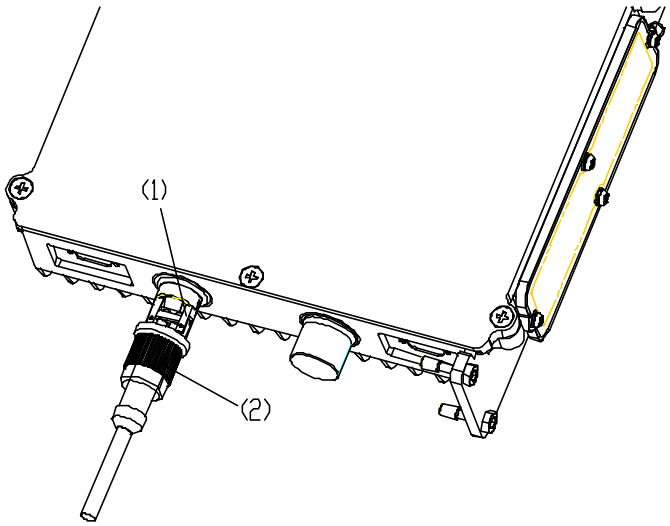

1) Fixing the limit pivoted arm into the locating slot 2) External nut

Figure 2-29 Installing waterproof fiber (2)

IV. Waterproof measures

Except the power cable connectors, fibers and Type D connectors, waterproof measures should be taken for Type N/DIN connectors. Figure 2-30 shows the waterproof sealing tapes.

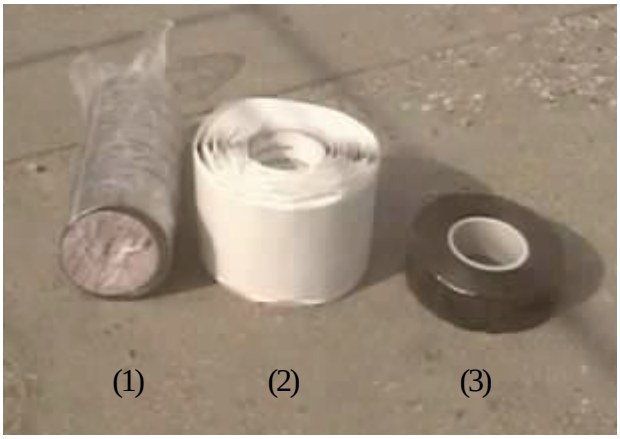

1) Electrical insulation tape 2) Semi-conductive single-coated tape 3) Waterproof tape

Figure 2-30 Waterproof sealing tapes

📖 **Note:**

1) Seal the connector as follows: Wrap it up with semi-conductive single-coated tape, and then with waterproof tape, finally with electrical insulation tape. When wrapping, do it from the bottom up, then from the top to the bottom and finally from the bottom up again. Each turn should be overlapped by the next turn for about one-third of the width.

2) For the convenience of removing in maintenance, it is recommended to wrap first innermost part of the connector with electrical insulation tape, then with semi-conductive single-coated tape.

2.3.7 Installing Shell

During the software installation and system commissioning, it may be required to view the operation status of modules via maintenance window, so the installation of shell should be carried out after the system commissioning.

Procedure is as follows:

1) Align the two hookers at the top of the plastic shell with the two jacks at the top of the back installation plate assembly, then gently push the shell in by pressing the two sides of the shell until the shell completely matches the back shell.
2) Tighten the fixing bolts at the two sides of the back installation plate assembly.

3) Get them locked.

Figure 2-31 shows the whole installation.

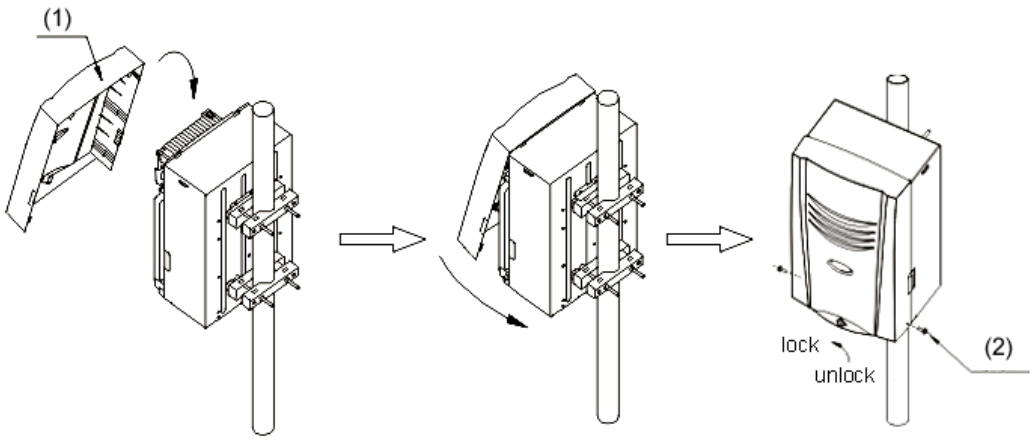

1) Plastic shell 2) Bolt

Figure 2-31 Installing the shell

2.3.8 Installing Sun-shading Cover

If the BTS3601C is located outdoors, the sun-shading cover should be installed. The cover should be installed above the BTS3601C and fixed onto the same metal mast with the BTS3601C via metal holding hoops. The bottom of the cover should be 50~100mm away from the top of the BTS3601C. Method to install the cover is almost the same with that to install the BTS3601C rack onto metal masts. Please refer to contents related.

Note:

Sun-shading cover is optional according to the actual environment of the site.

2.4 Installing Auxiliary Equipment

Auxiliary equipment includes IAFB, AC lightning protection box, the IABB, UPS, etc. In different projects, different auxiliary equipment will be adopted. Following are to introduce the methods to install certain auxiliary equipment first, then the methods to connect their cables in terms of different projects.

2.4.1 Installing IAFB

IAFB provides the BTS3601C with certain auxiliary functions and integrates most of the auxiliary equipment inside a box. Figure 2-32 shows the appearance of an IAFB.

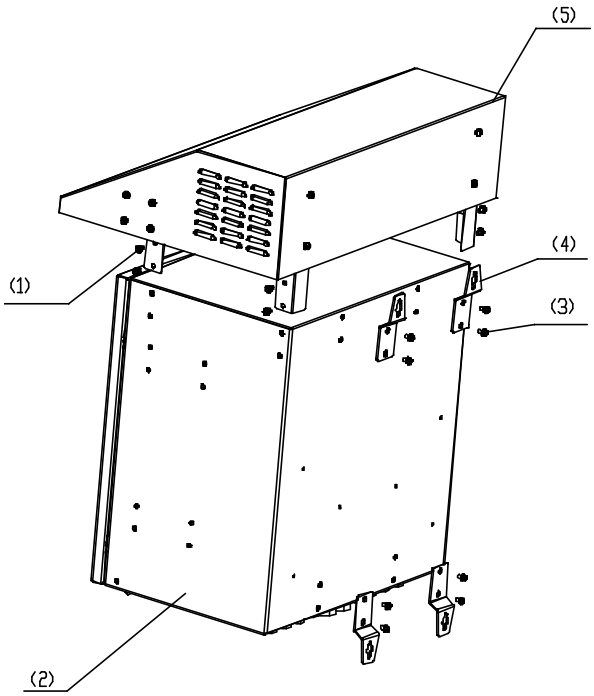

1) M6×12 bolt 2) Box 3) M6×12 bolt 4) Hanger 5) Sun-shading cover

Figure 2-32 IAFB appearance

IAFB comprises two types: One applies to southern environment and the other to northern environment. Table 2-1 shows their respective configurations.

Table 2-1 IAFB description

IAFB type	Configuration	Applicable Scope
One applying to southern environment	AC lightning protection box Power module for transmission Various lightning arresters for transmission Various power distribution terminals and air switches Optical Distribution Frame (ODF) \Digital Distribution Frame (DDF)	Applicable to various envrionment
One applying to northern environment	AC lightning protection box Power module for transmission Various lightning arresters for transmission Various power distribution terminals and air switches ODF\DDF Hot plate	Applicable to cold areas

Three modes are available to install an IAFB, namely, intalling it on walls, metal masts (with the diameter ϕ60~ϕ114) or poles (with the diameter ϕ150~ϕ350). The detailed installation procedures are available in Appendix A.

2.4.2 Installing AC Lightning Protection Box

Note:

In terms of its discharging currents, the AC lightning protection box can be classified into three types: 20kA, 40kA and 100kA. All boxes mentioned in this chapter are of 20kA.

I. Structure

AC lightning protection box prevents the AC input power supply from lightning strikes. Its appearance is shown in Figure 2-33.

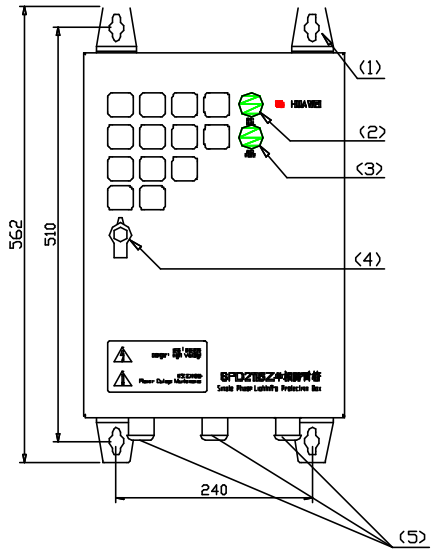

1) Hanger 2) RUN indicator 1 3) RUN indicator 2
4) Door lock 5) Cabling hole

Figure 2-33 AC lightning protection box appearance

There are two indicators on the door of the box. The significance of two indicators depends on the positions of the air switch inside the box. If the switch is off, the indicators run normally. Otherwise, the indicators will be both off, and the lightning protection box will be invalid. Table 2-2 shows the meanings of indicator statuses.

Table 2-2 Meanings of AC lightning protection box indicators

RUN indicator status	Meaning
RUN indicator 1: On; RUN indicator 2: On.	Lightning protection function normal
RUN indicator1: Off; RUN indicator2: On	C-level lightning protection function disabled
RUN indicator 1: On; RUN indicator 2: Off	D-level lightning protection function disabled
RUN indicator 1: Off; RUN indicator 2: Off	Lightning protection function disabled (except for the interruption of external power supply)

Caution:

If either of the two RUN indicators is off, it indicates that the lightning protection box runs abnormally. Please contact Huawei engineers at once. Otherwise the related equipment may suffer from lightning strikes.

II. Method

Three modes are available to install an IAFB, namely, intalling it on walls, metal masts (with the diameter ϕ60~ϕ114) or poles (with the diameter ϕ150~ϕ350).

III. Installation flow

Figure 2-34 shows the installation flow of AC lightning protection box.

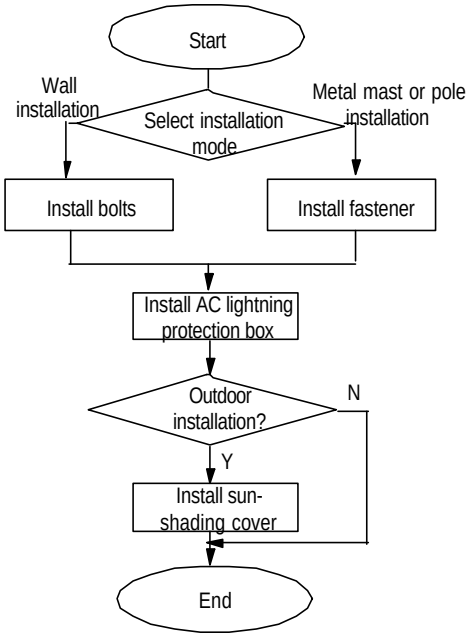

Figure 2-34 Installation flow of AC lightning protection box

IV. Procedures

Installing the box on wall

1) Put the lightning protection box against the wall and mark the positions where the four expansion bolts are to be installed. The sizes of holes for expansion bolts are shown in Figure 2-33.
2) Drll holes with a percussion drill (drill bit ϕ10) at the marked position on the wall. After the drilling, remove the dust inside and outside the holes with a vacuum cleaner, and then check the distance among the holes. Whenever big errors occur, the relevant hole must be relocated and drilled again.

⚠ **Caution:**

1) Hold the drilling bit vertical to the wall during drilling. Hold tight the drillstock with two hands to keep it in the right direction, as vibrations may lead to damaged wall and the hole not straight.
2) The hole depth should be the length of the expansion bolt sleeve plus the drill bit. The hole depths of respective holes should be consistent. Before measuring the hole depth, remove the dust inside the hole and measure the hole depth. Remove the dust with a vacuum cleaner before drilling.
3) If the wall is too hard and smooth to settle the drill bit, punch a pit with a chisel to help positioning the hole.

---

3) Unfix the washer and nut from the expansion M8×80 bolt, put the expansion bolt and the expansion sleeve vertically into the hole and strike the bolt with a rubber hammer until the expansion sleeve is completely driven in the hole.
4) Pull the four expansion bolts through the four hangers of the box.
5) Put the plain washers, spring washers, and nuts onto the exapnsion bolts, revise the location of the box, and tighten the nuts to a torque of 13.4 N·m. Figure 2-35 shows the whole process.

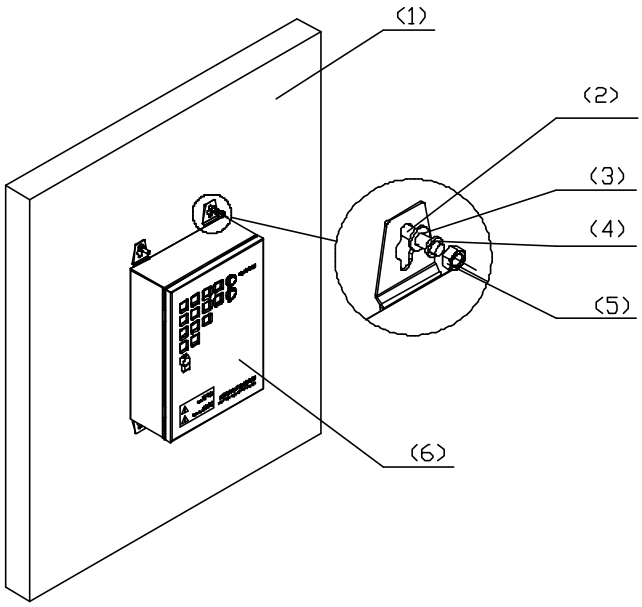

1) Wall
2) M8×80 expansion bolt
3) Plain washer 8
4) Spring washer 8
5) Nut M8
6) AC lightning protection box

Figure 2-35 Fixing AC lightning protection box (on wall)

6) If a sun-shading cover (applicable to outdoor AC lightning protection box) is necessary, please align the installation holes of the cover with the upper two expansion bolts, then in turn put plain washers, spring washers and nuts onto the expansion bolts, and then revise the location of the box, finally, tighten the nuts to a torque of 13.4 N·m. Figure 2-36 shows the process.

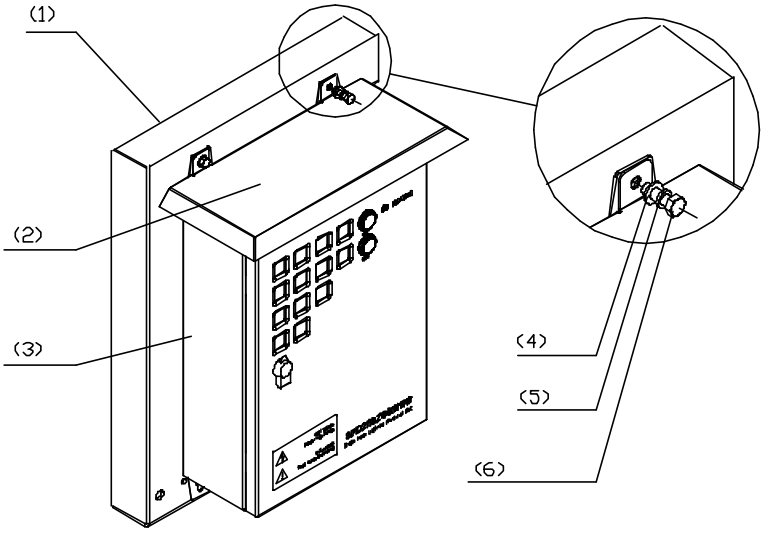

1) Wall 2) Sun-shading cover 3) AC lightning protection box
4) Plain washer 8 5) Spring washer 6) Nut M8

Figure 2-36 Installing sun-shading cover for AC lightning protection box

Installing the box on metal mast:

1) Fix the AC lightning protection box, sun-shading cover, and beam together with M8×25 expansion bolts, spring washers, and plain washers, as shown in Figure 2-37.

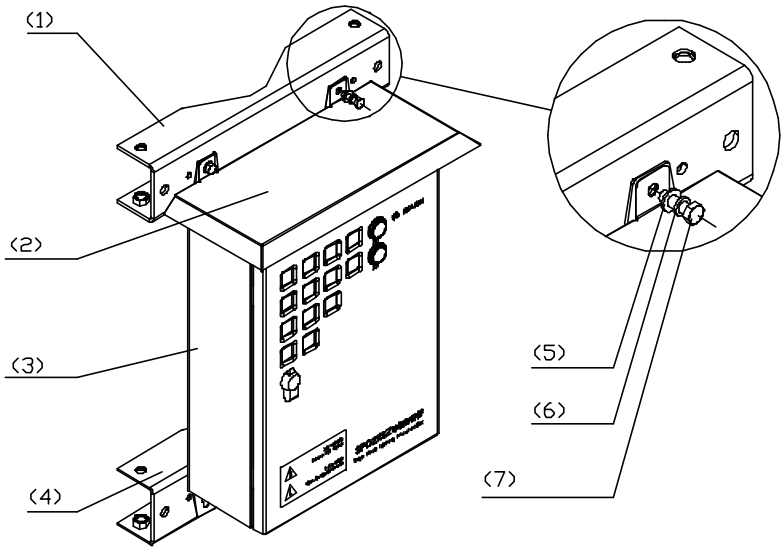

1) Beam 2) Sun-shading cover 3) AC lightning protection box 4) Beam
5) Plain washer 8 6) Spring washer 7) M8×25 expansion bolt

Figure 2-37 Fixing the box on beams

2) Put the fixed beam and the box against the metal mast, intall the fasteners and place the mast on the middle of the beam and the fastener. Then pull the M10 bolt

througth the beam and the fastener, put plain washers, spring washers and nuts onto the bolt and tighten the nut to a torque of 26.5 N·m with a spanner. The process is shown in Figure 2-38.

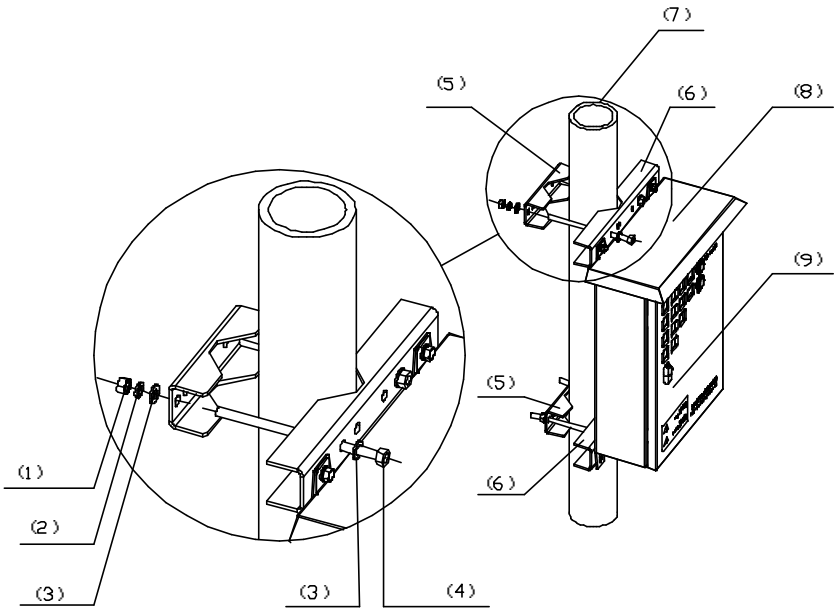

1) Nut M10
2) Spring washer 10
3) Plain washer 10
4) M10 bolt
5) Fastener
6) Beam
7) Metal mast
8) Sun-shading cover
9) AC lightning protection box

Figure 2-38 Fixing AC lightning protection box (on metal masts)

Installing the box on pole

1) Fix the box, flashing board and the beam together with M8×25 bolts, spring washers, plain washers, as shown in Figure 2-37.
2) Place the fixed beam and the box together against the pole. At the other side of the pole, install another beam and get the pole at the middle between two beams. Then pull the M12 bolts through the two beams, put plain washers, spring washers and nuts onto the bolts, and tighten the nuts to a torque of 45 N·m with a spanner, as shown in Figure 2-39. If the pole is a little bit thin, cut the exposed bolts to keep the length of the exposed part about 20mm.

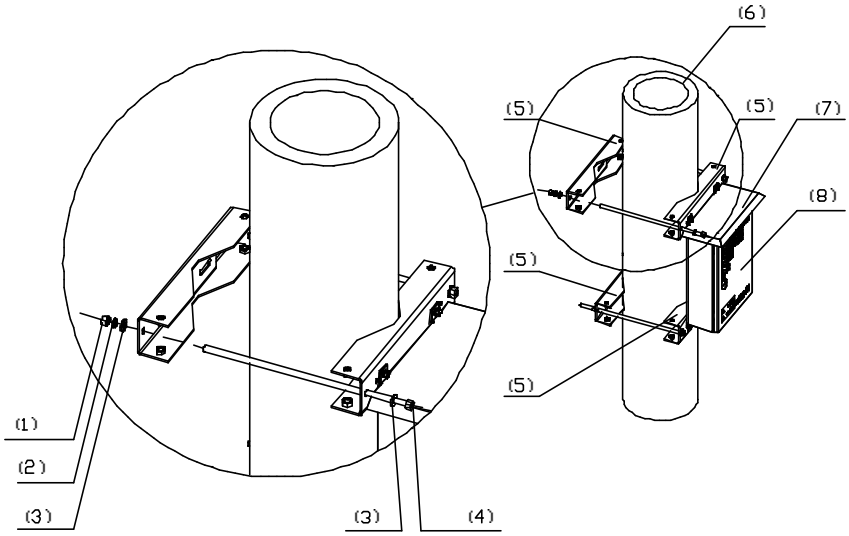

1) Nut M12 2) Spring washer 12 3) Plain washer 12 4) M12 bolt
5) Beam 6) Pole 7) Sun-shading cover 8) AC lightning protection box

Figure 2-39 Fixing AC lightning protection box (on pole)

2.4.3 Installing UPS

Generally, there are four modes to install a UPS, i.e. on ground base, wall, metal mast (with the diameter of ϕ60~ϕ114) or pole (with the diameter of ϕ150~ϕ350).

The detailed installation method of UPS is available in the installation guide of the UPS supplier.

2.4.4 Installing IABB

I. Structure

The box provents the backup battery groups of BTS3601C from being damaged so as to provide the BTS3601C with backup power. Its structure is similar to that of BTS3601C and IAFB.

Inside the box, 6 batteries can be installed. When the box is used independently, only two batteries are used generally. When the box works together with the UPS, the 6 batteries of it are used. Following are the technical items of the battery:

- Voltage rating of a battery is 12V. When 6 batteries are in series, the voltage rating is 72V.
- Capacity rating: 26Ah.
- Work temperature: -15°C~+45°C

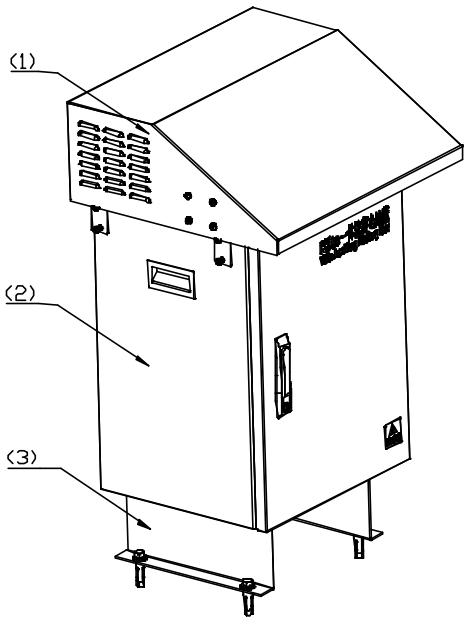

1) Sun-shading cover 2) Box 3) Support

Figure 2-40 IABB appearance

II. Method

The box can be installed on the concrete floor or metal platform, instead of on holding support or wall.

III. Installation flow

Figure 2-41 shows the installation flow of the IABB.

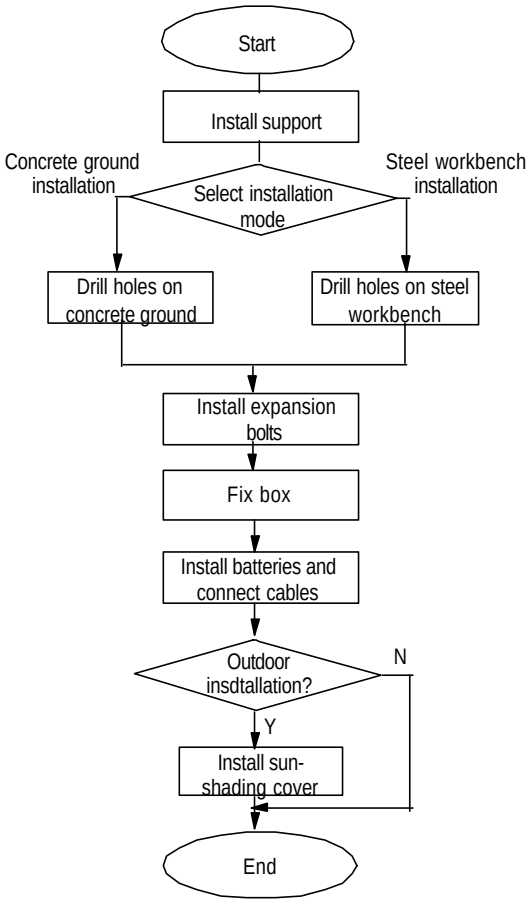

Figure 2-41 Installation flow of the IABB

IV. Procedures

Installing the box on concrete floor:

1) Install the fixing support onto the battery box via 4 M12×20 assembling bolts, as shown in Figure 2-42.

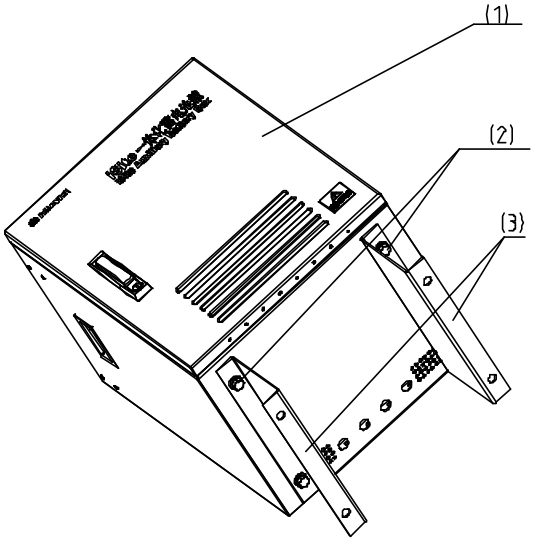

1) Box 2) M12×20 bolt, spring washer, plain washer 3) Fixing support

Figure 2-42 Installing the fixing support

2) Place the box onto the floor and mark the places on the floor where all 4 connection holes on the support are located.
3) Drill holes on the floor via a percussion drill with the drill bit of ϕ16. After the drilling, remove the dust inside and outside the holes with a vacuum cleaner, and then check the distance among the holes. Whenever big errors occur, the relevant holes must be relocated and drilled again.

⚠ **Caution:**

1) Hold the drilling bit vertical to the floor during drilling. Hold tight the drillstock with two hands to keep it in the right direction, as vibrations may lead to damaged floor and the hole not straight.
2) The hole depth should be the length of the expansion bolt sleeve plus the drill bit. The hole depths of respective holes should be consistent. Before measuring the hole depth, remove the dust inside the hole and measure the hole depth. Remove the dust with a vacuum cleaner before drilling.
3) If the floor is too hard and smooth to settle the drill bit, punch a pit with a chisel to help positioning the hole.

---

4) Unfix the spring washer, nut and plain washer. Put the expansion bolt into the hole and knock directly on the bolt with a hammer (such as nail hammer) until the bolt is completely driven into the floor. Then, put the nut on the bolt and tighten it until the bolt is expanded slightly so as to avoid it getting loose.

Caution:

The proper length of the hole should be 55mm~65mm. Otherwise, the expansion bolt cannot be completely driven into the hole, which affects the reliability of the box.

5) Put in turn spring washers, and plain washers onto 4 M12×60 bolts, and pull 4 bolts through the holes at the bottom of the support, then put expansion sleeves and nuts onto the bolts. And then put the bolts into the holes made on the concrete floor and tighten the bolts with a spanner, as shown in Figure 2-43. Therefore, the box is secured on the floor.

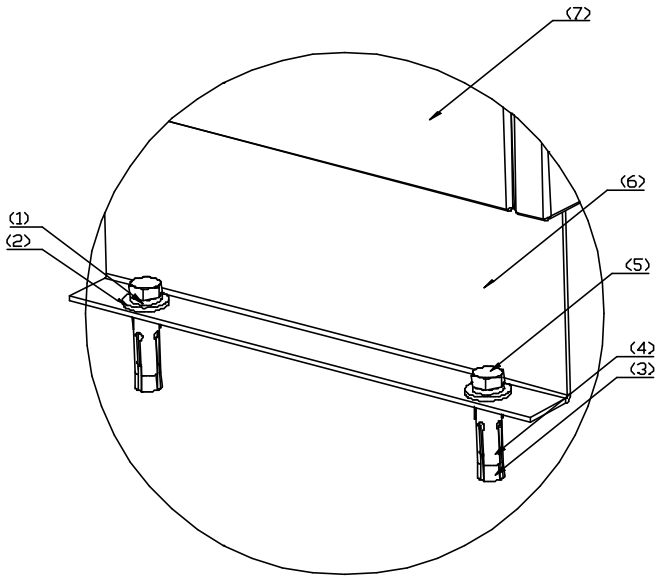

1) Spring washer 2) Plain washer 3) Expansion bolt 4) Expansion sleeve
5) Bolt 6) Support 7) Box

Figure 2-43 Fixing the box onto the concrete floor

6) Open the door of the box and place the batteries into the box. The box comprises three layers, each of which can hold two batteries.
7) Connect 6 batteries in series via the cables delivered with the box, as shown in Figure 2-44.

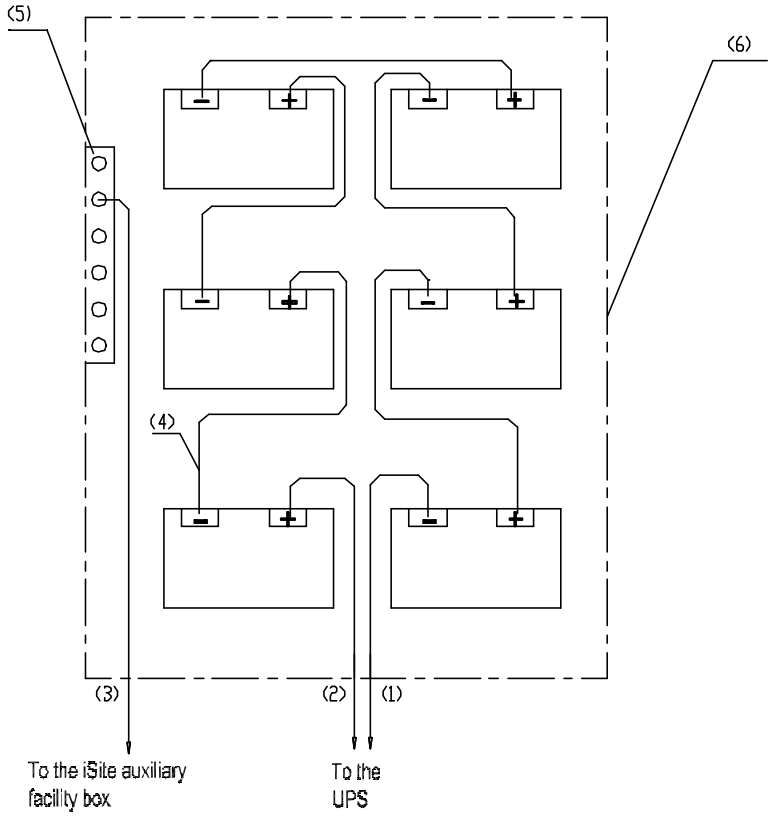

1) UPS with power cable (negative cable) 2) UPS with power cable (positive) 3) Grounding cable
4) Battery cable 5) PGND bar in the battery box 6) Battery box

Figure 2-44 Connecting UPS to the IABB

8) Check whether the voltage of battery groups are over 72V with a multimeter. If Yes, it indicates the installation is OK. Otherwise, errors exist in the installation. Check the polarities of the batteries and make sure they are OK. If the errors still cannot be located and the voltage is lower than 72V, it indicates errors exist in the battery cables or batteries themselves. Please contact Huawei engineers.

Note:

When the IABB is used without being connected to a UPS, only two batteries are used generally. The corresponding internal connection is shown in Figure 2-45. After the connection, it is still required to check the voltage (24V or not) of the battery group via a multimeter, so as to ensure the connection is correct.

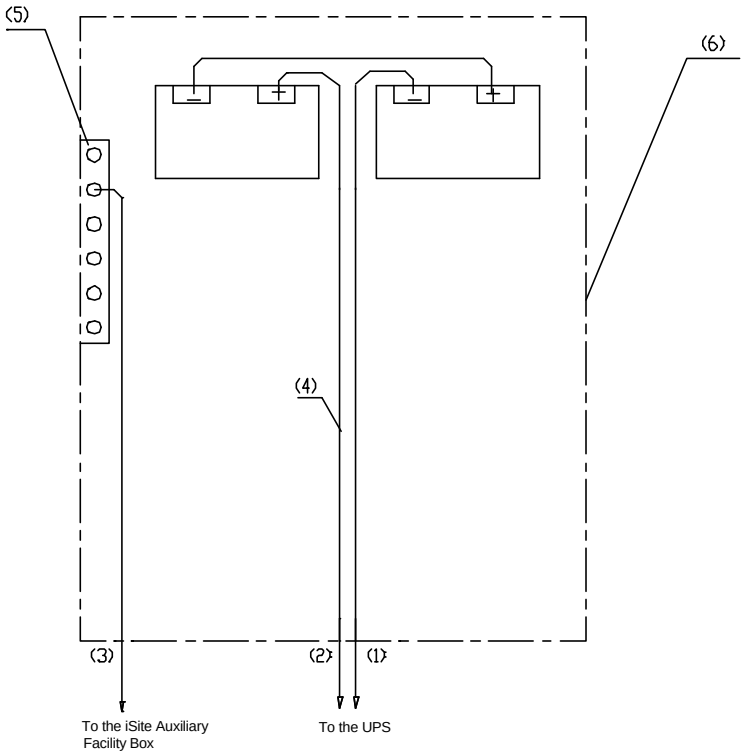

1) UPS with power cable (negative cable) 2) UPS with power cable (positive cable) 3) Grounding cable
4) Battery cable 5) PGND bar in the battery box 6) Battery box

Figure 2-45 Internal connection of the IABB (without UPS)

9) Secure the support of the sun-shading cover with M6×12 assembling bolts, as shown in Figure 2-46.

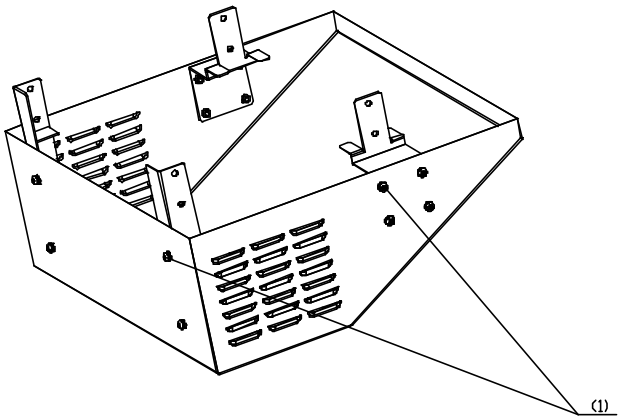

1) M6×12 assembling bolt

Figure 2-46 Installing sun-shading cover

10) Install the sun-shading cover onto the box, as shown in Figure 2-47.

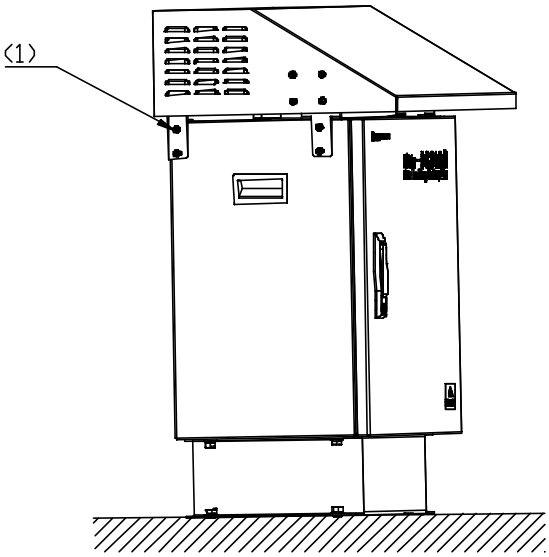

1) M6×12 assembling bolt

Figure 2-47 Fixing the sun-shading cover

Installing the box on steel platform:

Note:

Procedure to install the box on steel platform is similar to that on concrete floor.

---

1) Install the fixing support onto the battery box via 4 M12×20 assembling bolts, as shown in Figure 2-42.
2) Place the box on the platform and mark positions on the platform for all 4 connection holes in the fixing support.
3) Drill holes using a percussion drill with the bit of ϕ16. After the drilling, remove the dust inside and outside the holes with a vacuum cleaner, and then check the distance among holes. Whenever big errors occur, the relevant holes must be relocated and drilled again.

Caution:

1) Hold the drilling bit vertical to the platform during drilling. Hold tight the drillstock with two hands to keep it in the right direction, as vibrations may lead to damaged platform and the hole not straight.
2) The hole depth should be the length of the expansion bolt sleeve plus the drill bit. The hole depths of respective holes should be consistent. Before measuring the hole depth, remove the dust inside the hole and measure the hole depth. Remove the dust with a vacuum cleaner before drilling.
3) If the platform is too hard and smooth to settle the drill bit, punch a pit with a chisel to help positioning the hole.

4) Unfix the spring washer, nut and plain washer. Put the expansion bolt into the hole and knock directly on the bolt with a hammer (such as nail hammer) until the bolt is completely driven into the hole. Then, put the nut on the bolt and tighten it until the bolt is expanded slightly so as to avoid it getting loose.

Caution:

The hole depth should be big enough (55mm~65mm); otherwise, the expansion bolts cannot be completely driven into the holes, which may affect the reliability of the box.

5) Put in turn spring washers and plain washers onto the 4 M12×60 bolts, and pull the bolts through the holes at the bottom of the support then through the holes made at the bottom of the platform. Put washers and nuts onto the bolt, and tighten the nuts reliably with a spanner.
6) Method to install the sun-shading cover is the same as that mentioned in "Installing the box on concrete floor".

2.5 Installing Cables

During the installation of BTS3601C major equipment, the cables (excluding feeders) at the BTS3601C side have been distributed. Following is to introduce the cable connections between major equipment and auxiliary equipment, and those among auxiliary equipment in terms of varied networking modes. The installation of feeders is covered in Chapter 3.

2.5.1 Cable Connection Requirements

I. For trunk cables

1) Gists for indoor installation

- Trunk cables should not be cross-connected with power cable and RF jumper.
- When trunk cables are distributed along iron objects and poles, they must be protected by currgated cabling trough. The trough should be secured onto the wall with wall fixing clips. And the cables should be distributed horizontally and straight. If the turns of cables are unavoidable, the minimum angles at the turns should not be smaller than 120°.

2) Trunk cables must be labeled after connection. The label appearance and filling format is shown in Figure 2-48. Please strictly follow the format for the convenience of future maintenance.

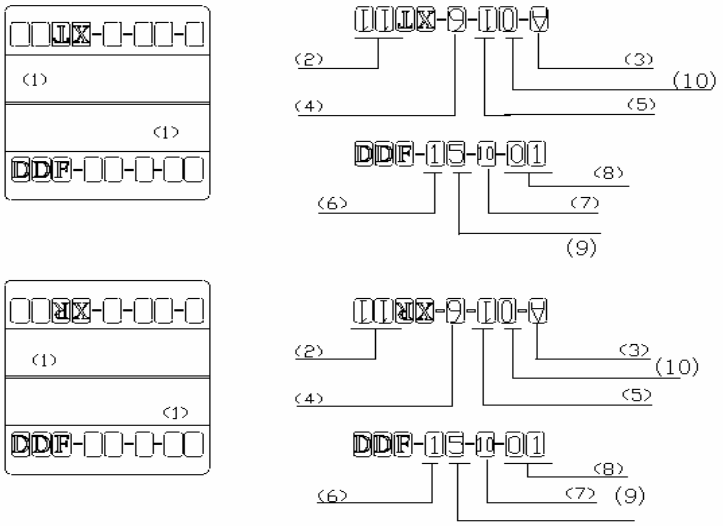

1) Trunk cable label	2) E1 No.	3) Row No.	4) Slot No. (0~1)
5) Subrack No.	6) Row No.	7) Line No.	8) E1 No. (on DDF)
9) Column No.	10) Column No.		

Figure 2-48 Appearance and filling format for 75Ω trunk cable labels

3) Gists for outdoor installation

- If the transmission equipment is located on the same platform with the BTS3601C, transmission cables must be protected by currgated tubes, which should be fixed with black ties. And cables should be distributed horizontally and straight, and smoothly via circular arcs at the turns.
- If transmission equipment does not share the same platform with the BTS3601C, the transmission cable between them need to be distributed in air. So double shielded cable should be adopted with both ends of the external cable grounded and connected to the grounding cable at the BTS3601C side, then to the

grounding busbar. If no double shielded cable is avaialble, the transmission cables must wear the 50m-long metal tubes. And both ends of the tube should be grounded.

- Trunk cable should be labeled after the distribution.

II. For power cables

1) Gists for indoor installation

- Power cables should not be cross-connected or in parallel with signal cables.
- Cables distributed on the wall must be protected by PVC cabling trough, which should be fixed on the wall with wall fixing clips. And cables should be distributed horizontally and straight. Even if turns are unavoidable, the minimum angle at each turn should not be smaller than 120°.
- Power cables should be labeled after the connection. Figure 2-49 shows the appearance of a power cable label.

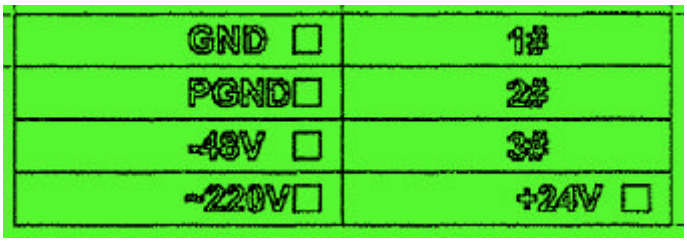

Figure 2-49 Power cable label appearance

2) Gists for outdoor installation

- It is strongly prohibited to tie AC power cable on the iron objects and then lead it into BTS3601C. Instead, the cable should be first connected to porcelain insulator, then to BTS3601C.
- Power cables distributed along the iron object and pole must be protected by currgated tubes, as well as the transmission cables. The tubes should be fixed with black ties. Cables should be distributed as horizontally and straight as possible. If turns of cables are unavoidable, the turns should be be made smoothly via circular arcs.

III. For grounding cables

As the requirements for grounding cable connections are comparatively complicated. Following is to describe them in terms of varied installation modes.

1) Installing BTS3601C on tower

- The grounding of BTS3601C system and tower lightning protection system must share the same grounding body.
- When the BTS3601C is close to the transformer for power distribution (straight distance less than 30m), the counterpoise of the BTS3601C system should be connected to that of the transformer and form a unified counterpoise.

- When an independent grounding busbar is adopted for the BTS3601C, it should be installed on the tower directly without any insulation processing. The grounding busbar of the BTS3601C should have the dedicated grounding downlead made of 40×4mm hot-gavanlizing flat steel. The PGND bar should be connected or welded to the grounding downlead via 35mm^2 yellow-green plastic insulation copper core wire. The downlead should not be insulated from the tower body.

2) Installing BTS3601C on poles

- The PGND of BTS3601C system should share the same grounding body with the lightning protection grounding of poles.
- When the BTS3601C is close to the transformer for power distribution (straight distance less than 30m), the counterpoise of the BTS3601C system should be connected to that of the transformer so as to form a unified counterpoise.
- The overlapped parts of the metal fixing beam (between the two poles) and the downlead of the lightning arrester should be soldered together reliably. Various equipment is installed on the metal holding support between fixing beams (the support is soldered on the beams). The mechnical parts of all equipment should contact the metal holding support directly without any insulation processing. Full-length welding should be adopted here, instead of dot welding, as the latter is unreliable.
- The overlapped parts between the metal fixing parts of the platform and the downleads of the two lightning arresters should be reliably welded together. Or, instead, a 40×4mm hot-galvanizing flat steel should be installed on the platform. The two ends of the steel should be welded to the bench and the middle part of the steel to the downleads of arresters. If the platform and the downleads of arresters have not be welded together when the concrete pole is set up, connect them via 35mm^2 yellow-green protection grounding cable and the grounding clip that connects the flat steel to the OT. Full-length welding should be adopted here, instead of dot welding, as the latter is unreliable.
- Cabling ladder should be installed and fixed via metal fixing beam between two poles for antenna feeders. Good electric connection should be achieved between the cabling ladder and the fixing beam. Meanwhile, the overlapped parts of the fixing beam and the downlead of the lightning arrester should be welded together.
- BTS3601C grounding busbar should be installed directly on metal holding support or platform without any insulation processing. A dedicated grounding downlead (made of 40×4mm hot-galvanizing flat steel) should be prepared for the grounding busbar. BTS3601C grounding busbar should be connected to the grounding downlead via 35mm^2 yellow-green plastic insulation copper wire or be welded with it. And the downlead should not be insulated from various metal parts between the two poles.
- Installing BTS3601C on metal mast of building-top
- The PGND of BTS3601C system should share the same grounding body with the lightning protection grounding of the metal mast on building-top.

- If the building containing the BTS3601C is close (straight distance less than 30m) to the transformer for power distribution, the counterpoise of the building should be connected to that of the transformer and form a unified counterpoise.
- BTS3601C grounding busbar should be installed together with the BTS3601C directly on the metal mast without any insulation processing. At the same time, a grounding cable should be led from the metal mast to the BTS3601C grounding busbar, be fixed via bolts or be welded onto the metal mast. It should be made of yellow-green plastic insulation copper wire with the core diameter not less than 16mm^2. Or, instead, a piece of 40×4mm hot-galvanizing flat steel should be welded onto the mast and the wire hole should be reserved on the other end of the steel, so as to connect grounding cable to the BTS3601C grounding busbar.
- If grounding bar or grounding point is available in the building-top or inside the building (e.g. the PGND bar of the communication euipment room), the downlead of the BTS3601C grounding busbar should be connected directly to the grounding bar available on building-top or inside the building. The grounding downlead should be made of yellow-green plastic insulation copper wire with the core diameter not less than 35mm^2.
- If no grounding point is available inside the building, the downlead of the BTS3601C grounding busbar should be led down to the building bottom and connected to the counterpoise of the building. The downlead should be made of 40×4mm hot-galvanizing flat steel or yellow-green plastic insulation copper wire with the core diameter not less than 35mm^2.

3) Installing BTS3601C indoors

- If the equipment room is close (straight distance less than 30m) to the transformer for power distribution, the counterpoise of the equipment room should be connected to that of the transformer so as to form a unified counterpoise.
- If PGND bar is available inside the equipment room, the grounding busbar of the BTS3601C system should be connected via PGND cable to the grounding bar of the equipment room directly. The grounding cable should be made of 35mm^2 yellow-green plastic insulation copper wire.
- If PGND bar is available in other rooms (e.g. communication equipment room in the building) instead of the equipment room, the downlead of the BTS3601C grounding busbar should be connected to the grounding bar in such room. The grounding downlead should be made of yellow-green plastic insulation copper wire with the core diameter not less than 35mm^2. If no groundign point is available in the whole building, the downlead may be led down to the bottom of the building then to the counterpoise of the building. The grounding downlead should be made of yellow-green plastic insulation copper wire with the core diameter not less than 35mm^2.

2.5.2 Networking of AC Lightning Protection Box

I. Plan without the IABB

Figure 2-50 shows the connection between the BTS3601C and an independent AC lightning protection box.

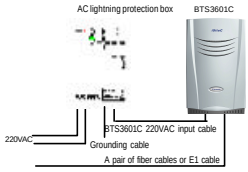

Figure 2-50 Networking of AC lightning protection box (20kA, without the IABB)

Note:

In terms of its discharging currents, the AC lightning protection box can be classified into three types: 20kA, 40kA and 100kA. All boxes mentioned in the chapter are of 20kA.

Three cables are used for the external connection of the AC lightning protection box:

1) External power supply input cable

It is a twin-core cable (L, N). When AC power is led into the box via this cable, the live wire is connected to the "L" end and the neutral wire to the "N" end.

The cable is provided by user and the ends of the cable can be distinguished via a multimeter, i.e. the one with lower voltage is "N" end, and the higher one is "L" end.

2) Cable connecting the box to the BTS3601C

It is a complete three-core cable (L, N, and PE). The port at BTS3601C side is a round waterproof connector which has been installed during the instllation of major equipment. The output interface of the lightning protection box is an air switch. When connecting

this cable, directly take off the cover of the cable and insert the copper-core wire into the switch.

In terms of its appearance, if the cable comprises three wires, black one, white one and yellow-green one, the black is L end, the white is N end, and the last one is PGND wire. If it is made of coffee, blue, and yellow-green wires, the coffee wire is the L, the blue wire is the N, and the last one is PGND wire.

Figure 2-51 shows the connection.

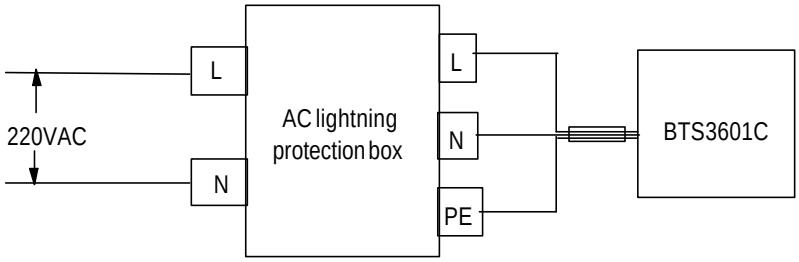

Figure 2-51 Cable connection of AC lightning protection box networking (without UPS)

3) Grounding cable of the AC lightning protection box

Inside the box, there is a grounding bar. If the AC power cable carries PGND cable (PE wire), the PGND cable should be grounded together with the PGND of the BTS3601C system. The PE wire should be connected directly to the grounding bar of the box.

AC lightning protection box should have a PGND, and the PGND cable should be made of yellow-green plastic insulation copper wire with the core diameter not less than 16mm^2. The length of the PGND cable connecting to the BTS3601C grounding busbar should be less than 1m.

Caution:

1) Generally, the only power cable provided by Huawei together with the BTS3601C is 3m. Users are required to prepare the extra cable if it is not long enough.

2) The external AC power cable to the BTS3601C should be connected to the AC lightning protection box. It is not allowed to connect the external power cable to the terminal for power distribution in the IAFB first, then to the AC lightning protection box.

3) Above principles for cable connection are also applicable to the IAFB (with AC lightning protection box built-in).

II. Plan with the IABB

Figure 2-52 shows the connection in this networking mode.

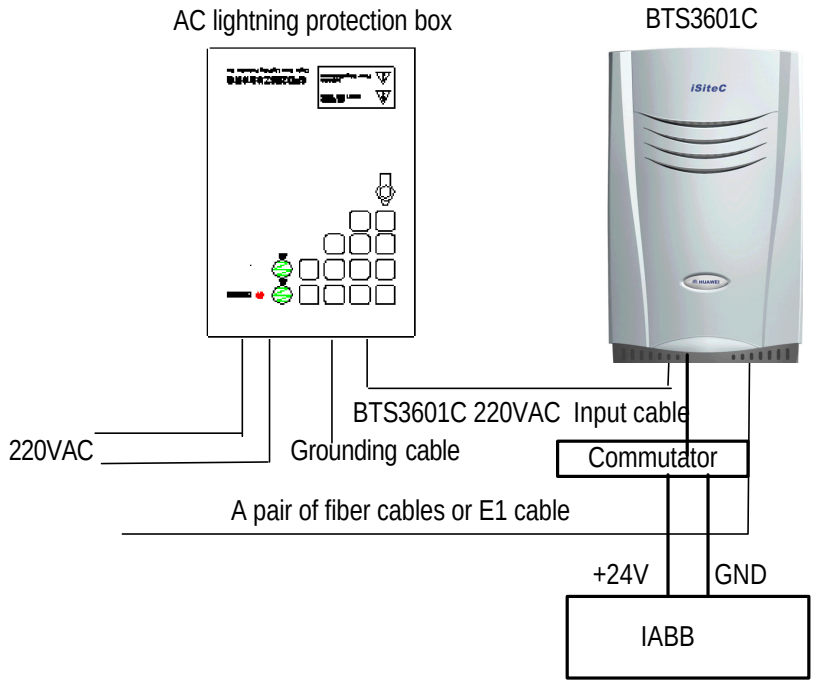

Figure 2-52 Networking of AC lightning protection box (20kA, with the IABB)

In this plan, the cable connection of AC lightning protection box is completely the same as that of the IABB. Following is to describe the cable connection between the IABB and the BTS3601C.

1) Cable connection between IABB and BTS3601C

Two cables are led out from the IABB. One is of +24V and red, and the other is of GND and black. Two cables are connected to the DC power cable of the BTS3601C through a commutator. The +24V cable is interconnected to the red one of the BTS3601C DC power cable through the red plug of the commutator; and the blcak GND cable is interconnected to the black one of the BTS3601C power cable through the black pulg of the commutator. After their interconnections, three types of tapes should be used for the waterproof of the connections. The detailed processing is available in Section 2.3.6.

2) Grounding of the IABB

The battery box is generally installed on the platform. In this case, the metal shell of the box should be grounded, and the PGND wire should be connected to the BTS3601C grounding busbar from the PGND terminal. The wire should be made of yellow-green plastic insulation copper wire with the core diameter not less than 16mm^2. The batteries inside the box should not be grounded.

2.5.3 Networking of IAFB

I. Plan with backup power supply equipment

Figure 2-53 shows the connection between the IAFB and the BTS3601C in the BTS3601C networking (without UPS and the IABB).

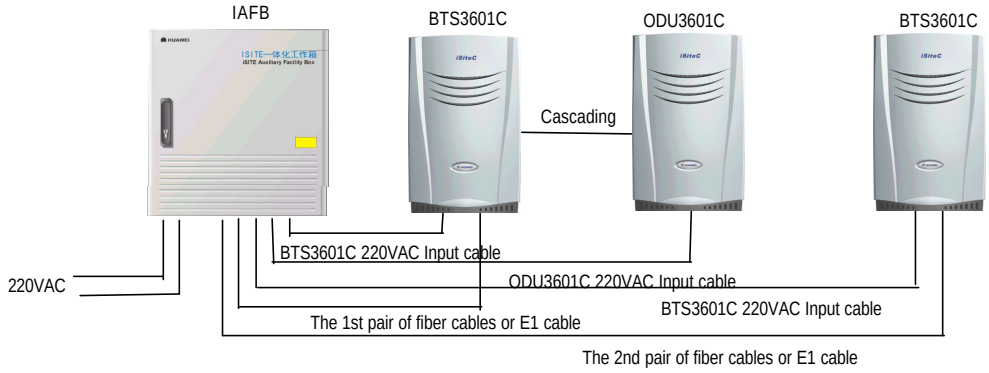

Figure 2-53 Networking between BTS3601C and IAFB (without backup power supply equipment)

220V AC power is led into the air switch of the IAFB, then to the BTS3601C. One IAFB can supply power for up to 3 BTS3601Cs at the same time.

Please connect the relevant cables correctly according to the labels on them, the correspondence shown in Figure 2-54 and Figure 2-55, and the correspondence between labels and cables shown in Table 2-3.

Note:

1) Figure 2-55 shows the front view of cable connection on DDF shown in Figure 2-54.

2) The PGND cables of BTS3601C and other equipment in the system should all be connected to the grounding bar on the shell of the IAFB. And a PGND cable should be led from the grounding bar on the IAFB shell and connected to the grounding downlead of the counterpoise. This grounding cable should be made of yellow-green plastic insulation copper wire with the core diameter not less than 35mm^2.

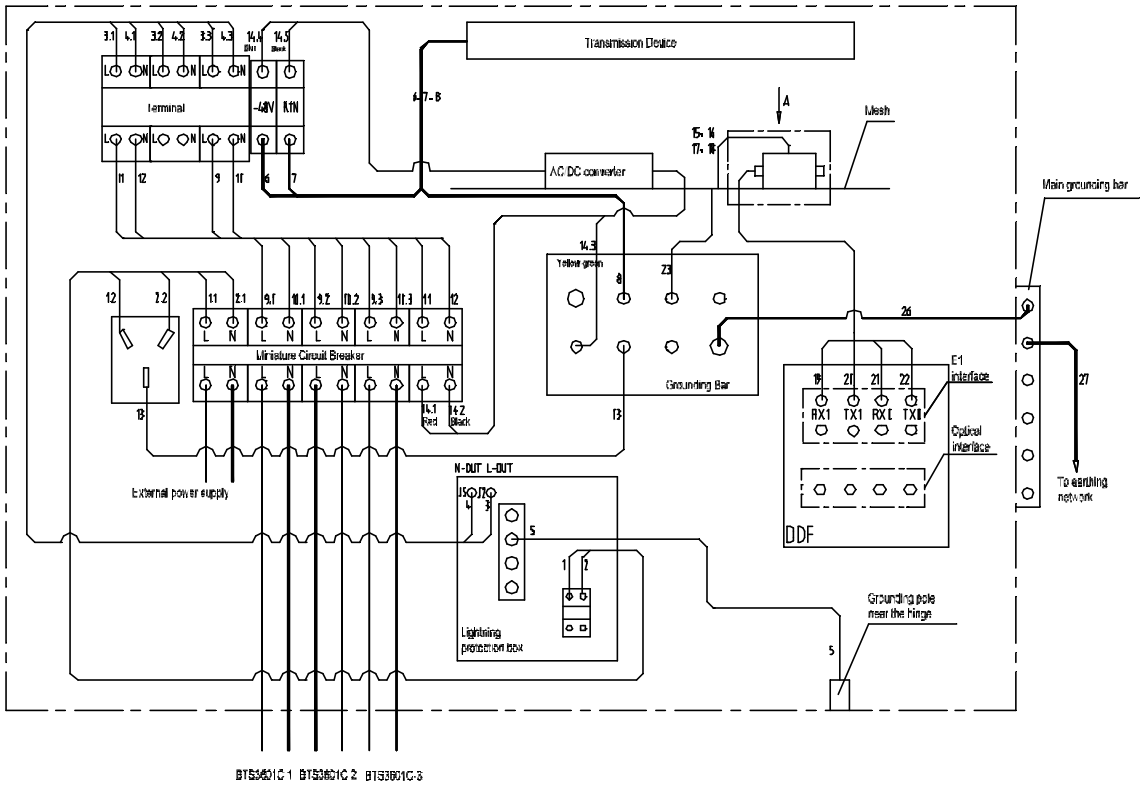

Figure 2-54 Cable distribution of IAFB networking (without UPS)

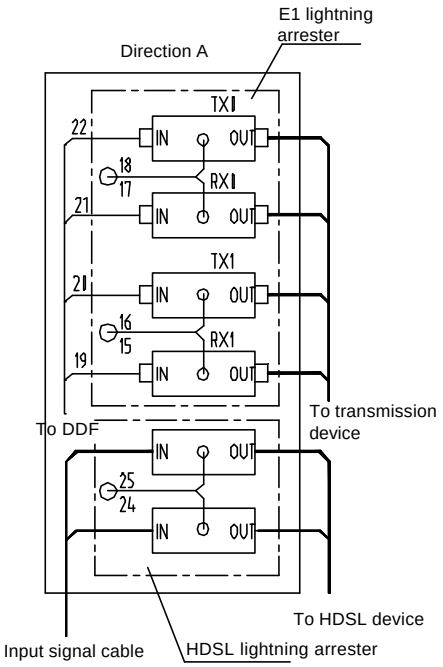

Figure 2-55 Trunk cable distribution of IAFB networking (without UPS)

Table 2-3 Description of cable distribution in IAFB networking (without UPS)

Cable No.	Code	Name	Quantity
1	DKBA04041975WX	Power cable connecting air switch to AC lightning protection box	1
2	DKBA04041976WX	Power cable connecting air switch to AC lightning protection box	1
3	DKBA04041977WX	Power cable connecting AC lightning protection box to wiring terminal	1
4	DKBA04041978WX	Power cable connecting AC lightning protection box to wiring terminal	1
5	DKBA04041979WX	Grounding cable for AC lightning protection box	1
6	DKBA04041980WX	Power cable connecting transmission equipment to wiring terminal	1
7	DKBA04041981WX	Power cable connecting transmission equipment to wiring terminal	1
8	DKBA04041982WX	Power cable connecting transmission equipment to wiring terminal	1
9	DKBA04041984WX	Power cable from wiring terminal to bipolar air switch	1
10	DKBA04041985WX	Power cable from wiring terminal to bipolar air switch	1
11	DKBA04041986WX	Power cable connecting wiring terminal to air switch (without UPS)	1
12	DKBA04041987WX	Power cable connecting wiring terminal to air switch (without UPS)	1
13	DKBA04200197ZP	Grounding cable for AC socket	1
15~18	DKBA04200199ZP	Grounding cable for signal lightning arrester	4
19~22	DKBA4.851.2527MX	E1 interface cable	4
23	DKBA04040980WX	PGND cable	1
26	DKBA04041983WX	Internal grounding cable for IAFB	1
27	DKBA04040300WX	PGND power cable	1

II. Plan with backup power supply equipment

If the mains supply at the BTS3601C side is interrupted, the UPS backup power supply system will continue to power the BTS3601C and all its auxiliary equipment, instead. Figure 2-56 shows how the IAFB connects to the BTS3601C and UPS.

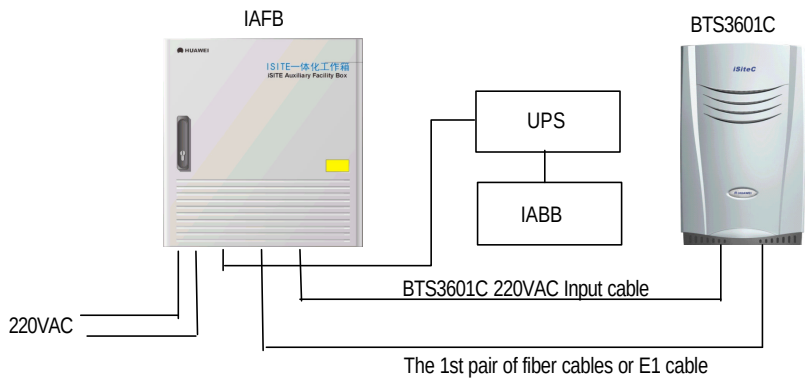

Figure 2-56 Networking containing BTS3601C and IAFB (with BTS3601C backup power supply equipment)

Following are their detailed cable connections:

1) Cable connection between UPS and IABB

UPS connects to the IABB via two cables, i.e. one is negative cable and the other is positive cable. Each cable has one of its ends equipped with a four-core plug to connect to the UPS. On plugs, labels are attached to tell the positive end (+) and negative end (-). The other end needs to be prepared at site: There are two big OT connectors and heat-shrink tubes; cut the available cable (10m long) between the UPS and the IABB into the piece (with proper length according to the site conditions), then make the OT connector with a crimping piler and then connect the terminal to the connector at the battery. This cable should be led through the inlet at the bottom of the battery box and in. The cable length should be minimized for the sake of lightning protection.

⚠ **Caution:**

1) The cables must be connected to the UPS and the battery box correctly with their polarities in correspondence with thoe at the plugs of the UPS and the battery box. Any incorrect connection will result in the damage of the UPS and batteries.

2) Relabel the cut cable correctly at once if the original label has been damaged when cuting the cable.

---

2) Cable connection among IAFB, BTS3601C and UPS

It is required to connect cables among IAFB, BTS3601C and UPS according to labels on them, the correspondence shown in Figure 2-57 and Figure 2-58, and the correspondence between labels and cables described in Table 2-4.

🕮 **Note:**

Figure 2-58 shows the front view of the cable connection on DDF shown in Figure 2-57.

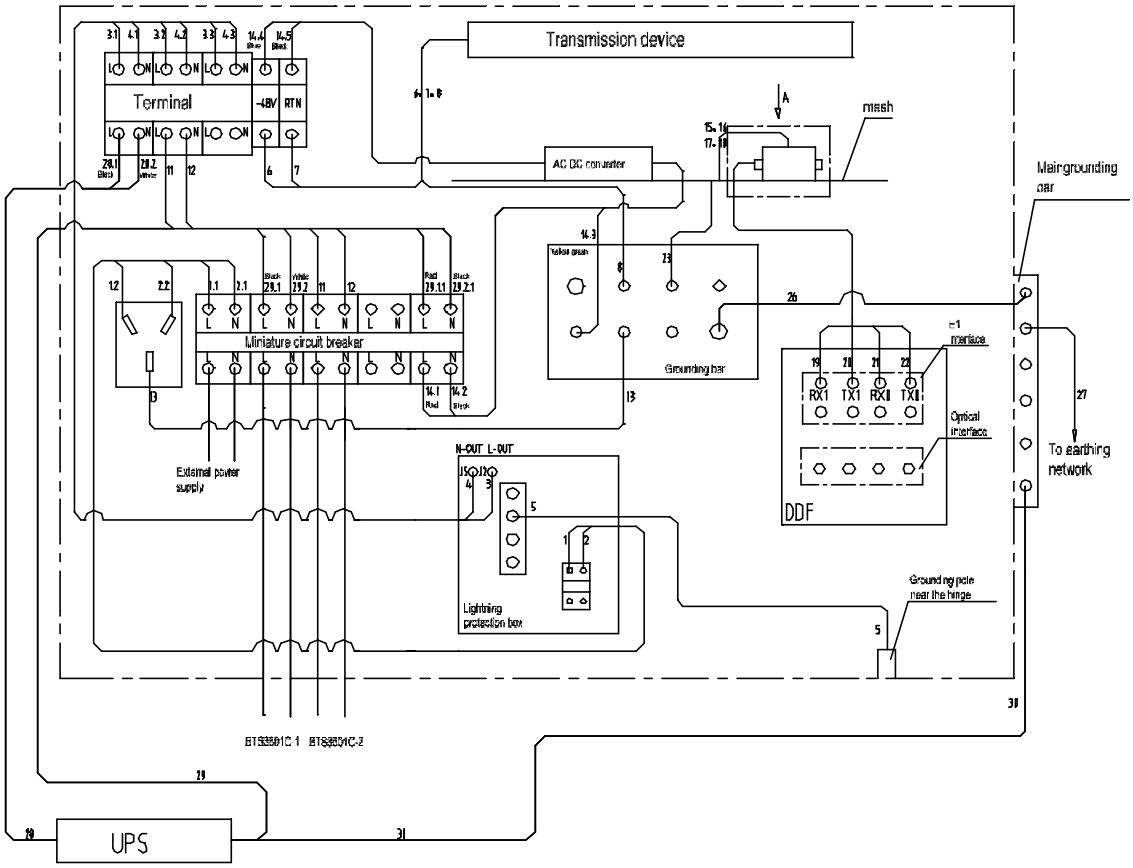

Figure 2-57 Cable distribution in IAFB networking

Note:

In Figure 2-57, the power of BTS3601C 1 is protected by UPS, i.e. when its power is interrupted, the UPS will instead supply it with power. However, the BTS3601C 2 is not protected.

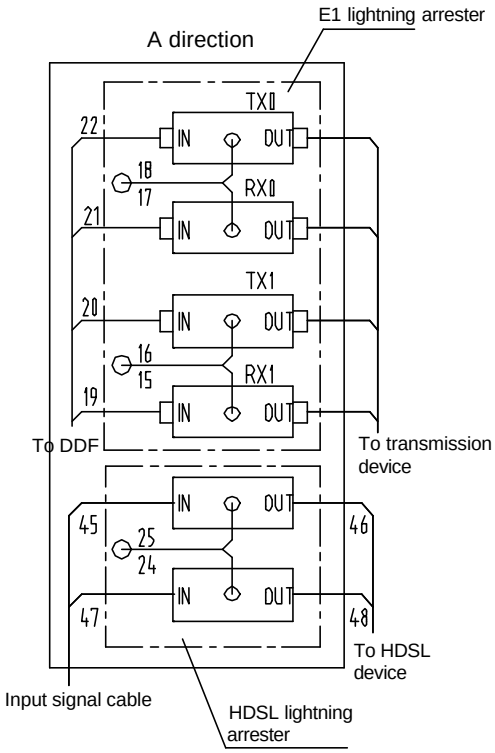

Figure 2-58 Trunk cable distribution in IAFB networking (1 BTS3601C with UPS)

Table 2-4 Description of cable distribution in IAFB netwroking (1 BTS3601C with UPS)

Cable No.	Code	Name	Quantity
1	DKBA04041975WX	Power cable connecting air switch to AC lightning protection box	1
2	DKBA04041976WX	Power cable connecting air switch to AC lightning protection box	1
3	DKBA04041977WX	Power cable connecting AC lightning protection box to wiring terminal	1
4	DKBA04041978WX	Power cable connecting AC lightning protection box to wiring terminal	1
5	DKBA04041979WX	Grounding cable for AC lightning protection box	1
6	DKBA04041980WX	Power cable connecting transmission equipment to wiring terminal	1
7	DKBA04041981WX	Power cable from transmission equipment to wiring terminal	1
8	DKBA04041982WX	Power cable connecting transmission equipment to wiring terminal	1
11	DKBA04041986WX	Power cable connecting wiring terminal to air switch (without UPS)	1
12	DKBA04041987WX	Power cable connecting wiring terminal to air switch (without UPS)	1
13	DKBA04200197ZP	Grounding cable for AC socket	1
15~18	DKBA04200199ZP	Grounding cable for signal lightning arrester	4
19~22	DKBA4.851.2527MX	E1 interface cable	4
23	DKBA04040980WX	PGND cable	1
26	DKBA04041983WX	Internal grounding cable for IAFB	1
27, 30	DKBA04040300WX	PGND power cable	2
28	DKBA04041990WX	UPS power cable	1
29	DKBA04041991WX	UPS POWER CABLE	1

An IAFB can connect up to 3 BTS3601Cs. Following is to describe the cable connections in terms of the varied number of BTS3601C connected to IAFB.

3) IAFB networking (2 BTS3601Cs with UPS)

It is required to connect cables sent to the site according to labels on them, the connection correspondence shown in Figure 2-59 and Figure 2-60, and the correspondence between labels and cables described in Table 2-5.

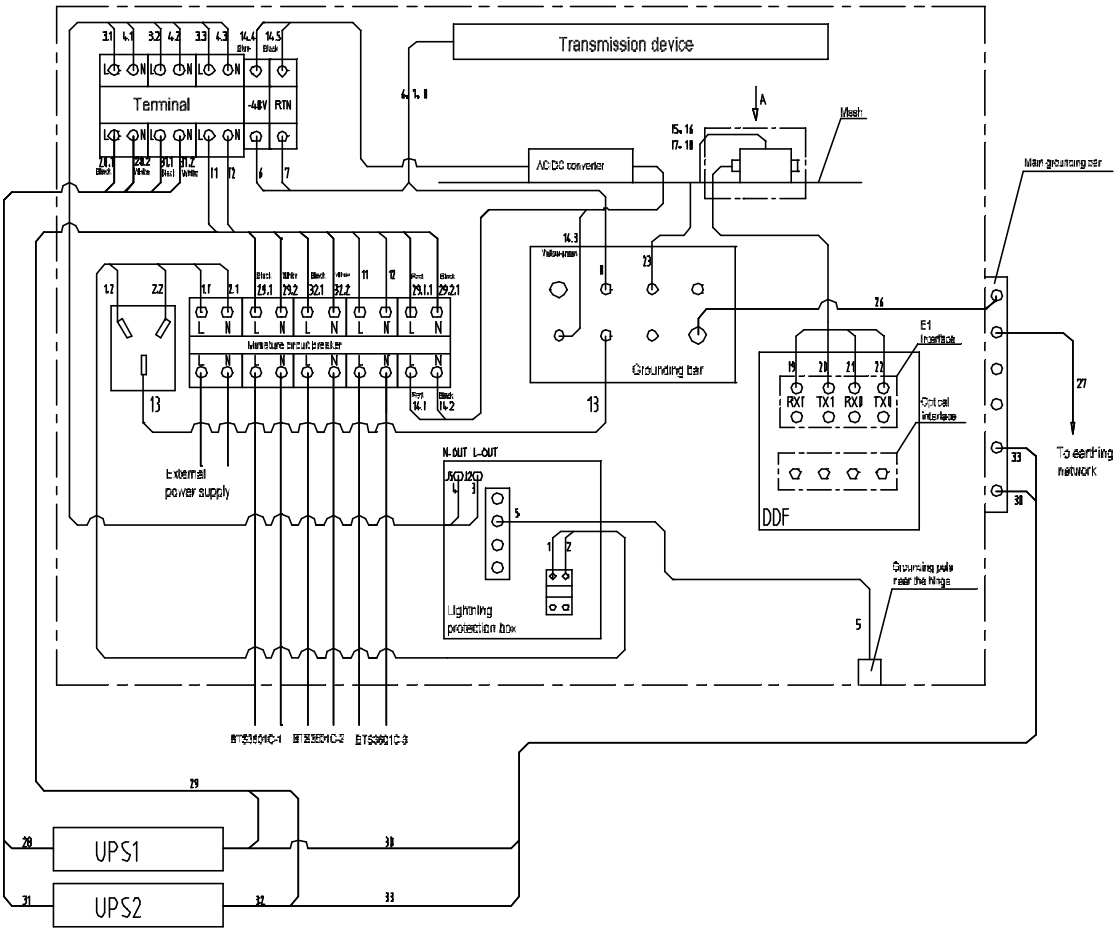

Figure 2-59 Cable distribution in IAFB networking (2 BTS3601Cs with UPS)

Note:

In Figure 2-59, if the AC power supply of BTS3601C 1 and BTS3601C 2 is interrupted, UPS will power them, instead. However, when the AC power of BTS3601C 3 is interrupted, UPS will not power it with AC power.

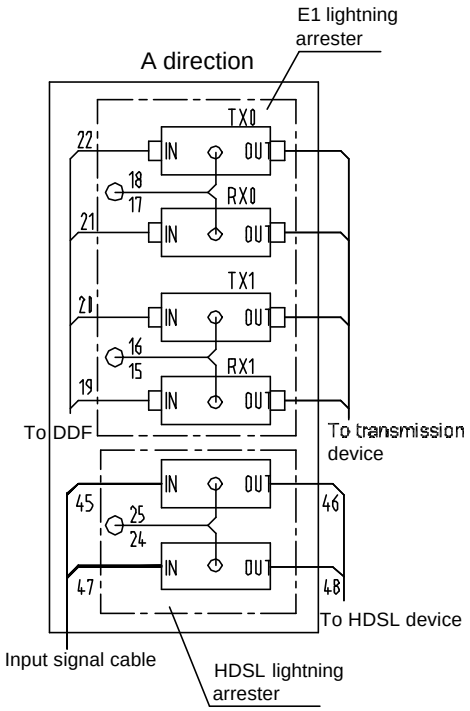

Figure 2-60 Trunk cable distribution in IAFB networking (2 BTS3601Cs with UPS)

Table 2-5 Description of cable distribution in IAFB networking (2 BTS3601Cs with UPS)

Cable No.	Code	Name	Quantity
1	DKBA04041975WX	Power cable connecting air switch to AC lightning protection box	1
2	DKBA04041976WX	Power cable connecting air switch to AC lightning protection box	1
3	DKBA04041977WX	Power cable connecting AC lightning protection box to wiring terminal	1
4	DKBA04041978WX	Power cable connecting AC lightning protection box to wiring terminal	1
5	DKBA04041979WX	Grounding cable for AC lightning protection box	1
6	DKBA04041980WX	Power cable connecting transmission equipment to wiring terminal	1
7	DKBA04041981WX	Power cable connecting transmission equipment to wiring terminal	1
8	DKBA04041982WX	Power cable between transmission equipment and wiring terminal	1
11	DKBA04041986WX	Power cable connecting wiring terminal to air switch (without UPS)	1
12	DKBA04041987WX	Power cable connecting wiring terminal to air switch (without UPS)	1
13	DKBA04200197ZP	Grounding cable for AC socket	1
15~18	DKBA04200199ZP	Grounding cable for signal lightning arrester	4
19~22	DKBA4.851.2527MX	E1 interface cable	4
23	DKBA04040980WX	PGND cable	1
26	DKBA04041983WX	Internal grounding cable of IAFB	1
27, 30, 33	DKBA04040300WX	PGND power cable	3
28, 31, 32	DKBA04041990WX	UPS power cable	3
29	DKBA04041991WX	UPS power cable	1

4) IAFB networking (3 BTS3601Cs with UPS)

It is required to connect cables sent to the site according to labels on them, the connection correspondence shown in Figure 2-61 and Figure 2-62, and the correspondence between labels and cables described in Table 2-6.

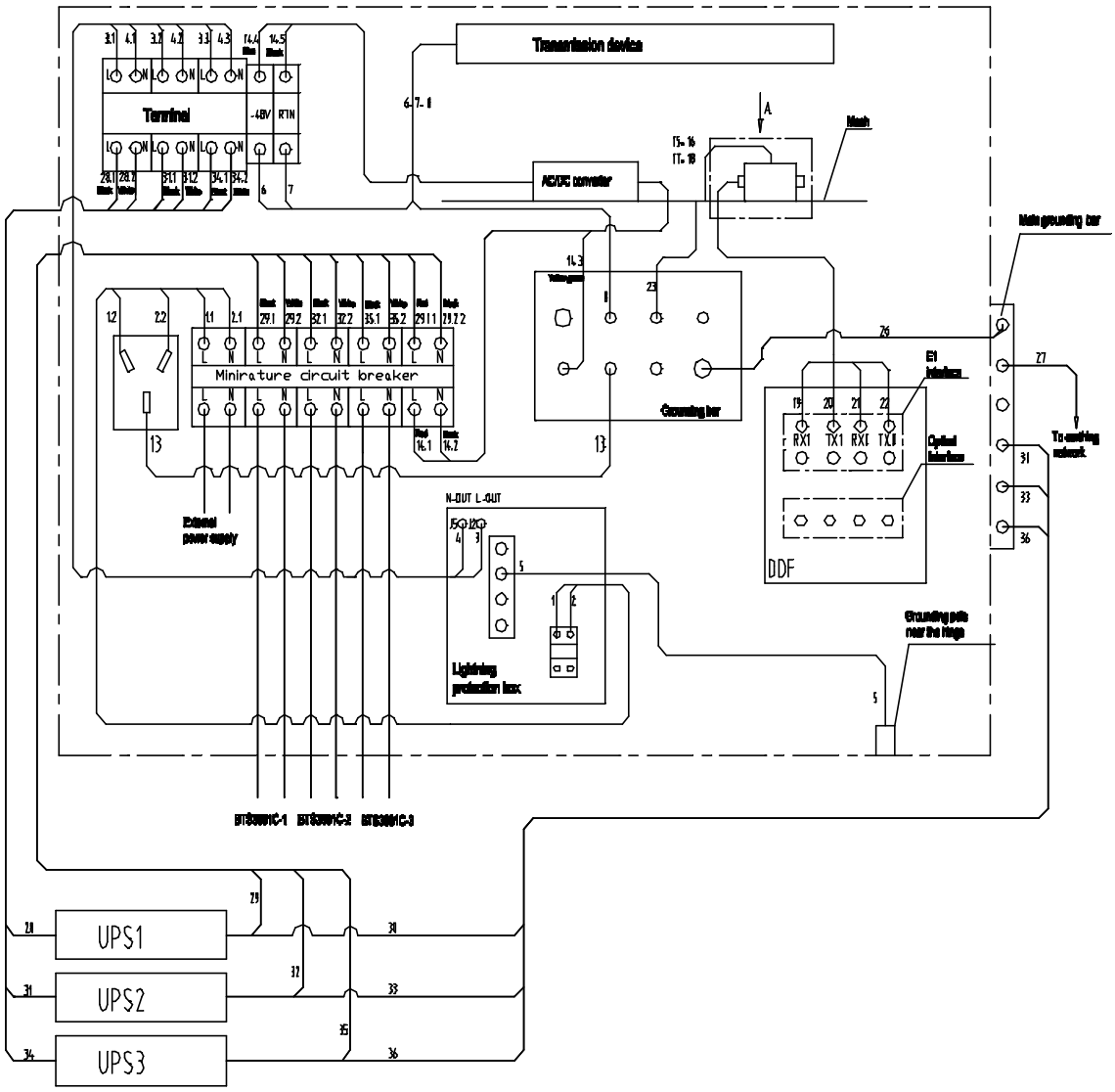

Figure 2-61 Cable distribution in IAFB networking (3 BTS3601Cs with UPS)

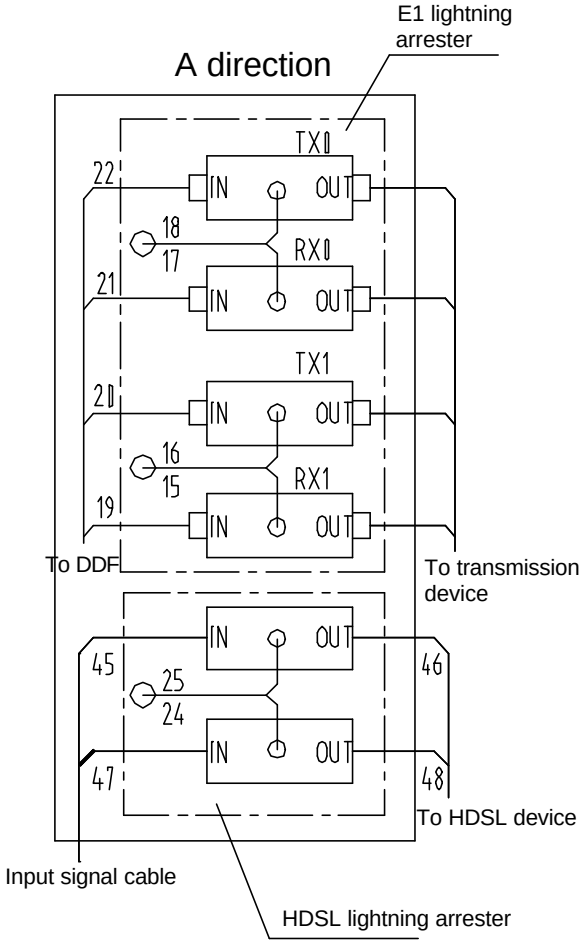

Figure 2-62 Trunk cable distribution in IAFB networking (3 BTS3601Cs with UPS)

Table 2-6 Description of cable distribution in IAFB networking (3 BTS3601Cs with UPS)

Cable No.	Code	Name	Quantity
1	DKBA04041975WX	Power cable between air switch and AC lightning protection box	1
2	DKBA04041976WX	Power cable between air switch and AC lightning protection box	1
3	DKBA04041977WX	Power cable between AC lightning protection box and wiring terminal	1
4	DKBA04041978WX	Power cable between AC lightning protection box and wiring terminal	1
5	DKBA04041979WX	Grounding cable for AC lightning protection box	1
6	DKBA04041980WX	Power cable connecting transmission equipment to wiring terminal	1
7	DKBA04041981WX	Power cable connecting transmission equipment to wiring terminal	1
8	DKBA04041982WX	Power cables connecting transmission equipment to wiring terminal	1
13	DKBA04200197ZP	Grounding cable for AC socket	1
15~18	DKBA04200199ZP	Grounding cable for signal lightning arrester	4
19~22	DKBA4.851.2527MX	E1 interface cable	4
23	DKBA04040980WX	PGND cable	1

Cable No.	Code	Name	Quantity
26	DKBA04041983WX	Internal grounding cable of IAFB	1
27, 30, 33, 36	DKBA04040300WX	PGND power cable	4
28, 31, 32, 34, 35	DKBA04041990WX	UPS power cable	5
29	DKBA04041991WX	UPS power cable	1

2.5.4 Networking of Inverter

This networking mode is applied to sites where -48V power supply is available. Figure 2-63 shows the specific networking.

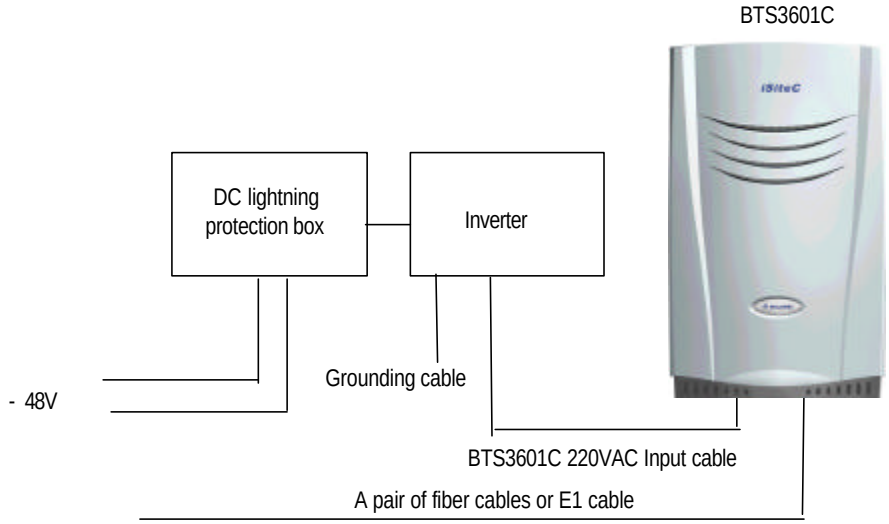

Figure 2-63 Inverter networking

It is required that the metal shell of the inverter be grounded, and the PGND cable of the step-up transformer be connected to BTS3601C grounding busbar directly. The PGND cable of the inverter should be made of yellow-green plasitc insulation copper wire with the core diameter not less than 16mm^2.

For detailed connections of inverter cables, please refer to the relevant contents in product manuals.