Table of Contents

Chapter 1 System Overview 1-1
1.1 Introduction 1-1
1.1.1 Network Solution of cdma2000 1X System 1-1
1.1.2 Market Orientation of BTS3601C.....1-3
1.2 System Feature 1-3
1.3 Technical Index 1-5
1.3.1 Engineering Index.....1-5
1.3.2 Protection Index.....1-5
1.3.3 Capacity Index.....1-6
1.3.4 Performance Index.....1-6
1.4 External Interface.....1-7
1.4.1 Um Interface.....1-8
1.4.2 Abis Interface 1-11
1.4.3 Other Interface.....1-15
1.5 Reliability Design 1-16
1.5.1 Hardware Reliability Design 1-16
1.5.2 Software Reliability Design 1-18
Chapter 2 System Architecture.....2-1
2.1 Overview.....2-1
2.1.1 Appearance.....2-1
2.1.2 Functional Structure 2-2
2.2 MBPM.....2-2
2.2.1 Structure and Principle 2-3
2.2.2 External Interface.....2-7
2.2.3 Key Index 2-8
2.3 MTRM.....2-8
2.3.1 Structure and Principle 2-9
2.3.2 External Interface.....2-11
2.3.3 Key Index 2-12
2.4 MPAM.....2-12
2.4.1 Structure and Principle 2-12
2.4.2 External Interface.....2-13
2.4.3 Key Index 2-14
2.5 MFEM.....2-14
2.5.1 Structure and Principle 2-14
2.5.2 External Interface.....2-15
2.5.3 Key Index 2-16

2.6 MAPM....2-16
2.6.1 Structure and Principle....2-16
2.6.2 External Interface....2-16
2.6.3 Key Index....2-17
2.7 MBKP....2-17
2.8 Antenna and Feeder Subsystem....2-17
2.8.1 RF Antenna & Feeder....2-18
2.8.2 Dual-Satellite Synchronization Antenna and Feeder....2-20

Chapter 3 System Function....3-1
3.1 Call Procedure Introduction....3-1
3.1.1 Speech Service Call Procedure....3-1
3.1.2 Data Service Call Procedure....3-4
3.2 Signaling Processing....3-7
3.3 Baseband Processing....3-9
3.4 Radio Resource Management....3-11
3.4.1 Power Control....3-11
3.4.2 Handoff....3-13
3.4.3 Radio Configuration and Channel Support....3-13
3.4.4 Diversity Receiving....3-19
3.4.5 Cell Breath....3-19
3.5 Operation and Maintenance....3-19
3.5.1 Loading Management....3-19
3.5.2 Configuration Management....3-20
3.5.3 Equipment Management....3-24
3.5.4 Status Management....3-26
3.5.5 Tracing Management....3-28
3.5.6 Test Management....3-29
3.6 Lightning Protection....3-30
3.6.1 Lightning Protection for Power Supply....3-30
3.6.2 Lightning Protection for Trunk Line....3-31
3.6.3 Lightning Protection for Antenna and Feeder System....3-31
3.7 Configuration and Networking....3-32
3.7.1 BTS Configuration....3-32
3.7.2 BTS Networking....3-33

Appendix A Performance of Receiver and Transmitter....A-1
A.1 Performance of Receiver....A-1
A.1.1 Frequency Coverage....A-1
A.1.2 Access Probe Acquisition....A-1
A.1.3 R-TCH Demodulation Performance....A-1
A.1.4 Receiving Performance....A-8
A.1.5 Limitation on Emission....A-9
A.1.6 RSQI....A-9

A.2 Performance of Transmitter A-10
A.2.1 Frequency Requirement A-10
A.2.2 Modulation Requirement A-10
A.2.3 RF Output Power Requirement A-11
A.2.4 Limitation on Emission A-11

Appendix B EMC Performance B-1
B.1 EMI Performance B-1
B.2 EMS Performance B-2

Appendix C Environment Requirement C-1
C.1 Storage Environment C-1
C.2 Transportation Environment C-2
C.3 Operation Environment C-4

Appendix D Electromagnetic Radiation D-1
D.1 Introduction D-1
D.2 MPE D-1
D.3 Estimation of Exposure to Electromagnetic Field D-3
D.4 Calculation of Safe Distance D-3
D.5 Location of BTS Antenna D-4
D.5.1 Exclusion Zone D-4
D.5.2 Guidelines on Selecting Antenna Location D-4

Appendix E Standard Compliance E-1
E.1 General Technical Specification E-1
E.2 Um Interface E-1
E.3 Abis Interface E-1
E.4 Lightning Protection E-2
E.5 Safety E-3
E.6 EMC E-3
E.7 Environment E-5

Appendix F Abbreviation F-1
F.1 Abbreviation of Modules F-1
F.2 Glossary F-1

Chapter 1 System Overview

1.1 Introduction

The Mobile Communication System has experienced the first generation (analog system) and the second generation (digital system). As the one of the main development trends of the second generation, cdma2000 1X mobile communication system has been widely used for commercial purpose.

This section first introduces the network solution of Huawei cdma2000 1X mobile communication system, and then introduces the market orientation of Huawei outdoor type Base Transceiver Station (BTS) BTS3601C.

1.1.1 Network Solution of cdma2000 1X System

The cdma2000 1X mobile communication system comprises the Base Station Subsystem (BSS) and the Core Network (CN).

The BSS comprises the Base Transceiver Station, Base Station Controller (BSC), and Packet Control Function (PCF) which is usually integrated with BSC.

The CN comprises the packet domain network and circuit domain network. The equipment of packet domain interworks with Internet, and that of the circuit domain interworks with the conventional PLMN and PSTN/ISDN.

The system's operation and maintenance is implemented via Huawei integrated mobile network management system iManager M2000.

Figure 1-1 shows the network of cdma2000 1X system. This manual aims to introduce the BTS of the BSS part, therefore this figure details the network structure of BSS.

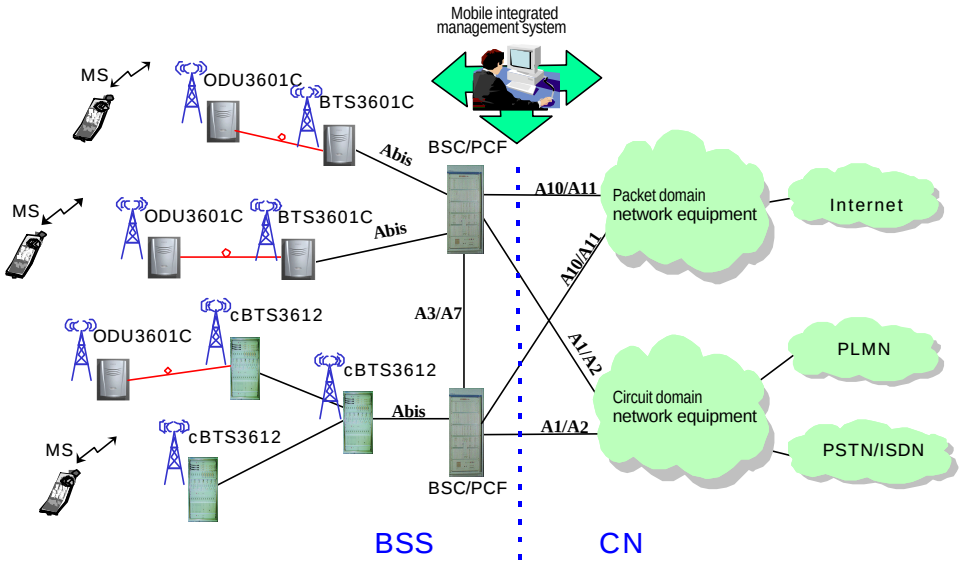

MS: Mobile Station
ISDN: Integrated Services Digital Network
PSTN: Public Switched Telephone Network
BSS: Base Station Subsystem
BSC: Base Station Controller
PLMN: Public Land Mobile Network
PCF: Packet Control Function
CN: Core Network

Figure 1-1 Network structure of Huawei cdma2000 1X mobile communication system

- BTS3601C

BTS3601C is an outdoor one-carrier BTS. It transmits/receives radio signals so as to realize the communication between the radio network system and the Mobile Station (MS).

- cBTS3612

cBTS3612 is an indoor BTS equipment. The maximum capacity of single cabinet contains 12 sector-carriers. Same with BTS3601C, it also transmits/receives radio signals to accomplish the communication between the radio network system and the MS.

- ODU3601C

ODU3601C is a single-carrier outdoor BTS. It shares the resource of its upper-level BTS, including baseband processing unit, main control unit and clock unit. It implements radio signal transmission and reception together with the upper-level BTS.

- Base Station Controller (BSC)

BSC performs the following functions: BTS control and management, call connection and disconnection, mobility management, power control, and radio resource management. It provides stable and reliable radio connections for the upper-level services through soft/hard handoff.

- Packet Control Function (PCF)

PCF is used for the management of Radio-Packet (R-P) connection. As radio resources are limited, they should be released when subscribers are not sending or receiving information, but the Peer-Peer Protocol (PPP) connection must be maintained. PCF shields the radio mobility against the upper-level services through the handoff function.

- Mobile Station (MS)

MS is mobile subscriber equipment that can originate and receive calls, and can communicate with BTS.

1.1.2 Market Orientation of BTS3601C

Huawei BTS3601C is fully compatible with IS-95A/B and IS-2000 standards.

BTS3601C is an outdoor BTS, configured with one carrier. It features small size, easy installation, flexible networking, less investment and fast network construction. BTS3601C can be used in residential quarters and urban hot spots / blind spots, and provide small-capacity wide-coverage for remote areas (such as rural area, grassland, highway, scenic spots).

1.2 System Feature

BTS3601C is a highly integrated product which can satisfy customer's different demands for capacity, configuration, installation, power supply, transmission and services. It is a typical "All In One" BTS with the following features:

I. Convenient operation and maintenance

- It provides remote centralized maintenance and alarm reporting, real-time status query, on-line board test and system fault locating, as well as system restart.
- A Telnet Server is provided, through which users can log on to BTS3601C in the standard Telnet mode via the local Ethernet interface for operation and maintenance.
- Its modularized structure reduces the internal connections and improves the reliability of the system, and thus makes the installation and maintenance easier.
- In the case of system interruption due to power supply or transmission causes, the BTS3601C can restart automatically right after the faults are cleared.

II. Flexible configuration and networking

- Its Abis interface supports 1 E1 or 1 Synchronization Transfer Mode 1 (STM-1) port, which can be configured flexibly.
- BTS3601C can be configured into an omni or directional BTS. If equipped with power splitter, it can be configured in the S(0.5/0.5) mode.

- It supports various configuration modes like S(1/1) and S(1/1/1) through cascading ODU3601Cs.
- For optical transmission, it supports chain and ring networking modes.

Configuration and networking details are available in "3.7 Configuration and Networking"

Note:

To meet the actual implementation requirements, the external E1 interface of BTS3601C can be confiured as the T1 interface. Unless otherwise specified, the following description about E1 interface is also applicable to T1 interface.

III. Support for multi-bands

BTS3601C supports 450MHz and 800MHz bands, therefore, it can be applied in the 450MHz communication system and the 800MHz communication system.

IV. Hierarchical power supply

If the BTS3601C is equipped with a 40AH storage battery, it can keep working normally for 1 hour after the AC power is broken off, then the power amplification module will be switched off, and the BTS can maintain transmission for another 8 hours.

V. Easy installation

Featuring small size, light weight and mains supply, BTS3601C does not require an equipment room or air conditioner. It neither requires a special tower as it can be easily installed on a metal post, stayed tower or on the wall. All these can reduce the site construction cost without affecting the network quality.

VI. Excellent protection performance

Equipped with built-in power supply unit, temperature control unit and equipment monitoring unit, it can be applied in any severe environment.

BTS3601C is dust-proof, anti-burglary, water-proof, damp-proof. With its protection performance in compliance with the IP55 (IEC 60529: Degrees of protection provided by enclosure), it operates normally in different whether conditions.

VII. Pleasing appearance

Huawei BTS3601C has a compact structure and is aesthetically designed, which makes it an attractive solution for both indoor and outdoor facilities.

1.3 Technical Index

The technical indices include engineering, protection, capacity and performance indices.

The engineering indices include power supply, power consumption, weight, dimensions and other indices involved in engineering installation.

The protection indices refer to the capabilities of the main external interfaces against surge current.

The capacity indices include the carrier capacity and channel capacity.

The performance indices refer to the technical parameters of its transceiver and the reliability indices of the whole system.

1.3.1 Engineering Index

Power supply	~220V (150~300V AC)
Power consumption	<350W (In normal temperature, while the heating plate is not working) <700W (In low temperature, while the heating plate is working)
Weight	<45kg
Operation environment	Temperature: -40°C~+55°C Relative humidity 5%~100%
Cabinet dimensions (height×width×depth)	700mm×450mm×330mm

1.3.2 Protection Index

E1 interface	Differential mode 5kA, or common mode 10kA surge current
RF feeder interface	Differential mode 8kA, or common mode 8kA surge current
AC power supply interface (for connecting AC lightning protection box)	Differential mode 40kA, or common mode 40kA surge current
Satellite feeder interface (for connecting lightning arrestor for satellite feeder)	Differential mode 8kA, or common mode 8kA surge current

1.3.3 Capacity Index

Number of sector-carriers	Configuration of single-BTS: 1 sector-carrier
	Configuration of cascaded ODU3601Cs: 3 sector-carriers
Number of channels	96 reverse channels and 192 forward channels, satisfying the 3 sector-carriers application

1.3.4 Performance Index

I. Transmission

- 450MHz band

Working frequency	460~470MHz
Channel bandwidth	1.23MHz
Channel precision	25kHz
Frequency tolerance	≤±0.05ppm
Transmit power	20W (the maximum value measured at the feeder port of the cabinet)

- 800MHz band

Frequency coverage	869~894MHz
Channel bandwidth	1.23MHz
Channel step length	30kHz
Frequency tolerance	≤±0.05ppm
Transmit power	20W (the maximum value measured at the feeder port of the cabinet)

II. Reception

- 450MHz band

Working frequency	450~460MHz
Channel bandwidth	1.23MHz
Channel precision	25kHz
Signal receiving sensitivity	-127dBm (RC3, main and diversity reception)

- 800MHz band

Working frequency	824~849MHz
Channel bandwidth	1.23MHz
Channel step length	30kHz
Signal receiving sensitivity	-128dBm (RC3, main and diversity reception)

III. System reliability

Mean Time Between Failures (MTBF)	≥100,000 hour
Mean Time To Repair (MTTR)	≤1 hour
Availability	≥99.999%

Note:

Reliability refers to the product capability of performing specified functions under the specified conditions and in specified time.

Mean Time Between Failures (MTBF): applicable to recoverable systems.

Mean Time To Repair (MTTR): including the time of fault checking, isolation, unit replacement and recovery.

Availability (A): a comprehensive index to measure the system availability.

1.4 External Interface

The external interfaces of BTS3601C are shown in the Figure 1-2.

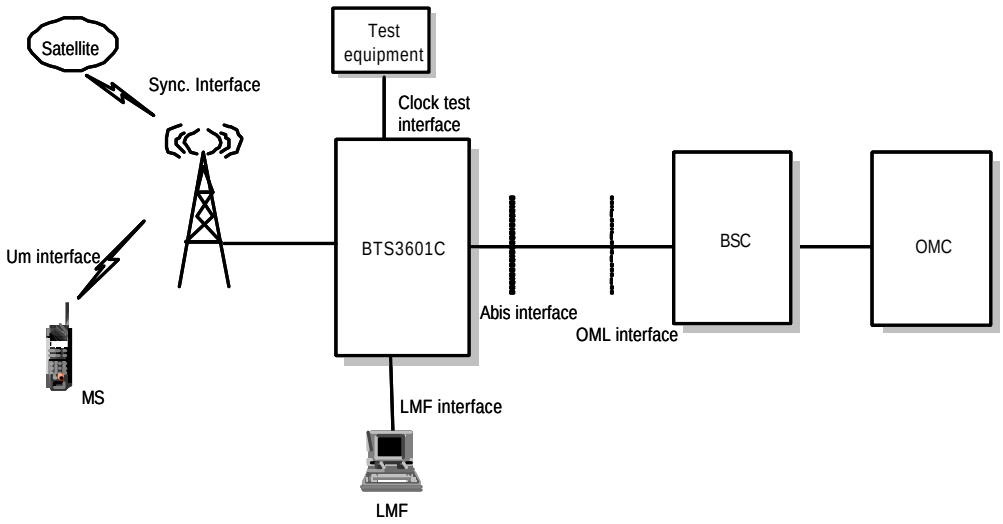

Figure 1-2 External interfaces of BTS3601C

- Um interface: Interface with MS.
- Abis interface: Interface with BSC.
- Operation and Maintenance Link (OML) interface: Interface with the remote OMC. It shares the transmission resources with Abis interface.
- Local Maintenance Function (LMF) interface: Interface with BTS local maintenance console.
- System synchronization interface: Including GPS/GLONASS antenna interface and system external synchronization interface. When GPS/GLONASS is not available and there is other clock synchronization equipment, the clock synchronization signals of the equipment can be output to the external synchronization interface of BTS3601C system.
- BTS test interface: Interface for BTS test, providing such signals as 10MHz and 2s signal.

1.4.1 Um Interface

I. Overview

In Public Land Mobile Network (PLMN), MS is connected with the fixed part of the network through the radio channel. The radio channel allows the subscribers to be connected with the network and to enjoy telecommunication services.

To implement interconnection between MS and BSS, systematic rules and standards should be established for signal transmission on radio channels. The standard for regulating radio channel signal transmission is called radio interface, or Um interface.

Um interface is the most important interface among the many interfaces of CDMA system. Firstly, standardized radio interface ensures that MSs of different

manufacturers are fully compatible with different networks. This is one of the fundamental conditions for realizing the roaming function of CDMA system. Secondly, radio interface defines the spectrum availability and capacity of CDMA system.

Um interface is defined with the following features:

- Channel structure and access capacity.
- Communication protocol between MS and BSS.
- Maintenance and operation features.
- Performance features.
- Service features.

II. Um interface protocol model

Um interface protocol stack is in 3 layers, as shown in Figure 1-3.

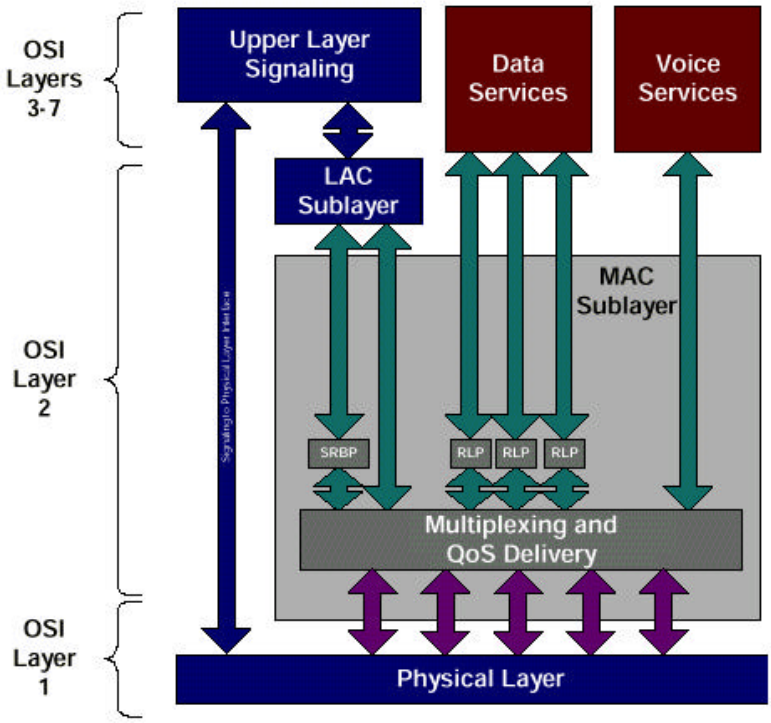

Figure 1-3 Um interface layered structure

Layer 1 is the physical layer, that is, the bottom layer. It includes various physical channels, and provides a basic radio channel for the transmission of higher layer information.

Layer 2 is the data link layer, including Medium Access Control (MAC) sublayer and Link Access Control (LAC) sublayer. The MAC sublayer performs the mapping between logical channels and physical channels, and provides Radio Link Protocol (RLP) function. The LAC sublayer performs such functions as authentication, Automatic Repeat Request (ARQ), addressing and packet organization.

Layer 3 is the top layer. It performs Radio Resource Management (RM), Mobility Management (MM) and Connection Management (CM) through the air interface.

III. Physical layer

1) Working band

Band	Forward band	Reverse band	Duplex spacing	Channel width	Carrier spacing
450MHz	460 - 470MHz	450 - 460MHz	10MHz	1.23 MHz	1.25 MHz
800MHz	869 - 894 MHz	824 - 849 MHz	45MHz	1.23 MHz	1.23 MHz

2) Physical layer function

- Service bearer: the physical channel in the physical layer provides bearer for the logical channel of the higher layer.
- Bit error check: the physical layer provides transmission service with error protection function, including error checking and error correction.
- User identification: the physical layer provides an exclusive ID for every user by code division.

3) Radio configuration

The physical layer supports multiple Radio Configurations (RCs). Different RCs support different traffic channel data rates. For detailed introduction, please refer to Section 3.4.3 Radio Configuration and Channel Support.

IV. Data link layer

Data link layer at Um interface includes two sublayers, MAC and LAC. The purpose of introducing MAC and LAC is to:

- Support higher level services (signaling, voice, packet data and circuit data).
- Support data services of multiple rates.
- Support packet data service and circuit data service of higher quality (QoS).
- Support multi-media service, that is, processing voices, packet data and circuit data of different QoS levels at the same time.

1) MAC sublayer

To support data service and multi-media service, cdma2000 1X provides powerful MAC layer to ensure the reliability of services. MAC layer provides two important functions:

- Radio Link Protocol (RLP), ensuring reliable transmission on the radio link.
- Multiplex function and QoS function, with diversified services and higher service quality.

2) LAC sublayer

LAC layer performs such functions as Automatic Repeat Request (ARQ), authentication and addressing.

V. Layer 3

The higher layer signaling performs the functions such as radio resource management, mobility management and call connection management on air interface.

1) Radio resource management

The radio resource management functions include:

- Radio channel management

It is used to establish, operate and release radio channels, and help to realize soft handoff, softer handoff and hard handoff.

- Power control

Various power control technologies are used on Um interface to reduce the system interference and improve the system capacity.

2) Mobility management

It is used to support the mobility features of the mobile subscriber, performing such functions as registration, authentication and Temporary Mobile Subscriber Identity (TMSI) re-allocation.

3) Connection management

It is used to setup, maintain and terminate calls.

1.4.2 Abis Interface

I. Overview

Abis interface is defined as the interface between BSC and BTS, the two functional entities in the Base Station Subsystem (BSS). It is the interface defined for BTS accessing BSC via the terrestrial link.

1) Structure of Abis interface

Abis interface consists of three parts: Abis traffic, Abis signaling and OML signaling, as shown in Figure 1-4.

Abis traffic is the interface connecting SDU of BSC and the CEs of BTS. It is used to bear user traffic.

Abis signaling is the interface connecting SPU of BSC and the MC of BTS, It is used to control the cell setup, transmission of messages over paging channels and access channels, and call setup & release.

OML signaling is used to perform operation and maintenance. It is defined by equipment manufacturers. On Abis interface, there is a transparent channel used to bear OML between OMC and OMU of BTS.

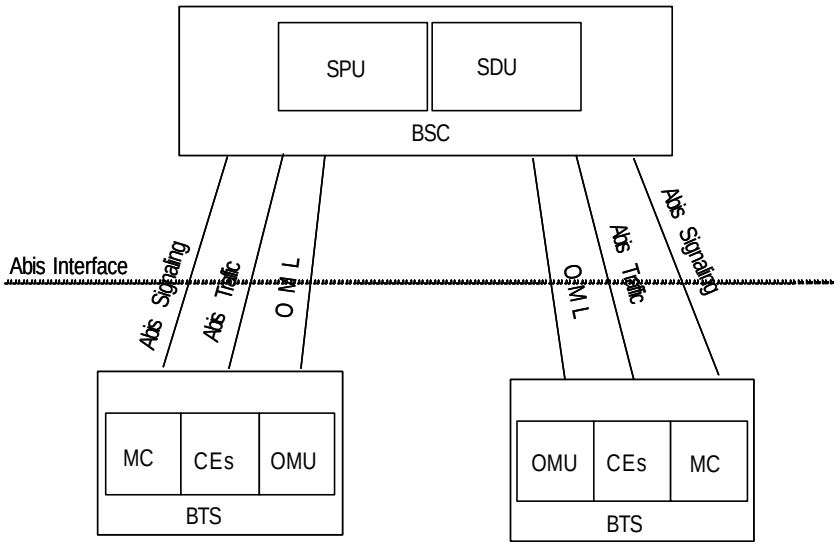

SPU: Signaling Processing Unit
SDU: Selection/Distribution Unit
MC: Main Control unit
CEs: Channel Elements
OMU: Operation and Maintenance Unit

Figure 1-4 Composition of Abis interface

📖 **Note:**

The CFMR (CDMA radio frame process (FP MAC RLC) board) board of BSC carrys out the SDU function, and the CSPU (CDMA Signal Process Unit) board of BSC carrys out the SPU function, the MBPB board of BTS3601C carrys out the MC, CEs and OMU fouctions.

---

2) Protocol stack of Abis interface

The protocol stack used by Abis signaling and the signaling for operation & maintenance is as follows:

Abis Signaling Application/OAM Application
TCP
IP
AAL5
ATM
Physical Layer

Protocol stack used by Abis traffic is as follows:

Abis Traffic
SSSAR
AAL2
ATM
Physical Layer

II. Physical layer

The physical layer of Abis interface can use E1 interface or STM-1 interface.

Each BTS3601C has an E1 link connected with BSC. It realizes transmission through the ATM User Network Interface (UNI) protocol. Namely, it maps ATM cells to the T1/E1 frame to implement transmission.

III. Data link layer

ATM is used on the data link layer of Abis interface.

Adaptation of Abis signaling is performed based on AAL5, and is borne in IP Over ATM (IPoA) mode. At Abis interface, Abis signaling path connects the Main Control (MC) software and Signaling Processing Unit (SPU) of BSC via Permanent Virtual Connection (PVC) to transmit Abis signaling. The signaling transmission path for implementing related O&M operations is also borne by a PVC connecting the Operation and Maintenance Unit (OMU) of BTS and BSC. The BSC forwards the signaling to OMC transparently, and does not process any O&M signaling.

Adaptation of Abis traffic is performed based on AAL2. At Abis interface, several PVCs are used to connect the channel processing unit of BTS and SDU of BSC, for BTS to transmit the uplink data received from the air interface to BSC, and for BSC to transmit the downlink data to be transmitted via the air interface to BTS.

IV. Layer 3 - traffic management

At Abis interface, Abis signaling, OML signaling and Abis traffic are in the domain of traffic management. Specifically, Abis traffic management includes the following functions:

1) BTS logic O&M function

- Resource status indication: With this function, BTS requests logic configuration from BSC, reports logic status to BSC and checks logic resource regularly.
- Cell configuration: With this function, BSC configures logic parameters of cells for BTS, including cell pilot Pseudo Noise (PN) offset, sector gain, common channel number and parameter.

- Overhead message updating: With this function, BSC configures or update overhead message to BTS.
- Cell breath control function.
- Cell blocking function.
- Radio measurement report function.

2) Common channel management function

Paging channel management procedure: It is used to transmit paging channel messages from BSC to MSs through Abis interface.

Access channel management procedure: It is used to transmit access channel messages received on the access channel of BTS to BSC through Abis interface.

3) Dedicated channel setup and release function

This procedure is used to control the setup and release of dedicated radio channel and Abis interface terrestrial channel.

Abis interface supports the setup and release of various dedicated channels specified in IS95A/B and cdma2000 1X, including IS95-FCH, IS95-SCCH, IS2000-FCH, IS2000-DCCH and IS2000-SCH.

Each radio channel is allocated with one AAL2 link on Abis interface to bear user traffic data.

Caution:

For softer handoff, only one AAL2 link is allocated on Abis interface.

---

4) Traffic channel bearing function

BTS needs to process Abis interface frame protocol. It transmits the data received from the reverse traffic channel on the air interface to BSC, and transmits the data from BSC through the forward traffic channel on the air interface.

Traffic channel bearing procedure also performs the functions such as AAL2 traffic matching, time adjustment of traffic data frame, reverse outer loop power control adjustment and forward power control adjustment.

5) Power control function

Abis interface supports various power controls. Power control is performed through parameter configuration. Power control falls into four types: quick forward closed-loop power control, slow forward closed-loop power control, quick reverse closed-loop power control and reverse open-loop power control.

1.4.3 Other Interface

I. ODU3601C interface

This interface is located between the Micro-bts Transceiver Module (MTRM) of BTS3601C and the MTRM of ODU3601C. It transmits baseband data through optical fibers (including service information and operation & maintenance information) so that BTS3601C can control the ODU3601C.

II. OML interface

OML interface is between BTS and remote OMC. It is actually one of the Abis interface applications. But on the application layer, OML interface is between BTS and the remote OMC. OML interface shares resources with Abis interface, including physical layer, ATM, AAL5 and TCP/IP. For details, please refer to the introduction to Abis interface.

OML interface is used for OMC to perform operation and maintenance to BTS. It is defined by equipment manufacturers. On Abis interface, it is a transparent path.

III. LMF interface

LMF interface is the interface between BTS and Local Maintenance Function (LMF) entity. Its interface protocol stack is shown as below:

LMF Signaling Application (self-defined)
TCP
IP
Data Link Layer
Physical Layer (10/100 Base-T)

IV. System synchronization interface

System synchronization interface includes GPS/GLONASS antenna interface and system external synchronization interface.

- GPS/GLONASS antenna interface

GPS is in compliance with *ICD200c: IRN-200C-001-IRN-200C-004*: *Interface Control Document of GPS*. GLONASS is in compliance with *GPS/GLONASS Receiver Interface Language (GRIL)*.

- System external synchronization interface

The external synchronization interface is used when GPS/GLONASS is not applied. It is in compliance with the requirement of *CDMA Digital Cellular Mobile Communication*

Network GPS/GLONASS Dual-Mode Receiver and Base Station Interface Specifications.

V. Test interface

The test interface provides 10MHz and 2s signals that may be needed for test instruments.

VI. Power supply interface

BTS3601C supports 220V AC power supply. It provides external 220V AC interface and 24V DC battery interface.

1.5 Reliability Design

Reliability design of a system is shown in the stability and reliability of the product during operation.

Huawei BTS3601C is designed based on the following standards:

- *TIA/EIA/IS-95A CDMA Radio Interface Specifications*
- *TIA/EIA/IS-95B CDMA Radio Interface Specifications*
- *TIA/EIA/IS-2000 CDMA Radio Interface Specifications*
- *TIA/EIA/IS-97D CDMA Base Station Minimum Performance Standard*
- *Huawei product reliability design index and related technical specifications*

With various measures taken, the design of boards is in strict accordance with the requirement of above standards pertaining to reliability.

1.5.1 Hardware Reliability Design

I. De-rating design

To improve system reliability and prolong the service life of components, components are carefully selected and strictly tested, and less stress (electrical stress and temperature stress) is to be borne in actual operation than its designed rating.

II. Selection and control of component

The category, specifications and manufacturers of the components are carefully selected and reviewed according to the requirements of the product reliability and maintainability. The replaceability and normalization of components is one of the main factors for the decision, which help to reduce the types of components used and hence improve the availability of the system.

III. Board level reliability design

Many measures have been taken in board design to improve its reliability. Redundancy configuration is applied for key components to improve system reliability.

- Key circuits are designed by Huawei, which lays the foundation of high reliability.
- The hardware WATCHDOG is equipped for the board, and the board can automatically reset in case of fault.
- The board is provided with the functions of over-current and over-voltage protection and the function of temperature detection.
- Strict thermal analysis and simulation tests are conducted during the design of boards for the purpose of ensuring longtime operation.
- The board software and important data is stored in the non-volatile memory, so that the board can be restarted when software upgrading fails.

IV. Fault detection, location and recovery

The BTS system is equipped with the functions of self-detection and fault diagnosis that can record and output various fault information. Common software and hardware faults can be corrected automatically.

The hardware fault detection functions include fault locating, isolating and automatic switchover. The maintenance engineers can identify the faulty boards easily with the help of the maintenance console.

The BTS3601C system also supports the reloading of configuration data files and board execution programs.

V. Fault tolerance and exceptional protection

When faults occur, the system usually will not be blocked.

The system will make a final confirmation on a hardware fault through repeated detection, thus avoiding system reconfiguration or QoS deterioration due to contingent faults.

VI. Thermal design

The influence of temperature on the BTS3601C has been considered in the design.

Thermal design primarily concerns the selection of components, circuit design (including error tolerance, drift design and derating design), structure design and heat dissipation, so that the BTS3601C can work reliably in a wide range of temperatures.

The first consideration in thermal design is to balance the heat distribution of the system. Corresponding measures are taken in the place where heat is more likely to be accumulated.

VII. Maintainability

The purpose of maintainability design is to define the workload and nature of the maintenance, so as to cut the maintenance time. The main approaches adopted include standardization, modularization, error prevention, and testability improvement, which can simplify the maintenance work.

VIII. EMC design

The design ensures that BTS3601C will not degrade to an unacceptable level due to the electromagnetic interference from other equipment in the same electromagnetic environment. Neither the BTS3601C will cause other equipment in the same electromagnetic environment to degrade to an unacceptable level.

IX. Lightning protection

To eliminate the probability of lightning damage on the BTS3601C system, proper measures are taken with respect to the lightning protection for DC power supply, BTS trunk lines and antenna & feeder system. For details, please refer to "3.6 Lightning Protection".

1.5.2 Software Reliability Design

Software reliability mainly includes protection performance and fault tolerance capability.

I. Protection performance

The key to improve software reliability is to reduce software defects. Software reliability of BTS3601C is ensured through the quality control in the whole process from system requirement analysis, system design to system test.

Starting from the requirement analysis, software development process follows the regulations such as Capability Mature Mode (CMM), which aim to control faults in the initial stage.

In software design, much attention is devoted to the designing method and implementation: the software is designed in a modular structure, and in a loose coupling mechanism. When a fault occurs to one module, other modules will not be affected. In addition, preventive measures such as fault detection, isolating and clearing are also applied to improve the system reliability. Other effective methods include code read-through, inspection, and unit test.

Various software tests are conducted to improve the software reliability. Test engineers participate the whole software development process, from unit test to

system test. They make plans strictly following the demand of the upper-level flow, which ensure the improvement of software reliability. Additionally, test plans are modified and improved with the tests.

II. Fault tolerance capability

Fault tolerance capability of the software system means that the whole system would not collapse when a minor software fault occurs. That is, the system has the self-healing capability. The fault tolerance of BTS3601 software is represented in the following aspects:

- All boards work on a real-time operating system of high reliability.
- If software loading fails, the system can return to the version that was successfully loaded last time.
- Important operations are recorded in log files.
- Different authority levels are provided for operations, so as to prevent users from performing unauthorized operations.
- Warnings are given for the operations that will cause system reboot (such as reset operation). The operator is required to confirm such operations.

Chapter 3 System Function

3.1 Call Procedure Introduction

Call procedure includes speech service call procedure and data service call procedure. This section gives some typical examples to introduce the MS call procedures.

3.1.1 Speech Service Call Procedure

I. Mobile-Originated Call (MOC)

MOC procedure is illustrated in Figure 3-1.

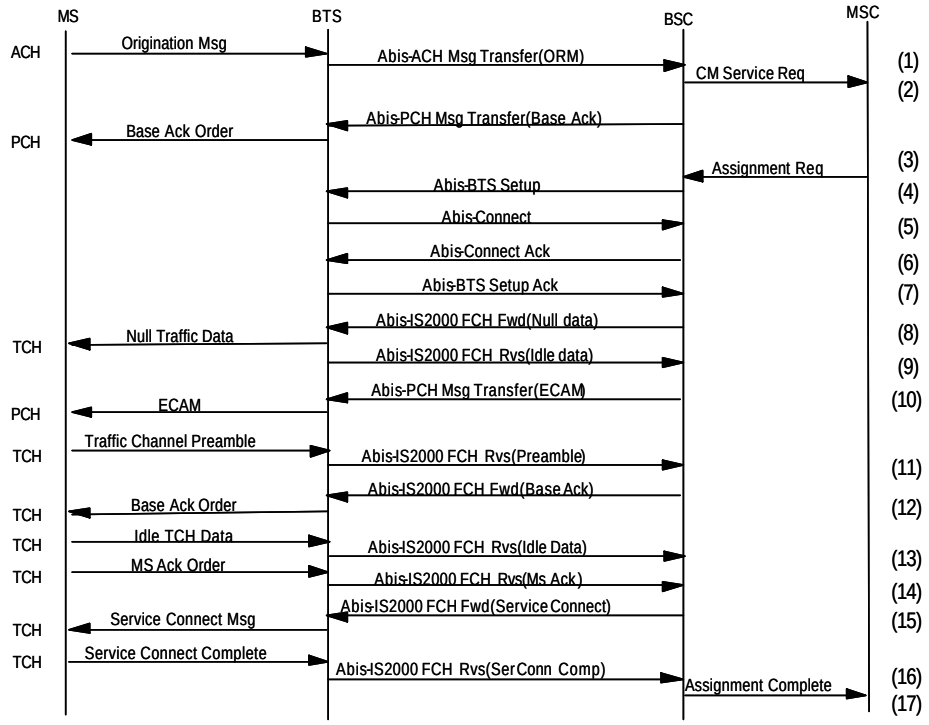

Figure 3-1 MOC procedure

1) MS sends "Origination Message" on access channel. After receiving the message, BTS sends "Abis-ACH Msg Transfer" message to BSC.
2) BSC sends "CM Service Request" message to MSC to request service assignment. Meanwhile, BSC sends "BS Ack Order" to BTS via "Abis-PCH Msg Transfer" message. BTS sends "BS Ack Order" on paging channel to the MS.

3) MSC sends "Assignment Request" message to BSC to request BSS to assign radio resources.
4) BSC sends "Abis-BTS Setup" message to BTS to request BTS to allocate radio resources for the call.
5) BTS sends "Abis-Connect" message to BSC for establishing Abis service connection.
6) BSC sends "Abis-Connect Ack" to BTS in response to the "Abis-Connect" message.
7) After resources allocation, BTS sends "Abis-BTS Setup Ack" message to BSC.
8) BSC sends "Abis-IS2000 FCH Fwd" message to BTS, and orders BTS to send null frame to MS on forward traffic channel.
9) After receiving "Abis-IS2000 FCH Fwd" message, BTS sends idle frame to BSC via "Abis-IS2000 FCH Rvs" message, and performs Abis link delay adjustment.
10) BSC sends channel assignment message to BTS via "Abis-PCH Msg Transfer" message. BTS forwards the channel assignment message to MS on paging channel.
11) MS begins to send traffic channel preamble on the assigned reverse traffic channel. After BTS captures the preamble, it sends traffic channel preamble to BSC via "Abis-IS2000 FCH Rvs" message.
12) After BSC receives traffic channel preamble from MS, BSC sends "BS Ack Order" to BTS via "Abis-IS2000 FCH Fwd" message. BTS sends "BS Ack Order" to MS on the forward traffic channel.
13) After MS receives "BS Ack Order", it stops sending traffic channel preamble and starts to send data frame on reverse traffic channel.
14) Then MS sends "MS Ack Order" on reverse traffic channel to BTS. BTS forwards the message to BSC via "Abis-IS2000 FCH Rvs" message.
15) On receiving "MS Ack Order", BSC sends "Service Connect" message to BTS via "Abis-IS2000 FCH Fwd" message, then BTS forwards the message to MS. MS starts to handle the traffic according to the designated service configuration.
16) To respond to service connection message, MS sends "Service Connect Complete" message.
17) On receiving the "Service Connect Complete" message, BSC sends "Assignment Complete" message to MSC.

II. Mobile-Terminated Call (MTC)

MOC procedure is shown in Figure 3-2.

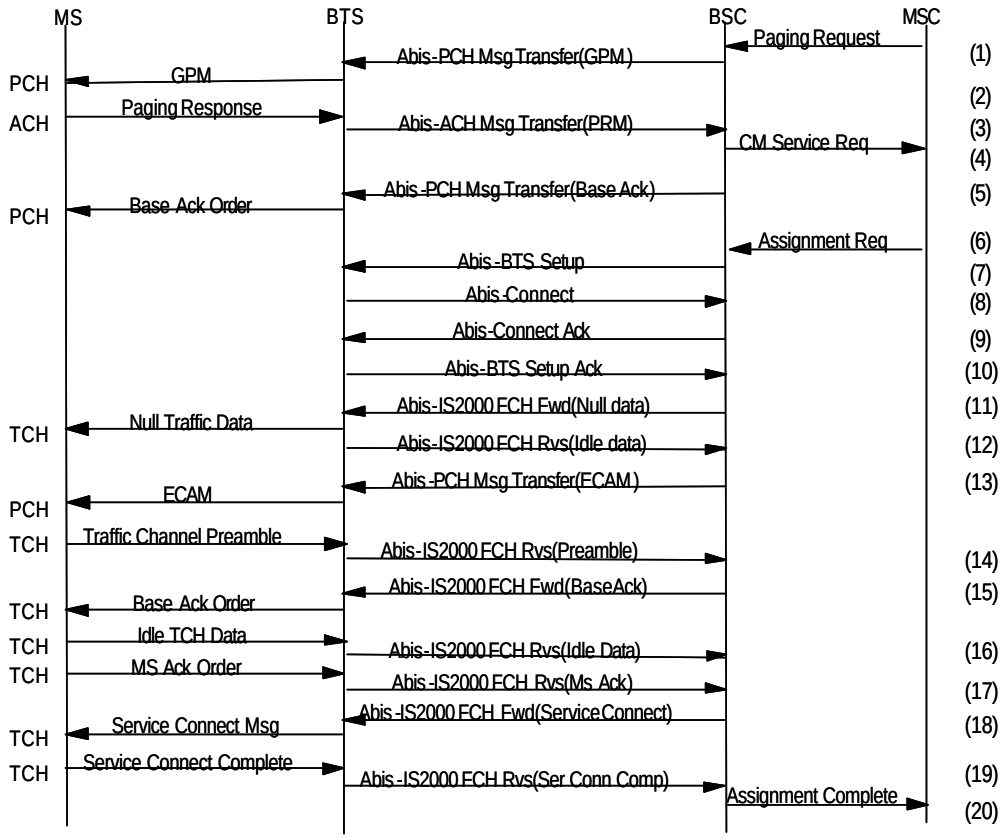

Figure 3-2 MOC procedure

1) MSC sends "Paging Request" to BSC.
2) BSC constructs General Paging Message (GPM), embeds it into "Abis-PCH Msg Transfer" message, then sends it to BTS. BTS forwards the GPM on the paging channel.
3) After MS receives paging message, it sends Paging Response Message (PRM) to BTS. BTS forwards it to BSC in "Abis-ACH Msg Transfer" message.
4) BSC sends "CM Service Request" message to MSC to request service assignment.
5) BSC sends "BS Ack Order" to BTS via "Abis-PCH Msg Transfer" message. BTS sends the "BS Ack Order" on the paging channel.
6) MSC sends assignment request message to BSC to request BSS to allocate radio resources.
7) BSC sends "Abis-BTS Setup" message to BTS to request BTS to allocate radio resource for the call.
8) BTS sends "Abis-Connect" message to BSC for establishing Abis service connection.
9) BSC sends "Abis-Connect Ack" to BTS in response to "Abis-Connect" message.
10) BTS completes resource allocation, and sends "Abis-BTS Setup Ack" message to BSC.

11) BSC sends "Abis-IS2000 FCH Fwd" message to BTS to request BTS to send null frame to MS.
12) After receiving "Abis-IS2000 FCH Fwd" message, BTS sends null frame to BSC via "Abis-IS2000 FCH Rvs" message, and performs Abis link delay adjustment.
13) BSC sends channel assignment message to BTS via "Abis-PCH Msg Transfer" message. BTS forwards the message to MS on paging channel.
14) MS begins to send traffic channel preamble on the assigned reverse traffic channel. After capturing the preamble, BTS sends traffic channel preamble to BSC via "Abis-IS2000 FCH Rvs" message.
15) After BSC receives the traffic channel preamble sent from MS, it sends "BS Ack Order" to BTS via "Abis-IS2000 FCH Fwd" message. BTS forwards the order to MS over the forward traffic channel.
16) After MS receives "BS Ack Order", it stops sending traffic channel preamble and starts sending data frame.
17) After MS receives "BS Ack Order", it sends "MS Ack Order" to BTS. BTS forwards the order to BSC via "Abis-IS2000 FCH Rvs" message.
18) After BSC receives "MS Ack Order", it sends service connection message to BTS via "Abis-IS2000 FCH Fwd" message. BTS forwards the message to MS, and then MS starts to handle the service according to the designated service configuration.
19) To respond to service connection message, MS sends "Service Connect Complete" message.
20) After BSC receives the "Service Connection Complete" message, it sends "Assignment Complete" message to MSC.

3.1.2 Data Service Call Procedure

I. Mobile originated data service

The mobile originated data service procedure is shown in Figure 3-3. In the figure, the BSS represents BTS and BSC.

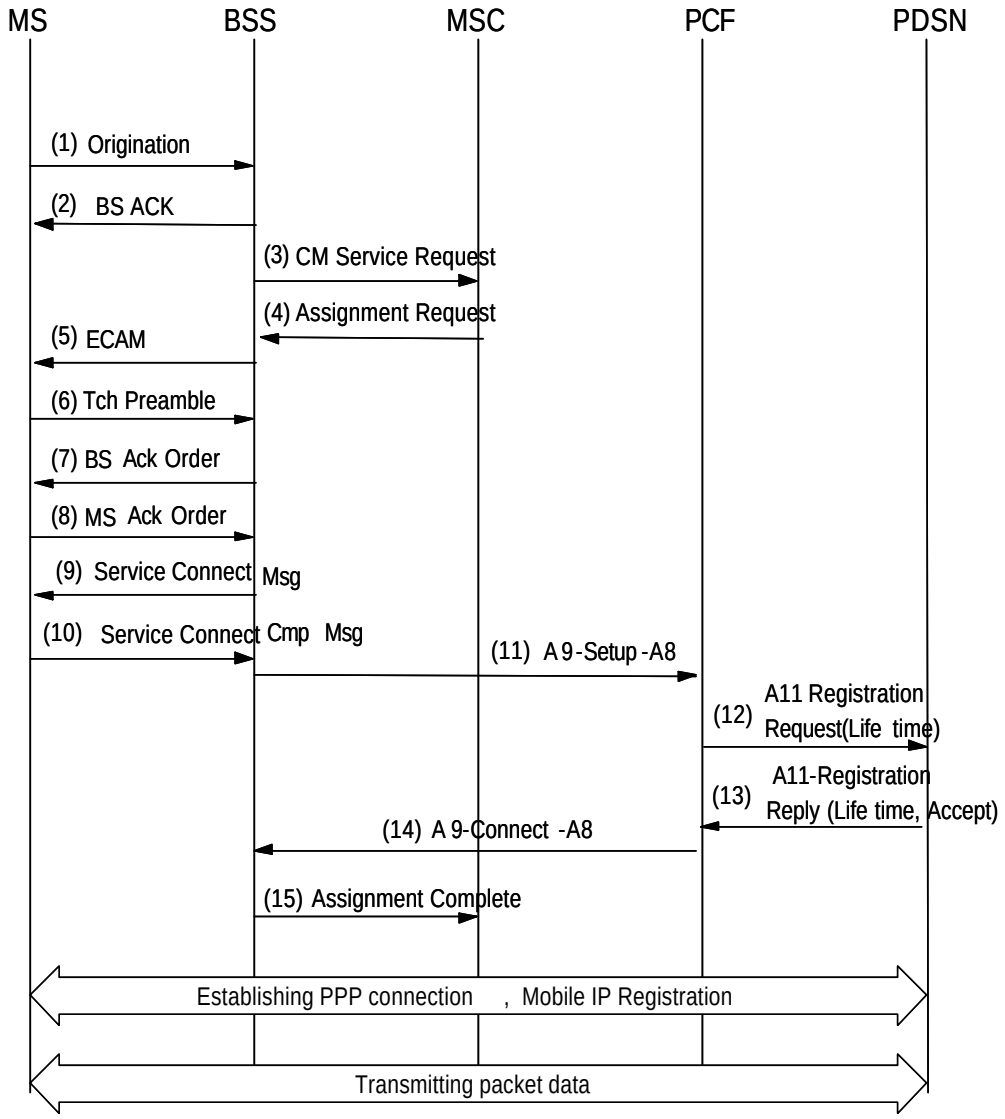

Figure 3-3 Mobile originated data service procedure

1) MS sends "Origination" message to BTS via the access channel on air interface.
2) After BTS receives the "Origination message", it sends "BS Ack Order" to MS.
3) BSC constructs a "CM Service Request" message and sends it to MSC.
4) MSC sends "Assignment Request" message to BSC to request BTS to assign radio resources.
5) BTS sends channel assignment message over the paging channel of air interface.
6) MS begins to send preamble in the assigned reverse traffic channel.
7) After acquiring the reverse traffic channel, BTS sends "BS ACK Order" to MS in the forward traffic channel.
8) After receiving "BS ACK Order", MS sends "MS ACK Order", and transmits the null service frame in the reverse traffic channel.

9) BTS sends service connection message/service selection response message to MS, and designates the service configuration used for the call. MS starts to handle the service according to the designated service configuration.
10) After receiving service connection message, MS responds with one Service Connect Complete" message.
11) BSC sends “A9-Setup-A8” message to PCF for establishing A8 connection.
12) PCF sends “A11-Registration-Request” to PDSN for establishing A10 connection.
13) PDSN accepts A10 connection establishment request, and returns “A11-Registration-Reply” message to PCF.
14) PCF returns “A9-Connect-A8” message to BSC. Connection between A8 and A10 is established.
15) After both radio traffic channel and terrestrial circuit are established, BSC sends "Assignment Complete" message to MSC.
16) MS negotiates with PDSN to establish PPP connection. In the case of Mobile IP access, Mobile IP connection will be established. PPP message and Mobile IP message are transmitted in traffic channel, and are transparent to BSC/PCF.
17) After PPP connection is established, the data service enters "connected" status.

II. SCH establishment

This section describes establishment procedure of MS-originated Supplemental Channel (SCH). The BSC-originated SCH establishment procedure is similar, and only differs in the trigger condition.

There is no special SCH release procedure in the case of dynamic SCH allocation. Instead, BSC determines SCH rate and duration. Once the time is due, SCH will be released.

MS-originated SCH establishment procedure is shown in Figure 3-4.

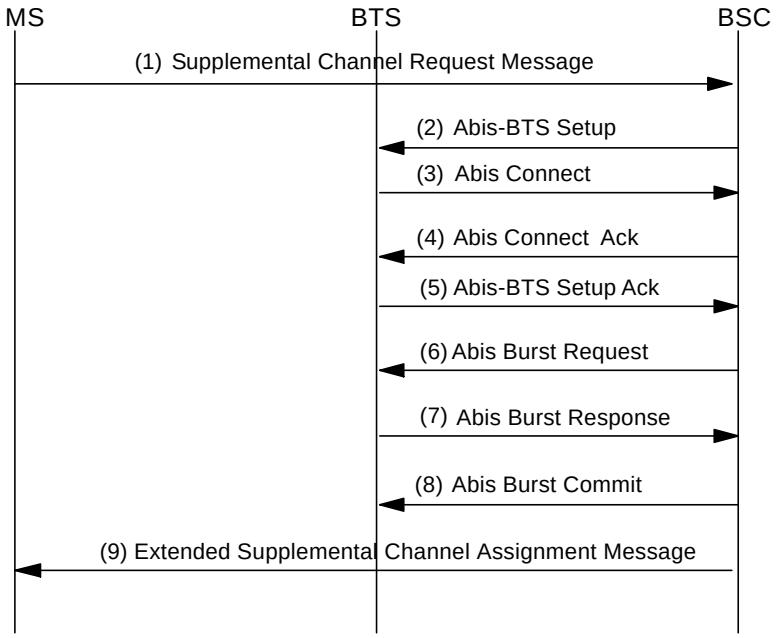

Figure 3-4 Reverse SCH establishment procedure

1) If the packet data call is established, MS may send "Supplemental Channel Request Message" to BSC for establishing SCH channel.
2) BSC sends "Abis-BTS Setup" to BTS for allocating radio resource for the call.
3) After BTS establishes the channel, it sends "Abis Connect" to BSC.
4) BSC responds with "Abis Connect Ack" to BTS.
5) After BTS establishes all of the channels, it sends "Abis-BTS Setup Ack" to BSC, indicating the completion of terrestrial circuit establishment.
6) BSC sends "Abis-Burst Request" to BTS for activating BTS.
7) BTS responds "Abis-Burst Response" message to BSC.
8) BSC sends "Abis-Burst Commit" to BTS, and BTS starts to transmit SCH.
9) BSC sends "Extended Supplemental Channel Assignment Message" and assigns SCH channel for MS, so that the packet data service can be transmitted at high speed in SCH channel.

3.2 Signaling Processing

BTS signaling processing serves to:

- Implement interconnection of MS and BSS/CN on the air interface layer.
- Perform part of radio resource management function under the control of BSC.

Specifically, BTS signaling processing performs the following functions: signaling processing on Abis physical layer and transmission layer, channel resource management, Abis traffic link management, BTS logic O&M processing, common channel processing, dedicated channel establishment and release, traffic bearing and power control.

I. Functions of physical layer and transmission layer on Abis interface

The physical layer of Abis interface adopts ATM UNI technology. The configuration of User-to-Network Interface (UNI) is completed at the BTS that also provides the timeslot configuration function.

Data link layer of Abis interface utilizes ATM. Signaling is adapted with AAL5 and traffic is adapted with AAL2.

II. Channel resource management

BTS organizes channel resources with a resource pool. It is responsible for the allocation, release and management of the channel resources.

III. Abis traffic link management

BTS is responsible for assigning traffic link on Abis interface.

IV. BTS logic O&M functions

BTS provides the following logic O&M functions:

- Resource status indication
- Cell configuration function
- Overhead message updating
- Cell breath control function
- Cell block/unblock function
- Radio measurement report function

V. Common channel processing

BTS is responsible for the establishment and release of common channels and processing of common channel messages. The common channels include paging channel, access channel, etc.

VI. Establishment and release of dedicated channel

BTS is also responsible for the establishment and release of dedicated channels.

VII. Traffic bearing

BTS processes Abis interface protocol, transmits the traffic channel data received from the air interface to BSC, and transmits the traffic data that received from BSC on the air interface.

VIII. Power control

Coordinating with the MS and BSC, BTS provides various power control mechanisms (as detailed in Section 3.4.1 Power Control).

3.3 Baseband Processing

Baseband processing performs physical layer functions on Um interface, and processes baseband data of all full-duplex channels in CDMA system.

In the forward direction (transmitting direction), baseband processing fulfills channel coding, rate adaptation, interleaving, spreading spectrum and modulation. In the reverse direction (receiving direction), it fulfills multi-path signaling demodulation, de-interleaving, channel decoding and information bit extraction.

For different Radio Configuration (RC), baseband processing is different. But basically it can be summarized into the following procedures:

I. Forward channel baseband processing

In CDMA forward channel, the baseband processing of one traffic channel includes channel coding, rate adaptation, block interleaving, long code scrambling, power control bit insertion, Walsh code spreading spectrum, signal modulation and baseband filtering, as shown in Figure 3-5.

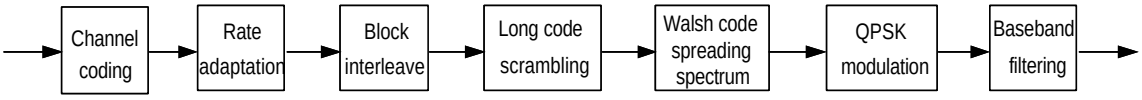

Figure 3-5 Baseband processing in forward channel

- Channel coding

CDMA system uses Convolutional code and Turbo code for channel coding. Its function is error correction. Convolutional code is used for ordinary speech service and Turbo code for high-speed data service.

- Rate adaptation

Since the system supports frames of different rates. The frame rates after channel coding are different. Rates should be adapted to ensure that the rate of frames meets the requirement before entering the interleaver. In CDMA system, rate adaptation is realized by symbol repetition and code puncturing.

- Block interleaving

The purpose of interleaving is to resist fast fade in the radio channel environment.

- Long code scrambling

In the forward channel, long code scrambling is used to scramble the user data to provide encryption function.

- Walsh code spreading spectrum

In the forward channel, Walsh code is used to identify each user.

- QPSK modulation

Quadrature Phase Shift Keying (QPSK) modulation is used in the forward channel. PN short code is used in the modulation for scrambling and providing cell ID.

- Baseband filtering

This process implements pulse shaping without inter-code interference and the suppression of out-band signals.

II. Reverse channel baseband processing

Baseband processing in the reverse channel includes multi-path signal demodulation, signal de-interleaveing, channel decoding, and extraction of frame information data, as shown in Figure 3-6.

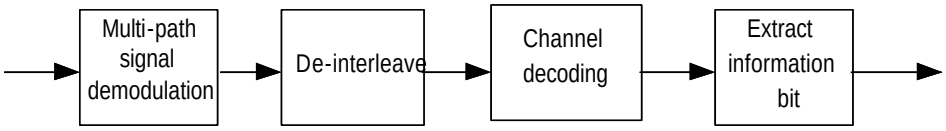

Figure 3-6 Baseband processing in reverse channel

- Multi-path demodulation

With Rake receiver, BTS can demodulate the radio multi-path signals and effectively combine multi-path energy.

- De-interleaving

Signals received from MS are interleaved signals, so de-interleaving must be performed by BTS to restore the signals.

- Channel decoding

MS uses convolutional code or Turbo code for channel encoding before transmission, while BTS decodes with Viterbi decoder or Turbo decoder at the receiving end based on the channel code type of the MS.

- Extraction of frame information data

When transmitting signals, MS adds Cyclic Redundancy Check (CRC) bits and a number of all-zero tail bits at the end of the information bits to compose a transmitting frame. On receiving the frame, BTS performs CRC check and removes the non-information bit (CRC check bit and end bit) to get the information bits, then sends them to the higher layer for processing.

3.4 Radio Resource Management

BTS radio resource management functions meet the requirements of TIA/EIA IS-97-D protocol.

3.4.1 Power Control

CDMA system is a self-interferenc system, in which every subscriber is an interference source to other subscribers. If it is possible to ensure that every MS transmits the minimum power it needs, the whole system capacity can be the largest. Therefore, power control directly affects the system capacity and the service quality.

I. Purpose

Power control is to

- Ensure conversation quality, meanwhile restrict the transmitting power on the forward and reverse links, thus minimizing the system interference.
- Overcome the far-near effect caused by the freely distributed mobile stations, so the signals of mobile stations whose distances to the BTS are different can reach the BTS with the same power.
- Realize the system soft capacity control.
- Prolong MS battery life.
- Minimize MS radiation to the human body.

II. Types

Power control can be divided into forward power control and reverse power control. The forward power control is used to control BTS' s transmit power, while the reverse power control aims to control MS' s transmit power.

1) Forward power control

Forward power control can be implemented with various methods, whose applications are subject to the MS protocol version and the system parameters.

- Power control based on Power Measurement Report Message (PMRM)

In PMRM-based power control, the MS determines the method and frequency of reporting PMRM in accordance with the received control message in the system parameter message.

- Power control based on Erasure Indicator Bit (EIB)

In EIB power control, the MS detects the forward frame quality, and feeds back the information to the BTS via EIB. The BTS will adjust the transmit power according to EIB information.

- Quick forward power control

In this mode, the BTS power is adjusted according to power control bit from the MS (the maximum speed can reach 800bit/s). In cdma2000 1X system, large data service is supported. Therefore, the requirement on forward power control is increasingly strict. The forward quick power control method can control forward channel transmit power accurately, so as to reduce the interference and improve the capacity.

2) Reverse power control

Reverse power control includes open-loop power control and closed-loop power control. The closed-loop power control can be sub-divided into inner loop power control and outer loop power control.

- Open-loop power control method

The MS determines the transmit power intensity to access the BTS according to the received pilot signal strength.

- Closed-loop power control method

The BTS issues power control command to the MS, and performs the adjustment according to MS feedback. The principle of closed-loop power control is shown in the following figure.

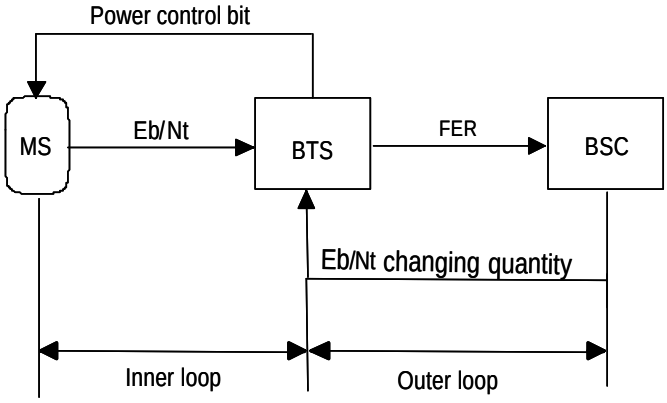

Figure 3-7 Closed-loop power control

Inner loop power control: The BTS issues power control bit according to the received Eb/Nt.

Outer loop power control: The BSC adjusts the Eb/Nt setting value according to the Frame Error Rate (FER) of the received reverse signal. Then the BTS uses the newly set Eb/Nt value to issue power control bit, thus the purpose of indirectly controlling the MS power is achieved.

3.4.2 Handoff

I. Types

The handoff can be divided into the following three types according to the handoff procedures.

- Hard handoff

The MS firstly disconnect the connection with the previous BTS, then sets up the connection with the new BTS.

- Soft handoff

When the MS establishes the communication with a new BTS, it will not release the connection with the previous BTS.

- Softer handoff

It is the soft handoff occurred among different sectors in the same BTS.

II. Purpose

With respect to the purpose, the handoff can be divided into three types: rescue handoff, better cell handoff and traffic handoff.

- Rescue handoff

When the MS is leaving the cell coverage area and the conversation quality is unacceptable, the handoff occurs in order to avoid the interruption of the call.

- Better cell handoff

If the rescue handoff condition is not triggered, this handoff may occur if conversation quality or network performance can be improved. The handoff is called better cell handoff because there is better cell for the call.

- Traffic handoff

This kind of handoff occurs when one cell is congested due to its heavy load and the adjacent cell is relatively idle. This mainly results from traffic peak within short time in a limited area due to some special events (such as sports game, exhibition, etc).

3.4.3 Radio Configuration and Channel Support

I. Radio Configuration (RC)

Um interface supports cdma2000 1X, and is compatible with IS-95A/B. The spreading rate is 1.2288Mcps.

The cdma2000 1X physical layer supports multiple radio configurations. Each radio configuration supports the frames of the different rate sets, and possesses different

channel configurations and spreading spectrum structures. The supported transmission combinations include:

- Forward RC1, and reverse RC1;
- Forward RC2, and reverse RC2;
- Forward RC3 or RC4, and reverse RC3;
- Forward RC5, and reverse RC4.

With different RCs, cdma2000 1X presents different capabilities. RC1 and RC2 are compatible with IS-95A/B.

Each RC supports certain traffic channel data rate. The specific data rates are listed in Table 3-1 and Table 3-2.

Table 3-1 Forward channel rates

Channel type		Channel rate (bit/s)
F-SYNCH		1200
F-PCH		9600, or 4800
F-QPCH		4800, or 2400
F-DCCH	RC3 or RC4	9600
	RC5	14400 (20ms frame) or 9600 (5ms frame)
F-FCH	RC1	9600, 4800, 2400, or 1200
	RC2	14400, 7200, 3600, or 1800
	RC3 or RC4	9600, 4800, 2700, or 1500 (20ms frame), or 9600 (5ms frame)
	RC5	14400, 7200, 3600, or 1800 (20ms frame), or 9600 (5ms frame)
F-SCCH	RC1	9600
	RC2	14400
F-SCH	RC3	153600, 76800, 38400, 19200, 9600, 4800, 2700,or 1500 (20ms frame)
	RC4	307200, 153600, 76800, 38400, 19200, 9600, 4800, 2700,or 1500 (20ms frame)
	RC5	230400, 115200, 57600, 28800, 14400, 7200,3600, or 1800

Table 3-2 Reverse channel rates

Channel type		Channel rate (bit/s)
R-ACH		4800
R-DCCH	RC3	9600
	RC4	14400 (20ms frame) or 9600 (5ms frame)
R-FCH	RC1	9600, 4800, 2400, or 1200
	RC2	14400, 7200, 3600, or 1800
	RC3	9600, 4800, 2700, or 1500 (20ms frames), or 9600 (5ms frame)
	RC4	14400, 7200, 3600, or 1800 (20ms frames), 9600 (5ms frame)
R-SCCH	RC1	9600
	RC2	14400
R-SCH	RC3	307200,153600, 76800, 38400, 19200, 9600, 4800, 2700, or 1500 (20ms frame)
	RC4	230400, 115200, 57600, 28800, 14400, 7200, 3600, or 1800

II. Physical channel configuration

On Um interface is defined series of physical channels, which are divided into different types according to the channel features. Different RCs support different channels.

1) Forward physical channel

The configuration of forward physical channel is shown in Figure 3-8.

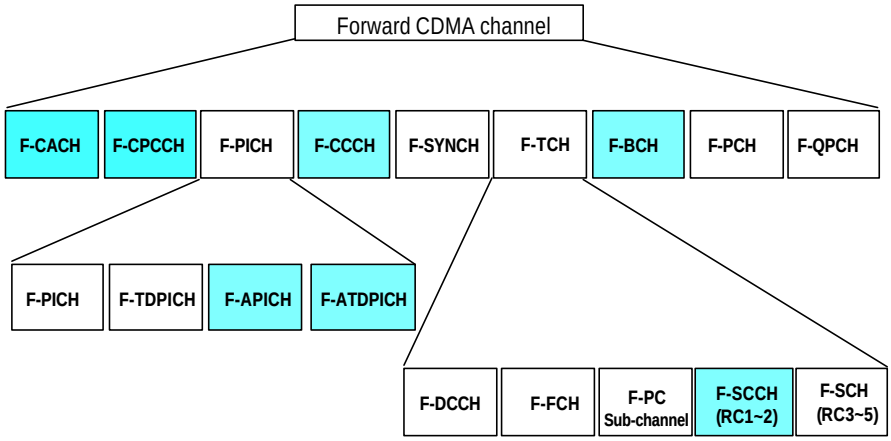

Figure 3-8 Forward physical channels

- Forward Common Assignment Channel (F-CACH)

F-CACH is used for transmitting the assignment information in quick response to the reversed channel, and provides the support for random access packet transmission in the reversed link. F-CACH controls Reverse Common Control Channel (R-CCCH) and Forward Common Power Control Channel (F-CPCCH) in Reservation Access Mode, and provides the quick acknowledgement in power-controlled access mode. In addition, it also provides congestion control function.

- Forward Common Power Control Channel (F-CPCCH)

F-CPCCH is used in the system to support multiple R-CCCHs and Reverse Enhanced Access Channels (R-EACHs) to perform power control.

- Forward Pilot Channel (F-PICH)

Signals are transmitted on F-PICH all the time. The BTS transmits a fixed signal in the pilot channel. This signal serves to provide phase reference for the coherent demodulation of MS receiver to ensure coherent detection, and facilities MS to acquire synchronization signals from the synchronization channel and sector identification information.

If the sector supports transmit diversity, it is necessary to configure Forward Transmit Diversity Pilot Channel (F-TDPICH).

If smart antenna or beam shaping formation technology is adopted, the BTS will provide one or more Forward Auxiliary Pilot Channels (F-APICHs) on the forward channel to improve the system capacity and coverage.

When diversity transmit method is used in CDMA channel with F-APICH, BTS will provide corresponding Forward Transmit Diversity Auxiliary Pilot Channel (F-ATDPICH).

- Forward Common Control Channel (F-CCCH)

F-CCCH are a series of coding & interleaving spreading and modulation spread spectrum signals, used by the MSs in the BTS coverage area. BTS transmits the system information and the designated MS information on this channel.

- Forward Sync. Channel (F-SYNCH)

The MSs in the coverage of BTS get initial synchronization information from F-SYNCH. The rate of synchronization channel is 1,200bit/s and the frame length is 26.667ms. The PN of pilot signal in I channel and Q channel of synchronization channel is the same as the PN in the pilot channel of the same BTS.

- Forward Traffic Channel (F-TCH)

F-TCH is used to send the user information and signaling information to an MS during the call. F-TCH can be sub-divided into:

Forward Dedicated Control Channel (F-DCCH), which bears traffic information and signaling information,

Forward Fundamental Channel (F-FCH), which bears traffic information,

Forward Power Control sub-channel (F-PC sub-channel): which are the signals sent only in forward fundamental channel or forward dedicated control channel,

Forward Supplemental Code Channel (F-SCCH): which bears traffic information, and is applicable to RC1 and RC2, and

Forward Supplemental Channel (F-SCH), which bears traffic information and is applicable to RC3, RC4 and RC5.

- Forward Broadcast Channel (F-BCH)

F-BCH is used by BTS to send the system information and broadcast messages (such as short messages). F-BCH operates in discontinuous mode.

- Forward Paging Channel (F-PCH)

F-PCH is used by BTS to send the system information and MS-specific information to MS.

Paging channel can be used to send the information with the fixed data rate of 9,600bit/s or 4,800bit/s. In a certain system (with the same system identification number), all paging channels send the information with the same data rate.

The frame length of paging channel is 20ms. Each frequency of the sector can support seven paging channels at most.

- Forward Quick Paging Channel (F-QPCH)

This is used to send paging indicator and the system configuration change indicator to MSs operating in slotted mode, instructing them to receive the paging messages. Thus the MS battery energy can be saved.

Quick paging channel can be divided into some 80ms timeslots. Each timeslot can be divided into paging indicator and configuration change indicator. The data rate that can be supported is 2,400bit/s or 4,800bit/s.

Note:

In Figure 3-8, the channel in shadow will be supported in the subsequent version.

For the location and function of the above channels in call procedures, please refer to Section "3.1 Call Procedure".

---

2) Reverse physical channel configuration

The configuration of reverse physical channel is shown in Figure 3-9.

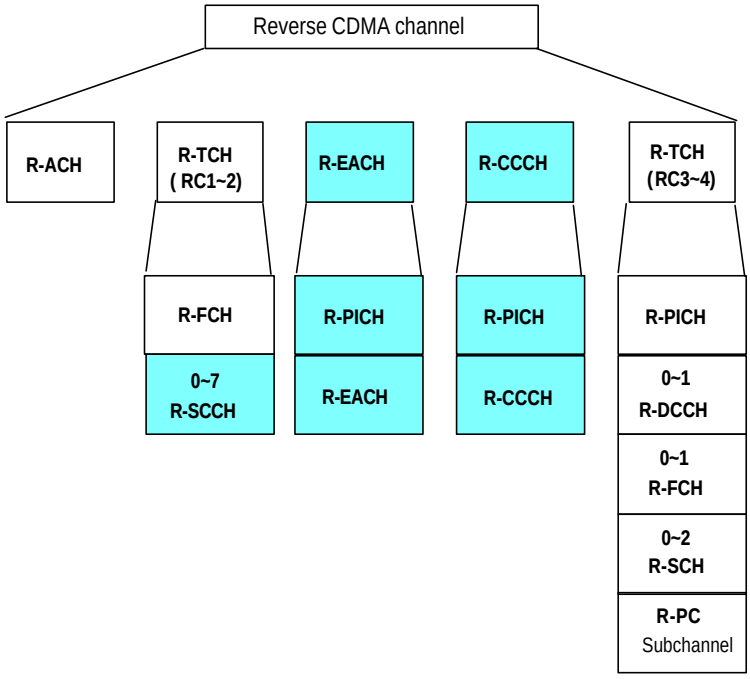

Figure 3-9 Configuration of reverse physical channel

- Reverse Access Channel (R-ACH)

R-ACH is used by MS to originate the communication with BTS, and respond to paging channel message. MS uses random access protocol to initiate access procedure. Regarding each of the supported paging channel, Maximum 32 access channels can be supported.

- Reverse Traffic Channel (R-TCH)

R-TCH is used by MS to send the user information and signaling information during the call.

In the configuration of RC1~RC2, R-TCH can be sub-divided into:

Reverse Fundamental Channel (R-FCH), and

Reverse Supplemental Code Channel (R-SCCH).

In the configuration of RC3~RC4, R-TCH can be sub-divided into:

Reverse Pilot Channel (R-PICH), which assists BTS to capture MS and improves receiving performance,

Reverse Dedicated Control Channel (R-DCCH) used to bear traffic information and signaling information,

Reverse Fundamental Channel (R-FCH) used to bear traffic information,

Reverse Supplemental Channel (R-SCH) used to bear the traffic information, and

Reverse Power Control sub-channel (R-PC subchannel), which is only used in RC3 and RC4 (The MS supports inner loop power control and outer loop power control on this channel).

- Reverse Enhanced Access Channel (R-EACH)

R-EACH is used by MS to originate the communication with BTS, or respond to the message that is specially sent to MS. R-EACH adopts random access protocol and supports two types of access modes: Basic Access Mode and Reservation Access Mode.

- Reverse Common Control Channel (R-CCCH)

R-CCCH is used to send the user and signaling information to BTS in case of not using reverse traffic channel. Two access modes are supported: Reservation Access Mode and Designated Access Mode.

Note:

In Figure 3-9, the channels in shadow will be supported in the subsequent version.

For the location and function of the above channels in call procedure, please refer to Section "3.1 Call Procedure".

3.4.4 Diversity Receiving

BTS3601C supports Diversity Receiving function, which is realized through two sets of independent receiving devices (including antenna, feeder, MFEM and MTRM).

The two sets of receiving devices demodulate the received signals at the same time, and then the baseband processing unit decodes the signals with diversity mergence algorithm to obtain diversity gain.

Diversity Receiving enhances BTS receivers' capability to resist fade, so that the BTS can achieve satisfactory receiving effect even in complicated radio transmission conditions.

3.4.5 Cell Breath

BTS3601C can control the transmit power so as to adjust the effective coverage of cells and balance the system load. This feature is especially important to CDMA system.

The control range of transmit power provided by BTS3601C for cell breath is 24dB. The transmit power is regulated at a step of 0.5dB.

3.5 Operation and Maintenance

BTS3601C provides convenient operation & maintenance functions. The functions can be classified as loading management, configuration management, equipment management, status management, tracing management and test management.

3.5.1 Loading Management

This function supports remote BTS software upgrading and remote configuration data loading.

Loading management performs the software loading and loading of configuration data.

Software loading involves downloading and activation of CPU software and FPGA logic, while configuration data loading involves both downloading and uploading of configuration data.

I. Software loading

When BTS is powered on and starts operation, its MBPB and MTRM will run the existing software in the Flash Memory. When the user needs to upgrade the software,

he can send the loading command through the remote maintenance console to activate the software loading process.

Note:

The remote maintenance console means the client of the BAM at the BSC side, and the nearby maintenance console means the client of the OMU at the BTS side. For details, please refer to the "1.1.1 Local Operation and Maintenance System" in modul 2 of this manual.

In the MBPB software loading process, the software stored in the BAM hard disk is first downloaded to the falsh memory of MBPB, and then activated by command.

In MTRB software loading process, the software is first downloaded to MBPB, and then downloaded to MTRB and activated.

Upon software upgrading, make sure to load the MTRB software first before loading the MBPB software. Upon software upgrading for the individual boards, make sure to load the FPGA software first, then the CPU software.

II. Configuration data loading

Data loading involves data downloading and uploading.

For BTS configuration data, if no "available" configuration data file exists in the Flash Memory of MBPB, BTS3601C will send a request to BAM for configuration data loading.

The configuration data can be downloaded in the same way as the software. The configuration data stored in the hard disk of BAM is first downloaded to MBPB ,and then the OMU of MBPB accomplishes the data configuration based on the configuration data for the BTS.

BTS3601C provides the data uploading function, which enables the configuration data of a BTS to be loaded to the specific directory of BAM.

3.5.2 Configuration Management

The configuration management function accomplishes the configuration for BTS equipment, radio resource, and so on. It also enables the user to query the configuration data.

This function can be realized through the remote maintenance console, or the nearby maintenance console.

I. Local cell configuration

This function is used to add or delete physical cell resources of the BTS. The unit of physical cell configuration is sector-carrier.

The following configuration items are provided for this function:

Local cell ID, local sector ID, carrier ID, MTRB ID, maximum cell radius, maximum user speed, maximum times of searching for reverse common channel, size of service channel search window, search window offset, and power control mode.

II. Abis signaling link configuration

This function is used to configure the parameters for the Abis signaling link between BSC and BTS. IPOA(Ip Over ATM) is adopted for Abis signaling link. Only one Abis signaling link can be configured. If a configuration message is received when an Abis signaling link already exists, it will be re-configured according to the new parameters.

The following configuration items are provided for this function:

Signaling IP address of BSC, signaling sub-net mask of BSC, VPI value of BSC signaling link, VCI value of BSC signaling link, signaling IP address of BTS, signaling sub-network mask of BTS, VPI value of BTS signaling link, and VCI value of BTS signaling link.

III. Abis traffic link configuration

This function is used to configure the Abis traffic link between BSC and BTS. AAL2 adaptation is adopted for Abis traffic link. BTS3601C supports the configuration of only one Abis traffic link. If a traffic link already exists upon the reception of a configuration message, the traffic link will be re-configured according to the new parameters.

The following configuration items are provided for this function:

VPI value of BSC traffic link, VCI value of BSC traffic link, VPI value of BTS traffic link, VCI value of BTS traffic link, and PVC index of this traffic link.

IV. System clock source configuration

This function is used to configure the priority level of BTS3601C clock sources. The three kinds of clock sources (in-borad clock source, internal clock source and external clock source) can be configured with different priority levels, so that BTS can choose the operation clock according to the priority level after startup.

The following configuration items are provided for this function:

Clock source of high priority, clock source of ordinary priority, and clock source with low priority.

In-board clock source can be GPS closk source or GLONASS clock source.

V. In-borad clock parameters configuration

More in-borad clock parameters should be configured after in-board clock source has been configured for BTS as its clock source.

The following configuration items are provided for this function:

Antenna delay compensation, time zone, and minute adjustment.

VI. GPS/GLONASS card configuration

This function is used to configure the GPS/GLONASS satellite receiver card (which is located on MBPM). If the satellite receiver card is GPS type, this configuration is not needed. If the satellite receiver card is GPS/GLONASS type, this command is used to configurate GPS/GLONASS receiver card to receive GPS signal only, or GLONASS signal only, or both of GPS and GLONASS signal.

The following configuration items are provided for this function:

Satellite card type, and satellite card operational mode.

VII. Channel processing parameters configuration

This function is used to configure the channel processing parameters for CSM5000 chip on MBPB.

The following configuration items are provided for this function:

Maximum number of reverse access channels, maximum number of common reverse access channels, minimum size of access channel preamble, enable search window adjustment, rate decision algorithm selection, maximum number of IS95 Fingers, and maximum number of CDMA2000 1X Fingers.

VIII. BTS operation start

This function is used to make the BTS functional units start up at the same time after configuring all/part of BTS functional units.

IX. Configuration data query

This function is used to query the BTS configuration data currently in use.

X. Configuration data deletion

This function is used to delete the BTS configuration data which is saved in Flash Memory.

XI. Configuration data saving

This function is used to save the BTS configuration data currently in use to the Flash Memory of MBPB so that BTS can obtain the data from the Flash Memory directly upon the startup next time.

XII. BTS automatic typical configuration

This function is used to configure a BTS3601C sector-carrier automatically.

The effect of this function is equal to the concurrent execution of several functions based on some default parameters. Those functions include: adding BTS cell configuration, BTS signaling link configuration, BTS traffic link configuration, BTS clock source configuration, BTS GPS clock parameter configuration, GPS/GLONASS configuration, channel processing parameter configuration, and BTS operation start.

The following configuration items are provided for this function:

Local cell ID, local sector ID, carrier ID, BSC signaling IP, signaling sub-net mask of BSC, VPI of BSC signaling link, VCI of BSC signaling link, BTS signaling IP, signaling sub-net mask of BTS, VPI of BTS signaling link, VCI of BTS signaling link, VPI of BSC traffic link, VCI of BSC traffic link, VPI of BTS traffic link, VCI of BTS traffic link, and PVC value of this traffic link.

XIII. E1/T1 Fractional ATM transmission management

BTS3601C capacity is small; therefore, it requires relatively small transmission bandwidth. E1/T1 fractional ATM transmission management function can make use of the time slot of the existent transmission lines, saving much cost for transmission.

The type of E1/T1 should be consistent with that setting of the board DIP switch upon board startup.

The timeslot set at the two sides of E1/T1 (at BTS and BSC) should be the same. Otherwise Abis link and OML can not be set up, and BTS-BSC, BTS-OMC communication can not be available.

The following configuration items are provided for this function:

E1/T1 type and the timeslot No. used.

3.5.3 Equipment Management

I. Version query

This function is used to query the version of MBPB and MTRB of BTS3601C. The version information of MBPB includes: software version No., logical version No., BOOTROM version No., PCB version No., CPU version No., and hardware & software version No. of CSM5000 chip. MTRB version information includes: software version No, logical version No., BOOTROM version No. and PCB version No.

II. Electrical label query

This function is used to query the electrical label of BTS boards (MBPB and MTRB).

MTRB electrical label includes the labels of MTRB, MMCB and MAPM.

III. Log management

This function is used to query BTS log information. There are user operation log and system running log. The former records the operation commands executed by the user at BTS side, and the later records the running information of boards.

IV. Alarm management

This function includes alarm detection, alarm report, query of current alarms, query of history alarms and deletion of history alarms.

Alarm detection and report functions are used to detect faults on the links, devices or resources during the BTS3601C operation and report the corresponding alarms to OMC. BTS3601C can store more than 3,000 current alarms and history alarms.

Alarm query and deletion functions support the conditional query of the current alarms and history alarms, as well as the deletion of history alarms.

The module alarms are listed below.

- Common alarm

Including the alarms of board parameters configuration error, board temperature abnormal, board communication link fault, optical interface no signal, CPU occupancy too high, etc.

- MBPB alarm

Including the alarms of OML disconnection, Abis signaling link fault, satellite antenna system fault, system clock abnormal, master clock out of sync., UNI link alarm, E1/T1 link local alarm, E1/T1 link remote alarm, and MASU fault.

- MTRB alarm

Including the alarms of receiver over-excited, transmit path clock out of sync., hardware phase-locked loop out of sync., software phase-locked loop out of sync., I_0 value abnormal, and digital down converter fault. Besides, the alarms related to fans, power amplifier and MLNA are also reported through MTRB.

V. Equipment reset

BMPB and MTRB in BTS3601C can be reset.

VI. Cell resource block/unblock

BTS3601C supports the block/unblock operation over cell resources, which has the following three priority levels:

- Low priority level: To be blocked once the resource is in idle status.
- Medium priority level: To be blocked after the specified period of delay.
- High priority level: To be blocked immediately.

VII. User management

This function is used to perform authentication and user information modification for users logged in to the BTS through Telnet.

- User authentication

User authentication is used to realize login control and authority control over the users logged in to the BTS through Telnet. BTS3601C supports users of the system level and of the guest level with corresponding operation authorities.

The user name for system level user is "system", and the initial password is "system".

The user name for guest level users is "guest", and the initial password is "guest".

- User information modification

BTS3601C supports the modification of the password by the user through Telnet. System level users can modify the passwords for both system level users and guest level users, while the guest level users can modify only the passwords of their own. To modify the password, the original password should be provided.

VIII. Fault handling

BTS will take corresponding measures upon BTS resource/board faults in order to solve or avoid the problem. The faults for BTS3601C to handle include Boot Protocol (BOOTP) failure and Abis signaling link disconnection.

- BOOTP failure

After the startup of BTS3610C, BOOTP (cycle: 10s) will be conducted repeatedly until it succeeds. After starting BOOTP for 5 minutes, if BTS3601C has not finished

configuration and started, it will be reset; if BTS3601C is in test mode or finished configuration, it will not be reset.

- Abis signaling link disconnection

BTS sends a handshaking packet to BSC once a second. If no response is received from BSC within 20 seconds, the system regards that Abis signaling link has been disconnected. In this case, BTS3601C will shut down all the transceiver. If Abis signaling link has disconnected continuous over 5 minutes, BTS3601C will reset itself.

IX. Power management

This function can be used to shut down the power of the whole BTS, either permanently or temporary (The delay period can be set. For example, if it is set to 2 minutes, BTS will be powered on again 2 minutes later).

X. Environment alarm threshold management

This function includes the environment alarm threshold setting and query of MBPB and of MTRB.

XI. MASU management

This function can be used to support MBPB-MASU communication and query MASU board status.

3.5.4 Status Management

This function supports the active report of status, periodic report of status, board status query, board special status query and interface status query.

When BTS3601C detects the change in physical resource status, it will send to OMC the corresponding report. Such cases include: MTRB status change report received, MBPB-MTRB communication link disconnected, MBPB alarm (of the major level or above) generated or cleared as detected by MBPB itself or reported by MTRB.

I. Board status

- MBPB statuses include:

Status type	Value range
Operation status	Normal
	Abnormal
	Alarms generated on board
	Board not mounted
CSM chip status	Ok (normal)
	Not Mounted
	Error

- MTRB statuses include:

Status type	Value range
Operation status	Enable (enabled)
	Disable (disabled)
	Degrade
	Not Install (not installed)
	Board Not Config (board not configured)
Administration status	Block (blocked)
	Unblock (unblocked)

II. Board special status

- MBPB special statuses include:

Special status type	Status name	Value range and description
E1/T1 State	Work mode	E1 Mode T1 Mode
	E1/T1 line select	Optical Fiber (connected to BTS through MASU optical interface via E1/T1) Direct E1/T1 Line (connected to BTS via E1/T1 cable)
	E1/T1 impedance	120 ohm 75 ohm
	Loop mode	No Loop (normal operation mode) Local Loop Remote Loop Payload Loop Single Channel Loop
	Clk mode	Master (master mode) Slave (slave mode)
	E1/T1 link work state	LOS alarm (E1/T1 signal lost alarm)
		AIS alarm (E1/T1 alarm indication signal)
		LFA (E1/T1 frame lost alarm)
		LMFA (E1/T1 multi-frame lost alarm)
		RRA (E1/T1 remote alarm)
		Ok
UNI State	Config state	Not Config (not configured) Config (configured)
	Work mode	ATM_UNI (ATM UNI mode)
	Tx port status	Active (activated) Inactive (not activated)
UNI State	Rx port status	Active (activated) Inactive (not activated)
	Port loop mode	No Loop Serial Loop Upstream Loop Downstream Loop
	UNI link work state	LCD alarm (cell delimitation alarm)
		Ok (normal)
Bootp State	Bootp State	SUCCESS (success) FAILURE (failure)
	BTS IP Address	IP address of BTS (available only when BOOTP status is "success")
	OMC IP Address	IP address of OMC (available only when BOOTP status is "success")
Clock state	Clk ref source	INBRDREF_CLK (board internal clock source) EXTERNAL_CLK (external clock source) INTERNAL_CLK (internal clock source)

Special status type	Status name	Value range and description
Clock state	Satellite card model	K_161T (GPS/GLONASS card) UTONCORE (GPS card)
	Satellite card work mode	GPS only GLONASS only GPS and GLONASS
	GPS Satellites traced	The number of traced GPS satellites
	GLONASS Satellites traced	The number of traced GLONASS satellites
	Latitude	Latitude
	Longitude	Longitude
	Altitude	Altitude
Clock state	PLL status	Free (free run) Search (phase adjust) Search (frequency adjust) Track (tracking) Lock (locked) keep (holdover)
	GMT offset	The time offset based on Greenwich Mean Time
Local cell state	Local cell id	Local cell ID
	Local sector id	Local sector ID
	Carrier id	Carrier ID
	Local cell state	Local Cell Unavailable
		Local Cell Available
		CCH-Setup (common channel already setup)
		OH-Msg Updated (overhead message already updated)
Heater Board State	Heater Board State	Not Installed Heating Not Heating

- MTRB special statuses include:

TRX Band Class	MTRB band
TRX ARFCN	MTRB frequency point
TRX GAIN	MTRB fade gain (unit: dB)
TRX BLOCK FLAG	MTRB block flag (1: blocked; 0: not blocked)
HOT BOARD STATUS	MTRB heating plate status

III. Interface status

BTS3601C interfaces include: Abis (to BSC), OML (to OMC), FTP (FTP interface), Telnet 1 – 3 (to Telnet), TRXSIG 0 – 5 (to MTRB signaling link) and TRXOAM 0 – 5 (to MTRB O&M link).

The statuses of each interface include "connected" and "disconnected".

3.5.5 Tracing Management

I. Interface tracing

This function can be used to trace the messages on the specified interface for the purpose of BTS debugging and fault locating. The interfaces can be traced include:

OML interface, Abis interface, MBPB-MTRB signaling interface and O&M interface.

II. Resource tracing

BTS3601C resource tracing management includes:

The management of MBPB CPU occupancy, board temperature, channel resource and I_0 (power spectrum density) value.

The management of MTRB CPU occupancy, board temperature, optical fiber delay and transmit power.

3.5.6 Test Management

Test management is an important function of BTS maintenance. When a BTS fault occurs, test is often needed to locate the problem. In the process of BTS operation, it is also necessary to make regular tests to some items so as to monitor the performance change of BTS.

BTS3601C provides powerful test functions, including:

I. Board loopback test

This test refers to the loopback test on MBPB-BTRB link, including the O&M link and signaling link.

The control console determines the data and length of loopback. Loopback data are sent from the control console, forwarded by OMU to the high layer of board software, and looped back. Then OMU will make judgment whether the data are correct and return the information to the control console.

II. E1/T1 loopback test

This function is used for the loopback test of E1/T1 link on Abis interface, including three types: FARLP, RMT and PLD.

For FARLP test, the E1/T1 receiving end should be connected with the E1/T1 transmitting end manually at the remote side (BSC side). BTS3601C will send and receive the test data.

When RMT and PLD are selected, the BTS will automatically loopback the E1/T1 cable at BTS side to facilitate the E1/T1 test on BSC. But, in RMT test, BTS will return the data received from E1/T1 cable without processing it; While in PLD test, BTS will process the data received from E1/T1 cable, discard the error data, and return only the correct data.

III. RSSI test

Received Signal Strength Indicator (RSSI) test can help to judge whether BTS receiving paths are operating normally.

3.6 Lightning Protection

3.6.1 Lightning Protection for Power Supply

As an all-whether outdoor BTS, BTS3601C features strong protection capability against extreme temperature, rain, dust and lightning, and is adaptive to the power supply of unstable voltage.

BTS3601C MAPM is designed to be lightning proof. However, when operating together with the lightning protection box for power supply, the lightning proof effect will be even more satisfactory.

BTS3601C must be installed together with the lightning protection box for power supply to protect it from lightning strike when: (1) There are only AC interfaces (outdoor environment); or (2) The power distribution system does not have all-round protection mechanism (indoor environment).

BTS3601C uses the single phase lightning protection box SPD211SZ of AC power supply. It is connected between the mains cable and the BTS input cable, and can resist the surge current over 40kA. The phase voltage of local mains shall be 220VAC, and working frequency 50Hz. The connection is shown in Figure 3-10.

The AC lightning protection box should be selected according to the actual situation from the three types: 20kA, 40kA and 100kA.

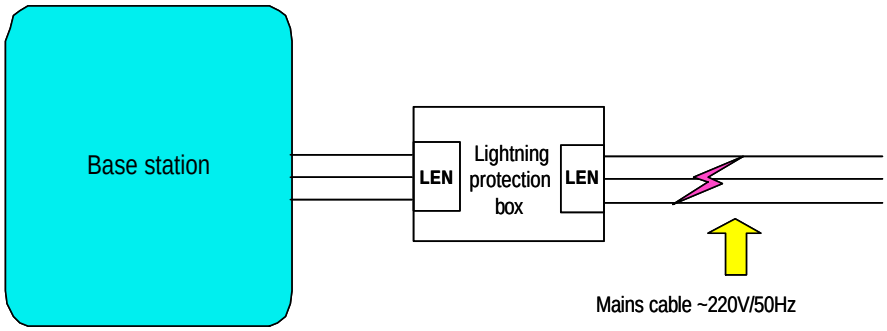

Figure 3-10 BTS AC power supply

The AC lightning protection box is a cube independent of the BTS equipment. This feature makes it applicable to other BTS. The holes for cables are covered by water-proof plastic, making installation convenient.

3.6.2 Lightning Protection for Trunk Line

Three kinds of trunk lines are supported in BTS3601C: 75Ù coaxial cable (E1/T1), 120Ù twisted pair (E1/T1) and optical fiber. Lightning protection is out of question if optical fiber is used as the BTS is connected with fiber tail. For E1/T1 trunk line, the lightning protection unit attached to MBPB provides the lightning protection.

Besides, this lightning protection unit provides the lightning protection for external synchronization communication serial ports, external synchronization 1PPS port and satellite receiving unit. For details, please refer to the introduction to MBPB structure and principles in Section 2.2 of this module.

3.6.3 Lightning Protection for Antenna and Feeder System

The RF equipment of the BTS shall be placed within the protection range of the lightning rod, which is the precondition to ensure the normal performance of BTS lightning protection system.

I. Lightning protection for RF antenna and feeder

Antenna & feeder lightning protection is to protect against secondary lightning attack, i.e. the inductive lightning. Inductive lightning means that the feeder receives inductive current at the moment of lightning attack, which may cause damage to the equipment.

Inductive lightning can be prevented effectively in three ways:

- The feeder is grounded at least at three points. In actual implementation, the number of grounding points depends on the length of the feeder.
- The RF antenna & feeder part and MFEM are grounded through an internal path. The lightning current induced by the antenna and feeder can be directly discharged to the ground through the grounded point. Besides, the MFEM itself features strong protection capability against lightning current, and can satisfy the normal protection requirements without adding lightning protector.
- Lightning rod protection. The lightning rod must be installed within the effective range for the BTS when BTS is installed on the tower, in the open, or at a high place. The protective range of the lightning arrester is shown in Figure 3-11.

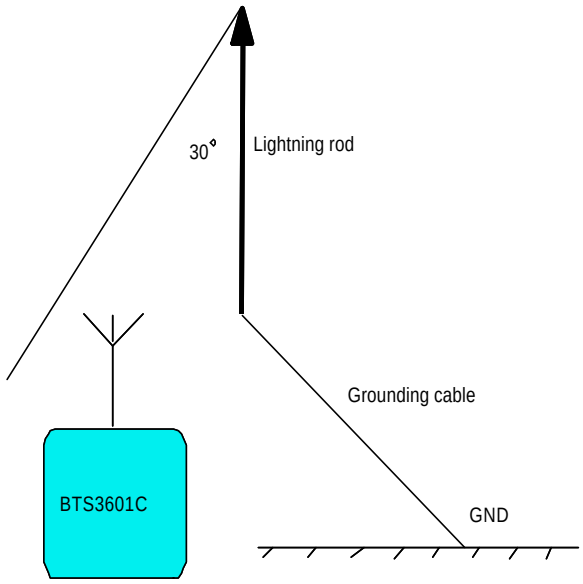

Figure 3-11 Lightning protection of RF antenna & feeder

II. Lighting protection for dual-satellite synchronization antenna & feeder

GPS/GLONASS dual-satellite synchronization antenna & feeder should be under the protection of the lightning arrester as shown in Figure 3-11.

Other lightning protection measures include:

- Grounding of feeder at three points: In actual implementation, the number of grounding points depends on the length of the feeder.
- External lightning protector: In normal condition, a lightning arrester is connected at antenna side and BTS equipment side respectively, so as to avoid the possible damage to the BTS equipment and antenna caused by the lightning current induced by feeder core.
- Build-in lightning protection unit. The lightning protection unit on MBPB can restrict the residual voltage from the lightning protector, so as to protect the satellite receiver card.

3.7 Configuration and Networking

3.7.1 BTS Configuration

I. Cabinet configuration

The BTS3601C is of one-carrier configuration. Its main parts include MAPM, MBPM, MTRM, MFEM and MPAM.

Configuration of the BTS3601C cabinet is shown in Figure 3-12.

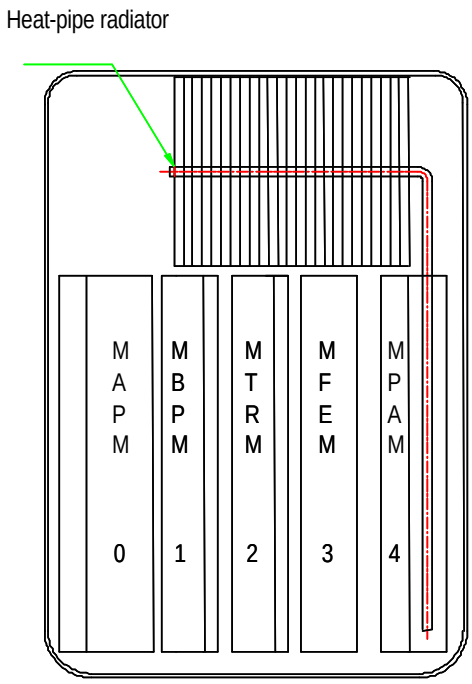

Figure 3-12 BTS3601C configuration (AC power input)

As shown in the above configuration, slots 0, 1, 2, 3 and 4 are configured with MAPM, MBPM, MTRM, MFEM and MPAM respectively.

If only DC is available, an inverter should be installed to invert DC into the 220V AC.

II. Site configuration

- Basic configuration

The basic configuration is one carrier for omni cell.

- Other configuration

S (0.5/0.5) configuration: A 1-to-2 passive power splitter should be added on the basis of the basic configuration. Besides, the omni antenna should be replaced with two directional antennae to realize the directed coverage of the two sectors.

Cascading configuration: BTS3601C can realize the S(1/1) configuration by cascading one ODU3601C, or realize S(1/1/1) by cascading two ODU3601Cs.

3.7.2 BTS Networking

BTS3601C supports multiple transmission networking modes, including star networking, chain networking and ring networking.

The networking modes supported by the BTS3601C are relevant to the external interfaces it provides. The BTS3601C provides two external STM-1 interfaces and one external E1 interface.

When BTS3601C is connected to the transmission system via the STM-1 interface, it can cascade the subordinate BTS via the other STM-1 interfaces or E1 interface. When it is connected to the transmission system via the E1 interface, its STM-1 interface cannot serve to cascade the subordinate BTS.

I. Star networking

Start networking is as shown in Figure 3-13. In this mode, each BTS is directly connected with BSC with an E1 trunk line.

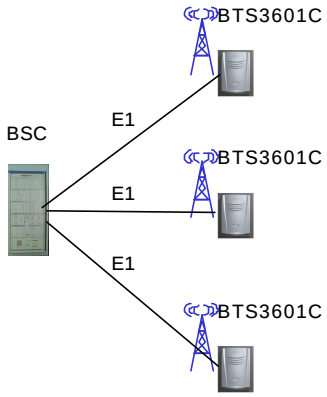

Figure 3-13 BTS star networking

Star networking varies in transmission media and media networking. The following are two star networking modes based on the existing SDH transmission system.

- The BTS3601C is connected to the SDH transmission ring via the STM-1 interface and through transmission nodes, as shown in Figure 3-14.
- The BTS3601C is connected to the SDH transmission ring via the E1 interface and through transmission nodes, as shown in Figure 3-15.

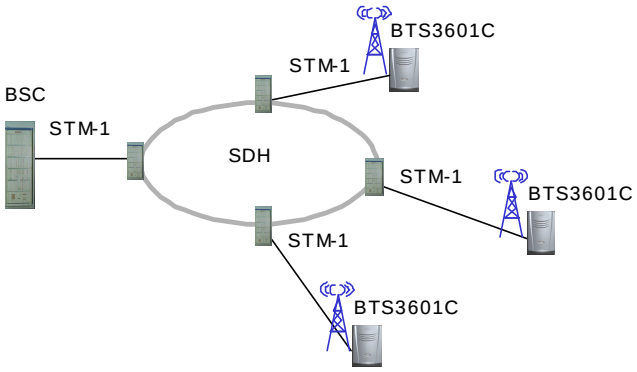

Figure 3-14 Star networking (connected to SDH transmission ring via STM-1 interface)

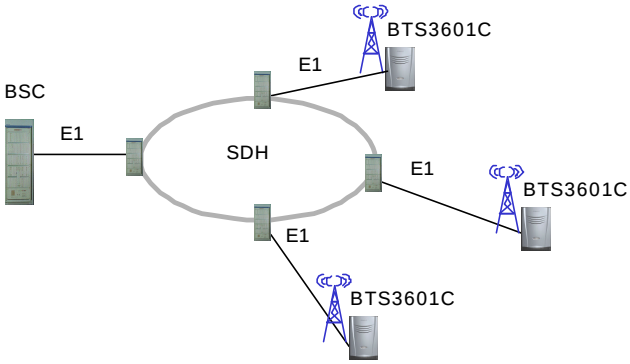

Figure 3-15 Star networking (connected to SDH transmission ring via E1 interface)

II. Optical fiber chain networking

Optical fiber chain networking requires the support of SDH transmission system. The BTS3601C is connected to the transmission system via the STM-1 interface, as shown in Figure 3-16.

Figure 3-16 Chain networking

Since each BTS3601C obtains E1 from the transmission system via its own SDH155 optical interface board, and is logically connected to the BSC via its E1 link, optical fiber chain networking is actually a kind of star networking.

III. Optical fiber ring networking

The optical fiber ring networking differs from the optical fiber chain networking in that all the BTSs are concatenated to an SDH155 ring in sequence, as shown in Figure 3-17.

Like the chain networking, the optical fiber ring networking can also be regarded as star networking.

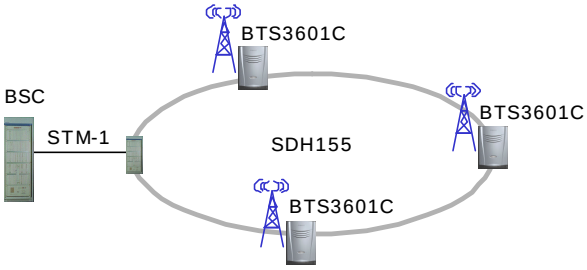

Figure 3-17 Ring networking

IV. Cascading with ODU3601C

ODU3601C is usually cascaded with the master BTS in network implementation. Different optical interface module allows different distances (10km or 70km) between two cascaded BTSs. One BTS3601C can be cascaded with at most two ODU3601Cs, and the cascading distance reaches 60km.

The networking is as shown inFigure 3-18.

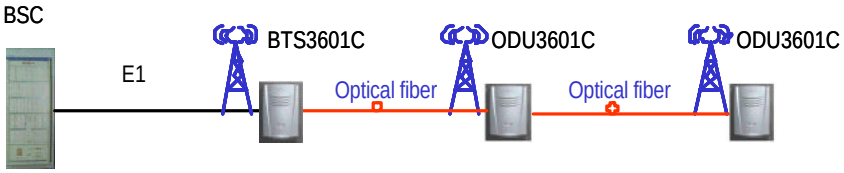

Figure 3-18 Cascading with ODU3601C

V. Co-E1 networking with external DXC

BTS3601C supports co-E1 networking via the external Digital Cross-Connect Equipment (DXC). Each BTS3601C is allocated with specific timeslots to save transmission resources.

The co-E1 networking with external DXC is shown in Figure 3-19.

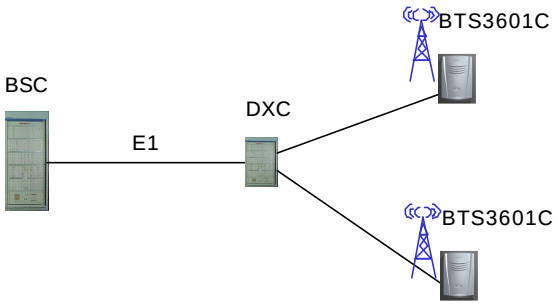

Figure 3-19 Co-E1 networking of the external DXC

VI. Co-transmission networking with GSM mini BTS

The BTS3601C supports co-transmission networking with the appropriate Huawei GSM mini BTS (e.g. BTS3001C). When the BTS3601C and GSM mini BTS are constructed at the same site, transmission resources can be shared and network construction can be expedited.

Co-transmission networking generally requires BTSs of the first level be connected to the SDH transmission system via the STM-1 interface. BTSs of the second and first levels are directly connected via the E1 trunk cables.

Co-transmission networking with GSM mini BTS is shown in Figure 3-20.

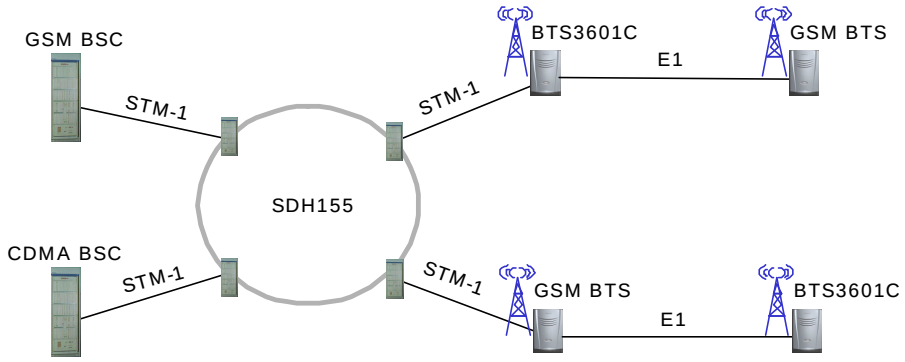

Figure 3-20 Co-transmission networking

Appendix A Performance of Receiver and Transmitter

The performances of BTS receivers and transmitters comply with or surpass all the specifications defined in the IS-97-D Recommended Minimum Performance Standards for cdma2000 Spread Spectrum Base Stations.

A.1 Performance of Receiver

A.1.1 Frequency Coverage

450MHz band: 450 - 460MHz

800MHz band: 824 - 849MHz

A.1.2 Access Probe Acquisition

The access probe failure rate under the reliability of 90% is below the maximum values listed in Table A-1:

Table A-1 Access probe failure rate

Eb/N0 Per RF input point (dB)	Maximum failure rate
5.5	50%
6.5	10%

A.1.3 R-TCH Demodulation Performance

I. Performance of R-TCH in Additive White Gaussian Noise (AWGN)

The demodulation performance of the Reverse Traffic Channel in AWGN (no fading or multipath) environment is determined by the frame error rate (FER) at specified Eb/N0 value. FER of 4 possible data rates should be calculated respectively. With 95% confidence, the FER for each data rate does not exceed the two given FERs in Table A-2 to Table A-9, which adopt the linear interpolation in the form of Log_{10}(FER). Eb/N0 measurement value is decided by whichever is bigger of the Eb/N0 values in two RF input ports.

Table A-2 Maximum FER of F-FCH or R-DCCH receiver in demodulation performance test under RC1

Data rate (bit/s)	FER limits (%)	
	Lower limit Eb/N0	Upper limit Eb/N0
9,600	3.0 @ 4.1dB	0.2 @ 4.7dB
4,800	8.0 @ 4.1dB	1.0 @ 4.7dB
2,400	23.0 @ 4.1dB	5.0 @ 4.7dB
1,200	22.0 @ 4.1dB	6.0 @ 4.7dB

Table A-3 Maximum FER of F-FCH or R-DCCH receiver in demodulation performance test under RC2

Data rate (bit/s)	FER limits (%)	
	Lower limit Eb/N0	Upper limit Eb/N0
14,400	5.0 @ 3.2dB	0.2 @ 3.8dB
7,200	6.3 @ 3.2dB	0.7 @ 3.2dB
3,600	5.8 @ 3.2dB	1.0 @ 3.2dB
1,800	3.5 @ 3.2dB	1.0 @ 3.2dB

Table A-4 Maximum FER of F-FCH or R-DCCH receiver in demodulation performance test under RC3

Data rate (bit/s)	FER limit (%)	
	Lower limit Eb/N0	Upper limit Eb/N0
9,600	2.3% @ 2.4 dB	0.3% @ 3.0 dB
4,800	2.3% @ 3.8 dB	0.4% @ 4.4 dB
2,700	2.5% @ 5.0 dB	0.5% @ 5.6 dB
1,500	1.7% @ 7.0 dB	0.4% @ 7.6 dB

Table A-5 Maximum FER of R-SCH receiver in demodulation performance test under RC3

Data rate (bit/s)	FER limit (%)	
	Lower limit Eb/N0	Upper limit Eb/N0
19,200	9% @ 1.7 dB	1.7% @ 2.3 dB
38,400	13% @ 1.4 dB	2.1% @ 2.0 dB
76,800	14% @ 1.3 dB	2.4% @ 1.9 dB
153,600	14% @ 1.3 dB	2.4% @ 1.9 dB
307,200	14% @ 1.8 dB	2.0% @ 2.4 dB

Table A-6 Maximum FER of R-SCH (Turbo Code) receiver in demodulation performance test under RC3

Data rate (bit/s)	FER limit (%)	
	Lower limit Eb/N0	Upper limit Eb/N0
19,200	20% @ 0.6 dB	0.9% @ 1.2 dB
38,400	24% @ -0.1 dB	0.3% @ 0.5 dB
76,800	30% @ -0.5 dB	0.2% @ 0.1 dB
153,600	60% @ -0.9 dB	0.1% @ -0.3 dB
307,200	90% @ -0.3 dB	0.1% @ 0.3 dB

Table A-7 Maximum FER of F-FCH or R-DCCH receiver in demodulation performance test under RC4

Data rate (bit/s)	FER limit (%)	
	Lower limit Eb/N0	Upper limit Eb/N0
14,400	2.4% @ 0.8 dB	0.3% @ 1.4 dB
7,200	2.4% @ 3.1 dB	0.4% @ 3.7 dB
3,600	1.7% @ 4.6 dB	0.3% @ 5.2 dB
1,800	1.6% @ 6.6 dB	0.5% @ 7.2 dB

Table A-8 Maximum FER of R-SCH receiver of demodulation performance test under RC4

Data rate (bit/s)	FER limit (%)	
	Lower limit Eb/N0	Upper limit Eb/N0
28,800	10% @ 1.7 dB	1.9% @ 2.3 dB
57,600	12% @ 1.6 dB	1.7% @ 2.2 dB
115,200	14% @ 1.6 dB	2.0% @ 2.2 dB
230,400	12% @ 1.7 dB	1.7% @ 2.3 dB

Table A-9 Maximum FER of R-SCH (Turbo Code) receiver of demodulation performance test under RC4

Data rate (bit/s)	FER limit (%)	
	Lower limit Eb/N0	Upper limit Eb/N0
28,800	27% @ 0.7 dB	0.5% @ 1.3 dB
57,600	28% @ 0.2 dB	0.2% @ 0.8 dB
115,200	60% @ -0.2 dB	0.1% @ 0.4 dB
230,400	33% @ -0.5 dB	0.1% @ 0.1 dB

II. R-TCH performance in multipath fading without closed-loop power control

The performance of the demodulation of the Reverse Traffic Channel in a multipath fading environment is determined by the frame error rate (FER) at specified Eb/N0 value. FER of 4 possible data rates should be calculated respectively. With 95% confidence, the FER for each data rate shall not exceed that given by linear interpolation on a log10 (FER) scale between the two values given in Table A-13 and Table A-14. And the test value of Eb/N0 assumes the average value of Eb/N0 in two RF input ports. During the test, the reverse service channel Eb/N0 of each RF input port adopted is within the limits specified in Table A-12.

The configurations of standard channel simulator are given in Table A-10; and the channel models of the R-TCH receiving performance test in multipath environment are listed in Table A-11.

Table A-10 Standard channel simulator configuration

Standard channel Simulator configuration	Speed	Number of Paths	Path 2 power (corresponds to path 1)	Path 3 power (corresponds to path 1)	Deferring path 1 input	Deferring path 2 input	Deferring path 3 input
B	8km/h	2	0dB	N/A	0μs	2.0μs	N/A
C	25km/h	1	N/A	N/A	0μs	N/A	N/A
D	100km/h	3	0dB	-3dB	0μs	2.0μs	14.5μs

Table A-11 Channel models for the R-TCH receiving performance test

Case	Channel Simulator configurations
B	2 (8 km/h, 2 paths)
C	3 (30 km/h, 1 path)
D	4 (100 km/h, 3 paths)
D2	4 (100 km/h, 3 paths)

Table A-12 Eb/N0 limits of R-TCH without closed-loop power control

Rate configuration	Condition	Eb/N0 Limits (dB)	
		Lower limit	Upper limit
RC1	B	11.1	11.7
	C	11.2	11.8
	D	8.8	9.4
	D2	9.2	9.8
RC2	B	10.7	11.3
	D	8.5	9.1
	D2	8.9	9.5

Table A-13 Maximum FER of demodulation performance test of R-FCH or R-DCCH receiver under RC1

Case	Data rate (bit/s)	FER limits (%)	
		Lower limit Eb/N0	Upper limit Eb/N0
B	9,600	1.3	0.8
	4,800	1.4	0.9
	2,400	1.6	1.2
	1,200	1.3	0.9
C	9,600	1.2	0.7
	4,800	1.4	0.9
	2,400	2.5	1.7
	1,200	2.0	1.4
D	9,600	1.6	0.6
	4,800	2.6	1.2
	2,400	6.4	3.4
	1,200	5.6	3.5
D2	9,600	0.9	0.3
	4,800	1.6	0.7
	2,400	4.2	2.3
	1,200	4.1	2.6

Table A-14 Maximum FER of demodulation performance test of R-FCH or R-DCCH receiver under RC2

Case	Data rate (bit/s)	FER limits (%)	
		Lower limit Eb/N0	Upper limit Eb/N0
B	14,400	1.3	0.8
	7,200	1.0	0.5
	3,600	0.7	0.4
	1,800	0.6	0.5
D	14,400	1.7	0.6
	7,200	1.6	0.6
	3,600	1.5	0.9
	1,800	2.2	1.2
D2	14,400	0.9	0.3
	7,200	0.9	0.4
	3,600	1.1	0.6
	1,800	1.5	0.9

III. Performance in multipath fading with closed-loop power control

The performance of the demodulation of the Reverse Traffic Channel in a multipath fading environment is determined by the frame error rate (FER) at specified Eb/N0 value. FER of 4 possible data rates needs to be calculated respectively. With 95% confidence, the FER for each data rate shall not exceed that given by linear interpolation on a $\log_{10}$ scale between the two values given in Table A-16 and **错误！未找到引用源。**. And the test value of Eb/N0 assumes the average value of Eb/N0 tested on the two RF input ports.

Table A-15 Channel models for the R-TCH receiving performance test

Condition	Number of Channel Simulator configurations
A	1 (3 km/h, 1 path)
B	2 (8 km/h, 2 paths)
C	3 (30 km/h, 1 path)
D	4 (100 km/h, 3 path)

Table A-16 Maximum FER of demodulation performance test of R-FCH receiver under RC1

Condition	Data rate (bit/s)	FER limits (%)	
		Lower limit Eb/N0	Upper limit Eb/N0
B	9,600	2.8% @ 5.9 dB	0.3 @ 6.5 dB
	4,800	7.6 @ 5.9 dB	2.2 @ 6.5 dB
	2,400	23.0 @ 5.9 dB	12.0 @ 6.5 dB
	1,200	22.0 @ 5.9 dB	14.0 @ 6.5 dB
C	9,600	1.5 @ 7.1 dB	0.7 @ 7.7 dB
	4,800	8.0 @ 7.1 dB	4.8 @ 7.7 dB
	2,400	18.0 @ 7.1 dB	13.0 @ 7.7 dB
	1,200	16.0 @ 7.1 dB	12.0 @ 7.7 dB

Table A-17 Maximum FER of demodulation performance test of R-FCH receiver under RC2

Case	Data rate (bit/s)	FER limits (%)	
		Lower limit Eb/N0	Upper limit Eb/N0
B	14,400	2.8 @ 5.2 dB	0.4 @ 5.8 dB
	7,200	4.7 @ 5.2 dB	1.3 @ 5.8 dB
	3,600	8.7 @ 5.2 dB	4.6 @ 5.8 dB
	1,800	15.0 @ 5.2 dB	9.8 @ 5.8 dB
C	14,400	1.3 @ 7.7 dB	0.7 @ 8.3 dB
	7,200	3.2 @ 7.7 dB	1.8 @ 8.3 dB
	3,600	4.7 @ 7.7 dB	3.5 @ 8.3 dB
	1,800	5.2 @ 7.7 dB	3.9 @ 8.3 dB

Table A-18 Maximum FER of demodulation performance test of R-FCH or R-DCCH receiver under RC3

Case	Data rate (bit/s)	FER limits (%)	
		Lower limit Eb/N0	Upper limit Eb/N0
A	9,600 (20 ms)	2.4% @ 3.4 dB	0.5% @ 4.0 dB
	4,800	2.0% @ 4.4 dB	0.5% @ 5.0 dB
	2,700	1.8% @ 5.6 dB	0.5% @ 6.2 dB
	1,500	1.8% @ 7.2 dB	0.6% @ 7.8 dB
B	9,600 (20 ms)	2.0% @ 3.9 dB	0.5% @ 4.5 dB
	4,800	2.0% @ 4.9 dB	0.5% @ 5.5 dB
	2,700	1.8% @ 6.1 dB	0.5% @ 6.7 dB
	1,500	1.7% @ 7.8 dB	0.5% @ 8.4 dB
C	9,600 (20 ms)	1.5% @ 5.2 dB	0.6% @ 5.8 dB
	4,800	1.5% @ 6.1 dB	0.6% @ 6.7 dB
	2,700	1.4% @ 7.2 dB	0.6% @ 7.8 dB
	1,500	1.4% @ 8.8 dB	0.6% @ 9.4 dB
D	9,600 (20 ms)	2.0% @ 4.7 dB	0.5% @ 5.3 dB
	4,800	2.0% @ 5.7 dB	0.5% @ 6.3 dB
	2,700	1.8% @ 6.9 dB	0.5% @ 7.5 dB
	1,500	1.7% @ 8.5 dB	0.5% @ 9.1 dB

Table A-19 Maximum FER of demodulation performance test of R-SCH (Turbo Code) receiver under RC3

Case	Data rate (bit/s)	FER limits (%)	
		Lower limit Eb/N0	Upper limit Eb/N0
B	307,200	10% @ 2.6 dB	2.0% @ 3.2 dB
	153,600	10% @ 2.6 dB	2.0% @ 3.2 dB
	76,800	10% @ 2.1 dB	2.4% @ 2.7 dB
	38,400	9.0% @ 2.4 dB	2.4% @ 3.0 dB
	19,200	9.0% @ 2.8 dB	2.5% @ 3.4 dB

Table A-20 Maximum FER of demodulation performance test of R-SCH (Turbo Code) receiver under RC3

Case	Data rate (bit/s)	FER limits (%)	
		Lower limit Eb/N0	Upper limit Eb/N0
B	307,200	15% @ 0.8 dB	1.8% @ 1.4 dB
	153,600	12% @ 0.2 dB	2.0% @ 0.8 dB
	76,800	10% @ 0.7 dB	2.0% @ 1.3 dB
	38,400	10% @ 1.3 dB	2.0% @ 1.9 dB
	19,200	10% @ 2.1 dB	2.5% @ 2.7 dB

Table A-21 Maximum FER of demodulation performance test of R-FCH or R-DCCH receiver under RC4

Case	Data rate (bit/s)	FER limits (%)	
		Lower limit Eb/N0	Upper limit Eb/N0
A	14,400	2.2% @ 3.2 dB	0.4% @ 3.8 dB
	7,200	1.9% @ 3.9 dB	0.4% @ 4.5 dB
	3,600	1.9% @ 5.1 dB	0.5% @ 5.7 dB
	1,800	1.8% @ 7.0 dB	0.5% @ 7.6 dB
B	14,400	2.0% @ 3.8 dB	0.4% @ 4.4 dB
	7,200	2.0% @ 4.3 dB	0.5% @ 4.9 dB
	3,600	1.8% @ 5.6 dB	0.5% @ 6.2 dB
	1,800	1.8% @ 7.5 dB	0.5% @ 8.1 dB
C	14,400	1.6% @ 5.1 dB	0.6% @ 5.7 dB
	7,200	1.7% @ 5.6 dB	0.7% @ 6.2 dB
	3,600	1.5% @ 6.7 dB	0.6% @ 7.3 dB
	1,800	1.6% @ 8.4 dB	0.7% @ 9 dB
D	14,400	2.0% @ 4.6 dB	0.5% @ 5.2 dB
	7,200	2.0% @ 5.1 dB	0.5% @ 5.7 dB
	3600	1.9% @ 6.3 dB	0.5% @ 6.9 dB
	1,800	1.8% @ 8.1 dB	0.6% @ 8.7 dB

Table A-22 Maximum FER of demodulation performance test of R-SCH(Turbo Code) receiver under RC4

Case	Data rate (bit/s)	FER limits (%)	
		Lower limit Eb/N0	Upper limit Eb/N0
B	230,400	10% @ 2.4 dB	1.4% @ 3.0 dB
	115,200	9.0% @ 2.5 dB	2.3% @ 3.1 dB
	57,600	9.0% @ 2.6 dB	2.2% @ 3.2 dB
	28,800	7.5% @ 2.8 dB	2.5% @ 3.4 dB

Table A-23 Maximum FER of demodulation performance test of R-SCH (Turbo Code) receiver under RC4

Case	Data rate (bit/s)	FER limits (%)	
		Lower limit Eb/N0	Upper limit Eb/N0
B	230,400	10% @ 1.1 dB	2.0% @ 1.7 dB
	115,200	10% @ 1.0 dB	1.5% @ 1.7 dB
	57,600	11% @ 1.5 dB	1.8% @ 2.1 dB
	28,800	10% @ 2.1 dB	2.0% @ 2.7 dB

A.1.4 Receiving Performance

I. Sensitivity

450MHz band:

The R-TCH FER shall be <1.0% with 95% confidence when -127dBm/1.23MHz CDMA RC3 signal level is inputted at BTS RF main and diversity input ports.

800MHz band:

The R-TCH FER shall be <1.0% with 95% confidence when -128dBm/1.23MHz CDMA RC3 signal level is inputted at BTS RF main and diversity input ports.

II. Receiver dynamic range

450MHz band:

The R-TCH FER shall be 1.0% or less with 95% confidence when -127dBm/1.23MHz~-65dBm/1.23MHz CDMA signal level is inputted at BTS RF main and diversity input ports.

800MHz band:

The R-TCH FER shall be 1.0% or less with 95% confidence when -128dBm/1.23MHz~-65dBm/1.23MHz CDMA signal level is inputted at BTS RF main and diversity input ports.

III. Single-tone desensitization

450MHz band:

Input the single-tone interference deviated from the center frequency at the BTS RF input port: when the single-tone interference deviates from the center frequency 900 kHz and 900 kHz, the input single-tone interference power is 87dB higher than the output power of the mobile station simulator. When R-TCH FER maintains <1.5%, the output power of mobile station simulator changes less than 3dB whether there is single-tone interference or not.

800MHz band:

Input the single-tone interference deviated from the center frequency at the BTS RF input port: when the single-tone interference deviates from the center frequency about +750kHz and -750kHz, the input single-tone interference power is 50dB higher than the output power of the mobile station simulator; when the single-tone interference deviates from the center frequency +900kHz and -900kHz, the input single-tone interference power is 87dB higher than the output power of the mobile station simulator.

When R-TCH FER maintains <1.5%, the output power of mobile station simulator changes less than 3dB whether there is single-tone interference or not.

IV. Intermodulation spurious response attenuation

Input two single-tone interference of center frequency at the BTS RF input port: both deviate from the center frequency 900 kHz and 1700 kHz respectively, and 900 kHz and 1700 kHz respectively, the input single-tone interference power is 72dB higher than the output power of the mobile station simulator. When R-TCH FER keeps <1.5%, the output power of the mobile station simulator changes less than 3dB whether there are two single-tone interference or no interference.

V. Adjacent channel selectivity

The output power of the mobile station simulator shall increase by no more than 3 dB and the FER shall be less than 1.5% with 95% confidence.

A.1.5 Limitation on Emission

I. Conducted spurious emission

At BTS RF input port, the conducted spurious emissions within the BTS receiving frequency range is <-80dBm/30kHz.

At BTS RF input port, the conducted spurious emissions within the transmitting frequency range is <-60dBm/30kHz.

At BTS RF input port, the conducted spurious emissions within other frequency range of 0~6GHz is <-47dBm/30kHz.

II. Radiated spurious emission

The radiated spurious emission is in compliant with local radio specifications.

A.1.6 RSQI

Received Signal Quality Indicator (RSQI) is defined as the signal-to-noise ratio Eb/N0, where Eb is the energy per bit including the pilot and power control overhead and N0 is the total received noise-pulse-interference power in the CDMA bandwidth including the interference from other subscribers. The RSQI report values are list in. Table A-24

Table A-24 RSQI range

Eb/N0 (dB) per input port	Minimum acceptable report value	Maximum acceptable report value
4	10	18
5	12	20

Eb/N0 (dB) per input port	Minimum acceptable report value	Maximum acceptable report value
6	14	22
7	16	24
8	18	26
9	20	28
10	22	30
11	24	32
12	26	34
13	28	36
14	30	38

A.2 Performance of Transmitter

A.2.1 Frequency Requirement

I. Frequency coverage

450MHz band: 460 - 470MHz

800MHz band: 869 - 894MHz

II. Frequency tolerance

Within the working temperature range, the average difference between the actual carrier frequency of CDMA transmit sector and the carrier frequency of the dedicated transmit sector is less than $\pm 5\times 10^{-8}$($\pm$0.05ppm) of the designated frequency.

A.2.2 Modulation Requirement

I. Synchronization and timing

Time tolerance for pilot frequency: The pilot time alignment error should be less than 3 μs and shall be less than 10 μs. For base stations supporting multiple simultaneous CDMA Channels, the pilot time tolerance of all CDMA Channels radiated by a base station shall be within ±1 μs of each other.

Time tolerance of pilot channel and other code-division channels: in the same CDMA channel, time error between the pilot channel and other forwarding code-division channels is <±50ns.

The phase differences between the Pilot Channel and all other code channels sharing the same Forward CDMA Channel should not exceed 0.05 radians and shall not exceed 0.15 radians.

II. Waveform quality

The normalized cross correlation coefficient, , shall be greater than 0.912 (excess power < 0.4 dB).

A.2.3 RF Output Power Requirement

I. Total power

Total power is the mean power delivered to a load with resistance equal to the nominal load impedance of the transmitter. The total power of this system is +43dBm (20W), the deviation in all kinds of environmental conditions shall not exceed +2dB and -4dB.

II. Pilot power

The Pilot Channel power to total power ratio shall be within ±0.5 dB of the configured value.

III. Code domain power

For RC1and RC2, the code domain power in each inactive W_n^{64} channel shall be 27 dB or more below the total output power.

For RC3 and RC4, the code domain power in each inactive W_n^{128} channel shall be 30 dB or more below the total output power. .

For RC1 and RC2, the code domain power in each inactive W_n^{256} channel shall be 33 dB or more below the total output power of each carrier.

A.2.4 Limitation on Emission

I. Conducted spurious emission

The requirements on Conducted Spurious Emissions vary with frequency bands, as shown in Table A-25. Local radio requirements should also be observed.

Table A-25 Conducted Spurious Emissions Performance

Offset from carrier central frequency	Spurious requirement	
750 kHz~1.98 MHz	-45 dBc / 30 kHz	
1.98 MHz~4.00 MHz	-60 dBc / 30 kHz; Pout ⩾ 33 dBm -27 dBm / 30 kHz; 28 dBm ⩽ Pout < 33 dBm -55 dBc / 30 kHz; Pout < 28 dBm	
> 4.00 MHz (ITU Class A Requirement)	-13 dBm / 1 kHz; -13 dBm / 10 kHz; -13 dBm/100 kHz; -13 dBm / 1 MHz;	9 kHz < f < 150 kHz 150 kHz < f < 30 MHz 30 MHz < f < 1 GHz 1 GHz < f < 5 GHz

Offset from carrier central frequency	Spurious requirement	
> 4.00 MHz (ITU Class B Requirement)	-36 dBm / 1 kHz; -36 dBm / 10 kHz; -36 dBm/100 kHz; -30 dBm / 1 MHz;	9 kHz < f < 150 kHz 150 kHz < f < 30 MHz 30 MHz < f < 1 GHz 1 GHz < f < 12.5 GHz

II. Radiated spurious emission

The radiated spurious emission complies with local radio specifications.

Appendix B EMC Performance

ETSI EN 300 386 Electromagnetic Compatibility and Radio Spectrum Matters (ERM); Telecommunication network Equipment. ElectroMagnetic Compatibility (EMC) Requirements are the EMC standards of telecommunication equipment globally applicable. EMC Performance of BTS complies with ETSI EN 300 386 V1.2.1 (2000-03). They are described in two aspects: EMI (EelectroMagnetic Interference) and EMS (ElectroMagnetic Sensitivity).

B.1 EMI Performance

I. Conductive Emission (CE) at DC input/output port

CE performance indices are listed in Table B-1.

Table B-1 CE index at -48V port

Frequency range	Threshold (dBμV)	
	Average	Quasi-peak
0.15 ~ 0.5MHz	56~46	66~56
0.5 ~ 5MHz	46	56
5 ~ 30MHz	50	60

II. Radiated Emission (RE)

RE performance indices are listed in Table B-2.

Table B-2 RE performance requirement

Band (MHz)	Threshold of quasi-peak (dBμV/m)
30 ~ 1,000	61.5
1,000 ~ 12,700	67.5

Note:

Test place is arranged according to ITU-R 329-7 [1].

B.2 EMS Performance

I. R-F anti-electromagnetic interference (80MHz~1000MHz)

Values of RF anti-EMI test are listed in Table B-3.

Table B-3 Values of RF anti-EMI test

Test port	Test level	Performance class
Whole cabinet	3V/m	A

Note:

Test method is the same as IEC1000-4-3 [9].

II. Voltage drop anti-interference

Among all test items of EMS, the requirement for resisting continuous interference test is class A and the requirement for resisting transient interference test is class B. Requirement for power drop and level interruption is shown in Table B-4.

Table B-4 Requirement for power drop and level interruption

Test port	Test level	Performance class
AC port	Drop 30% Last for 10ms	A
	Drop 60% Last for 100ms	When there is backup power, A When there is no backup power, the communication link need not be maintained. It can be re-created and the user data can be lost.
	Drop over95% Last for 5000ms	When there is backup power, A When there is no backup power, the communication link need not be maintained. It can be re-created and the user data can be lost.

Note:

Test method is the same as IEC61000-4-11 [13].

III. Electrostatic Discharge (ESD)

Requirement for ESD test level is shown in Table B-5.

Table B-5 Requirement for ESD test level

Discharge mode	Test level	Performance class
Contact	2kV, 4kV	B
Air	2kV, 4kV, 8kV	B

Note:

1. Test method is the same as IEC 61000-4-2 [5].
2. ESD should be performed to all exposed surface of equipment to be tested except those to be protected as required by the user's document.

IV. RF conductive anti-interference

In CDMA equipment, the port where a cable of more than 1 meter may be connected to, including control port, DC input/output port and the input/output port of the connection line when cabinets are combined, should satisfy the requirement for RF conductive anti-interference. Voltage level is shown in Table B-6.

Table B-6 Voltage level

Test port	Voltage level	Performance class
DC line port	3V	A
AC line port		
Signal line port and control line port		

Note:

Test method is the same as IEC61000-4-6 [9].

V. Surge

For CDMA equipment, the DC power input port, indoor signal line of more than 3 m, control line (such as E1 trunk line, serial port line) and the cable that may be led out to the outdoor should all satisfy the requirement for surge interference level. The test level is shown in Table B-7.

Table B-7 Test level

Test port	Test level	Performance class
AC port	Line~line, 2kV Line~ground, 4kV	B

Test port	Test level	Performance class
Control line, signal line	Line~line, 0.5kV Line~ground, 1kV	B
Control line, signal line (outdoor)	Line~line, 1kV Line~ground, 2kV	B

Note:

The test method is the same as IEC61000-4-5 [11].

VI. Common-mode fast transient pulse

The signal and data lines between CDMA cabinets and that connected with other systems (such as E1 trunk line), control line and cable connected to DC input/output port, should be the requirement for fast transient pulse anti-interference level. The threshold value is shown in Table B-8.

Table B-8 Threshold value

Test port	Test level	Performance class
Signal control line port	0.5kV	B
DC line input/output port	1kV	B
AC line input port	2kV	B

Note:

Performance class A: it means that BTS can withstand the test without any damage and it can run normally in the specified range. There is not any change in the software or data (all data in the storage or the data being processed) related to the tested switching equipment. Equipment performance is not lowered.

Performance class B: it means that BTS can withstand the test without any damage. There is no change in the software or the data in storage. Communication performance is lowered a little, but in the tolerance (as defined for different products). The existing communication link is not interrupted. After the test, the equipment can recover to the normal status before the test automatically without any interference of the operator.

Performance class C: some functions of BTS are lost temporarily during the test, but they will recover to normal performance in a specific period after the test (normally the shortest time needed for system reboot). There is no physical damage or system software deterioration.

Performance class R: after the test, there is no physical damage or fault (including software corruption) with BTS. Protection equipment damage caused by external interference signal is acceptable. When the protection equipment is replaced and the running parameters are re-configured, the equipment can operate normally.

Appendix C Environment Requirement

BTS3601C environment requirements involve storage, transportation, and operation environments. These requirements are specified based on the following standards:

- ETS 300019 Equipment Engineering (EE); Environmental conditions and environmental tests for telecommunications equipment
- IEC 60721 Classification of environmental conditions

C.1 Storage Environment

I. Climate environment

Table C-1 Requirements on climate environment

Item	Range
Altitude	⩽5000m
Air pressure	70kPa~106kPa
Temperature	-40~+70 Celsius degree
Temperature change rate	⩽1 Celsius degree/min
Relative humidity	10%~100%
Solar radiation	⩽1120W/s²
Thermal radiation	⩽600W/s²
Wind speed	⩽30m/s
Rain	Drippings

II. Biotic environment

- No microorganism like fungal or mould multiplied around or inside.
- Free from the attack of rodential animals (such as rats).

III. Air cleanness

- No explosive, electrically/magnetically conductive, or corrosive particles around.
- The density of physical active substances shall meet the requirements listed in Table C-2.

Table C-2 Requirements on the density of physical active substances

Physical active substance	Unit	Content
Suspending dust	mg/m³	⩽5.00
Falling dust	mg/m² h	⩽20.0
Sands	mg/m³	⩽300
Note: Suspending dust: diameter ⩽75μm Falling dust: 75μm⩽diameter⩽150μm Sands: 150μm⩽diameter⩽1,000μm		

- The density of chemical active substances shall meet the requirements listed in Table C-3.

Table C-3 Requirements on the density of chemical active substances

Chemical active substance	Unit	Content
SO_2	mg/m³	⩽0.30
H_2S	mg/m³	⩽0.10
NO_2	mg/m³	⩽0.50
NH_3	mg/m³	⩽1.00
Cl_2	mg/m³	⩽0.10
HCl	mg/m³	⩽0.10
HF	mg/m³	⩽0.01
O_3	mg/m³	⩽0.05

IV. Mechanical stress

Table C-4 Requirements on mechanical stress

Item	Sub-item	Range	
Sinusoidal vibration	Displacement	⩽7.0mm	-
	Acceleration	-	⩽20.0m/s²
	Frequency range	2~9Hz	9~200Hz
Unsteady impact	Impact response spectrum II	⩽250m/s²	
	Static load capability	⩽5kPa	
Note: Impact response spectrum: The max. acceleration response curve generated by the equipment under the specified impact excitation. Impact response spectrum II indicates that the duration of semi sinusoidal impact response spectrum is 6ms. Static load capability: The capability of the equipment in package to bear the pressure from the top in normal pile-up method.			

C.2 Transportation Environment

I. Climate environment

Table C-5 Requirements on climate environment

Item	Range
Altitude	⩽5,000m
Air pressure	70kPa~106kPa
Temperature	-40~+70 Celsius degree
Temperature change rate	⩽3 Celsius degree/min
Relative humidity	10%~100%
Solar radiation	⩽1,120W/s²
Thermal radiation	⩽600W/s²
Wind speed	⩽30m/s

II. Biotic environment

- No microorganism like fungal or mould multiplied around or inside.
- Free from the attack of rodential animals (such as rats).

III. Air cleanness

- No explosive, electrically/magnetically conductive, or corrosive particles around.
- The density of physical active substances shall meet the requirements listed in Table C-6.

Table C-6 Requirements on the density of physical active substances

Physical active substance	Unit	Content
Suspending dust	mg/m³	No requirement
Falling dust	mg/m² h	⩽3.0
Sands	mg/m³	⩽100
Note: Suspending dust: diameter ⩽75μm Falling dust: 75μm⩽diameter⩽150μm Sands: 150μm⩽diameter⩽1,000μm		

- The density of chemical active substances shall meet the requirements listed in Table C-7.

Table C-7 Requirements on the density of chemical active substances

Chemical active substance	Unit	Content
SO_2	mg/m³	⩽0.30
H_2S	mg/m³	⩽0.10
NO_2	mg/m³	⩽0.50
NH_3	mg/m³	⩽1.00
Cl_2	mg/m³	⩽0.10
HCl	mg/m³	⩽0.10
HF	mg/m³	⩽0.01
O_3	mg/m³	⩽0.05

IV. Mechanical stress

Table C-8 Requirements on mechanical stress

Item	Sub-item	Range		
Sinusoidal vibration	Displacement	⩽7.5mm	-	-
	Acceleration	-	⩽20.0m/s²	⩽40.0m/s²
	Frequency range	2~9Hz	9~200Hz	200~500Hz
Random vibration	Acceleration spectrum density	10m²/s³	3m²/s³	1m²/s³
	Frequency range	2~9Hz	9~200Hz	200~500Hz
Unsteady impact	Impact response spectrum II	⩽300m/s²		
	Static load capability	⩽10kPa		

Item	Sub-item	Range
Note: Impact response spectrum: The max. acceleration response curve generated by the equipment under the specified impact excitation. Impact response spectrum II indicates that the duration of semi sinusoidal impact response spectrum is 6ms. Static load capability: The capability of the equipment in package to bear the pressure from the top in normal pile-up method.		

C.3 Operation Environment

I. Climate environment

Table C-9 Requirements on temperature and humidity

Product	Temperature	Relative humidity
BTS3601C	-40~+55 Celsius degree	5%~100%
Note: The measurement point of temperature and humidity is 2 m above the floor and 0.4 m in front of the equipment, when there are no protective panels in front of and behind the cabinet.		

Table C-10 Requirements on other climate environment

Item	Range
Altitude	⩽4000m
Air pressure	70kPa~106kPa
Temperature change rate	⩽5 Celsius degree/min
Solar radiation	⩽1120W/m²
Rain	⩽12.5L/min±0.625 L/min (IPX5)
Wind speed	⩽50m/s

II. Biotic environment

- No microorganism like fungal or mould multiplied around or inside.
- Free from the attack of rodential animals (such as rats).

III. Air cleanness

- No explosive, electrically/magnetically conductive, or corrosive particles around.
- The density of physical active substances shall meet the requirements listed in Table C-11.

Table C-11 Requirements on the density of physical active substances

Physical active substance	Unit	Content
Suspending dust	mg/m³	⩽5
Falling dust	mg/m² h	⩽20
Sands	mg/m³	⩽300

Physical active substance	Unit	Content
Note: Suspending dust: diameter ⩽75μm Falling dust: 75μm⩽diameter⩽150μm Sands: 150μm⩽diameter⩽1,000μm		

- The density of chemical active substances shall meet the requirements listed in Table C-12.

Table C-12 Requirements on the density of chemical active substances

Chemical active substance	Unit	Content
SO_2	mg/m³	⩽0.30
H_2S	mg/m³	⩽0.10
NH_3	mg/m³	⩽1.00
Cl_2	mg/m³	⩽0.10
HCl	mg/m³	⩽0.10
HF	mg/m³	⩽0.01
O_3	mg/m³	⩽0.05
NO_x	mg/m³	⩽0.05
Soft mist	-	Yes

IV. Mechanical stress

Table C-13 Requirements on mechanical stress

Item	Sub-item	Range	
Sinusoidal vibration	Displacement	⩽3.5mm	-
	Acceleration	-	⩽10.0m/s²
	Frequency range	2~9Hz	9~200Hz
Unsteady impact	Impact response spectrum II	⩽100m/s²	
	Static load capability	0	
Note: Impact response spectrum: The max. acceleration response curve generated by the equipment under the specified impact excitation. Impact response spectrum II indicates that the duration of semi sinusoidal impact response spectrum is 6ms. Static load capability: The capability of the equipment in package to bear the pressure from the top in normal pile-up method.			

Appendix E Standard Compliance

E.1 General Technical Specification

TIA/EIA-97-D: Recommended Minimum Performance Standards for Base Stations Supporting Dual-mode Spread Spectrum Mobile Stations

General Technical Requirements: FEDERAL IMT-MC (CDMA 2000) CELLULAR MOBILE SYSTEM OPERATING IN BAND 450 MHZ

E.2 Um Interface

I. Physical layer

TIA/EIA IS-2000-2-A: Physical Layer Standard for cdma2000 Spread Spectrum Systems

II. MAC layer

TIA/EIA IS-2000-3-A: Medium Access Control (MAC) Standard for cdma2000 Spread Spectrum Systems

III. Service capability

TSB2000: Capabilities Requirements Mapping for cdma2000 standards

E.3 Abis Interface

I. Physical layer

- E1 interface

E1 Physical Interface Specification, September 1996

- SDH STM-1

ANSI T1.101: Synchronization Interface Standard

ITU-T G.707: (3/96) Network node interface for the synchronous digital hierarchy (SDH)

ITU-T G.703: (10/98) Physical/electrical characteristics of hierarchical digital interfaces

ITU-T G.957: Optical interface for equipment and systems relating to the synchronous digital hierarchy

ITU-T G.958: Digital line systems based on the synchronous digital hierarchy for use on optical fiber cables

- ATM

AF-PHY-0086.001: Inverse Multiplexing for ATM (IMA) Specification Version 1.1

ATM Forum af-phy-0064.000

ATM Forum af-phy-0130.000

ATM on Fractional E1/T1, October 1999

II. ATM layer

ANSI T1.627-1993: Telecommunications broadband ISDN-ATM Layer Functionality and specification

III. ATM adaptation layer

ITU-T recommendation I.366.2: B-ISDN ATM Adaptation Layer Type 2 Specification

ITU-T I.363.5: B-ISDN ATM Adaptation Layer 5 Specification: Type 5 AAL

IV. TCP/IP

RFC791: Internet Protocol

RFC793: Transport Control Protocol

V. Abis interface high layer protocol

3GPP2 A.R0003: Abis interface technical report for cdma2000 1X Spread Spectrum System

VI. Self-defined standard

cdma2000 1X Abis Interface High Layer Protocol

E.4 Lightning Protection

IEC 61312-1(1995) Protection Against Lightning Electromagnetic Impulse Part I: General Principles

IEC 61643-1(1998) Surge Protective devices connected to low-voltage power distribution systems

ITU-T K.11 (1993) Principles of Protection Against Over-voltage and Over-current.

ITU-T K.27 (1996) Bonding Configurations and Earthing Inside a Telecommunication Building

ETS 300 253(1995) Equipment Engineering; Earthing and bonding of telecommunication equipment in telecommunication centers

E.5 Safety

IEC60950 Safety of information technology equipment including Electrical Business Equipment

IEC60215 Safety requirement for radio transmitting equipment

CAN/CSA-C22.2 No 1-M94 Audio, Video and Similar Electronic Equipment

CAN/CSA-C22.2 No 950-95 Safety of Information Technology Equipment Including Electrical Business Equipment.

UL 1419 Standard for Professional Video and Audio Equipment

73/23/EEC Low Voltage Directive

UL 1950 Safety of information technology equipment including Electrical Business Equipment

IEC60529 Classification of degrees of protection provided by enclosure (IP Code).

GOST 30631-99. General Requirements to machines, instruments and other industrial articles on stability to external mechanical impacts while operating;

GOST R 50829-95. Safety of radio stations, radio electronic equipment using transceivers and their components. The general requirements and test methods;

GOST 12.2.007.0-75. Electrotechnical devices. The general safety requirements.

E.6 EMC

TS 25.105; 3rd Generation Partnership Project; TSG RAN WG4; UTRA (BS) TDD; Radio transmission and reception89/336/EEC EMC directive Council directive of 3 May 1989 on approximation of laws of the Member States relating to electromagnetic compatibility;

CISPR 22 (1997): "Limits and methods of measurement of radio disturbance characteristics of information technology equipment";

Section 3: Limitation of voltage fluctuations and flicker in low-voltage supply systems for equipment with rated current = 16 A"

IEC 61000-4-2 (1995): " Electromagnetic compatibility (EMC) - Part 4: Testing and measurement techniques Section 2: Electrostatic discharge immunity test";

IEC 61000-4-3 (1995): " Electromagnetic compatibility (EMC) - Part 4: Testing and measurement techniques Section 3: Radiated, radio-frequency electromagnetic field immunity test";

IEC 61000-4-4 (1995): " Electromagnetic compatibility (EMC) - Part 4: Testing and measurement techniques Section 4: Electrical fast transient/burst immunity test";

IEC 61000-4-5 (1995): " Electromagnetic compatibility (EMC) - Part 4: Testing and measurement techniques Section 5: Surge immunity test";

IEC 61000-4-6 (1996): " Electromagnetic compatibility (EMC) - Part 4: Testing and measurement techniques Section 6: Immunity to contacted disturbances, induced by radio frequency fields";

IEC 61000-4-11 (1994): " Electromagnetic compatibility (EMC) - Part 4: Testing and measurement techniques Section 11: Voltage dips, short interruptions and voltage variations. Immunity tests";

ITU-T Recommendation K.20, Resistibility of Telecommunication Switching Equipment to Overvoltages and Overcurrents;

CFR 47, FCC Part 15-Radio Frequency Device;

TS 25.113v3.1.0, 3rd Generation Partnership Project; Technical Specification Group Radio Access Networks; Base station EMC;

ITU-R Rec. SM.329-7: "Spurious emissions";

GOST R 51318.22-99: Electromagnetic compatibility of technical equipment. Man-made noise from informational equipment. Limits and test methods;

GOST 30429-96. "Electromagnetic compatibility of technical equipment. Man-made noise from equipment and apparatus used together with service receiver systems of civil application. Limits and Test methods.

E.7 Environment

IEC 60529 "Degrees of protection provided by enclosure (IP code)"

IEC 60721-3-1"Classification of environmental conditions- Part3: Classification of groups of environmental parameters and their severities-Section 1: Storage";

IEC 60721-3-2"Classification of environmental conditions- Part3: Classification of groups of environmental parameters and their severities-Section 2: Transportation";

IEC 60721-3-3 (1994) "Classification of environmental conditions - Part 3: Classification of groups of environmental parameters and their severities - Section 3: Stationary use at weather protected locations";

IEC 60721-3-4 (1995): "Classification of environmental conditions - Part 3: Classification of groups of environmental parameters and their severities - Section 4: Stationary use at non-weather protected locations";

ETS 300 019-2-1 "Equipment Engineering (EE); Environmental conditions and environmental tests for telecommunications equipment; Part2-1, Specification of environmental tests Storage";

ETS 300 019-2-2 "Equipment Engineering (EE); Environmental conditions and environmental tests for telecommunications equipment; Part2-2, Specification of environmental tests Transportation";

ETS 300 019-2-3 "Equipment Engineering (EE); Environmental conditions and environmental tests for telecommunications equipment; Part2-3, Specification of environmental tests Transportation Stationary use at weather-protected locations";

ETS 300 019-2-3 "Equipment Engineering (EE); Environmental conditions and environmental tests for telecommunications equipment; Part2-3, Specification of environmental tests Transportation Stationary use at non-weather-protected locations";

IEC 60068-2-1 (1990): "Environmental testing - Part 2: Tests. Tests A: Cold";

IEC 60068-2-2 (1974): "Environmental testing - Part 2: Tests. Tests B: Dry heat";

IEC 60068-2-6 (1995): "Environmental testing - Part 2: Tests - Test Fc: Vibration (sinusoidal)".

GOST 15150-69: Machines, instruments and other industrial articles. Applications for different climatic regions. Categories, operating, storage and transportation conditions in compliance with the environmental factors";

GOST 23088-80. "Electronic equipment. Requirements to packing and transportation and test methods".

Appendix F Abbreviation

F.1 Abbreviation of Modules

MAPM	Micro-bts Ac-dc Power supply Module
MASU	Micro-bts Access SDH Unit
MBBP	Micro-bts Baseband Backplane
MBKP	Micro-bts Backplane
MBPB	Micro-bts Base-band Processing Board
MBPM	Micro-bts Base-band Processing Module
MDPM	Micro-bts Dc-dc Power supply Module
MFEM	Micro-bts Radio Frequency Front End Module
MLNA	Micro-bts Low-Noise Amplifier
MMCB	Micro-bts Monitor & Control Board
MPAU	Micro-bts Power Amplifier Unit
MPAM	Micro-bts Power Amplifier Module
MRDU	Micro-bts Divide And Duplexer Receive Filter Unit
MSPB	Micro-bts E1 Surge Protector Board
MTRB	Micro-bts Transceiver Board
MTRM	Micro-bts Transceiver Module

F.2 Glossary

3GPP2	3rd Generation Partnership Project 2
A	Availability
A1/A2/A5	
A3/A7	
A8/A9	
A10/A11	
AAA	Authorization, Authentication and Accounting
AAL2	ATM Adaptation Layer 2
AAL5	ATM Adaptation Layer 5
Abis	
AC	Authentication Center
A/D	Analog/Digit
ADC	Analog Digit Converter
ANSI	American National Standards Institute
ARQ	Automatic Repeat Request
ATM	Asynchronous Transfer Mode
AUC	Authentication
BAM	Back Administration Module
BPSK	Binary Phase Shift Keying
BS	Base Station
BSC	Base Station Controller
BSS	Base Station Subsystem
BTS	Base Transceiver Station
CCITT	International Telegraph and Telephone Consultative Committee
CDMA	Code Division Multiple Access
CEs	Channel Elements
CLI	Command Line Interpreter
CLK	Clock
CM	Connection Management

CN	Core Network
CTC	Common Transmit Clock
D/A	Digit/Analog
DAC	Digit Analog Converter
DAGC	Digit Automatic Gain Control
DC	Direct Current
DCE	Data Communications Equipment
EIA	Electronics Industry Association
EIB	Erasure Indicator Bit
EIR	Equipment Identity Register
EMC	Electro Magnetic Compatibility
EMI	Electro Magnetic Interference
FA	Foreign Agent
F-APICH	Forward Assistant Pilot Channel
F-ATDPICH	Forward Transmit Diversity Assistant Pilot Channel
F-BCH	Forward Broadcast Channel
FCACH	Forward Common Assignment Channel
F-CCCH	Forward Common Control Channel
F-CPCCH	Forward Common Power Control Channel
F-DCCH	Forward Dedicated Control Channel
FER	Frame Error Rate
F-FCH	Forward Fundamental Channel
F-PCH	Forward Paging Channel
F-PICH	Forward Pilot Channel
F-QPCH	Forward Quick Paging Channel
F-SCCH	Forward Supplemental Code Channel
F-SCH	Forward Supplemental Channel
F-SYNCH	Forward Sync Channel
F-TCH	Forward Traffic Channel
F-TDPICH	Forward Transmit Diversity Pilot Channel
FTP	File Transfer Protocol
GLONASS	Global Navigation Satellite System
GMSC	Gateway Mobile-services Switching Centre
GPS	Global Positioning System
GRIL	GPS/GLONASS Receiver Interface Language
GUI	Graphics User Interface
HA	Home Agent
HDLC	High level Data Link Control
HLR	Home Location Register
HPAU	High Power Amplifier Unit
HPSK	Hybrid Phase Shift Keying
ICP	IMA Control Protocol
IF	Intermediate Frequency
IMA	Inverse Multiplexing for ATM
IP	Internet Protocol
IPOA	IP over ATM
ISDN	Integrated Services Digital Network
ITC	Independent Transmit Clock
ITU	International Telecommunications Union
ITU-T	ITU Telecommunication Standardization Sector
IWF	Interworking Function
LAC	Link Access Control
LMF	Local Maintenance Function
LNA	Low-Noise Amplifier
MAC	Medium Access Control
MML	Man-Machine Language
Modem	Modulator-Demodulator

MPU	Micro Process Unit
MS	Mobile Station
MSC	Mobile Switching Center
MTBF	Mean Time Between Failures
MTTR	Mean Time To Repair
NID	Network Identification
OAM	Operation, Administration and Maintenance
OCXO	Oven voltage Control Oscillator
OEM	Original Equipment Manufacturer
OMC	Operation & Maintenance Center
OML	Operation & Maintenance Link
OMU	Operation & Maintenance Unit
OQPSK	Offset Quadrature Phase Shift Keying
OTD	Orthogonal Transmit Diversity
PCF	Packet Control Function
PDSN	Packet Data Service Node
PGND	Protection Ground
PLMN	Public Land Mobile Network
PN	Pseudo Noise
PSPDN	Packet Switched Public Data Network
PSTN	Public Switched Telephone Network
PSU	Power Supply Unit
PVC	Permanent Virtual Channel
PVP	Permanent Virtual Path
PWM	Pulse-Width Modulation
QIB	Quality Identification Bit
QoS	Quality of Service
QPSK	Quadrature Phase Shift Keying
R-ACH	Reverse Access Channel
RC	Radio Configuration
RC1	Radio Configuration 1
RC2	Radio Configuration 2
RC3	Radio Configuration 3
RC4	Radio Configuration 4
R-CCCH	Reverse Common Control Channel
R-DCCH	Reverse Dedicated Control Channel
R-EACH	Reverse Enhanced Access Channel
RF	Radio Frequency
R-FCH	Reverse Fundamental Channel
RLP	Radio Link Protocol
RM	Radio Management
R-PICH	Reverse Pilot Channel
R-SCCH	Reverse Supplemental Code Channel
R-SCH	Reverse Supplemental Channel
RSQI	Receive Signal Quality Indicator
R-TCH	Reverse Traffic Channel
SDH	Synchronous Digital Hierarchy
SDU	Selection/Distribution Unit
SID	System Identification
SME	Signaling Message Encryption
SPU	Signaling Process Unit
SRBP	Signaling Radio Burst Protocol
SSSAR	Special Service Segmentation and Reassemble
STM-1	Synchronization Transfer Mode 1
STS	Space Time Spreading
TA	Timing Advance
TA	Terminal Adapter

TAm	Mobile Terminal Adapter
TCP	Transport Control Protocol
TDMA	Time Division Multiple Access
TE1	Terminal Equipment 1
TE2	Terminal Equipment 2
TIA	Telecommunications Industry Association
TMSI	Temp Mobile Subscriber Identifier
TRX	Transceiver
UART	Universal Asynchronous Receiver/Transmitter
Um	
UTC	Universal Coordinated Time
VCI	Virtual Channel Identifier
VLR	Visitor Location Register
VPI	Virtual Path Identifier

Table of Contents

Chapter 1 O&M System Overview.....1-1
1.1 Architecture.....1-1
1.1.1 Local O&M System.....1-1
1.1.2 Mobile Integrated Network Management System.....1-3
1.2 Functions of O&M System.....1-4
1.2.1 Near Maintenance Functions.....1-4
1.2.2 Remote Maintenance Functions.....1-5
Chapter 2 Maintenance Console Introduction.....2-1
2.1 Near Maintenance Console.....2-1
2.1.1 Startup of the Console.....2-1
2.1.2 Use of the Console.....2-1
2.2 Remote Maintenance Console.....2-3
2.2.1 Startup of the Console.....2-3
2.2.2 Use of the Console.....2-3
Chapter 3 Routine Maintenance Instructions.....3-1
3.1 Overview.....3-1
3.1.1 Purposes of Routine Maintenance.....3-1
3.1.2 Classification of Routine Maintenance Operations.....3-1
3.1.3 Usage of Routine Maintenance Records.....3-2
3.2 Monthly Maintenance Instructions.....3-7
3.3 Quarterly Maintenance Instructions.....3-7
3.4 Yearly Maintenance Instructions.....3-7
Chapter 4 Fault Analysis and Locating.....4-1
4.1 Fault Handling Process and Method.....4-1
4.1.1 Classification of Faults.....4-1
4.1.2 General Handling Procedure.....4-1
4.1.3 Conventional Methods for Fault Judgment and Location.....4-1
4.2 Typical Case Analysis.....4-4
4.2.1 Transmission Equipment Fault.....4-4
4.2.2 OML Fault.....4-5
4.2.3 Abis Signaling Link Fault.....4-6
4.2.4 Coverage Fault.....4-7
4.2.5 Service Fault.....4-8
4.2.6 O&M Fault.....4-12
Chapter 5 Part Replacement.....5-1
5.1 General Replacement Procedure.....5-1

5.1.1 Notes 5-1
5.1.2 Module Removal.....5-2
5.1.3 Module Installation.....5-2
5.1.4 Replacement Completion 5-3
5.2 Part Replacement.....5-3
5.2.1 Module Replacement 5-3
5.2.2 Optical Fiber Replacement 5-4

Appendix A Module Maintenance Window Introduction A-1
A.1 MBPM A-1
A.2 BTRM..... A-3
A.3 MPAM A-4
A.4 MFEM A-5
A.5 MAPM A-5

Appendix B Return Loss, VSWR and Reflection Coefficient B-1

Appendix C Near Command Index..... C-1

Chapter 1 O&M System Overview

1.1 Architecture

The Operation & Maintenance (O&M) system comprises the local O&M system and mobile integrated Network Management System (NMS). The former one performs at the local Base Station Subsystem (BSS) the O&M over the Base Transceiver Station (BTS) and Base Station Controller (BSC). The later one is the integrated NMS based on network elements such as BSC, Mobile Switching Center (MSC) and Home Location Register (HLR).

1.1.1 Local O&M System

BSS local O&M system structure is shown in Figure 1-1. In terms of the distance to the BTS, it is classified into two kinds: the near O&M part and remote O&M part.

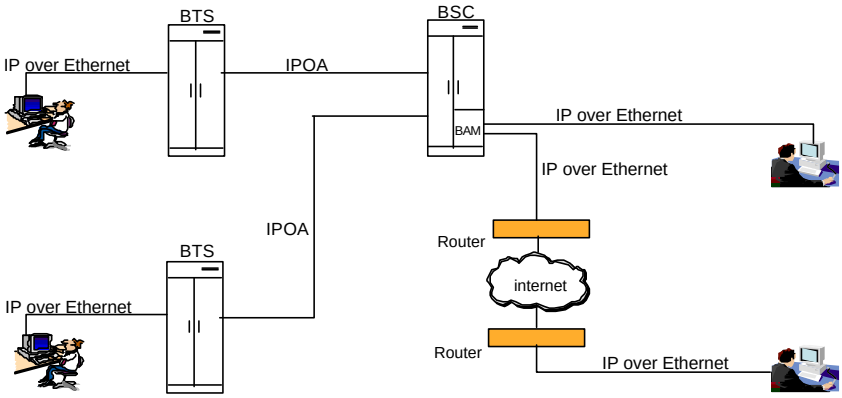

Figure 1-1 Structure of BSS local O&M system

I. Near O&M Part

The near O&M is realized through the near maintenance console, which is connected through 10/100Base-T Ethernet interface to the BTS3601C. The console performs O&M in the Telnet mode.

Telnet is an application of TCP/IP. Its communication is realized in the Client/Server mode. BTS3601C provides the Telnet server function. It receives the Man-Machine Language (MML) commands from Telnet Client (running on the local maintenance console). After executing the command, the BTS sends the execution result to the Telnet Client.

The user can perform data configuration and O&M over the BTS with the near MML commands.

II. Remote O&M Part

The remote O&M is realized through the remote maintenance console at BSC side, the remote O&M part is designed in Client/Server (C/S) structure. The user inputs operation commands via Clients (namely console), As the server, BAM will process commands from the Clients. After processing, BAM will send these commands to the foreground (including BSC and BTS) and wait for the response. Then BAM will record the corresponding operation result (such as success, failure, timeout, or abnormality) and send the result to the Client in a specified format. Through the maintenance console, a user can perform remote maintenance and monitoring over all the BTSs. Meanwhile, information from these BTSs can be collected for network planning and optimization.

BSS remote O&M functions comprises three parts according to its MML commands: Common Management, BSC Management and BTS management, as shown in Figure 1-2. Except that the BTS alarm management is classified into the common management, other O&M operations over the BTS are realized through the BTS management part.

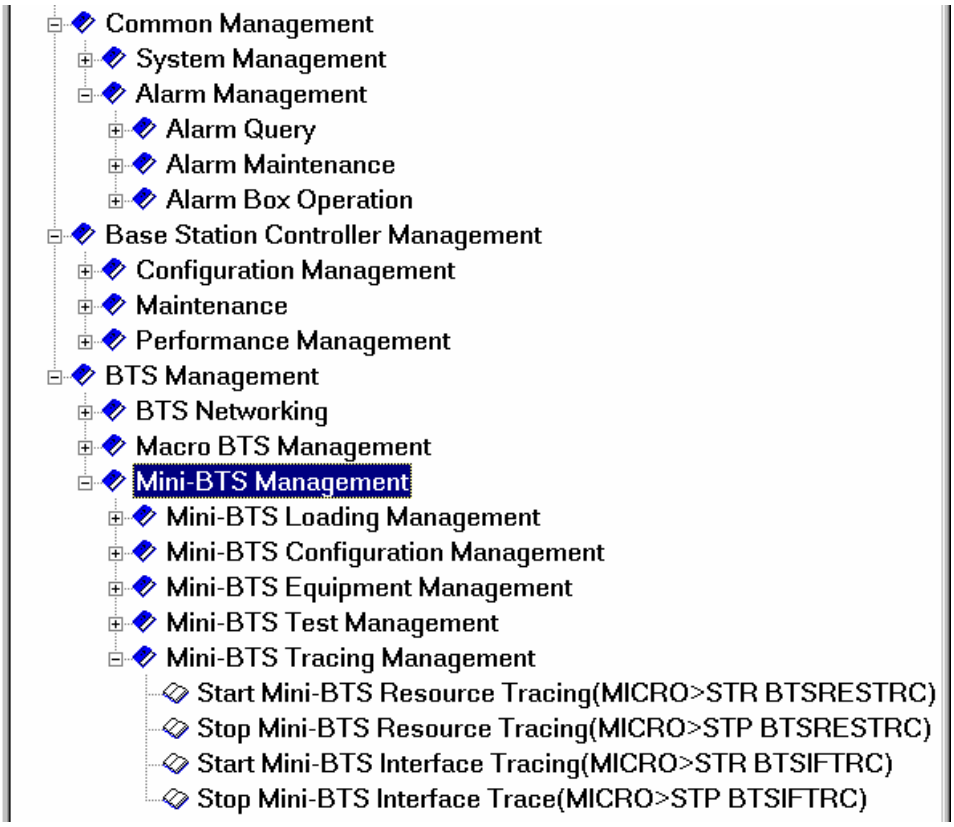

Figure 1-2 Remote maintenance Client command tree

Currently the remote O&M over both the cBTS3612 and BTS3601C can be performed at the same Client, with the BTS networking management as the common part of the cBTS3612 and BTS3601C management.

This chapter describes the use of the maintenance console for BTS3601C.

1.1.2 Mobile Integrated Network Management System

The mobile integrated NMS realizes the centralized maintenance function. It accesses the system via Local Area Network (LAN) or Wide Area Network (WAN), with the M2000 server as the core and multiple mobile equipments (such as BSC, MSC and HLR) as the network element.

BSC accesses the M2000 mobile integrated NMS via BAM. The O&M over the BTS is realized through BSC.

The typical networking of M2000 mobile integrated NMS is shown in Figure 1-3

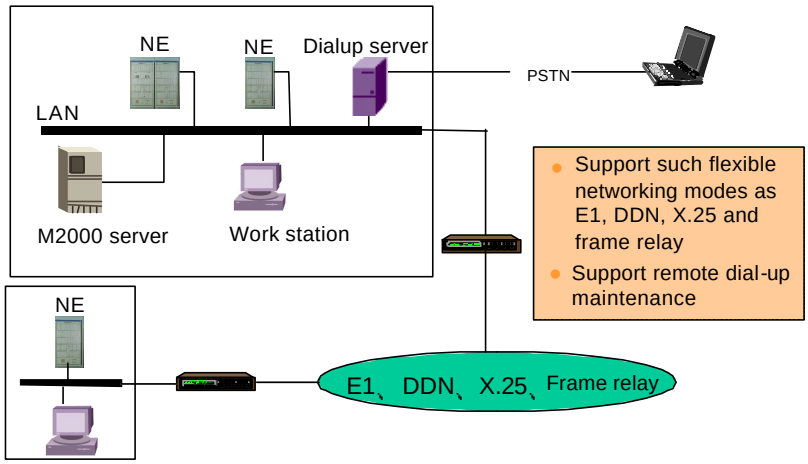

NE: Network element
PSTN: Public Switched Telephone Network
DDN: Digital Data Network
LAN: local area network

Figure 1-3 Networking of M2000 mobile integrated NMS

M2000 mobile integrated NMS performs such functions as configuration management, performance management and fault management.

- Configuration management function:

It is the function used to collect, store, query, and modify the data of the network elements within the network system.

- Performance management function:

This function is used to enable the user to register traffic measurement at the Client for network elements of the whole network, and to view the result of the measurement registered within the whole network.

- Fault management function:

This function enables the user to acquire the alarm data of the network elements within the whole network by setting conditions, to view the data and to conduct other operations at the alarm client.

1.2 Functions of O&M System

This section describes the functions of local O&M system. The functions of the mobile integrated NMS are described in the operation manual of M2000.

1.2.1 Near Maintenance Functions

The near maintenance console provides the function to configure and maintain the BTS.

I. Configuration function

The configuration function can be used to configure BTS basic information, including the configuration of cell, signaling/service link, clock parameters, channels, E1 Time Slots (TS), baseband board IP address, and so on.

II. Maintenance function

The maintenance function is used to perform the O&M of the BTS, including:

- Information query

The information that can be queried include: E1 TS configuration, board version, board electronic label, board status/special status, logs, interface status, alarms, baseband board IP address, and so on.

- Board operation

The board operations include: resetting, blocking/unblocking BTS resources, resource tracing, information tracing (e.g. the forward transmit power, RSSI value, etc.).

- Test

The test includes the board loopback test and BTS E1 link test.

- Tracing management

Tracing management includes specific resource tracing and interfaces messages tracing.

Besides, BTS3601C provides other functions including user authority management, password setting, BTS power management, help information, etc.

1.2.2 Remote Maintenance Functions

With regard to the BTS management, the remote maintenance console provides not only the functions that the near console provides, but also the alarm management and BTS networking function.

This section describes the functions of the remote maintenance console. For detailed command information, please refer to the corresponding online help.

I. Alarm management:

Figure 1-4 shows the alarm management functions.

The alarm management function is used to manage the alarm information. Being the indication of the current and historical equipment operation statuses, the alarm information is the major basis on which the equipment maintenance is performed. The maintenance personnel can maintain the equipment according to the alarm information.

BSS (including BTS and BSC) alarm information can be managed in a centralized way through the interface as shown in Figure 1-4.

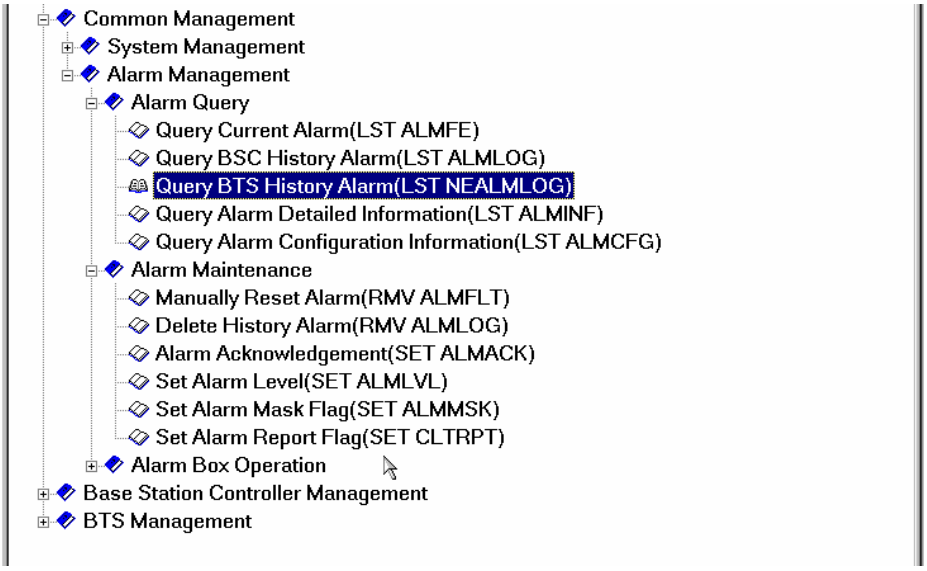

Figure 1-4 Alarm management

II. BTS networking

The BTS networking function is shown in Figure 1-5. This function is provided by only the remote maintenance console, not by the near maintenance console.

The BTS networking management provides for cBTS3612s and BTS3601Cs the management of BTS object, start information and data backup.

- The management of BTS object includes the creation, deletion, query and modification of BTS information. To create a BTS is to register a BTS and configure for it the basic maintenance information, including BTS name and maintenance IP address.
- The start information management aims at BTS BOOTP (member of TCP/IP family) information. For BAM to manage BTSs, it is necessary to establish the BAM-BTS O&M links. As the result, it is necessary to configure the information including the No. of the optical interface for the O&M links, the Virtual Path (VP)/Virtual Circuit (VC) Nos. of Asynchronous Transfer Mode (ATM) links, etc.
- The data backup management is the operations related to the backup of BTS configuration data. To send the BTS configuration data for backup, the storage path and file name should be set with this function, with the suffix of the file name as "bin". The BTS just reset will request BAM for configuration data. If the data have been backed up, BAM will retrieve them and send them directly to the BTS rather than configure them again.

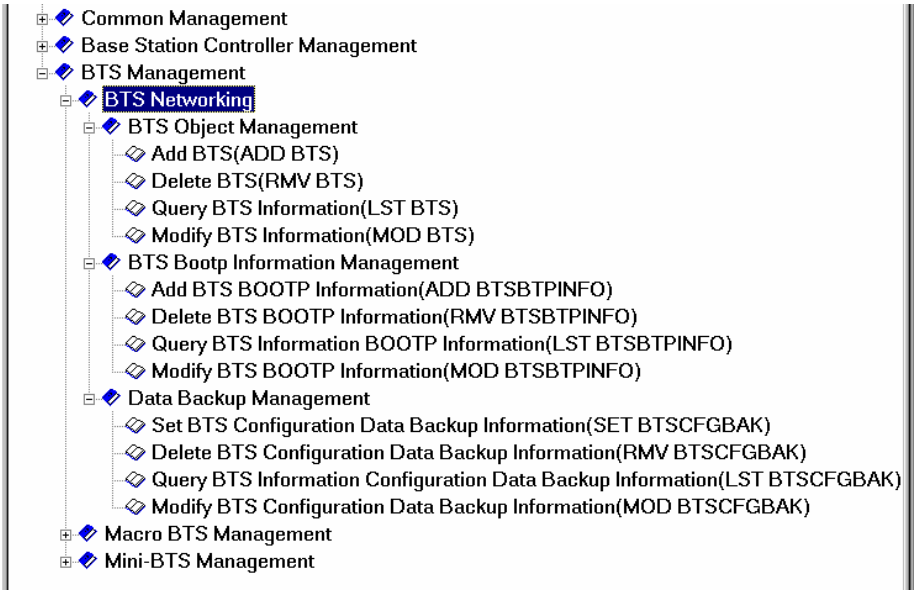

Figure 1-5 BTS networking

III. Micro-BTS loading management

Figure 1-6 shows the BTS loading management function. This function is provided only by the remote maintenance console, not by the near one.

The micro-BTS loading management involves the various operations over the software loading information, as well as the up/downloading of configuration data, and the downloading/activation of the software. Please note that the target path for uploading and source path for the downloading are those set in the "Data Backup Management" of "BTS Networking".

The purpose of adding BTS software loading information is to ensure that the software loaded to BTS boards from the specified path in BAM is of the correct version.

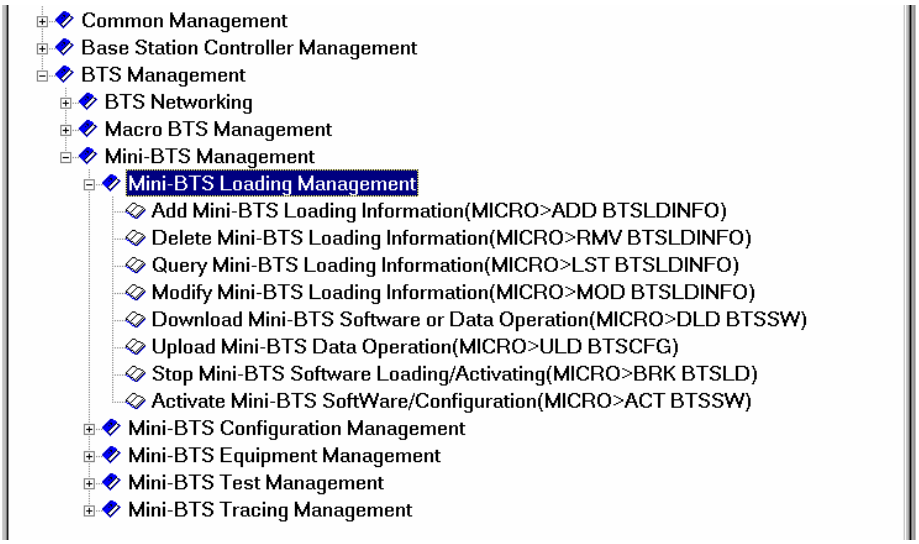

Figure 1-6 Micro-BTS loading management

IV. Micro-BTS configuration management

Figure 1-7 shows the micro-BTS configuration management function.

The functions that the configuration commands of the near maintenance console can realize are almost the same as these functions. The BTS configuration is usually realized at the remote maintenance console.

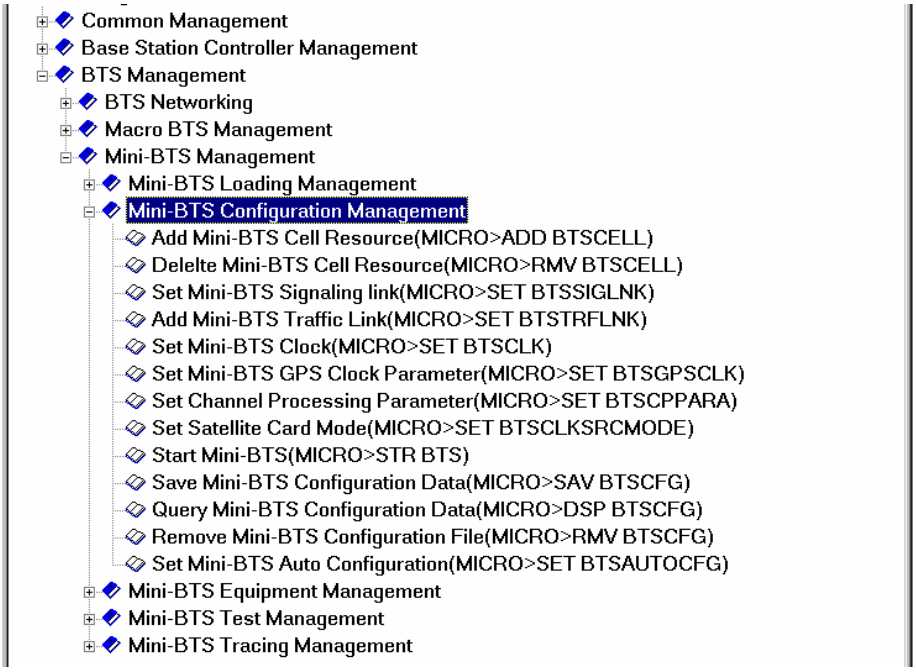

Figure 1-7 Micro-BTS configuration management

V. Micro-BTS equipment management

Figure 1-8 shows the micro-BTS equipment management function.

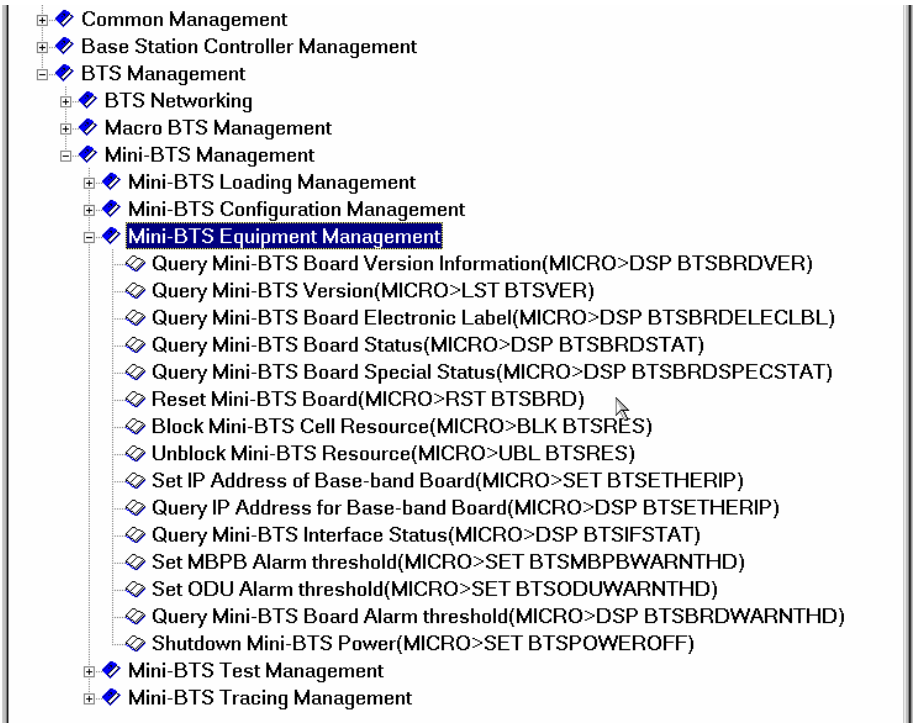

Figure 1-8 Micro-BTS equipment management

VI. BTS Test Management:

Figure 1-9 shows the micro-BTS test management function.

VII. Micro-BTS tracing management

Figure 1-9shows the micro-BTS tracing management functions.

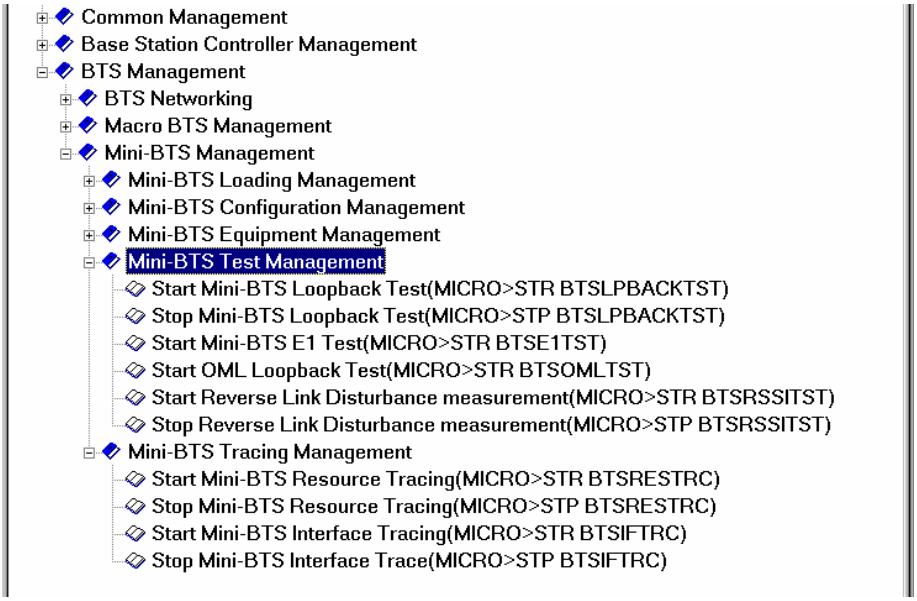

Figure 1-9 Micro-BTS test management & tracing management

Chapter 2 Maintenance Console Introduction

2.1 Near Maintenance Console

2.1.1 Startup of the Console

The near maintenance console serves to maintain the BTS. To start the maintenance console and use it to maintain the BTS, one should:

1) Connect the maintenance console through straight through cable to the BTS via the Ethernet interface in the maintenance window of Micro-bts Base-band Processing Module (MBPM);
2) Power on the maintenance console, run Telnet.exe, and log in to the BTS with the designated user name and password;
3) Input command lines based on MML to conduct O&M for the BTS.

Note:

BTS3601C supports two kinds of users: system and guest. Users of the system level can execute all commands, while those of the guest level can execute only part of the commands. For details, please refer to Appendix Near Command Index.

The default user name and password is usually set as:

User name: system; password: system. User name: guest; password: guest.

2.1.2 Use of the Console

For the O&M operations are conducted with the command lines based on MML. This section describes the use of MML commands.

I. Command Syntax

Each BTS3601C MML command is made up of the keyword part and the parameter part.

The keyword part may comprise one or more key words, which are strings that begin with letters and consist of both letters and numbers. Each MML command is uniquely identified by its keyword part.

The parameter parts of different MML commands also differ. The number of parameters and their values in the parameter part are different for various MML commands.

The format of a command is:

Command name: Parameter 1 = Value 1, Parameter 2 = Value 2, Parameter 3 = Value 3...Parameter n = Value n.

The keywords in a command should be separated by an underline or a space. There should be a colon between the command name and the parameters, and comma between any two parameters. The two symbols below are also used to describe the parameters:

—— <>

—— [ ]

The indications of the symbols are illustrated in Table 2-1 with examples:

Table 2-1 Format of MML command parameters

Symbol	Meaning	Example
< >	Enclosed is the value of the parameter specified ahead of the '='.	SET BTSCLK CLKSRC0=<value>,[CLKSRC1=<value>],[CLKSRC2=<value>] This command involves 3 parameters, The first one is mandatory, and the later two are optional. <value> is the parameter value that should be input.
[ ]	Enclosed is the optional or default parameter.	

II. Input of Commands

To input MML commands, please note that:

- MML commands are NOT case-sensitive
- The punctuation used in a command should be in DBC case.
- If there is no need to specify some of the optional parameters or parameters with default values, skip them.
- Maximum input of one MML command: 512 characters.
- Functional keys as listed in Table 2-2 are supported.

Table 2-2 Functional keys supported in the input of MML commands

Key	Function
Letter key, number key, underline, colon, comma, equal mark and semicolon	Within the length limit of a command, the input of letters, numbers and other symbols listed here are supported.
Enter	Execute the input command.
BACKSPACE	Delete the current character.
ARROW LEFT	Move the cursor to the next character on the left.
ARROW RIGHT	Move the cursor to the next character on the right.

Key	Function
ARROW UP	Move the cursor to the previous command or the upper line.
ARROW Down	Move the cursor to the next command.

III. Command Line Online Help

To obtain online help concerning MML commands:

In MML interface, input command **HELP** to obtain the simple description of the online help system. To obtain detailed help information on a particular command, input **HELP** and the related parameters. Example:

HELP: CMDNAME="ADD BTSCELL"

With this command, the detailed help information of the command **ADD BTSCELL** can be obtained.

2.2 Remote Maintenance Console

2.2.1 Startup of the Console

The precondition for the startup of the console is that the remote maintenance system has been installed, and is in normal communication with BSC.

I. Run the maintenance console software

Select [Start/Program/Airbridge cBSS cdma 1X Administration System /Airbridge cBSS Maintenance] to enter the Service Maintenance System.

Set up the connection with BAM, for details, please see the online help.

2.2.2 Use of the Console

The remote maintenance console is different from the near maintenance console in that the former is used for the routine maintenance of the BTS, while the later one is for BTS on-site maintenance.

The configuration and maintenance functions of the BTS (except the networking function and loading management function, which can be realized only at the remote console), can either be realized at the remote or the near maintenance console. It is recommended to configure the BTS at the remote console.

For the specific operations concerning the use of the remote maintenance console, please refer to the online help or the operation manual of BSC equipment.

Chapter 3 Routine Maintenance Instructions

3.1 Overview

BTS3601C Routine Maintenance Instructions describes in details the contents and methods of BTS3601C routine maintenance operations. It serves as a reference in determining the routine maintenance schedule of a particular site.

3.1.1 Purposes of Routine Maintenance

Normal system operation of BTS3601C in different running environment depends on effective routine maintenance. BTS3601C routine maintenance is intended to detect and solve problems in due time to prevent trouble.

3.1.2 Classification of Routine Maintenance Operations

I. Classification by implementing methods

Conventional maintenance

This method is applied on regular basis to observe the operation of the system, test and analyze equipment performance.

Unconventional maintenance

The unconventional method is to test whether the system performance has degraded by artificially creating some faults. For example, maintenance engineers may artificially create some faults and test if the alarm system reports alarm correctly.

II. Classification by period length

Unscheduled maintenance

This includes the maintenance operations performed at equipment fault or network adjustment. For example, maintenance tasks performed due to by user complaint, damage of equipment and line fault. Solving of problems left over by daily maintenance operations is also regarded as unscheduled maintenance operation.

Daily maintenance

It refers to the maintenance tasks conducted each day. BTS3601C daily maintenance helps maintenance engineers keep track of the operating conditions of the equipment

at any moment so that problems can be solved in time. When a problem is detected in daily maintenance, record it in detail to help eliminate it in time.

Periodical maintenance

Periodical maintenance refers to the maintenance tasks conducted regularly. Periodical maintenance helps maintenance engineers keep track of the long-term performance of the equipment.

Periodical maintenance includes: monthly maintenance, quarterly maintenance and yearly maintenance.

3.1.3 Usage of Routine Maintenance Records

As a maintenance engineer, you are required to fill in the following tables when you conduct the daily, monthly, quarterly and yearly maintenance for your BTS3601C. And specific instructions have been given after those tables.

I. Daily unexpected fault handling record

Note down in details the unexpected faults occurred in BTS3601C daily maintenance operations in the table for future reference. The user may modify the record according to the actual needs, or compile the records into manuals.

II. Monthly maintenance record

Note down in details the actual maintenance operations carried out during BTS3601C monthly maintenance in the table. For details, see BTS3601C Monthly Maintenance Operation Instruction.

III. Quarterly maintenance record

Note down in details the actual maintenance operations carried out during BTS3601C quarterly maintenance in the table. For details, see BTS3601C Quarterly Maintenance Operation Instruction.

IV. Yearly maintenance record

Note down in details the actual maintenance operations carried out during BTS3601C yearly maintenance in the table. For details, see BTS3601C Yearly Maintenance Operation Instruction.

Daily Unexpected Fault Handling Record

Site		**Belong-to BSC**	
Time when fault occurred:		Time when fault is solved:	
Person on duty:		Handled by:	

Classification of fault:

☐ Micro-bts Ac-dc Power supply Module (MAPM)
☐ Micro-bts Radio Frequency Front End Module (MFEM)
☐ Antenna and feeder system
☐ Micro-bts Transceiver Module (MTRM)
☐ Micro-bts Power Amplifier Module (MPAM)
☐ Others

Fault detected:

With user complaint From the alarm system
In Daily maintenance From other sources

Description of fault:

Fault handling & result:

Monthly Maintenance Record

Site: _____

Time of maintenance:____(MM)_____(DD)_____(YY) ____(MM)____(DD)____(YY)	Maintainer:		
Items	**Status**	**Remarks**	**Maintenance engineers**
Environment	☐Normal, ☐Abnormal		
Temperature	☐Normal, ☐Abnormal		
Humidity	☐Normal, ☐Abnormal		
Indoor air-conditioner	☐Normal, ☐Abnormal	Upon indoor installation	
Call test	☐Normal, ☐Abnormal		
Battery group	☐Normal, ☐Abnormal	When a battery group is used	
Grounding, lightening protection and power supply system	☐Normal, ☐Abnormal		
RF antenna and feeder part	☐Normal, ☐Abnormal		
Power supply module	☐Normal, ☐Abnormal		

Description of fault and handling measures taken	
Problems remained	
Shift leader check	

Caution:

Avoid short circuit upon battery check!

Quarterly Maintenance Record

Site: _____

Time of maintenance:____(MM)_____(DD)____(YY) ____(MM)____(DD)____(YY)	Maintainer:		
Items	**Status**	**Remarks**	**Maintenance engineers**
Power supply	☐Normal, ☐Abnormal		
Road test	☐Normal, ☐Abnormal		
Accessories check	☐Normal, ☐Abnormal		
Description of fault and handling measures taken			
Problems remained			
Shift leader check			

Yearly Maintenance Record

Site: _____

Time of maintenance:____(MM)_____(DD)_____(YY) ____(MM)____(DD)____(YY)	Maintainer:		
Items	**Status**	**Remarks**	**Maintenance engineers**
Call test	☐Normal, ☐Abnormal		
Cabinet sanitation	☐Normal, ☐Abnormal		
BTS power output	☐Normal, ☐Abnormal		
Grounding resistance and grounding wires	☐Normal, ☐Abnormal		
Water-proof performance of antenna and feeder connector and lightening protection grounding clip	☐Normal, ☐Abnormal		
Firmness and angle of antenna	☐Normal, ☐Abnormal		

Description of fault and handling measures taken	
Problems remained	
Shift leader check	

3.2 Monthly Maintenance Instructions

Items	Instructions	Note
Call test	Make calls with a Mobile Station (MS). Collect information at both the MS and the Base Station Controller (BSC) to see if all calls are normal for all sector carriers.	There should be no noise, no call dropping, nor cross talking.
Grounding, lightening protection systems and power supply system	1) Check the connections in the grounding system and the lightening protection system. 2) Check if the power supply system is normal. 3) Check if any part of the lightening protector is burnt.	Keep the lightening protector in good status.
Antenna and feeder part	1) Check if the support of the antenna is set to the correct direction; 2) Check if the water-proof performance of the feeder is normal.	Query at the maintenance console.
Power supply module	Check if there is any alarm on the power supply module.	

3.3 Quarterly Maintenance Instructions

Items	Instructions	Note
Check 220V AC supply	Measure whether input voltage and frequency are in the specified range.	Range of normal input voltage: Rated frequency:
Road test	Test on the handoff and coverage area of the cells with a test MS.	
Accessories check	Check the auxiliary facility box and UPS, etc.	

3.4 Yearly Maintenance Instructions

Items	Instructions	Note
Call test	Make calls with an MS. Collect information at both the MS and the BSC to see if all calls are normal for all sector carriers.	There should be no noise, no call dropping, nor cross talking.
Cabinet sanitation	Tools required: Vacuum cleaner, alcohol and towel.	Impose strict operation regulations to prevent mis- operation on the power supply system.
BTS power output	Test the transmit power of the carriers.	Check if the output is the same as designed in the BSC.
Grounding resistance and grounding wires	1) Measure the grounding resistance with proper test instruments. 2) Check for lose grounding wire connectors and their aging status	
Water-proof performance of antenna and feeder connector and lightening protection grounding clip	1) Check the external parts; 2) Unwrap them and check.	Wrap up the checked parts with the same material used before the check.
Firmness and angle of antenna	1) Tighten the bolts with the wrench. 2) Check if the angle are correctly set.	Do not apply too much torque on the bolts

Chapter 4 Fault Analysis and Locating

4.1 Fault Handling Process and Method

4.1.1 Classification of Faults

Faults can be classified into three categories according to their sources:

- Faults with BTS equipment
- Faults with data configuration
- Faults with other Network Elements (NE) like MS, BSC, or cells of other BTSs.

Generally, faults can be reported by:

- The alarm system. The alarm system will send out signal whenever it detects a fault, and recommend relevant resolution.
- MS Subscribers. Sometimes, poor service or performance is also a form of fault. For instance, poor conversation quality, MS access failure.
- Maintenance & Operation Engineer. In some case, fault might happen while loading data or sending commands.

4.1.2 General Handling Procedure

The fault handling process involves four stages: Information collection, fault judgment, fault location, and troubleshooting.

- Information collection: Collect all available original information
- Fault judgment: Specify the fault range
- Fault location: Locate the specific fault cause
- Troubleshooting: Eliminate faults and restore the system through proper measures or steps

4.1.3 Conventional Methods for Fault Judgment and Location

I. Original information analysis

The original information includes abnormal phenomenon reported by Maintenance & Operation Engineers, users or offices. It provides first-hand materials for fault judgment and analysis. Thus it helps engineers minimize the fault range and locate fault type.

II. Alarm information analysis

The alarm system of the BTS will send out signals in the form of sound, light, LED and screen output. This information, shown in the Alarm Maintenance Console, includes detailed description for fault, possible cause and recommended solution. The faults identified by alarm system range from hardware, link and trunk to CPU load. Hence, the alarm system is a very useful tool for engineers to locate and solve faults.

Alarm information analysis can help locate the specific location and cause of the fault. The rich and complete alarm information from the BSS alarm console can be used to locate a fault directly or in cooperation with other methods. It is the major method for fault analyzing.

III. Indicator status analysis

On the maintenance window of BTS modules, there are indicators to reflect statuses of boards, circuits, links and nodes. Hints given by indicators often help engineer to locate faults quickly. Generally, this method is applied together with alarm information.

IV. MS dialing test

In most cases, BTS functions affect the quality of voice and data services. It is a straightforward method to verify calling function and BTS modules via MS dialing test. This method is frequently used to verify signaling system, voice and data transmission.

V. Instruments and meters

It is a conventional technical method for BTS fault handling to analyze fault through instrument and meters. Instruments and meters can provide visualized and quantized data to directly reflect the fault nature. This method is widely applied in signaling analysis, wave shape analysis, BER detection and feeder fault detection

VI. Traffic measurement

Call completion rate, a key indicator for measuring capability of telecom operators, directly relates to profits of operators and their customer satisfaction. Therefore, it is critically important for operators to increase call completion rate and minimize call loss.

Traffic measurement is a powerful tool to enhance call completion rate by detecting cause for call loss. Faults with BTS are also direct causes that affect call completion rate.

VII. Interface tracing

The BSS O&M system can trace messages of Abis interface, OML interface, Um interface and A interface on the real-time basis.

This function provides a very efficient approach for identifying faults occurred in call connection or BTS-BSC signaling interworking. Given this information, engineers can easily locate root cause and figure out follow-up actions.

VIII. Loopback test

Loopback test is a common approach to verify normal functioning of transmission equipment and trunk parameter setting. Loopback test is a kind of self-sending and self-receiving method. By performing this test, engineers are able to check transmission equipment, channel, service status, and signaling interworking.

Two loopback modes are available: Software loopback and hardware loopback. The former is easier to perform and more flexible but less reliable than the latter.

Conventional loopback tests are E1 loopback test and optical fiber loopback test.

Note:

When E1 outloop test is activated on the BSC side, the time parameter is mandatory. Otherwise the BTS will be kept in the disconnected status all the time unless the BTS is reset on the site.

IX. Contrast/Conversion

In the contrast mode, the user can compare the faulty part or phenomenon with the normal part or phenomenon so as to detect the dissimilarity and locate the fault. This method can be used in simple fault cases.

After spare parts are used, the fault range or location still cannot be specified. In this case, the user can interchange the normal parts like boards or fiber with the possible faulty parts, and then detect the change on operation status. In this way, the fault range or fault location can be detected. This method can be used in cases with complex fault ranges.

Note:

Interchanging is a risky operation. For example: A board in short-circuit status, if interchanged to a normal subrack, may damage the normal subrack. Therefore, the use of this method is requires great care. Do not use it unless you are sure that it will not cause new faults

---

X. Getting help on Huawei technical support website

Users can login Huawei technical support website support@huawei.com for help. This website collects a large number of cases for all product lines, and shares our experience in specific fault location and solving.

Registration is needed before you can use this information. After login with your user name and password, you can search the information of your interest. For example, input [Maintenance experience], [Mobile Telecommunication] and [CDMA] to search the related fault cases.

In addition, you can enter the [Technical Forum] of support@huawei.com to search related problems or post your questions for solution.

XI. Contacting Huawei local office

If you cannot locate or solve the fault, you can contact Huawei local office or contact Huawei headquarters.

Within the warranty period, Huawei provides the following services: Telephone consultation, telephone instruction, remote dial-up diagnosis, on-the-site support, hardware maintenance, complaint handling, on-the-site training and regional manager service.

Contact information of Huawei Customer Service Center

Hotline: 86-755-28560000 8008302118

Fax: 86-755-28560111

E-mail: support@huawei.com

E-mail of technical support network administrator: supportmaster@huawei.com

4.2 Typical Case Analysis

This section shares with you some typical cases our customer met, together with relevant resolution, in their maintenance and operation process. It is expected to give you some hint in solving the problem you encounter. Cases are presented hereinafter:

4.2.1 Transmission Equipment Fault

I. Fault Description

"E1 Link Local Alarm" or "E1 Link Remote Alarm" is triggered on the BTS side.

II. Troubleshooting

Fault cause	Fault location	Handling methods	Remarks
The physical link is faulty on the BSC side	Check whether the corresponding CIXE is in the normal status and whether the E1 cable is properly plugged.	1. Check cables on the BSC side and properly connect the E1 cable with BSC. 2. Loopback the corresponding E1 port in DDF toward BSC in the equipment room. If the CXIE board of BSC is normal, there should be no fault with the physical link on the BSC side.	
The physical link is faulty on the BTS side	Transmission cables are not properly plugged in the BTS.	1. Check the physical transmission cables and properly connect the E1 cable with BTS. 2. Loopback the corresponding E1 cable in DDF toward BTS in the equipment room. If E1 is tested to be normal via the remote loopback test activated by BTS, there should be no fault with the physical link on the BTS side.	
Transmission system fault	Check the BER of the corresponding E1 trunk. If the BER is greater than the specified value, transmission problems may exist.	Contact Huawei local office to solve the problems in the transmission system.	Check BER in the following steps: Execute the command for E1 outloop test on the maintenance console of BSC, and measure the BER of the corresponding E1 with BER tester on the MSC side.

4.2.2 OML Fault

I. Fault Description

After BTS is powered on,

- the BOOTP process fails, or
- the attempt to establish OML signaling link to OMC fails, or
- the OML link breaks while the BTS is running.

The “OML Fault" alarm can be viewed from the BTS maintenance console.

II. Troubleshooting

Fault cause	Fault location	Handling methods	Remarks
Physical link problems on the BSC side		Please refer to "4.2.1 Transmission Equipment Fault"	
Equipment fault on BSC side	Remote OMC fault	1. BAM is abnormal or the BAM process is not activated. Restart the BAM process in this case. 2 If the loading process of BAM appears abnormal, restart the loading process. 3 The lower-layer communication process of BAM is abnormal – Restart the communication process in this case.	The remote OMC serves as BOOTP Server and OML Server during OML establishment. Therefore, any fault with the remote OMC will result in OML fault.

Fault cause	Fault location	Handling methods	Remarks
Physical link problems on the BTS side	1. Transmission cables are not properly plugged in the BTS. 2. The communication link of the board is faulty.	1. Please refer to "4.2.1 Transmission Equipment Fault" 2. Check MBPM and MTRM modules.	After completing initialization, MTRM will send request for configuration to OMU of MBPM. Then the module runs normally after receiving configuration data. In case that ALM and ACT indicators flash at 4 Hz, link between MTRM and OMU is faulty.
Data configuration problems on the BSC side	1. UNI link is abnormal. 2. BOOTP ID of CMUX of BM sub rack is wrong. 3. BSC route information is wrong. 4. OMC configuration data is wrong.	1. Query board-specific status to get the UNI link status 2. Check BSC configuration data to ensure data integrity and uniqueness. 3. Check BSC-related route information. 1) Check BAM route information to ensure proper connection among MCU boards. 2) Check CMUX route information to ensure its connection with BTS and BAM. 4. Check BTS BOOTP information to ensure consistency with BSC side.	1. If the physical layer of OML is implemented via E1, it should be configured in the UNI mode. If the UNI link status is incorrect, OML will become faulty. 2. BOOTUP request shall succeed before OML setup. MAC field must be unique within BOOTUP request package. In case there are duplicated MAC in CMUX BOOTUP request package, OML cannot be set up successfully. 3. BTS OML connects IP gateways at CMPU and CMUX sides of BSC. Route information for both sides shall be different. Incorrect configuration for gateways will cause OML setup failure. 4. OMC is BOOTP and OML Servers for OML link setup. In BTS BOOTP, OMC needs configuring local BOOTP to ensure its uniqueness and consistency with BSC side. If incorrect data is configured for OMC, the MAC in BOOTP request package from BTS will not match BOOTP information. In this case, OML setup may fail for failure of BOOTP request.
Transmission system fault		Please refer to "4.2.1 Transmission Equipment Fault"	

4.2.3 Abis Signaling Link Fault

I. Fault Description

After BTS startup, the Abis signaling link between BTS and BSC cannot be established, or the established link breaks during BTS operation.

"Abis Signaling Link Fault" alarms can be viewed from the maintenance console of the BTS.

II. Troubleshooting

Fault cause	Fault location	Handling methods	Remarks
Physical link problems on the BSC side		Please refer to "4.2.1 Transmission Equipment Fault".	
Equipment fault on BSC side	When BSC is faulty, the BTS will also generate an "Abis Signaling Link Fault" alarm.	Please refer to the maintenance manual of BSC.	
Data configuration problems on the network side	1. UNI link status is abnormal. 2. The configuration parameters of Abis signaling link are incorrect	1. Please refer to "4.2.2 OML Fault". 2. If the UNI status is normal and the configuration data is available in BTS, check whether the Abis signaling link configuration is correct.	The following parameters should be configured for Abis signaling link in the IPOA mode: PVC parameters (VPI and VCI), TCP/IP address (IP address, subnet mask and TCP port No.) Make sure that the PVC used by Abis signaling link is different from that used for Abis service.
Physical link problems on the BTS side		Please refer to "4.2.1 Transmission Equipment Fault".	
Transmission system fault		Please refer to "4.2.1 Transmission Equipment Fault".	

4.2.4 Coverage Fault

Coverage faults are caused most possibly by faults with the antenna & feeder system. Other system may also affect the coverage. Therefore, the following description should be regarded only as reference used to handle antenna & feeder system faults.

If the antenna & feeder system is faulty, the faults should be handled step by step:

Measure the VSWR from the BTS3601C antenna port to each section of cable. If the VSWR of a section is greater than 1.5, either the cable or the connectors must be faulty. If the VSWR exceeds the limit, shake the cable to check whether the connectors are loose. Any loose connector means poor contact. Detect the cable in poor contact, and then tighten the cable connectors and cable.

I. Insufficient Coverage Scope

1) Fault Description

The downlink coverage scope is reduced.

2) Troubleshooting

Fault cause	Fault location	Handling methods	Remarks
Fault with antenna & feeder (including antenna and feeder)	Measure the VSWR of the antenna & feeder with sitemaster and check whether it is normal (It should be less than 1.5)	If the VSWR is much greater than the rated value, please conduct further tests so as to locate the faulty section in the antenna & feeder (or antenna), and then make the required rectification or replacement.	Normally, the VSWR of the antenna & feeder should be smaller than 1.5. In practice, poor connection should be suspected upon a VSWR greater than 1.3.
Power output of MFEM is abnormal	1. Test the downlink power output at the export of BFEM. If a great difference exists between the result and the nominal power value, the RF downlink channel of the BTS is faulty. 2. Start the BTS and measure the power output directly at the output terminal of MPAM. If the power is normal, the transmission tributary of MFEM is faulty. 3. If the output power measured at MPAM output terminal is abnormal, measure the power output at the output port of MTRM. If the result is normal, MPAM may be faulty; otherwise MTRM is faulty.	If MTRM, MFEM or MPAM is found damaged, replace it.	

II. Signal Fluctuation

1) Fault Description

The signals received by MS fluctuate too much.

2) Troubleshooting

Fault cause	Fault location	Handling methods	Remarks
Power output of BTRM is abnormal	1. Check the power output with power meter at MFEM. If the output power is unstable, output problems exist with either MPAM or MTRM. 2. Check the power output of MTRM. If the power if stable, MPAM must be faulty; otherwise MTRM must be faulty.	Replace faulty modules.	
External interference	None	Remove the interference source	

4.2.5 Service Fault

BTS3601C can support voice and data services. The BTS serves as access equipment, functioning as RF channel. In the case of fault like service interruption, please first remove such faults as transmission interruption and BTS power failure, and then locate other faults as per the following procedures:

I. Fault in MS Access to Network

What is MS access to the network?

When a MS is powered on, it first enters the System Determination Substate. In this substate, MS can decide whether to select the analog system or the CDMA system based on parameters preset by the subscriber. If the CDMA system is selected, the MS will attempt to acquire the CDMA system at the basic frequency or the auxiliary frequency and enter Pilot Channel Acquisition Substate.

In this substate, the MS will first search all pilots (search all PN offsets), and then find the select the strongest pilot and acquire it. Once the pilot is acquired, MS will enter the Sync Channel Acquisition Substate.

In this substate, the MS will attempt to get the synchronization channel and receive synchronization messages, through which the MS can get such information as pilot's PN offset, NI, long code status, system time, paging channel rate and the frequency of the basic paging channel. Then it will enter the Timing Change Substate.

In this substate, the MS will synchronize long code status and system timing with CDMA system timing based on the information received from the synchronization channel messages, including pilot PN offset, long code status and system time. Then it will enter the idle state.

In this idle status, the MS should receive the overhead message from the paging channel. The MS cannot work normally unless it receives the overhead message within the specified duration.

Once all the above requirements are met, the MS can access to the network.

1) Fault Description

The MS is unable to acquire the CDMA network just after startup.

2) Troubleshooting

First make sure the MS parameters (such as basic frequency, auxiliary frequency, SID and NID etc.) have been correctly configured, and then go through the following procedures step by step to locate and eliminate faults:

Fault cause	Fault location	Handling methods	Remarks
Cell is not started	1. The BTS is not started due to BTS equipment fault. 2. The BTS is not started due to lack of correct BTS data.	Please refer to "4.5.2 BTS Initialization Failure" for fault elimination measures.	

Fault cause	Fault location	Handling methods	Remarks
Abis signaling link fault	-Query the current alarms of BTS on the OMC console or BTS local maintenance console and check whether any "Abis Signaling Link Fault" alarm.	-Please refer to "4.5.3 Abis Signaling Link Fault" for fault elimination measures.	1. After BTS startup, if the Abis signaling link becomes faulty, BSC will be unable to perform logic configuration for BTS, which will result in MS network access failure. 2 If the BTS has obtained correct logic configuration, it will switch off transmission signals of BTRM corresponding to all sector carriers. This will result in the failure of MS access to the network.
The Cell has not obtained the BSC logical configuration	-1. Check the configuration progress report in the configuration process via the [BTS Status] window on the OMC console: If no progress reports are available such as "Common channel established successfully" and "Overhead message updated successfully", the logic configuration for this cell has not been completed. -2. Check the configuration process report of the cell in the [BTS Status] window from the OMC console: If a process report "Cell deleted" is prompted, the cell must have been deleted.	If the cell has not obtained the logic configuration, please check the following items by viewing relevant indicators, querying board status and alarm information, etc. Check status of: 1. The MTRM for this cell; 2 The MBPM for this cell; 3.The Abis signaling link; 4.The BSC; 5. Configuration data for BTS and BSC and make sure their consistency.	1 If the cell has not obtained the logic configuration (Namely, no pilot channel, synchronization channel and paging channel are established in the cell), or the overhead message has not been updated, the MS access to the network will be impossible. 2. Sometimes the cell may be deleted due to lack of physical equipment or due to mis-operations (such as deleting a device by mistake), and the MS cannot be accessed to the network.
This cell is blocked.	The logic configuration for the cell has been completed, but the MS still cannot access to the network. Please check whether this cell has been blocked. Execute the command **micro>dsp btsbrdstat** to query the status of MTRM and check whether MTRM is blocked.	If the cell is blocked, the MS access to the network will be impossible until the subscriber unblocks the cell.	When a cell is blocked, the BTS will switch off the transmission signals of the BTRM corresponding to the carrier of this cell, which will result in the MS network access failure.
Abnormal receiving channel	1. The logic configuration for the cell has been completed, but the MS still cannot log on to the network. Please check whether the receiving channel is working normally. 2. Track air interface messages with a CDMA test MS: If the MS cannot receive any response from the BTS after sending a registration message, the inverse receiving channel of the BTS must be faulty.	By viewing relevant indicators, querying board status and alarm information, 1. Confirm proper installation of MFEM and MTRM, e.g. inter-module cable connection, water-proof measures. 2. Check connection of antenna & feeder. 3. Check BTRM status. 4. Check BTS physical configuration data, e.g., cell parameters and inverse search parameters.	1. If the receiving channel of the BTS is abnormal, the BER may become too high and the MS may be detached frequently. 2. When the MS is powered on, it will send a power-on registration message to the system. The BTS cannot receive this message due to faults with the receiving channel, so it will send any response to the MS, which causes MS registration failure. 3. After the registration fails, the MS will enter the system determination substate to re-acquire the system. Once the system is acquired, the power-on registration will be activated again. This process is repeated again and again but the MS cannot access to the network.

Fault cause	Fault location	Handling methods	Remarks
Abnormal transmitting channel	The logic configuration for the cell has been completed, but the MS still cannot access to the network. Please check whether the transmitting channel is working normally.	By viewing relevant indicators, querying board status and alarm information, 1. Confirm proper installation of MFEM, MPAM and MTRM, e.g. inter-module cable connection, water-proof measures. 2. Check MTRM transmission activator status. 3. Check BPAM status. 4. Make sure proper connection among MFEM, feeder, antenna and relevant jumpers. 5. Check antenna installation. 6. Check for any standing wave ratio alarm.	MTRM, MPAM and MFEM form a transmission channel with the antenna & feeder. Any abnormality with the transmission channel will cause signal output failure or abnormal signal output.
Incorrect cell gain and common channel gain	-The logic configuration for the cell has been completed, but the MS still cannot connect to the network. Please check whether the gain parameters are correctly set upon cell configuration.	Through Abis-interface message tracking tool, find out whether the gain parameters carried in the Abis-Cell Setup message are correct, if incorrect, reconfigure the BSC Data Configuration Table.	During logic configuration of the cell, it is necessary to configure such parameters as sector gain, carrier gain, pilot channel gain, sync channel gain and paging channel gain, etc. If these parameters are not properly set (for example: they are set too low), the MS cannot capture the common channel and thus cannot access to the network.
Incorrect overhead message	The logic configuration for the cell has been completed, but the MS still cannot log on to the network. Please check whether the overhead messages are correct	Through the air interface message signaling analyzer, check whether the MS has received all overhead messages configured by the system. Check additionally whether the parameters of overhead messages are correct. If incorrect, modify the data configuration table of BSC to update the overhead messages.	Entering idle status, MS shall receive all system overhead message, including Synchronization message, access parameter message, system parameter message, CDMA channel list message and neighbor cell list message. Other overhead messages may vary according to the network parameter settings. If any of the above overhead messages is missing, the MS cannot access to the network. Additionally, the value setting of each message parameter also directly affects the MS access to the network. Therefore the parameter values should also be considered.
Improper MS location		Move the MS to a place without any obstacle.	
Insufficient power for MS	Check the power volume of the MS	Charge the battery or replace a full-duty battery.	

II. Data Service Unavailable

1) Fault Description

Data services cannot be applied normally.

2) Troubleshooting

Fault cause	Fault location	Handling methods	Remarks
Incorrect data configuration	Track the messages of Abis interface and Um interface and check whether the transmission data configuration is correct.	Configure correct data.	
Equipment fault	Eliminate faults with other equipment, such as PCF, BSC or other network equipment.	Eliminate them one by one.	
GPS out of synchronization	In the case of data service, if many NAK frames are shown in FMR, the FER of the air interface must be high. This may be caused by problems with the GPS clock.	Eliminate hardware faults with the GPS antenna & feeder system.	

4.2.6 O&M Fault

I. Software Loading Fault

1) Fault Description

When BTS software loading is carried out at the remote maintenance console of the BTS, the loading process fails, but no prompt like "Software downloading succeeded!" appears on the interface. This means that the new software has not been downloaded to the BTS.

2) Troubleshooting

Fault cause	Fault location	Handling methods	Remarks
The communication is abnormal between the maintenance console and BTS	Check whether the communication between BTS and the remote maintenance console is normal.	1. Check whether OML and OMC are normal and whether the FTP service is activated. Please refer to 4.2.2 OML Fault. 2. Check whether BSC is the normal operation status. Please refer to the maintenance manual of BSC for details.	
The software type or the version No. is incorrect.	A software type error or software version No. error is prompted in the software downloading dialog box of the O&M console.	Select the right software/software type/software version No.	
The downloading process is abnormal.	A software downloading failure is prompted in the software downloading dialog box of the O&M console.	Restart the loading process.	
The data completeness of the software file is abnormal.	During the repeated loading process, a software downloading failure is prompted again in the software downloading dialog box of the O&M console.	Check whether the file data of the software file is complete.	

II. BTS Initialization Failure

BTS initialization involves two phases: Site initialization and cell initialization.

1) Fault Description

When the BTS is powered on, the system initialization fails, which leads to BTS startup failure.

In this case, the RUN indicators of some board flash fast.

2) Troubleshooting

Fault cause	Fault location	Handling methods	Remarks
BTS configuration data error	1. Check the data configuration of MBPM. 2. Check the data configuration of MTRB.	Reconfigure correct data.	
Clock Failure	Check the following items: 1. Whether the BTS clock signal is correct. 2. Whether the clock output of BBPM is normal. 3. Whether the connection between MBPM and GPS antenna is normal. 4. Whether more than 4 satellites are locked.	The fault may be caused by geographical factors. If less than 4 GPS satellites are captured, the BTS may be unable to obtain reliable clock signals. Query the special status of MBPB so as to query the clock signals of the BTS. Execute the command DSP BTSBRDSPECSTAT:BRDTP=MBPB, and then view the Clock state part in the returned result.	After OML is successfully established, BSC sends the corresponding configuration data. In this case, some BTS boards cannot start normally unless correct clock signal is available.
BSC configuration data error (The corresponding physical link is unavailable)	Check the link configuration of BSC.	Configure correct data.	To successfully initialize the BTS, an ATM link should have been successfully established between BTS MBPM and BSC CXIE, MBPM should have detected the link configuration on CXIE of the BSC, and the UNI link to the ATM link should have been established.
OML Failure	Please refer to "4.2.2 OML Fault".	Please refer to "4.2.2 OML Fault".	

Chapter 5 Part Replacement

5.1 General Replacement Procedure

The part replacement of BTS3601C involves all modules and optical fibers. All modules can be replaced almost in the common way. This replacement procedure is focused on module replacement.

5.1.1 Notes

I. Impact on service provision

Upon replacement of BTS3601C parts, please monitor the impact this replacement brings to the BTS service (including impact on the cascaded BTS).

II. Alarm query

Prior to replacement, query the alarms from the remote maintenance console and make a record. After replacement, query the alarms again and check whether the corresponding alarm is cleared and whether a recovery alarm is generated.

III. Version check

Prior to replacement, please confirm the version of the new module, and make a record. After replacement, please query the software version to check whether the version is correct

IV. Tools required

A Phillips screwdriver and a socket spanner matching M4 bolts.

V. Anti-static requirement

Modules are sensitive to electrostatic. Therefore, any operation must be in strict compliance with the procedures: Wear anti-static gloves or wrist strap and make sure the parts are properly grounded so as to avoid preventable damages to modules.

5.1.2 Module Removal

I. Remove plastic shell

Unlock the anti-burglary lock on the cabinet bottom, unscrew the two fixing bolts on the sides of the shell and then remove the shell.

II. Switch off power

Power off MAPM. To replace MAPM, please switch off the external power first.

Caution:

If a lower-level BTS is cascaded with the BTS, try to avoid impact on it when switching off the power.
When the lower-level BTS is a cascaded BTS3601C, it is connected with the transmission system via MBPM of the BTS. Therefore, when the power of the BTS is switched off, the service on the lower-level BTS will also be interrupted.
When the lower-level BTS is a cascaded ODU3601C, it is connected with MTRM of the BTS. Therefore, when the power of the BTS is switched off, the service on ODU3601C will also be interrupted.

III. Remove cable on the module bottom

Remove the water-resistant tape and the cable on the module bottom. Make sure not to damage the fiber or fiber connectors.

IV. Remove bolts on module top and those on module bottom

V. Remove the module

Remove the module along the slot, put it into an antistatic bag, and then into a damp-proof bag. Finally, put the wrapped module into a packing box with foam cushion.

MPAM is heavy due to the attached thermal tube. Upon replacement, make sure to keep the module undamaged.

5.1.3 Module Installation

I. Check module:

Prior to installation, take out the module from the packing box, remove the anti-static bag and damp-proof bag, and then check whether the module is damaged.

II. Check board nameplate

Locate the slot for the board from the nameplate.

III. Insert module

Push the module along the slot with both hands until you feel the module engage the backplane connector. Make sure that the panel and subrack surface are on the same surface.

IV. Tighten bolts on module top and those on module bottom

If the module is not inserted to the right position, the water-resistant performance might not be guaranteed.

V. Install cable on the module bottom

After cabling, please refer to the installation manual to wrap the cable up with tape. Make sure to maintain good water-resistant performance.

VI. Switch on power

Resume the power supply after replacement and check the relevant indicator (after opening the cover of the maintenance window) to judge whether the module is running normally.

If MAPM is replaced, switch on the external power first.

5.1.4 Replacement Completion

After the replacement, check the result in the following three aspects:

- Check whether the relevant indicator status is normal. Please refer to Appendix A Module Maintenance Window Introduction.
- Check from OMC whether the corresponding alarm has disappeared and whether any recovery alarm has been generated at the same time.
- Dial a MS on the site to check whether the BTS is working normally.

5.2 Part Replacement

5.2.1 Module Replacement

This section contains the items for special attention during module replacement based on the Section 5.1 General Replacement Procedure.

I. Replace MAPM

Prior to replacement, switch off the 220V AC power supply.

If batteries are installed on the +24V battery interface of MAPM, disconnect the batteries (Make sure to avoid short circuit) and avoid short circuit to the power supply.

II. Replace MBPM

After MBPM is replaced, query its version from the local maintenance console or OMC to check whether the version is correct.

III. Replace MTRM

After MTRM is replaced, query its version from the local maintenance console or OMC to check whether the version is correct.

IV. Replace MFEM

MFEM is connected with MTRM, MPAM and the antenna & feeder system through RF cable. After replacement, make sure to resume the connections, otherwise the RF index will be affected.

V. Replace MPAM

MPAM is heavy due to the attached thermal tube. Upon replacement, make sure to keep the module undamaged.

5.2.2 Optical Fiber Replacement

I. Check optical fiber:

Prior to replacement, carefully check the new fiber to ensure normal optical transmission.

Make clear marks for fiber correspondence to avoid any mis-operation.

Note:

The MBPM module of BTS3601C has two external optical interfaces. One is used for connection with MTRM. The other optical interface is a 4-core connector. One pair of cores is used to access the transmission system and to connect BSC (when STM-1 interface is used for the transmission system). The other pair of cores is used for connection with another BTS3601C (When optical fiber chain networking mode is adopted for BTS3601C).

MTRM has two external optical interfaces: One used for connection with MBPM and the other for cascading with ODU3601C.

II. Plug & unplug fiber connector

This operation should be conducted very carefully. Make sure to avoid breaking the cores inside the fiber connector.

Before plugging, align the fiber connector (of MTRM) with the fiber interface and align its spacing arm with the fixing slot of the interface. Then carefully plug the connector into the fiber interface until you feel the connector well engage the interface. This indicates that the connector has been plugged in position. Then turn the spacing arm into the corresponding fixing slot and tighten the nut. Now the fiber connector is installed.

Prior to fiber replacement, make clear marks for fiber correspondence so that the new fibers can be plugged right.

III. Excessive optical fibers

Put the excessive optical fibers into bellow and store same in the specified place.

Appendix A Module Maintenance Window Introduction

For the water-proof purpose, each module maintenance window is installed with a seal cover. Indicators and interfaces inside are invisible unless this cover is opened.

A.1 MBPM

I. Indicators in maintenance window

MBPM consists of MBPM and MASU. Two board indicators are visible from the module maintenance window, as described in Table A-1 and Table A-2.

Table A-1 Indicators in MBPM maintenance window

Indicator	Color	Meaning	Description	Normal status
RUN	Green	Status indicator	Fast flash (at 4Hz): MBPM is not started or software downloading is in progress. Slow flash (at 0.5Hz): MBPM is working normally. Other: The board is faulty.	Slow flash (at 0.5Hz)
ALM	Red	Alarm indicator	Fast flash (at 4Hz): Critical alarm Slow flash (at 0.5Hz): Major alarm Slow flash (at 0.25Hz): Minor alarm OFF: No alarm	OFF
ACT	Green	Operation indicator	On: Normal Fast flash (at 4Hz): OML is disconnected. Slow flash (at 0.5Hz): Abis link is disconnected. Slow flash (at 0.25Hz): Insufficient satellites are tracked.	ON

Table A-2 Indicators in MBPM maintenance window (Indicators on MASU)

Indicator	Operation status of BIOS	Indicator status	Flash interval (s)	Flash duration (s)	System status
ASU_RUN	BIOS is powered on and in operation (without host software)	OFF	Not flash	5	Initializing hardware and operating system
		Yellow	Not flash	5	Loading programmable devices
		Green	Not flash	7	Initializing BIOS
		Green flash	0.5	Long	BIOS operating
ASU_RUN	BIOS is powered on and in operation (with host software)	OFF	Not flash	5	Initializing hardware and operating system
		Yellow	Not flash	5	Loading programmable devices
		Green	Not flash	7	Initializing BIOS
		Yellow flash	0.5	13	Loading host software
		Green flash	0.1	38	Initializing host software
		Green flash	1	Long	The host software is running

Green stands for Normal, Yellow for Minor Alarm and Red for Critical Alarm

Red and green alternative flash (flash interval is 1 second) -- eastern optical fiber breakout. Eastern optical fiber means the optical fiber used to cascade BTS.

Red and yellow alternative flash (flash interval is 1 second) -- western or two direction optical fibers breakout. Western optical fiber means the optical fiber used to access the transmission system.

Caution:

In Table A-2:
"OFF" means that the indicator is off. The items to the right respectively indicate the OFF duration and the program status;
"Yellow" means that the yellow indicator stays ON all the time. The items to the right respectively indicate the ON duration and the program status;
"Green" means that the yellow indicator stays ON all the time. The items to the right respectively indicate the ON duration and the program status;
"Yellow Flash" means that the yellow indicator keeps flashing. The items to the right respectively indicate the flashing interval, flashing duration and the program status;
"Green Flash" means that the green indicator keeps flashing. The items to the right respectively indicate the flashing interval, flashing duration and the program status;
It takes about 1 minute from MASU power-on to normal operation.

II. Maintenance window interface

Table A-3 Interfaces in MBPM maintenance window

Interface	Function
PP2S	2-second signal interface for test
10M	10MHz signal interface for test
ASU_ETH/MBPB _232	MASU network port / MBPB serial port for internal test
MBPB_ETH	MBPB network port for local maintenance
RST	Reset button
S1	An 8-digit DIP switch, with its default status as OFF. It should interwork with S2.
S2	An 8-digit DIP switch, with its default status as OFF.

Table A-4 S1 DIP switch

<table>
<tr><td rowspan="8">DIP switch No.</td><td>1</td><td>OFF</td><td rowspan="2">Impedance: 120 ohm</td><td>ON</td><td rowspan="2">Impedance: 75 ohm</td><td>OFF</td><td rowspan="2">Impedance: 100 ohm</td></tr>
<tr><td>2</td><td>OFF</td><td>OFF</td><td>ON</td></tr>
<tr><td>3</td><td>OFF</td><td>Select 75 ohm for E1/T1.</td><td>ON</td><td colspan="3">Select 120 ohm for E1/T1.</td></tr>
<tr><td>4</td><td>OFF</td><td>Select E1</td><td>ON</td><td colspan="3">Select T1</td></tr>
<tr><td>5</td><td>OFF</td><td rowspan="2">The output E1/T1 is not grounded.</td><td>ON</td><td colspan="3" rowspan="2">The output E1/T1 are grounded</td></tr>
<tr><td>6</td><td>OFF</td><td>ON</td></tr>
<tr><td>7</td><td>OFF</td><td>MBPB is not powered off.</td><td>ON</td><td colspan="3">MBPB is powered off.</td></tr>
<tr><td>8</td><td>OFF</td><td>MASU is not powered off. The output E1/T1 of the module is provided by MASU.</td><td>ON</td><td colspan="3">MASU is powered off. The output E1/T1 of the module is provided by MBPB.</td></tr>
</table>

Table A-5 S2 DIP switch

<table>
<tr><td rowspan="8">DIP switch No.</td><td>1</td><td>OFF</td><td rowspan="8">Select MASU to provide output E1/T1 of MBPM.</td><td>ON</td><td rowspan="8">Select MBPB to provide output E1/T1 of MBPM.</td></tr>
<tr><td>2</td><td>OFF</td><td>ON</td></tr>
<tr><td>3</td><td>OFF</td><td>ON</td></tr>
<tr><td>4</td><td>OFF</td><td>ON</td></tr>
<tr><td>5</td><td>ON</td><td>OFF</td></tr>
<tr><td>6</td><td>ON</td><td>OFF</td></tr>
<tr><td>7</td><td>ON</td><td>OFF</td></tr>
<tr><td>8</td><td>ON</td><td>OFF</td></tr>
</table>

A.2 BTRM

I. Indicators in maintenance window

Table A-6 Indicators in MTRM maintenance window

Indicator	Color	Meaning	Description	Normal
RUN	Green	Operation indicator	Fast flash (at 4Hz): MTRM is not started or software downloading is in progress. Slow flash (at 0.5Hz): MTRM is working normally. Other: The board is faulty.	Slow flash (at 0.5Hz)

Indicator	Color	Meaning	Description	Normal
ALM	Red	Alarm indicator	Fast flash (at 4Hz): Critical alarm Slow flash (at 0.5Hz): Major alarm Slow flash (at 0.25Hz): Minor alarm OFF: No alarm	OFF
ACT	Green	Operation indicator	ON: BTRM is working normally and the clock is locked. Slow flash (at 0.25Hz): Monitor link alarm Slow flash (at 0.5Hz): The clock has not been locked or cannot be locked.	ON

II. Maintenance window interface

Table A-7 Interfaces in MTRM maintenance window

Interface	Function
10M	10MHz-signal interface
COM	Serial communication interface for internal use
RST	Reset button
TRX_ID	An 4-digit DIP switch
PP2S	2-second signal interface
TX_TEST	Test button used in forward local pilot transmission
LOAD	Jumper for internal use

Table A-8 TRX_ID DIP switch

DIP switch No.				MTRM No.
4	3	2	1	
This bit is invalid, and the default status is off	ON (0)	ON (0)	ON (0)	0
	ON (0)	ON (0)	OFF (1)	1
	ON (0)	OFF (1)	ON (0)	2
	ON (0)	OFF (1)	OFF (1)	3
	OFF (1)	ON (0)	ON (0)	4
	OFF (1)	ON (0)	OFF (1)	5
	OFF (1)	OFF (1)	ON (0)	6

Note:

The MTRM No. of BTS3601C is 0, when ODU3601Cs are cascaded, the. MTRM No. of ODU3601C of level 1 is 1, and the MTRM No. of BTS3601C of level 2 is 2, and the rest may be deduced by analogy. When ODU3601Cs are cascaded to the BTS3612, the. MTRM No. of ODU3601C of level 1 is 0, and the. MTRM No. of ODU3601C of level 2 is 1, and the rest may be deduced by analogy.

A.3 MPAM

No maintenance window is available.

A.4 MFEM

No indicators are on MFEM. Interfaces in the MFEM maintenance window are described in the following table.

Table A-9 Interfaces in MFEM maintenance window

Interface	Function
TX_TST	Used for coupling test of output power (degree of coupling: -30±1dB)
RXM_TST	Used for coupling test of main received signals
RXD_TST	Used for coupling test of diversity received signals

A.5 MAPM

Figure A-1 shows the MAPM maintenance window.

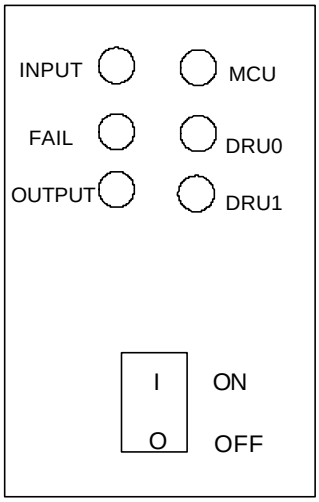

Figure A-1 MAPM maintenance window

Indicators in MAPM maintenance window are described in Table A-10.

Table A-10 Indicators in MAPM maintenance window

Indicator	Color	Meaning	Description	Normal
INPUT	Green	Power supply	ON: Normal OFF: Abnormal	ON
FAIL	Red	Module alarm	ON: Alarm OFF: Normal	OFF
OUTPUT	Green	Power supply system	ON: Normal OFF: Abnormal	ON
MCU	Green	These three indicators are reserved in BTS3601C.		
DRU0	Green			
DRU1	Green			

Appendix B Return Loss, VSWR and Reflection Coefficient

Return loss (dB)	Voltage Standing Wave Ratio (VSWR)	Reflection Coefficient Γ
4	4.41943	0.63096
5	3.56977	0.56234
6	3.00952	0.50119
7	2.61457	0.44668
8	2.32285	0.39811
9	2.09988	0.35481
10	1.92495	0.31623
11	1.78489	0.28184
12	1.6709	0.25119
13	1.57689	0.22387
14	1.49852	0.19953
15	1.43258	0.17783
16	1.37668	0.15849
17	1.32898	0.14125
18	1.28805	0.12589
19	1.25276	0.1122
20	1.22222	0.1
21	1.19569	0.08913
22	1.17257	0.07943
23	1.15238	0.07079
24	1.13469	0.0631
25	1.11917	0.05623
26	1.10553	0.05012
27	1.09351	0.04467
28	1.08292	0.03981
29	1.07357	0.03548
30	1.06531	0.03162
31	1.058	0.02818
32	1.05153	0.02512
33	1.0458	0.02239
34	1.04072	0.01995
35	1.03621	0.01778
36	1.03221	0.01585
37	1.02866	0.01413
38	1.0255	0.01259
39	1.0227	0.01122
40	1.0202	0.01
41	1.01799	0.00891
42	1.01601	0.00794
43	1.01426	0.00708
44	1.0127	0.00631
45	1.01131	0.00562
46	1.01007	0.00501
47	1.00897	0.00447
48	1.00799	0.00398
49	1.00712	0.00355
50	1.00634	0.00316

The calculation formulas for reflection coefficient Γ, Return Loss (RL), and VSWR are listed in the following table:

Reflection Coefficient G	**VSWR**	**Return loss(dB)**
$\Gamma = \frac{Ureflected}{Uforward}$	$VSWR = \frac{Uforward + Ureflected}{Uforward - Ureflected}$	$RL = 20\lg \frac{Uforward}{Ureflected}$
$\Gamma = \frac{1}{alg\left(\frac{RL}{20}\right)}$	$VSWR = \frac{1+\Gamma}{1-\Gamma}$	$RL = 20\lg \frac{1}{\Gamma}$
$\Gamma = \frac{VSWR-1}{VSWR+1}$	$VSWR = \frac{alg\left(\frac{RL}{20}\right)+1}{alg\left(\frac{RL}{20}\right)-1}$	$RL = 20\lg \frac{VSWR+1}{VSWR-1}$

Uforward stands for forward voltage while *Ureflected* stands for reflected voltage.

Appendix C Near Command Index

BTS3601C supports two kinds of users, with their names fixedly as system and guest. The system users can execute all commands, while guest users can execute only part of the commands.

In the following commands index, mark “ ” means that the corresponding user can execute the corresponding command, while "×" means the contrary.

Command	Meaning	Level	
		system	guest
ADD BTSCELL	Add BTS Cell		×
BLK BTSRES	Block BTS Cell Resource		×
DSP BTSBRDELECLBL	Query BTS Board Electronic Label		
DSP BTSBRDSPECSTAT	Query BTS Board Special Status		
DSP BTSBRDSTAT	Query BTS Board Status		
DSP BTSBRDVER	Query Board Version Information		
DSP BTSBRDWARNTHD	Query Board Alarm Threshold		
DSP BTSCFG	Query BTS Configuration Data		
DSP BTSE1TS	Query E1 TS Configuration		
DSP BTSETHERIP	Query BTS Ethernet IP address		
DSP BTSIFSTAT	Query BTS Interface Status		
DSP BTSLOG	Query BTS Log		
DSP BTSSERVICEPARA	Query BTS Service Parameter		×
HELP	Help command		
LST BTSCURALM	Query BTS Current Alarm		
LST BTSHISALM	Query BTS History Alarm		
MOD BTSPWD	Modify user password		
RMV BTSCELL	Delete BTS Cell		×
RMV BTSCFG	Delete BTS Configuration Data		×
RMV BTSHISALM	Delete BTS History Alarm		×
RST BTSBRD	Reset BTS Board		×
SAV BTSCFG	Save BTS Configuration Data		×
SET BTSAUTOCFG	Start BTS Auto Configuration		×
SET BTSCLK	Set BTS Clock Parameter		×
SET BTSCLKSRCMODE	Set BTS Clock Source Work Mode		×
SET BTSCPPARA	Set BTS CP Parameter		×
SET BTSE1TS	Configure E1 TS		×
SET BTSETHERIP	Set BTS Ethernet IP Address		×
SET BTSGPSCLK	Set BTS GPS Clock Parameter		×
SET BTSMBPBWARNTHD	Set MBPB Environment Alarm Threshold		×
SET BTSODUWARNTHD	Set MTRB Environment Alarm Threshold		×
SET BTSPOWEROFF	Cut Off BTS Power		×
SET BTSSERVICEPARA	Set BTS Service Parameter		×
SET BTSSIGLNK	Set BTS Signaling Link		×
SET BTSTRFLNK	Set BTS Traffic Link		×
STP BTSE1TST	Stop BTS E1 Test		×
STP BTSIFTRC	Stop BTS Interface Message Tracing		
STP BTSLPBACKTST	Stop Board Loopback Test		×
STP BTSRESTRC	Stop BTS Resource Tracing		
STR BTS	Startup BTS		×
STR BTSE1TST	Start BTS E1 Test		×
STR BTSIFTRC	Stop BTS Interface Message Tracing		

Command	Meaning	Level	
		system	guest
STR BTSLPBACKTST	Start Board Loopback Test		×
STR BTSRESTRC	Start BTS Resource Tracing		
UBL BTSRES	Unblock BTS Resource		×