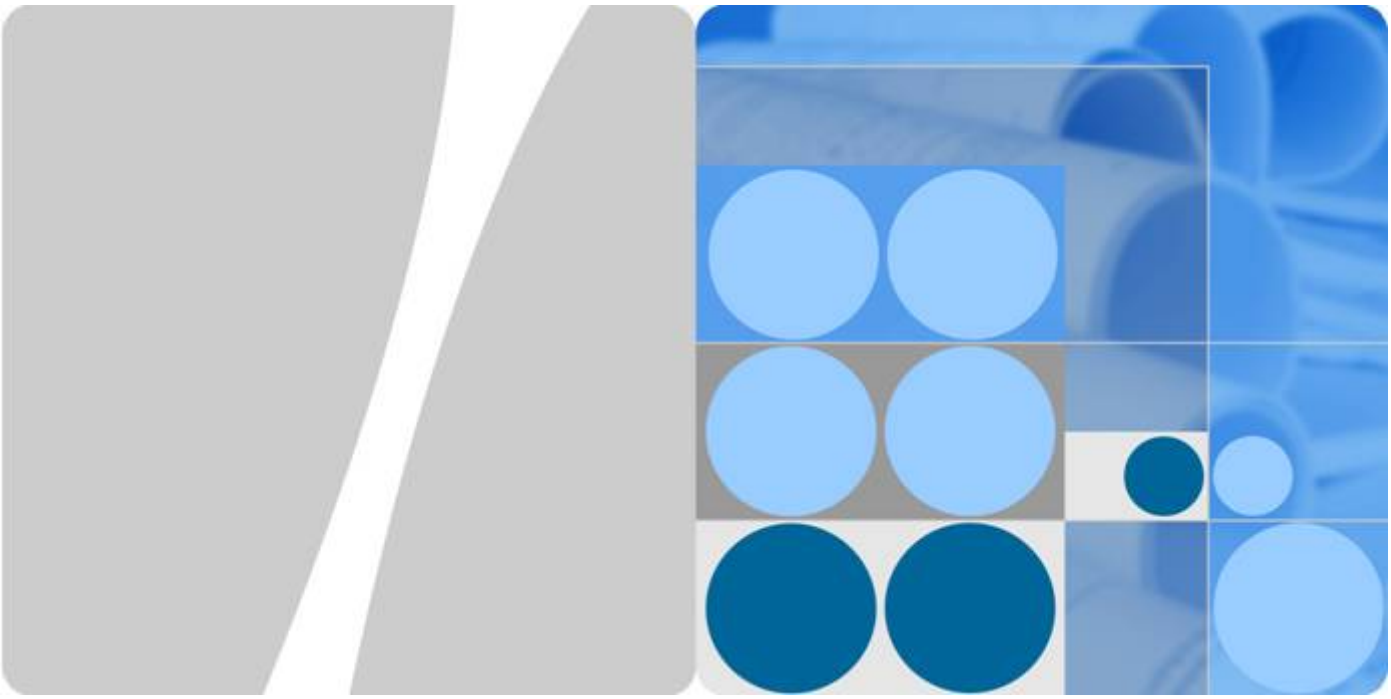

BTS3902E WCDMA

Installation Guide

Issue 10

Date 2014-05-16

HUAWEI TECHNOLOGIES CO., LTD.

Copyright © Huawei Technologies Co., Ltd. 2014. All rights reserved.

No part of this document may be reproduced or transmitted in any form or by any means without prior written consent of Huawei Technologies Co., Ltd.

Trademarks and Permissions

HUAWEI and other Huawei trademarks are trademarks of Huawei Technologies Co., Ltd.
All other trademarks and trade names mentioned in this document are the property of their respective holders.

Notice

The purchased products, services and features are stipulated by the contract made between Huawei and the customer. All or part of the products, services and features described in this document may not be within the purchase scope or the usage scope. Unless otherwise specified in the contract, all statements, information, and recommendations in this document are provided "AS IS" without warranties, guarantees or representations of any kind, either express or implied.

The information in this document is subject to change without notice. Every effort has been made in the preparation of this document to ensure accuracy of the contents, but all statements, information, and recommendations in this document do not constitute a warranty of any kind, express or implied.

Huawei Technologies Co., Ltd.

Address: Huawei Industrial Base
Bantian, Longgang
Shenzhen 518129
People's Republic of China

Website: http://www.huawei.com

Email: support@huawei.com

About This Document

Purpose

This document describes the procedures for installing a BTS3902E WCDMA in different scenarios. It also provides checklists for hardware installation.

Product Version

The following table lists the product version related to this document.

Product Name	Product Version
BTS3902E WCDMA (referred to as the BTS3902E in this document)	V200R013C00 and later versions
	V100R008C00 and later versions The single-mode base station version mapping to V100R008C00 is: NodeB V200R015C00

Intended Audience

This document is intended for:

- Base station installation engineers
- System engineers
- Site maintenance engineers

Organization

1 Changes in *BTS3902E WCDMA Installation Guide*

This chapter describes the changes in *BTS3902E WCDMA Installation Guide*.

2 Installation Preparations

This chapter describes instrument preparations, and skills and qualifications that installation engineers must possess.

Copyright © Huawei Technologies Co., Ltd.

3 Information About the Installation

This chapter describes the information that you must be familiar with before installing a BTS3902E, including the BTS3902E application scenarios, installation options, physical supports, and installation clearance requirements.

4 Unpacking the Equipment

Unpack and check the delivered equipment to ensure that all the materials are included and intact.

5 Obtaining the ESN

The Electronic Serial Number (ESN) is a unique identifier of a device. It is used during base station commissioning. Therefore, record the ESN before installing the BTS3902E.There are two types of the BTS3902E. This document uses one type as the example to describe.

6 Installation Process

This chapter describes the procedures for installing the BTS3902E. The procedures involve installing a BTS3902E, installing BTS3902E cables, checking the BTS3902E hardware installation, and powering on the BTS3902E.

7 Installing a BTS3902E (using aluminum mounting kits)

This chapter describes the procedure for installing a BTS3902E with an external antenna, when an aluminum mounting kit is used. The BTS3902E can be installed on a metal pole, wall, wood pole, or IFS06 in different scenarios.

8 Installing a BTS3902E (using angle-adjustable mounting kits)

This chapter describes the procedure for installing a BTS3902E with an embedded antenna, when an angle-adjustable mounting kit is used. The BTS3902E can be installed on a metal pole, wall, wood pole in different scenarios.

9 (Optional) Installing the AC Surge Protection Box and Cables

This chapter describes the dimensions, installation clearance requirements, and installation options of an AC surge protection box as well as the procedure for installing the surge protection box. The AC surge protection box can be configured when the BTS3902E is installed outdoors. Two types of surge protection boxes SPD60D and SPM60A are available for the BTS3902E.

10 Installing Cables

This chapter describes the procedures and precautions for installing the PGND cables, power cables, and transmission cables for BTS3902Es installed in various scenarios. It also describes the procedures and precautions for installing an optional alarm cable.

11 Installing the Housing

This chapter describes the procedures for installing the upper housing and optional camouflage shell for a BTS3902E after the BTS3902E and related cables are installed. There are two types of the BTS3902E. This document uses one type as the example to describe how to install the housing.

12 Checking the BTS3902E Hardware Installation

This chapter describes how to check the hardware installation after a BTS3902E is installed.

13 Performing a Power-On Check on the BTS3902E

Copyright © Huawei Technologies Co., Ltd.

This chapter describes the procedure for performing a power-on check on the BTS3902E.

14 References

This chapter describes reference information during installation.

Conventions

Symbol Conventions

The symbols that may be found in this document are defined as follows.

Symbol	Description
DANGER	Indicates an imminently hazardous situation which, if not avoided, will result in death or serious injury.
WARNING	Indicates a potentially hazardous situation which, if not avoided, could result in death or serious injury.
CAUTION	Indicates a potentially hazardous situation which, if not avoided, may result in minor or moderate injury.
NOTICE	Indicates a potentially hazardous situation which, if not avoided, could result in equipment damage, data loss, performance deterioration, or unanticipated results. NOTICE is used to address practices not related to personal injury.
NOTE	Calls attention to important information, best practices and tips. NOTE is used to address information not related to personal injury, equipment damage, and environment deterioration.

General Conventions

The general conventions that may be found in this document are defined as follows.

Convention	Description
Times New Roman	Normal paragraphs are in Times New Roman.
Boldface	Names of files, directories, folders, and users are in **boldface**. For example, log in as user **root**.
Italic	Book titles are in *italics*.
`Courier New`	Examples of information displayed on the screen are in Courier New.

Copyright © Huawei Technologies Co., Ltd.

Command Conventions

The command conventions that may be found in this document are defined as follows.

Convention	Description
Boldface	The keywords of a command line are in **boldface**.
Italic	Command arguments are in *italics*.
[ ]	Items (keywords or arguments) in brackets [ ] are optional.
{ x | y | ... }	Optional items are grouped in braces and separated by vertical bars. One item is selected.
[x | y | ...]	Optional items are grouped in brackets and separated by vertical bars. One item is selected or no item is selected.
{ x | y | ... }*	Optional items are grouped in braces and separated by vertical bars. A minimum of one item or a maximum of all items can be selected.
[x | y | ...]*	Optional items are grouped in brackets and separated by vertical bars. Several items or no item can be selected.

GUI Conventions

The GUI conventions that may be found in this document are defined as follows.

Convention	Description
Boldface	Buttons, menus, parameters, tabs, window, and dialog titles are in **boldface**. For example, click **OK**.
>	Multi-level menus are in **boldface** and separated by the ">" signs. For example, choose **File** > **Create** > **Folder**.

Keyboard Operations

The keyboard operations that may be found in this document are defined as follows.

Format	Description
Key	Press the key. For example, press **Enter** and press **Tab**.
Key 1+**Key 2**	Press the keys concurrently. For example, pressing **Ctrl**+**Alt**+**A** means the three keys should be pressed concurrently.
Key 1, **Key 2**	Press the keys in turn. For example, pressing **Alt**, **A** means the two keys should be pressed in turn.

Copyright © Huawei Technologies Co., Ltd.

Mouse Operations

The mouse operations that may be found in this document are defined as follows.

Action	Description
Click	Select and release the primary mouse button without moving the pointer.
Double-click	Press the primary mouse button twice continuously and quickly without moving the pointer.
Drag	Press and hold the primary mouse button and move the pointer to a certain position.

Copyright © Huawei Technologies Co., Ltd.

Contents

About This Document.....ii

1 Changes in *BTS3902E WCDMA Installation Guide*.....1

2 Installation Preparations.....6

2.1 Document Preparations.....7

2.2 Tools and Instruments.....7

2.3 Skills and Requirements for Onsite Personnel.....8

3 Information About the Installation.....9

3.1 BTS3902E Application Scenarios.....10

3.2 BTS3902E Installation Options.....10

3.3 Installation Clearance Requirements.....17

3.4 Mounting Kits for Installing a BTS3902E.....23

4 Unpacking the Equipment.....27

5 Obtaining the ESN.....29

6 Installation Process.....32

7 Installing a BTS3902E (using aluminum mounting kits).....34

7.1 Installing a BTS3902E on a Pole with the Diameter of 60 mm to 114 mm (2.36 in. to 4.49 in.).....35

7.2 Installing a BTS3902E on a Pole with the Diameter of 114 mm to 400 mm (4.49 in. to 15.75 in.).....36

7.3 Installing a BTS3902E on a Wall.....40

7.4 Installing a BTS3902E on a Wood Pole with the Diameter of 200 mm to 400 mm (7.87 in. to 15.75 in.).....44

7.5 Installing BTS3902Es on an IFS06.....49

7.5.1 Assembling the IFS06.....49

7.5.2 Installing the IFS06.....52

7.5.2.1 Installing the IFS06 on the Concrete Floor.....52

7.5.2.2 Installing the IFS06 on the ESD Floor.....55

7.5.3 Installing a Main Bracket.....62

7.5.4 Installing an IFS06 PGND Cable.....66

7.5.5 Installing BTS3902Es.....68

8 Installing a BTS3902E (using angle-adjustable mounting kits).....70

8.1 Installing a BTS3902E on a Pole with the Diameter of 60 mm to 114 mm (2.36 in. to 4.49 in.).....71

Copyright © Huawei Technologies Co., Ltd.

8.2 Installing a BTS3902E on a Pole with the Diameter of 114 mm to 400 mm (4.49 in. to 15.75 in.).....75
8.3 Installing a BTS3902E on a Wall.....81
8.4 Installing a BTS3902E on a Wood Pole with the Diameter of 200 mm to 400 mm (7.87 in. to 15.75 in.).....89
9 (Optional) Installing the AC Surge Protection Box and Cables.....96
9.1 Installing the SPD60D and Cables (Working at the 1.9 GHz or 2.1 GHz Frequency Band).....97
9.1.1 Dimensions and Installation Clearance Requirements of an SPD60D.....97
9.1.2 Installation Options of an SPD60D.....98
9.1.3 Installing an SPD60D.....102
9.1.4 Installing Cables for an SPD60D.....107
9.2 Installing the SPM60A and Cables (Working at the 850 MHz Frequency Band).....112
9.2.1 Dimensions and Installation Clearance Requirements of an SPM60A.....112
9.2.2 Installation Options of an SPM60A.....114
9.2.3 Installing an SPM60A.....115
9.2.4 Installing Cables for an SPM60A.....118
10 Installing Cables.....125
10.1 Cabling Requirements.....126
10.2 Cable Connections.....127
10.3 Installing a PGND Cable and Equipotential Cable.....136
10.4 Installing a BTS3902E Power Cable.....141
10.4.1 Installing an AC Power Cable (Working at the 1.9 GHz, 2.1 GHz or 850 MHz Frequency Band).....141
10.4.2 Installing a DC Power Cable (Working at the AWS Frequency Band).....144
10.5 Installing Transmission Cables.....146
10.5.1 Installing an FE/GE Cable.....146
10.5.2 Installing an FE/GE Fiber Optic Cable.....147
10.5.3 Installing a Cascading FE/GE Fiber Optic Cable.....151
10.5.4 Installing a Cascading FE/GE Cable.....153
10.6 (Optional) Installing a BTS3902E RF Jumper.....154
10.7 (Optional) Installing the Alarm Cable.....157
11 Installing the Housing.....159
11.1 (Optional) Installing a Camouflage Shell.....160
11.2 Installing the Upper Housing.....162
12 Checking the BTS3902E Hardware Installation.....164
13 Performing a Power-On Check on the BTS3902E.....166
14 References.....168
14.1 Preparing OT Terminals of the AC Input Power Cable to the AC Surge Protection Box.....169
14.1.1 Preparing OT Terminals of the AC Input Power Cable to the SPD60D.....169
14.1.2 Preparing OT Terminals to the Power Cable Connected to the SPM60A.....171
14.2 Adding a Waterproofed Round DC Connector to the BTS3902E Power Cable on the BTS3902E Side.....174

Copyright © Huawei Technologies Co., Ltd.

14.3 Installing a Ground Clip.....180

Copyright © Huawei Technologies Co., Ltd.

1 Changes in *BTS3902E WCDMA Installation Guide*

This chapter describes the changes in *BTS3902E WCDMA Installation Guide*.

10 (2014-05-16)

This is the tenth commercial release.

Compared with 09 (2014-02-28), no information is added.

Compared with 09 (2014-02-28), this issue incorporates the following change:

Topic	Change Description
Entire document	The BTS3902E working at the 850 MHz frequency band is added.

Compared with 09 (2014-02-28), no information is deleted.

09 (2014-02-28)

This is the ninth commercial release.

Compared with 08 (2013-12-05), no information is added.

Compared with 08 (2013-12-05), this issue incorporates the following change:

Topic	Change Description
About This Document	Modified the description of the application scope of this document.

Compared with 08 (2013-12-05), no information is deleted.

Copyright © Huawei Technologies Co., Ltd.

08 (2013-12-05)

This is the eighth commercial release.

Compared with 07 (2013-11-30), no information is added.

Compared with 07 (2013-11-30), this issue incorporates the following change:

Topic	Change Description
Entire document	The DC-powered BTS3902E working at the AWS frequency band is added.

Compared with 07 (2013-11-30), no information is deleted.

07 (2013-11-30)

This is the seventh commercial release.

Compared with 06 (2013-08-22), this issue includes the following new information:

- **10.5.4 Installing a Cascading FE/GE Cable**

Compared with 06 (2013-08-22), this issue incorporates the following changes:

Topic	Change Description
About This Document	V100R008C00 is added to the application scope of this document.
10.2 Cable Connections	Modified the description about cable connections of the BTS3902E.

Compared with 06 (2013-08-22), this issue deletes the following topics:

- BTS3902E Exterior
- BTS3902E Ports
- BTS3902E Indicators

06 (2013-08-22)

This is the sixth commercial release.

Compared with 05 (2013-04-15), this issue includes the following new information:

- **3.1 BTS3902E Application Scenarios**

Compared with 05 (2013-04-15), no information is changed.

Compared with 05 (2013-04-15), no information is deleted.

05 (2013-04-15)

This is the fifth commercial release.

Copyright © Huawei Technologies Co., Ltd.

Compared with 04 (2012-12-30), no information is added.

Compared with 04 (2012-12-30), this issue incorporates the following change:

Topic	Change Description
10.5.2 Installing an FE/GE Fiber Optic Cable	Modified the method of installing the optical fiber.

Compared with 04 (2012-12-30), no information is deleted.

04 (2012-12-30)

This is the fourth commercial release.

Compared with 03 (2012-09-15), no information is added.

Compared with 03 (2012-09-15), this issue incorporates the following changes:

Topic	Change Description
7.4 Installing a BTS3902E on a Wood Pole with the Diameter of 200 mm to 400 mm (7.87 in. to 15.75 in.)	Added the diameter range of the wood pole on which a BTS3902E can be installed.
8.4 Installing a BTS3902E on a Wood Pole with the Diameter of 200 mm to 400 mm (7.87 in. to 15.75 in.)	
7.5.2.2 Installing the IFS06 on the ESD Floor	Modified the description about installing the IFS06 on the ESD floor.
8.1 Installing a BTS3902E on a Pole with the Diameter of 60 mm to 114 mm (2.36 in. to 4.49 in.)	Modified the method of installing the main and auxiliary mounting brackets on the pole during the procedure for installing a BTS3902E using angle-adjustable mounting kits.
10.5.2 Installing an FE/GE Fiber Optic Cable	Modified the description about installing the round connector.
10.5.3 Installing a Cascading FE/GE Fiber Optic Cable	

Compared with 03 (2012-09-15), no information is deleted.

03 (2012-09-15)

This is the third commercial release.

Compared with 02 (2012-03-15), no information is added.

Compared with 02 (2012-03-15), this issue incorporates the following change:

Copyright © Huawei Technologies Co., Ltd.

Topic	Change Description
10.2 Cable Connections	Modified the description about cable connections.

Compared with 02 (2012-03-15), no information is deleted.

02 (2012-03-15)

This is the second commercial release.

Compared with 01 (2011-11-19), this issue includes the following new information:

- **3.4 Mounting Kits for Installing a BTS3902E**
- **8 Installing a BTS3902E (using angle-adjustable mounting kits)**

Compared with 01 (2011-11-19), this issue incorporates the following changes:

Topic	Change Description
Entire document	Modified the flanges on the optical and electrical ports on the BTS3902E to hexagons.
10.2 Cable Connections	Deleted the description about cable connections of power over Ethernet (PoE).

Compared with 01 (2011-11-19), no information is deleted.

01 (2011-11-19)

This is the first commercial release.

Compared with draft B (2011-09-22), no information is added.

Compared with draft B (2011-09-22), no information is changed.

Compared with draft B (2011-09-22), no information is deleted.

Draft B (2011-09-22)

This is a draft release.

Compared with draft A (2011-06-30), this issue includes the following new information:

- **7.5 Installing BTS3902Es on an IFS06**

Compared with draft A (2011-06-30), this issue incorporates the following changes:

Topic	Change Description
5 Obtaining the ESN	The position of the ESN is modified.

Copyright © Huawei Technologies Co., Ltd.

Topic	Change Description
10.5.2 Installing an FE/GE Fiber Optic Cable	Added the caution for installing an optical module.
10.5.3 Installing a Cascading FE/GE Fiber Optic Cable	

Compared with draft A (2011-06-30), no information is deleted.

Draft A (2011-06-30)

This is a draft release.

Copyright © Huawei Technologies Co., Ltd.

2 Installation Preparations

About This Chapter

This chapter describes instrument preparations, and skills and qualifications that installation engineers must possess.

2.1 Document Preparations
This section describes the reference documents that must be ready before the installation.

2.2 Tools and Instruments
This section lists the tools and instruments that must be obtained before installation.

2.3 Skills and Requirements for Onsite Personnel
Onsite personnel must be qualified and trained. Before performing any operation, onsite personnel must be familiar with correct operation methods and safety precautions.

Copyright © Huawei Technologies Co., Ltd.

2.1 Document Preparations

This section describes the reference documents that must be ready before the installation.

- Before the installation, you must familiar with the following reference documents:
  - BTS3902E WCDMA Hardware Description
  - Safety Information
- During the installation, you must familiar with the following reference document:
  - Installation Reference

2.2 Tools and Instruments

This section lists the tools and instruments that must be obtained before installation.

Marker (diameter ≤ 10 mm or 0.39 in.)	Hammer drill (with a φ12 bit, φ14 bit, φ16 bit, and φ18 bit) 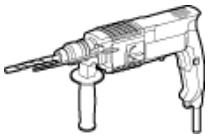	Rubber mallet
Phillips screwdriver (M3 to M6) Flat-head screwdriver (M3 to M6)	Torque screwdriver (M3 to M8) 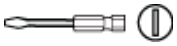 (M3 to M8)	Diagonal pliers
Wire clippers	Wire stripper	COAX crimping tool 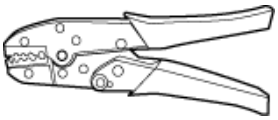
Crimping tool for power cables 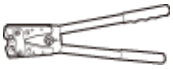	Utility knife	Heat gun

Copyright © Huawei Technologies Co., Ltd.

Combination wrench (size: 17 mm or 0.67 in., 19 mm or 0.75 in., 21 mm or 0.83 in.) 	Adjustable wrench (size ⩾ 32 mm or 1.26 in.) Adjustable wrench (size ⩽ 19 mm or 0.75 in.) 	Torque wrench (size: 17 mm or 0.67 in., 19 mm or 0.75 in., 21 mm or 0.83 in.) Torque wrench (30 N·m to 50 N·m, or 265.52 lbf·in. to 442.54 lbf·in.) 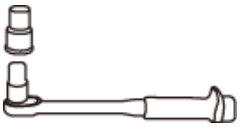
Socket wrench (M10 and M12) 	Level 	Measuring tape
ESD gloves 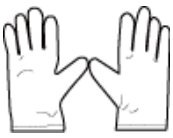 ESD wrist strap 	Vacuum cleaner 	Multimeter

2.3 Skills and Requirements for Onsite Personnel

Onsite personnel must be qualified and trained. Before performing any operation, onsite personnel must be familiar with correct operation methods and safety precautions.

Before the installation, pay attention to the following items:

- The customer's technical engineers must be trained by Huawei and be familiar with the proper installation and operation methods.
- The number of onsite personnel depends on the engineering schedule and installation environment. Generally, only three to five onsite personnel are necessary.

Copyright © Huawei Technologies Co., Ltd.

3 Information About the Installation

About This Chapter

This chapter describes the information that you must be familiar with before installing a BTS3902E, including the BTS3902E application scenarios, installation options, physical supports, and installation clearance requirements.

3.1 BTS3902E Application Scenarios
This section describes the application scenarios of the BTS3902E.

3.2 BTS3902E Installation Options
This section describes the BTS3902E installation options. The BTS3902E can be installed on a metal pole, wood pole, wall, or IFS06.

3.3 Installation Clearance Requirements
This section describes the clearance requirements for installing a BTS3902E on a metal pole, wood pole, wall, or IFS06.

3.4 Mounting Kits for Installing a BTS3902E
This section describes the mounting kits for a BTS3902E and the precautions for hoisting the BTS3902E.

Copyright © Huawei Technologies Co., Ltd.

3.1 BTS3902E Application Scenarios

This section describes the application scenarios of the BTS3902E.

The BTS3902E works well for covering hot spots and reducing blind spots. Insufficient network capacity in hot spots and blind spots greatly affect user experience. With its flexible deployment, the low-cost BTS3902E helps operators solve these problems. **Figure 3-1**application scenarios for the BTS3902E.

Figure 3-1 BTS3902EApplication Scenarios

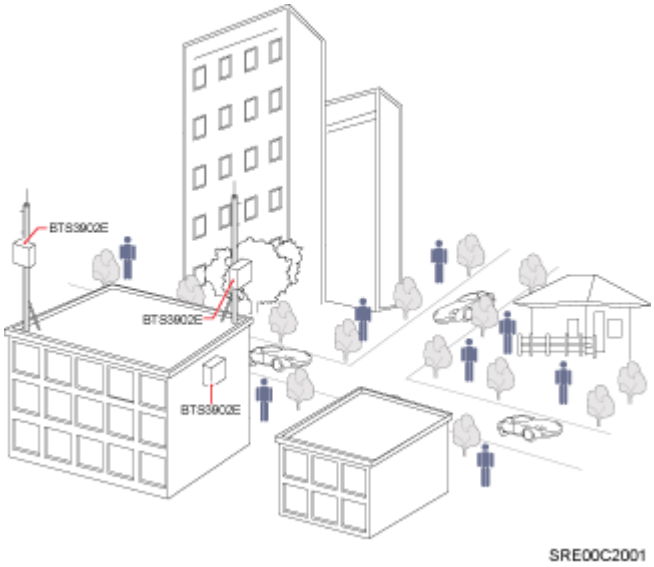

3.2 BTS3902E Installation Options

This section describes the BTS3902E installation options. The BTS3902E can be installed on a metal pole, wood pole, wall, or IFS06.

On a Metal Pole with the Diameter Ranging from 60 mm to 114 mm (2.36 in. to 4.49 in.)

Figure 3-2 shows the diameter of a metal pole for installing a BTS3902E.

NOTE

The recommended diameter is 80 mm (3.15 in.).

Copyright © Huawei Technologies Co., Ltd.

Figure 3-2 Diameter of a pole

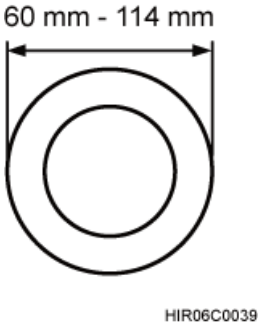

Figure 3-3 shows the BTS3902E installed on a metal pole.

Figure 3-3 BTS3902E installed on a metal pole

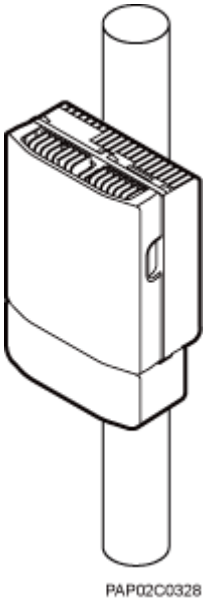

On a Metal Pole with the Diameter Ranging from 114 mm to 400 mm (4.49 in. to 15.75 in.)

Figure 3-4 shows the diameter of a metal pole for installing a BTS3902E.

Figure 3-4 Diameter of a pole

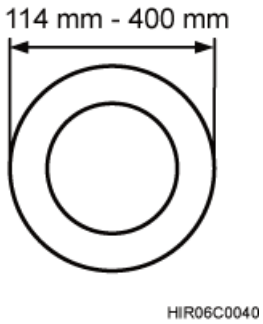

Copyright © Huawei Technologies Co., Ltd.

Figure 3-5 shows the BTS3902E installed on a metal pole.

Figure 3-5 BTS3902E installed on a metal pole

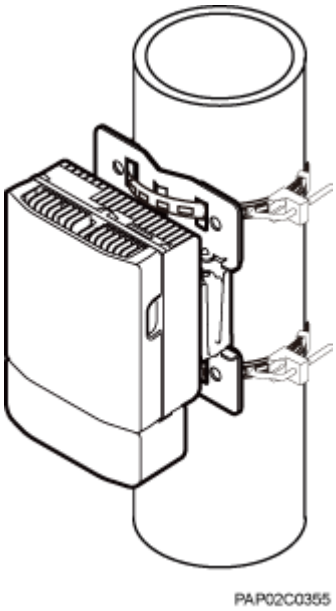

On a Wall

The wall on which a BTS3902E is installed must meet the following requirements:

- When a single BTS3902E is installed, the wall must have a capacity of bearing at least four times the weight of the BTS3902E.
- Expansion bolts must be tightened to 30 N·m (265.52 lbf·in.) to ensure the bolts work properly and the wall remains intact without cracks in it.

Figure 3-6 shows the BTS3902E installed on a wall.

Copyright © Huawei Technologies Co., Ltd.

Figure 3-6 BTS3902E installed on a wall

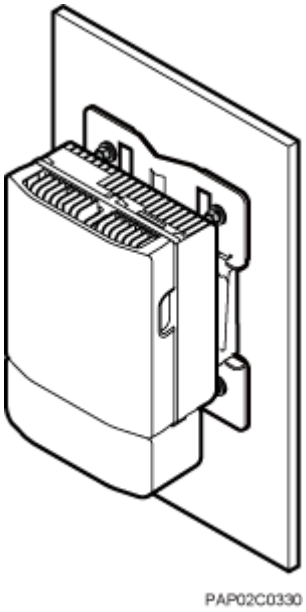

On a Wood Pole with the Diameter Ranging from 200 mm to 400 mm (7.87 in. to 15.75 in.)

Figure 3-7 shows the BTS3902E installed on a wood pole.

Figure 3-7 Diameter of a pole

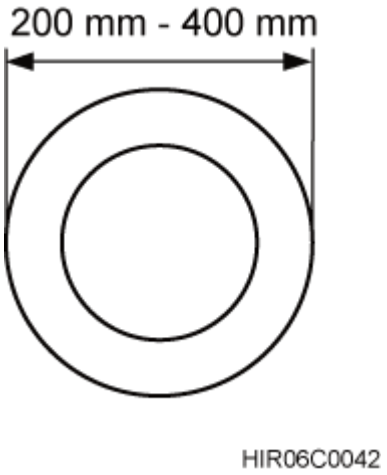

Figure 3-8 shows a BTS3902E installed on a wood pole.

Copyright © Huawei Technologies Co., Ltd.

Figure 3-8 BTS3902E installed on a wood pole

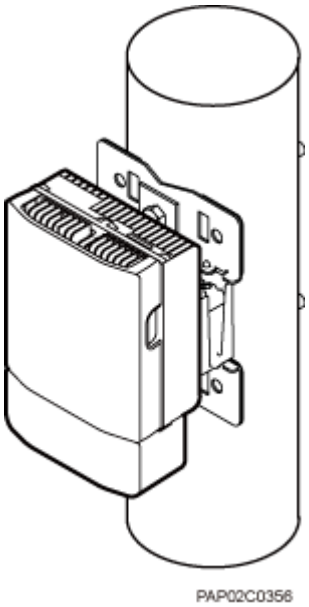

On an IFS06 Under a Cable Tray with a Restricted Height

In the scenario where a cable tray is 1.8 m to 2 m (5.91 ft. to 6.56 ft.) above the floor (height-restricted scenario), BTS3902Es are installed on beam 2 and beam 4, as shown in **Figure 3-9**.

Figure 3-9 Height-restricted scenario

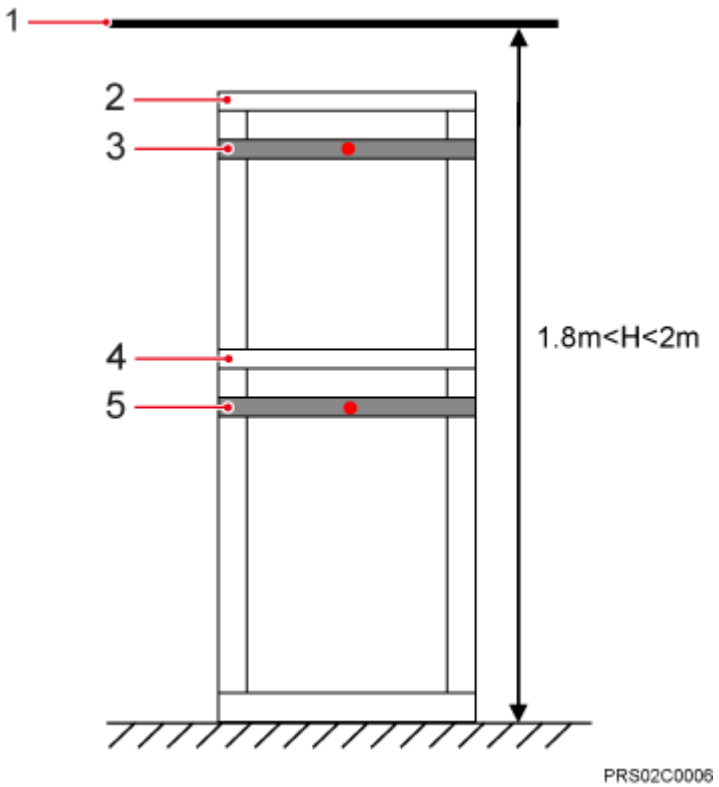

(1) Cable tray (2) Beam 1 (3) Beam 2 (4) Beam 3 (5) Beam 4

Copyright © Huawei Technologies Co., Ltd.

Figure 3-10 shows BTS3902Es installed on an IFS06 under a cable tray with a restricted height.

Figure 3-10 BTS3902Es installed on an IFS06 under a cable tray with a restricted height

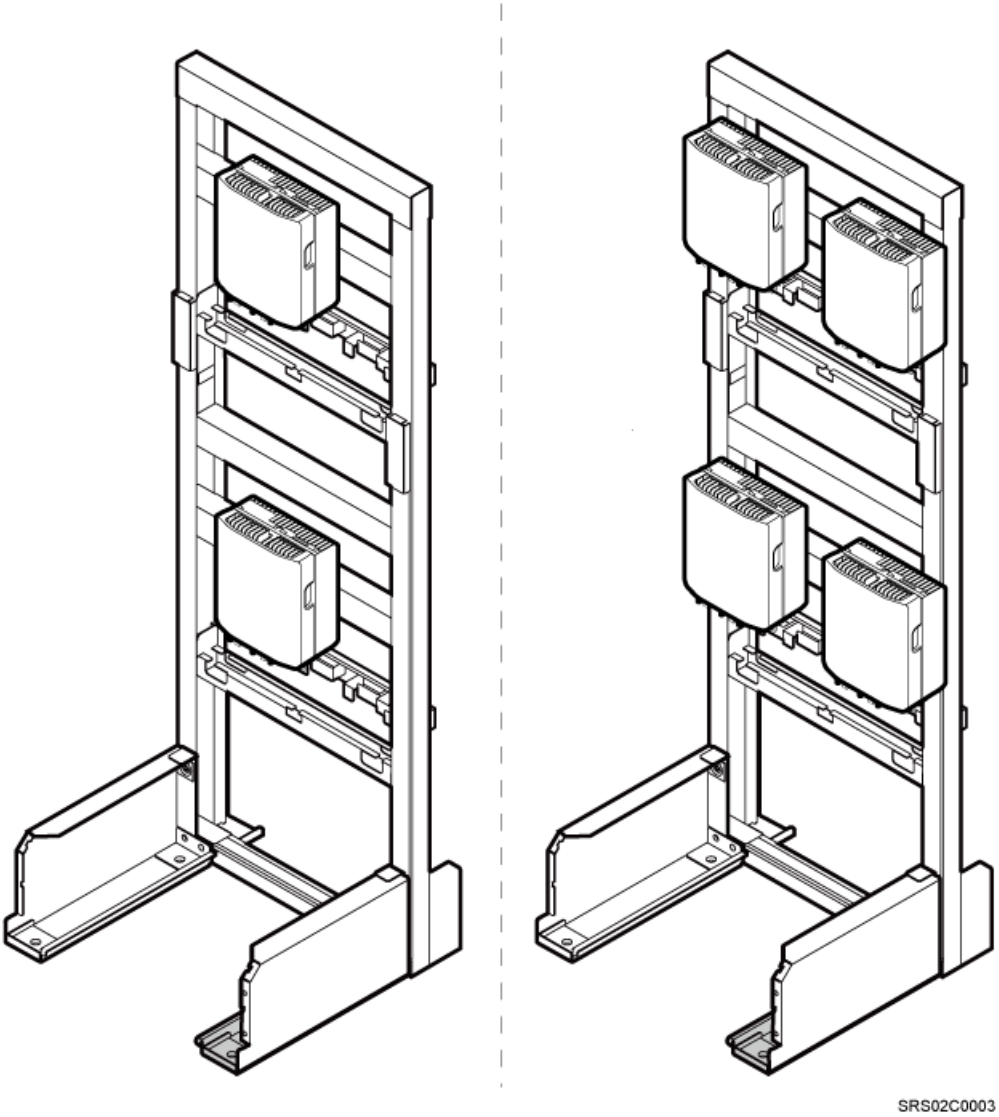

On an IFS06 Under a Cable Tray with an Unrestricted Height

In the scenario where a cable tray is more than 2 m (6.56 ft.) above the floor (height-unrestricted scenario), BTS3902Es are installed on beam 1 and beam 3 by default, as shown in **Figure 3-11**.

Copyright © Huawei Technologies Co., Ltd.

Figure 3-11 Height-unrestricted scenario

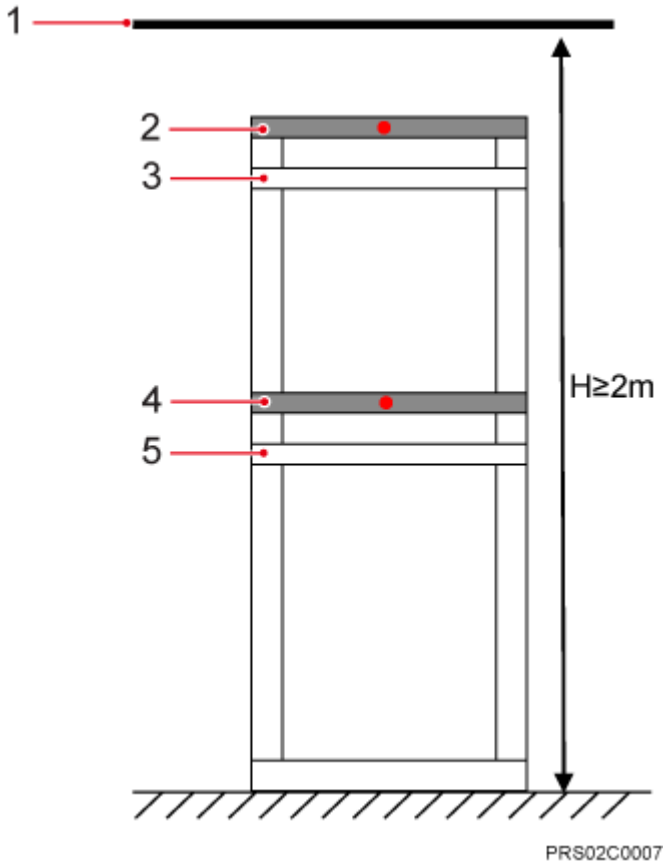

(1) Cable tray (2) Beam 1 (3) Beam 2 (4) Beam 3 (5) Beam 4

Figure 3-12 shows BTS3902Es installed on an IFS06 under a cable tray with an unrestricted height.

Copyright © Huawei Technologies Co., Ltd.

Figure 3-12 BTS3902Es installed on an IFS06 under a cable tray with an unrestricted height

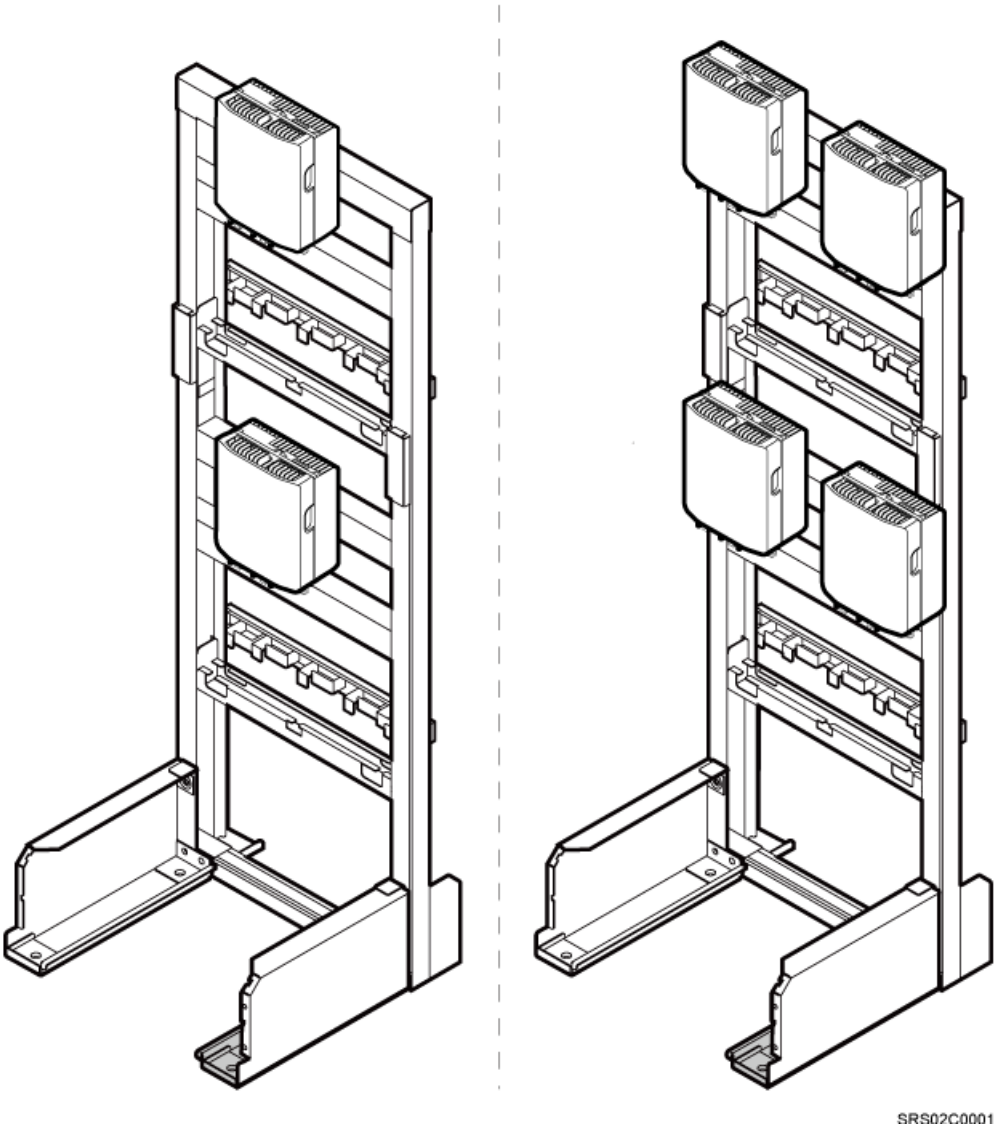

3.3 Installation Clearance Requirements

This section describes the clearance requirements for installing a BTS3902E on a metal pole, wood pole, wall, or IFS06.

Figure 3-13 shows the recommended clearance for installing a single BTS3902E.

Copyright © Huawei Technologies Co., Ltd.

Figure 3-13 Recommended clearance for installing a single BTS3902E

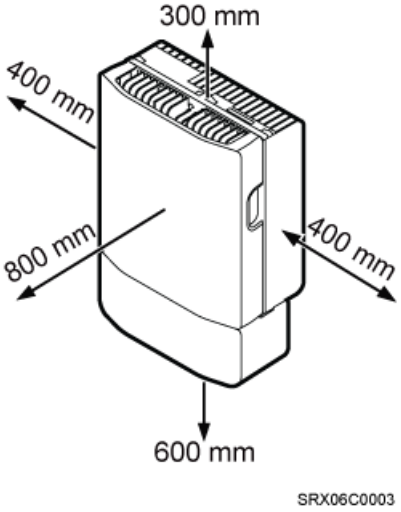

Figure 3-14 shows the minimum clearance for installing a single BTS3902E.

Figure 3-14 Minimum clearance for installing a single BTS3902E

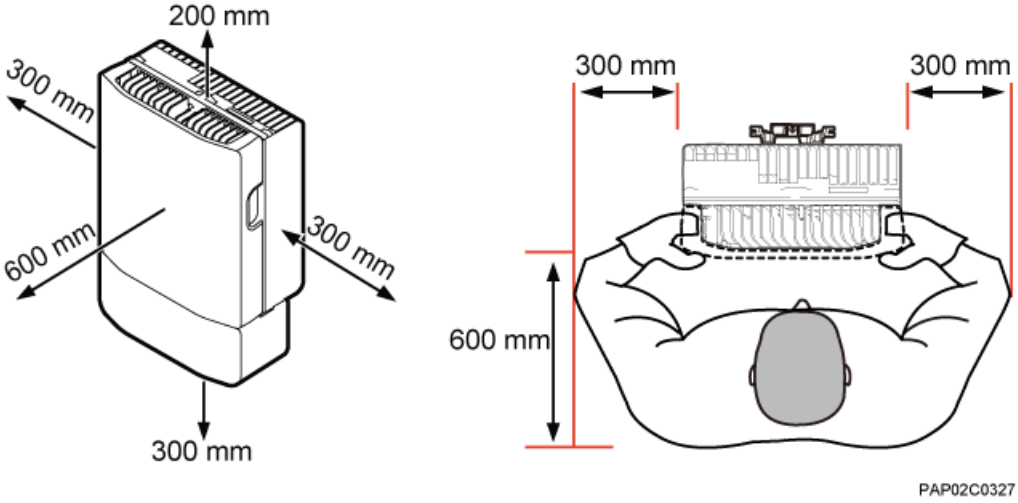

Figure 3-15 shows the recommended clearance for installing two BTS3902Es side by side.

Copyright © Huawei Technologies Co., Ltd.

Figure 3-15 Recommended clearance for installing two BTS3902Es side by side

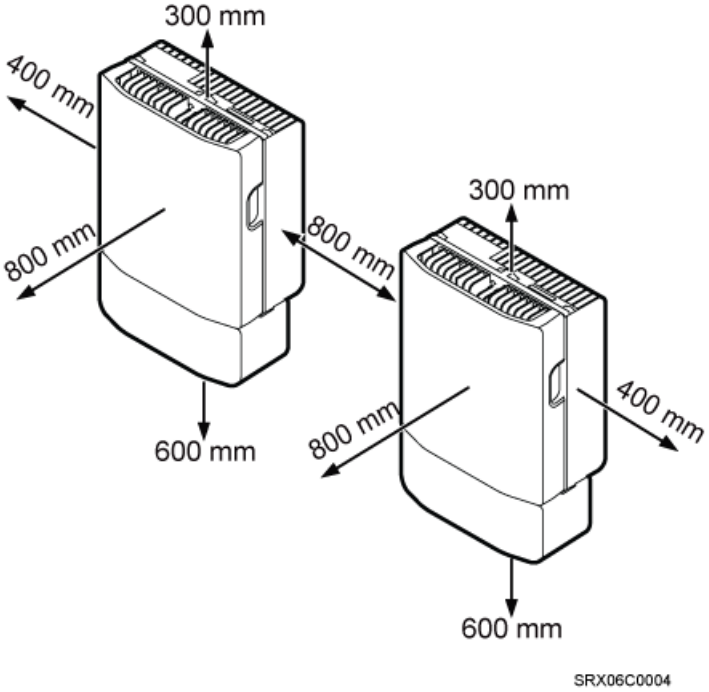

Figure 3-16 shows the minimum clearance for installing two BTS3902Es side by side.

Figure 3-16 Minimum clearance for installing two BTS3902Es side by side

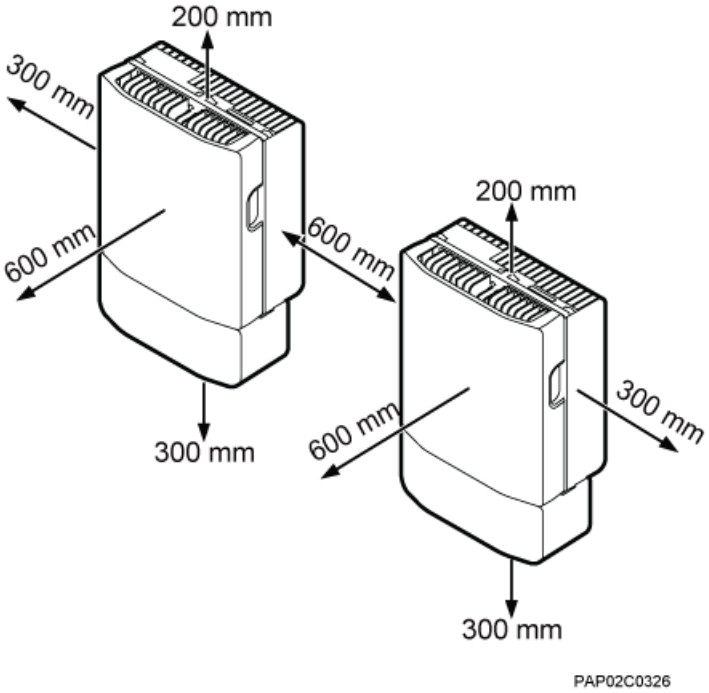

Figure 3-17 shows the recommended clearance for installing two BTS3902Es in a vertical line.

Copyright © Huawei Technologies Co., Ltd.

Figure 3-17 Recommended clearance for installing two BTS3902Es in a vertical line

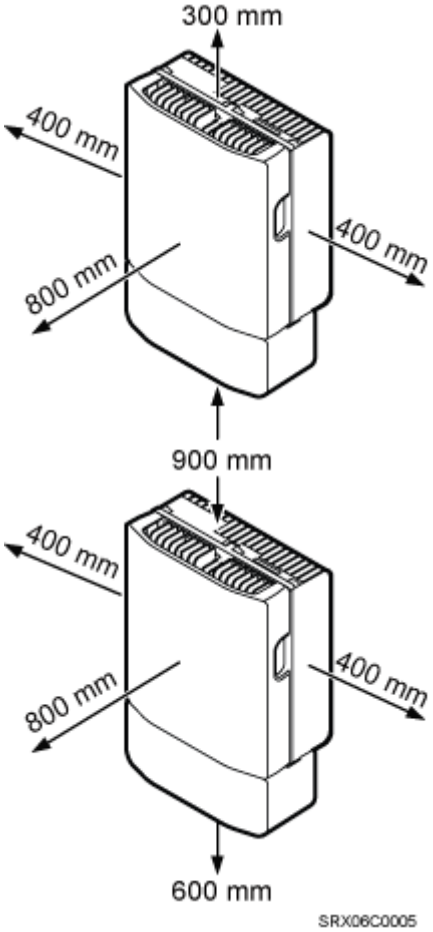

Figure 3-18 shows the minimum clearance for installing two BTS3902Es in a vertical line.

Copyright © Huawei Technologies Co., Ltd.

Figure 3-18 Minimum clearance for installing two BTS3902Es in a vertical line

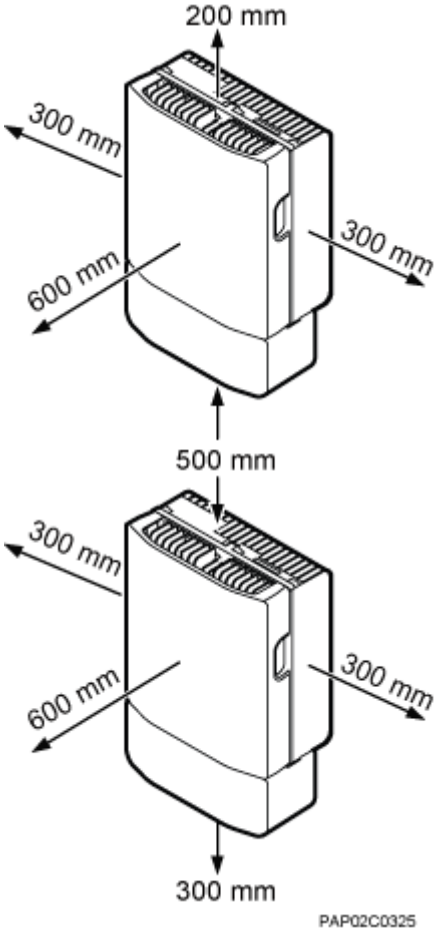

Figure 3-19 shows the recommended clearance for installing two BTS3902Es on an IFS06.

Copyright © Huawei Technologies Co., Ltd.

Figure 3-19 Recommended clearance for installing two BTS3902Es on an IFS06

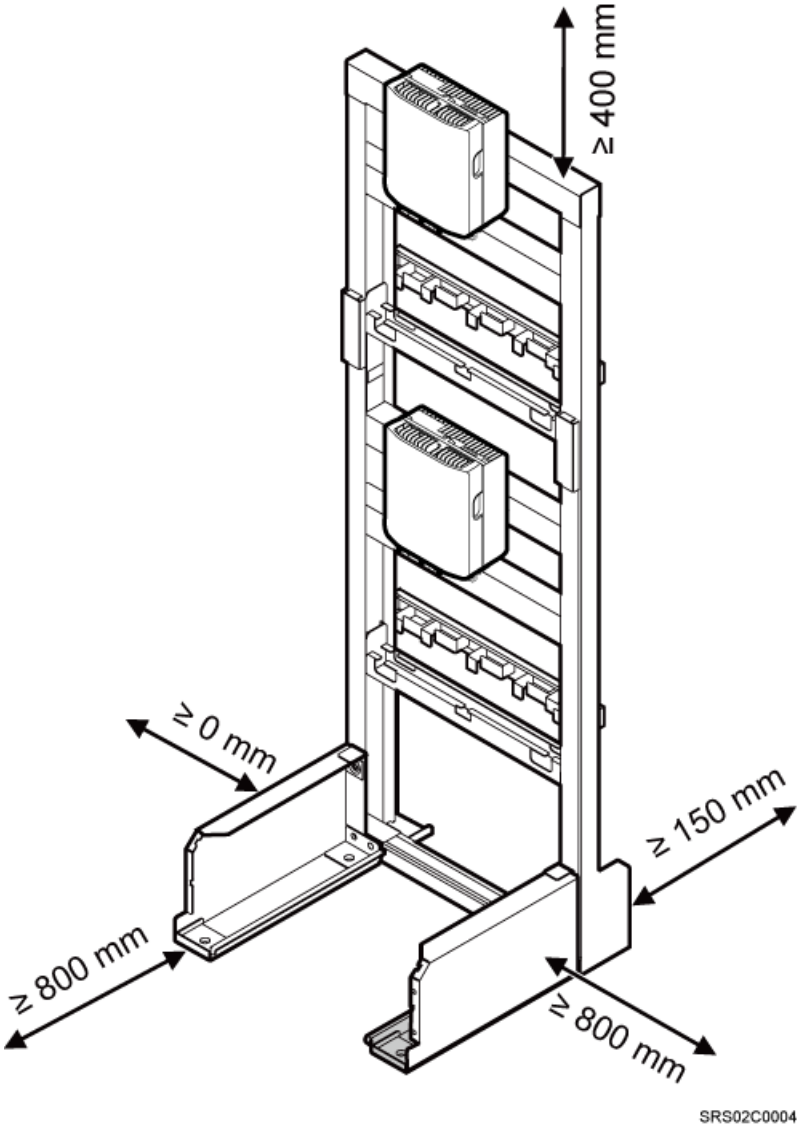

Figure 3-20 shows the minimum clearance for installing two BTS3902Es on an IFS06.

Copyright © Huawei Technologies Co., Ltd.

Figure 3-20 Minimum clearance for installing two BTS3902Es on an IFS06

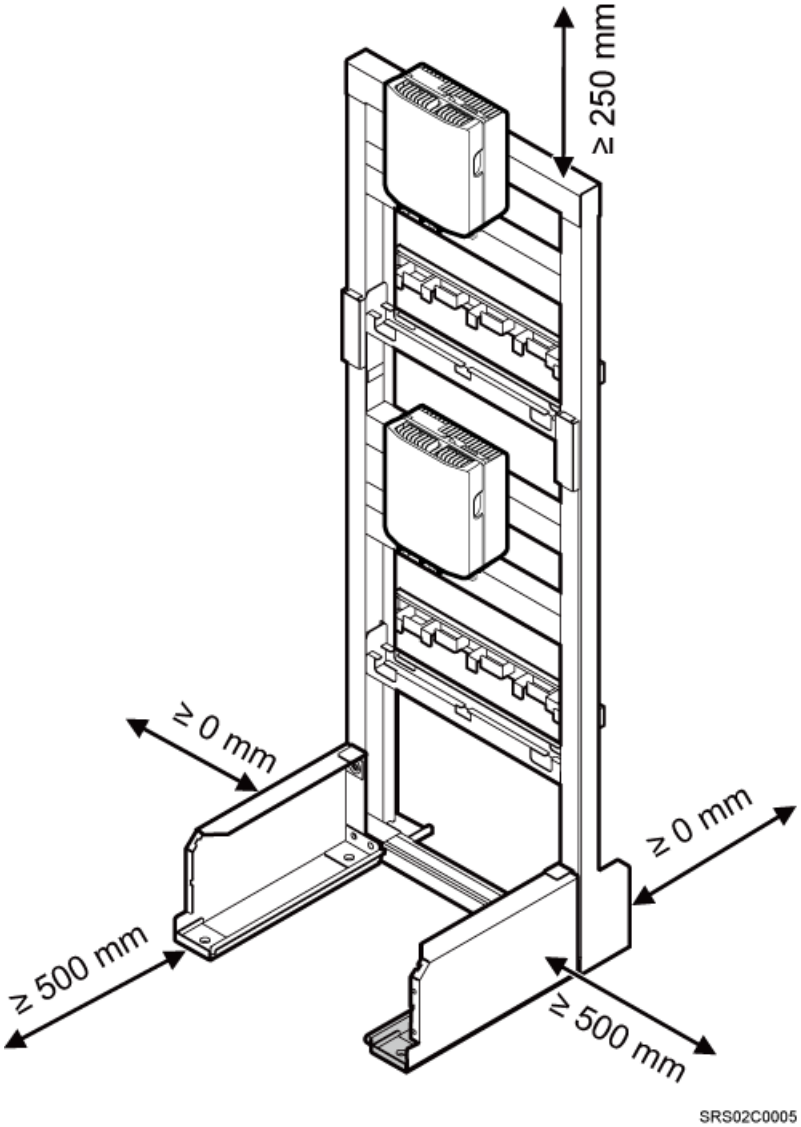

3.4 Mounting Kits for Installing a BTS3902E

This section describes the mounting kits for a BTS3902E and the precautions for hoisting the BTS3902E.

Aluminum Mounting Kits

An aluminum mounting kit consists of an attachment plate and mounting brackets. It is used for installing a BTS3902E with the external antenna.

- Attachment plate

Figure 3-21 shows the attachment plate of an aluminum mounting kit.

Copyright © Huawei Technologies Co., Ltd.

Figure 3-21 Attachment plate of an aluminum mounting kit

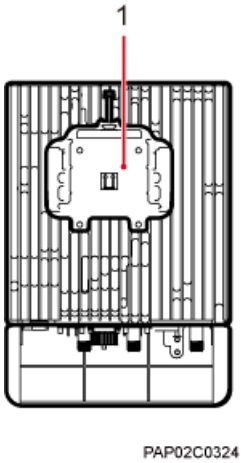

(1) Attachment plate

- Mounting bracket assembly

Figure 3-22 shows the mounting bracket assembly of an aluminum mounting kit.

Figure 3-22 Mounting bracket assembly of an aluminum mounting kit

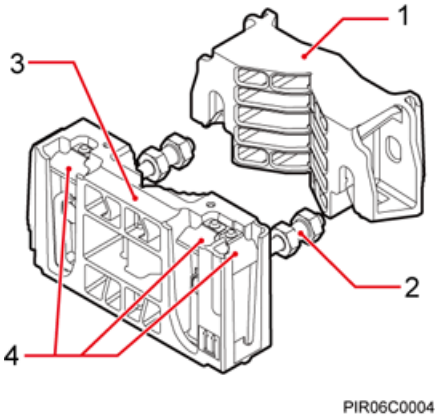

(1) Auxiliary mounting bracket (2) double-headed nut (3) Main mounting bracket (4) Hoist clamp on the main mounting bracket

Angle-Adjustable Mounting Kits

The angle-adjustable mounting kits are applied to install a BTS3902E with the embedded antenna and consists of attachment plates and mounting brackets.

- Attachment plate

Figure 3-23 shows the attachment plate of the angle-adjustable mounting kits.

Copyright © Huawei Technologies Co., Ltd.

Figure 3-23 Attachment plate of the angle-adjustable mounting kits

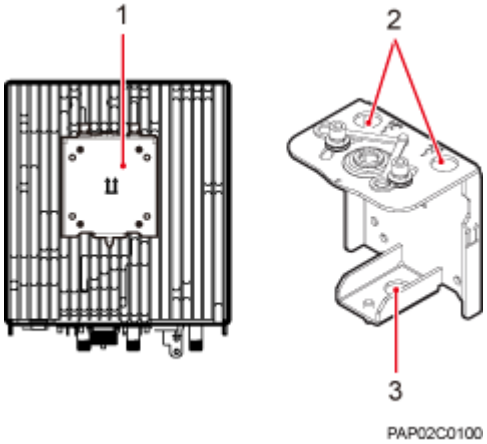

(1) Attachment plate (2) Lifting eye (3) Traction eye

- Mounting bracket assembly

Figure 3-24 shows the mounting bracket assembly of the BTS3902E.

Figure 3-24 Mounting bracket assembly of the angle-adjustable mounting kits

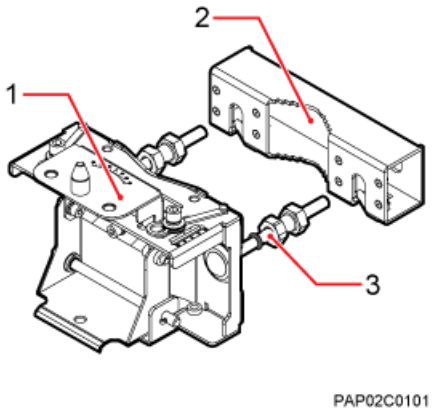

(1) Main mounting bracket (2) Auxiliary mounting bracket (3) double-headed nut

Adapting plate

Figure 3-24 shows the adapting plate assembly of the BTS3902E.

Copyright © Huawei Technologies Co., Ltd.

Figure 3-25 BTS3902E adapting plate assembly

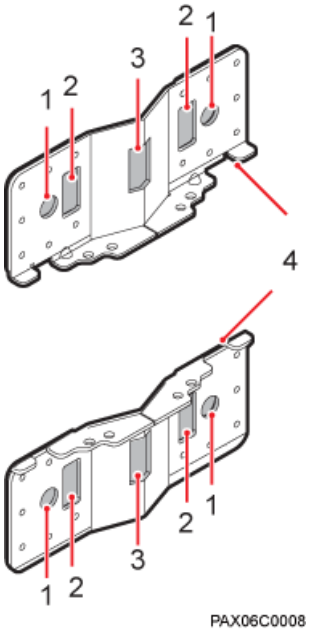

(1) Mounting hole group A (2) Mounting hole group B (3) Mounting hole group C (4) Adapting plate

Precautions for Hoisting a BTS3902E

When hoisting the BTS3902E, pay attention to the following points.

- Ensure that the housing of the BTS3902E is securely installed before hoisting. When hoisting a BTS3902E with an embedded antenna, prevent the antenna from colliding with the tower.
- Place a foam pad or cardboard on the ground to protect the housing of the BTS3902E from damage before binding the BTS3902E with a lifting sling. Do not stand the BTS3902E upright on the ground because the bottom of the BTS3902E cannot bear much weight.

Copyright © Huawei Technologies Co., Ltd.

4 Unpacking the Equipment

Unpack and check the delivered equipment to ensure that all the materials are included and intact.

Prerequisites

NOTICE

The base station must be powered on within 24 hours after it is unpacked, and the period for which the base station remains powered-off during maintenance must not exceed 24 hours.

Context

NOTE

When transporting, moving, or installing the equipment, components, or parts, you must:

- Prevent them from colliding with doors, walls, shelves, or other objects.
- Wear clean gloves, and avoid touching the equipment, components, or parts with bare hands, sweat-soaked gloves, or dirty gloves.

Procedure

Step 1 Check the total number of articles in each case according to the packing list.

If ...	Then ...
The total number tallies with the packing list	Go to **Step 2**.
The total number does not tally with the packing list	Find out the cause and report any missing articles to the local Huawei office.

Step 2 Check the exterior of the packing case.

Copyright © Huawei Technologies Co., Ltd.

If ...	Then ...
The outer packing is intact	Go to **Step 3**.
The outer packing is severely damaged or soaked	Find out the cause and report it to the local Huawei office.

Step 3 Check the type and quantity of the equipment in the cases according to the packing list.

If ...	Then ...
Types and quantity of the article tally with those on the packing list	Sign the *Packing List* with the customer.
There is any shipment shortage or wrong shipment	Fill in and submit the *Cargo Shortage and Mishandling Report*.
Articles are damaged.	Fill in and submit the *Article Replacement Report*.

NOTICE

To protect the equipment and prevent damage to the equipment, you are advised to keep the unpacked equipment and packing materials indoors, take photos of the stocking environment, packing case or carton, packing materials, and any rusted or eroded equipment, and then file the photos.

----End

Copyright © Huawei Technologies Co., Ltd.

5 Obtaining the ESN

The Electronic Serial Number (ESN) is a unique identifier of a device. It is used during base station commissioning. Therefore, record the ESN before installing the BTS3902E.There are two types of the BTS3902E. This document uses one type as the example to describe.

Procedure

Step 1 Use an M4 Phillips screwdriver to loosen the two captive screws from the upper housing, as shown in **Figure 5-1**.

Figure 5-1 Loosening the screws from the housing

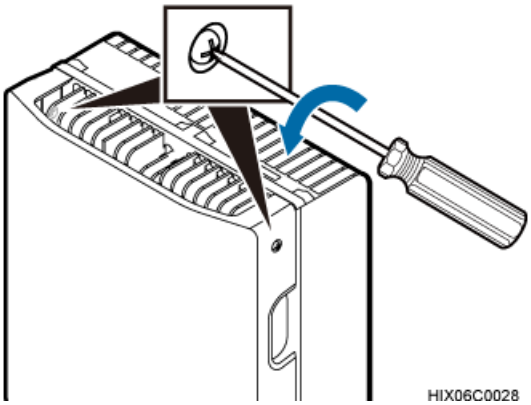

Step 2 Move the upper housing until it is stopped, as shown in **Figure 5-2**.

Copyright © Huawei Technologies Co., Ltd.

Figure 5-2 Moving the upper housing

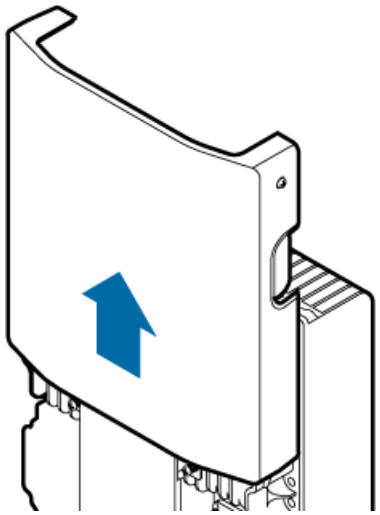

Step 3 Record the ESN on the BTS3902E.

The ESN is printed on the label and on the BTS3902E. You need to take the label with the site information, as shown in **Figure 5-3**.

Figure 5-3 Obtaining the ESN

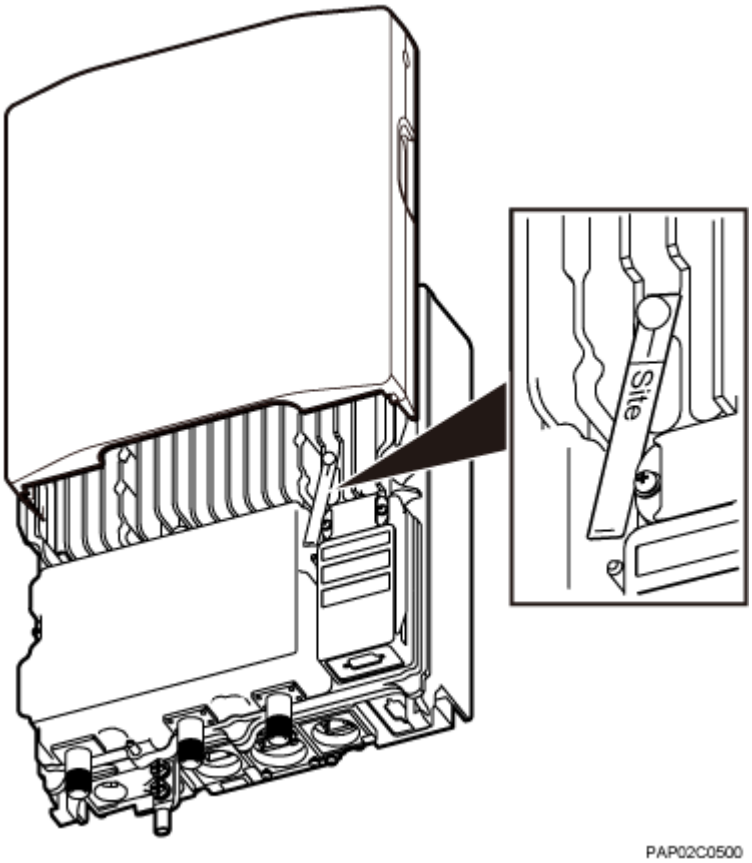

Copyright © Huawei Technologies Co., Ltd.

Step 4 Report the ESN to the engineer for the commissioning of the base station.

Step 5 Close the housing according to the instructions in **11.2 Installing the Upper Housing**.

----End

Copyright © Huawei Technologies Co., Ltd.

6 Installation Process

This chapter describes the procedures for installing the BTS3902E. The procedures involve installing a BTS3902E, installing BTS3902E cables, checking the BTS3902E hardware installation, and powering on the BTS3902E.

Figure 6-1 shows the installation procedure.

NOTE

If you conduct a power-on check on the cabinet, you can install the housing after the power-on check is complete. The following figure shows the procedures in which checking the power-on status is after installing the housing.

Copyright © Huawei Technologies Co., Ltd.

Figure 6-1 Process of installing a BTS3902E

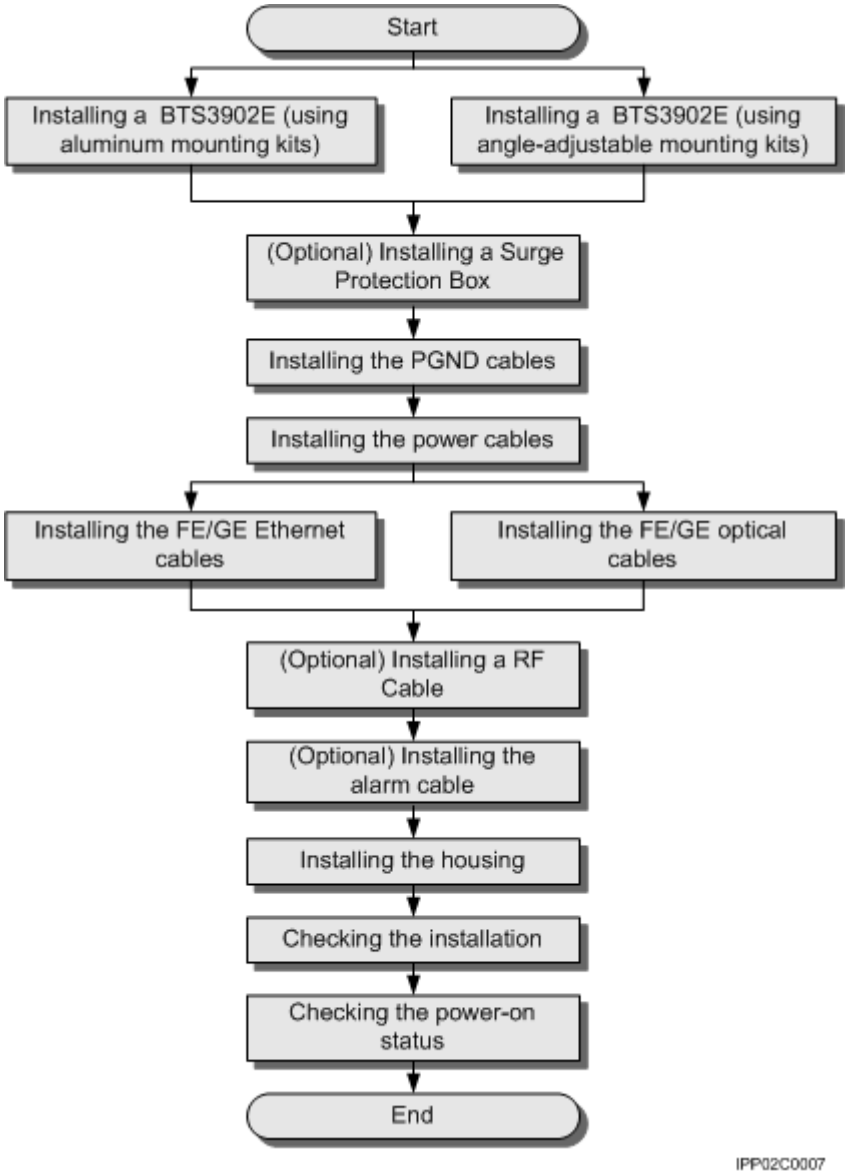

Copyright © Huawei Technologies Co., Ltd.

7 Installing a BTS3902E (using aluminum mounting kits)

About This Chapter

This chapter describes the procedure for installing a BTS3902E with an external antenna, when an aluminum mounting kit is used. The BTS3902E can be installed on a metal pole, wall, wood pole, or IFS06 in different scenarios.

7.1 Installing a BTS3902E on a Pole with the Diameter of 60 mm to 114 mm (2.36 in. to 4.49 in.)
This section describes the procedure and precautions for installing a BTS3902E on a pole with the diameter of 60 mm to 114 mm (2.36 in. to 4.49 in.).

7.2 Installing a BTS3902E on a Pole with the Diameter of 114 mm to 400 mm (4.49 in. to 15.75 in.)
This section describes the procedure and precautions for installing a BTS3902E on a pole with the diameter of 114 mm to 400 mm (4.49 in. to 15.75 in.).

7.3 Installing a BTS3902E on a Wall
This section describes the procedure and precautions for installing a BTS3902E on a wall.

7.4 Installing a BTS3902E on a Wood Pole with the Diameter of 200 mm to 400 mm (7.87 in. to 15.75 in.)
This section describes the procedure and precautions for installing a BTS3902E on a wood pole.

7.5 Installing BTS3902Es on an IFS06
This section describes the procedure and precautions for installing BTS3902Es on an IFS06.

Copyright © Huawei Technologies Co., Ltd.

7.1 Installing a BTS3902E on a Pole with the Diameter of 60 mm to 114 mm (2.36 in. to 4.49 in.)

This section describes the procedure and precautions for installing a BTS3902E on a pole with the diameter of 60 mm to 114 mm (2.36 in. to 4.49 in.).

Procedure

Step 1 Determine the position for installing the main mounting bracket.

Step 2 Fit one end of the auxiliary bracket to one double-headed nut assembly of the main bracket.

Step 3 Install the bracket assembly on the pole, and then fit the other end of the auxiliary bracket to the other double-headed nut assembly, as shown in **Figure 7-1**.

Figure 7-1 Installing the bracket assembly

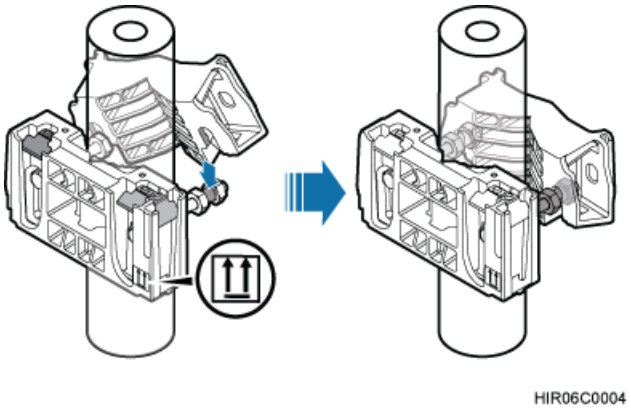

NOTE

Verify that the arrow on the main bracket is pointing up.

Step 4 Using a torque wrench, tighten the nuts to 40 N·m (354.03 lbf·in.) to secure the bracket assembly onto the pole, as shown in **Figure 7-2**.

NOTICE

Tighten the two double-headed nut assemblies alternatively. After the main and auxiliary brackets are secured properly, measure the spacing between the brackets on both sides and ensure that the spacing is the same on the two sides.

Copyright © Huawei Technologies Co., Ltd.

Figure 7-2 Securing the bracket assembly onto the pole

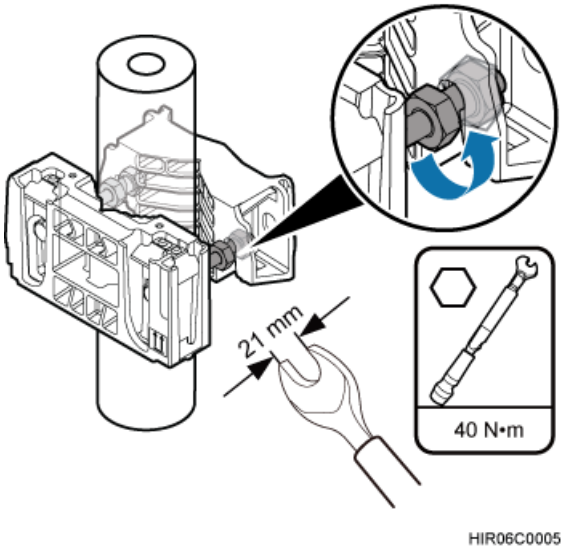

Step 5 Install the BTS3902E onto the main mounting bracket until the BTS3902E snaps shut, as shown in **Figure 7-3**.

Figure 7-3 Installing the BTS3902E onto the main mounting bracket

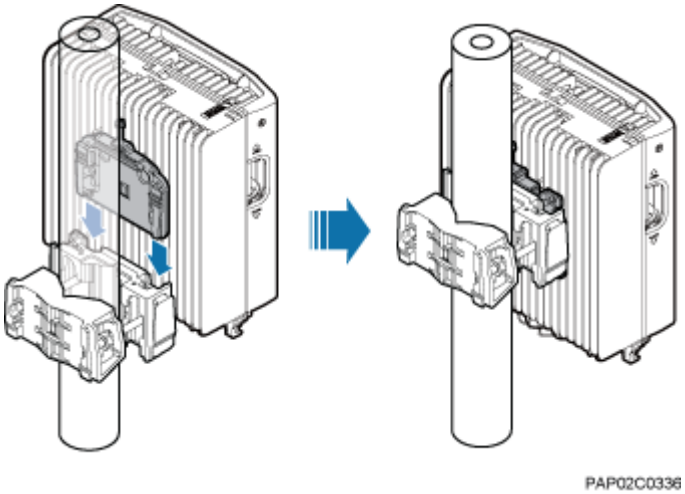

----End

7.2 Installing a BTS3902E on a Pole with the Diameter of 114 mm to 400 mm (4.49 in. to 15.75 in.)

This section describes the procedure and precautions for installing a BTS3902E on a pole with the diameter of 114 mm to 400 mm (4.49 in. to 15.75 in.).

Copyright © Huawei Technologies Co., Ltd.

Procedure

Step 1 Install an adapting plate both on the top and bottom of the main mounting bracket. Tighten two M6x14 screws to 5 N·m (44.25 lbf·in.) to secure each of the plates, as shown in **Figure 7-4**.

Figure 7-4 Installing the adapting plate assembly

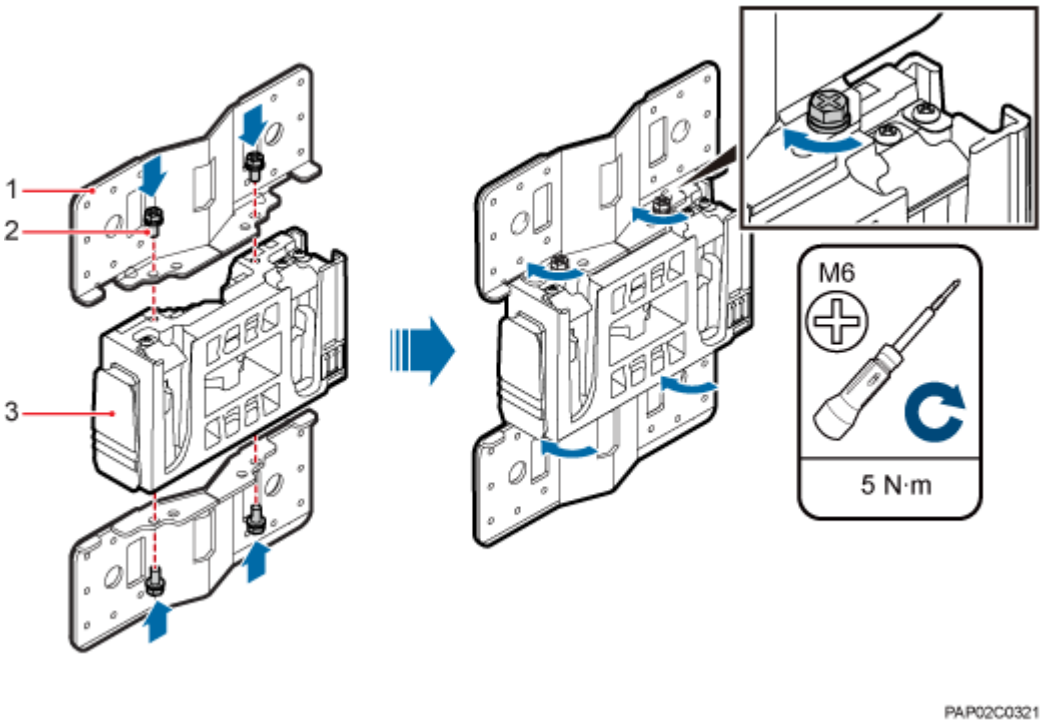

(1) Adapting plate (2) Screw (3) Main mounting bracket

Step 2 Install two hose clamps through the mounting hole group B on the adapting plates, as shown in **Figure 7-5**.

Copyright © Huawei Technologies Co., Ltd.

Figure 7-5 Installing the hose clamps through the mounting hole group B

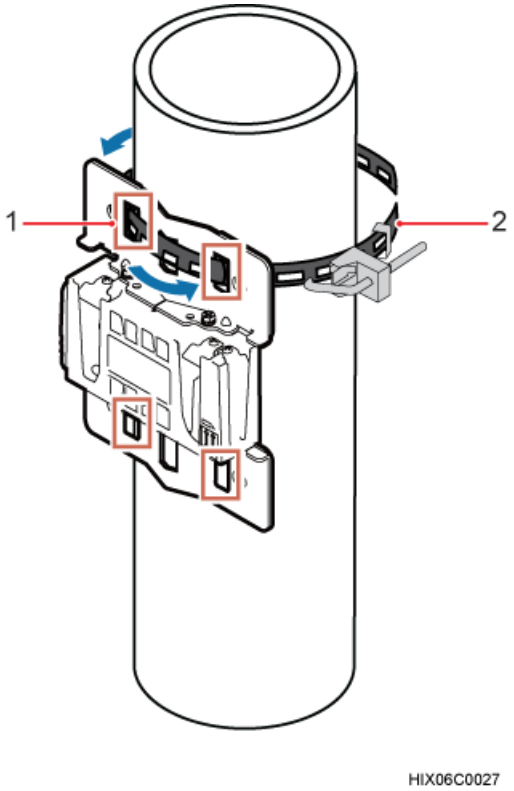

(1) Mounting hole group B (2) Hose clamp

Step 3 Install the mounting piece, as shown in **Figure 7-6**.

1. Tighten the M12 screws to 30 N·m (265.52 lbf·in.)
2. Use a level to check whether the adapting plate is on a horizontal plane.

NOTE

Secure the upper hose clamp before securing the lower clamp.

Copyright © Huawei Technologies Co., Ltd.

Figure 7-6 Securing the hose clamps

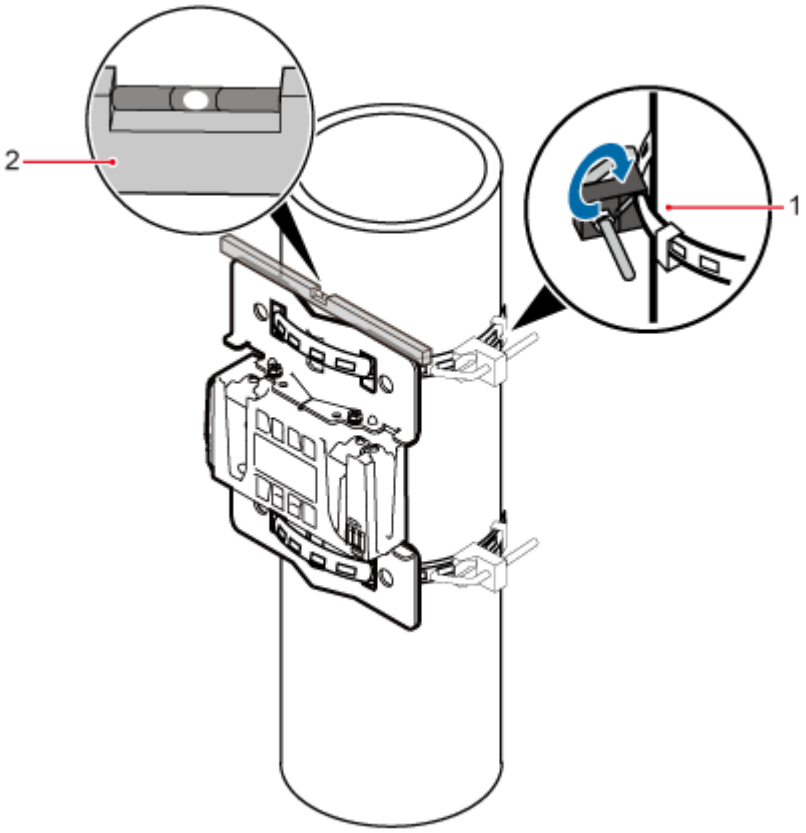

(1) Hose clamp (2) Level

Step 4 Install the BTS3902E onto the main mounting bracket until the BTS3902E snaps shut, as shown in **Figure 7-7**.

Figure 7-7 Installing the BTS3902E onto the main mounting bracket

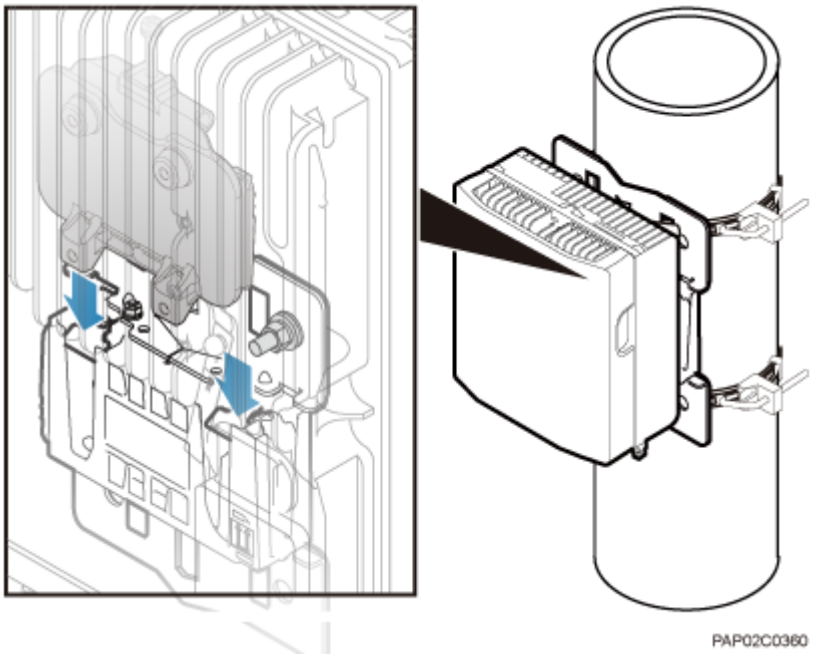

Copyright © Huawei Technologies Co., Ltd.

----End

7.3 Installing a BTS3902E on a Wall

This section describes the procedure and precautions for installing a BTS3902E on a wall.

Context

NOTICE

You must use adjustable torque tools to tighten all the screws and nuts to the required torque described in this document.

Procedure

Step 1 Install an adapting plate both on the top and bottom of the main mounting bracket. Tighten two M6x14 screws to 5 N·m (44.25 lbf·in.) to secure each of the plates, as shown in **Figure 7-8**.

Figure 7-8 Installing the adapting plate assembly

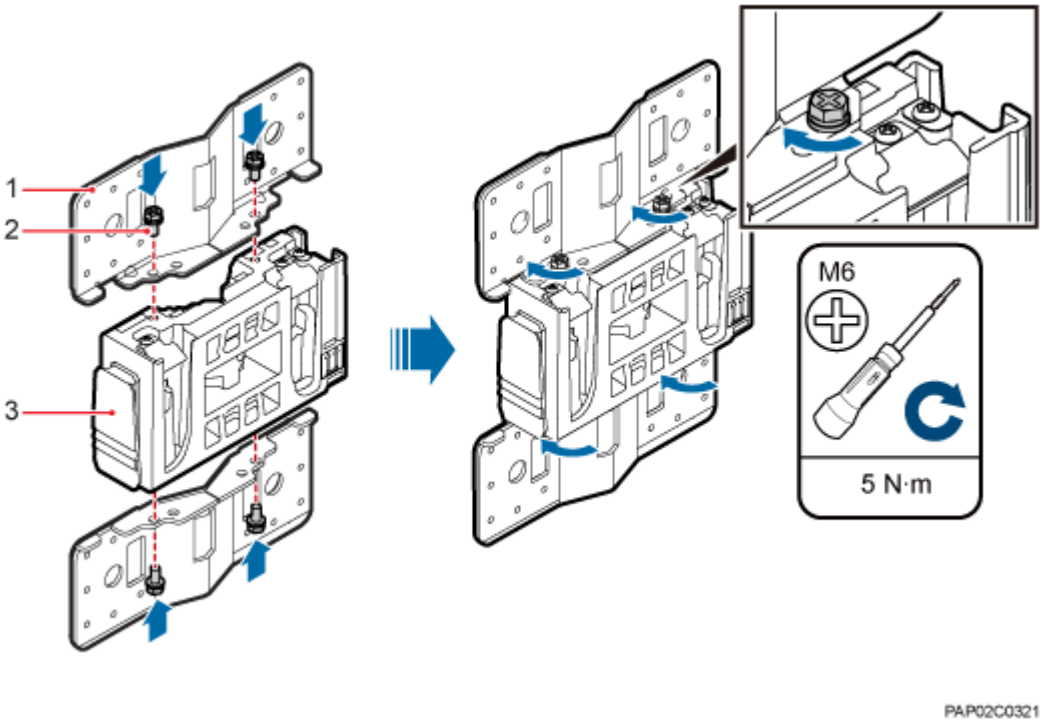

(1) Adapting plate (2) Screw (3) Main mounting bracket

Step 2 Place the adapting plates against the wall, use a level to verify that the plates are horizontal, and then use a marker to mark anchor points, as shown in **Figure 7-9**.

Copyright © Huawei Technologies Co., Ltd.

Figure 7-9 Marking anchor points

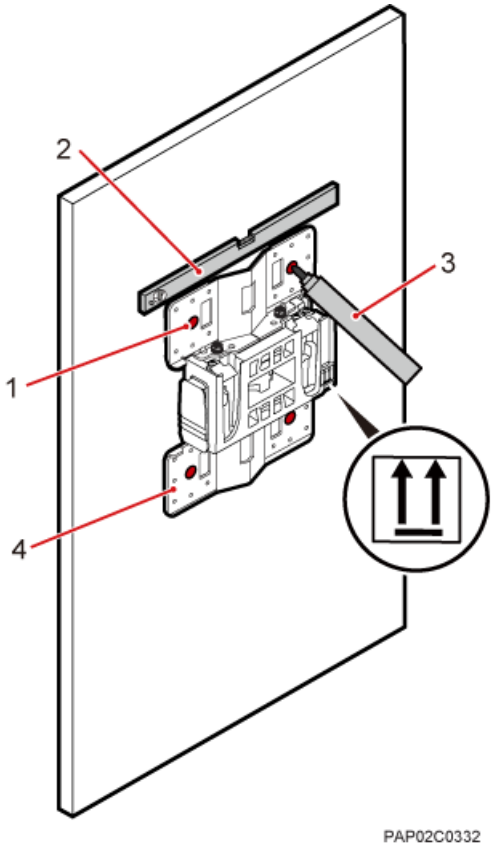

(1) Mounting hole group A (2) Level (3) Marker (4) Adapting plate

CAUTION

To prevent inhalation or eye contact with dust, take adequate preventive measures when drilling holes.

Step 3 Drill holes at the anchor points, and then install expansion bolt assemblies, as shown in **Figure 7-10**.

Copyright © Huawei Technologies Co., Ltd.

Figure 7-10 Drilling holes and install expansion bolt assemblies

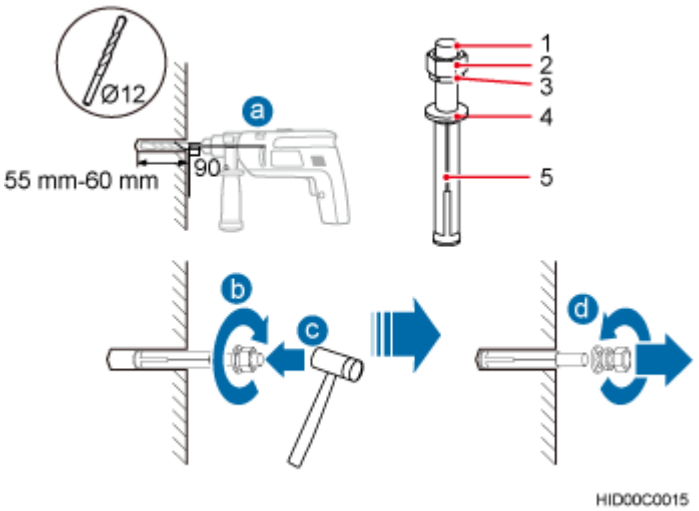

(1) M10x80 bolt (2) Nut (3) Spring washer (4) Flat washer (5) Expansion tube

1. Use a hammer drill with a φ12 bit to drill holes perpendicularly with the wall at the marked anchor points. Ensure that the depth of each hole ranges from 55 mm to 60 mm (2.17 in. to 2.36 in.) and each hole is of the same depth.
2. Use a vacuum cleaner to clear dust inside and around the holes, and then measure the inter-hole spacing. If the spacing is too wide or too narrow, drill holes again.
3. Tighten each expansion bolt slightly and place them perpendicularly into each hole.
4. Hit each expansion bolt using a rubber mallet to enable the expansion tube to enter the hole completely.
5. Remove the M10x80 bolt, nut, spring washer, and flat washer from each expansion bolt assembly in sequence.

NOTICE

After dismantling an expansion bolt assembly, ensure that the top of the expansion tube is on the same level as the wall. Otherwise, the device cannot be installed on the wall evenly and securely.

Step 4 Fit the mounting piece on the expansion bolt, and then use a combination wrench (with a size of 17 mm or 0.67 in.) to tighten the expansion bolts to 25 N·m (265.52 lbf·in.), as shown in **Figure 7-11**.

NOTICE

Ensure that the arrow on the main mounting bracket points upwards when installing the mounting piece.

Copyright © Huawei Technologies Co., Ltd.

Figure 7-11 Fitting the mounting piece onto the expansion bolts

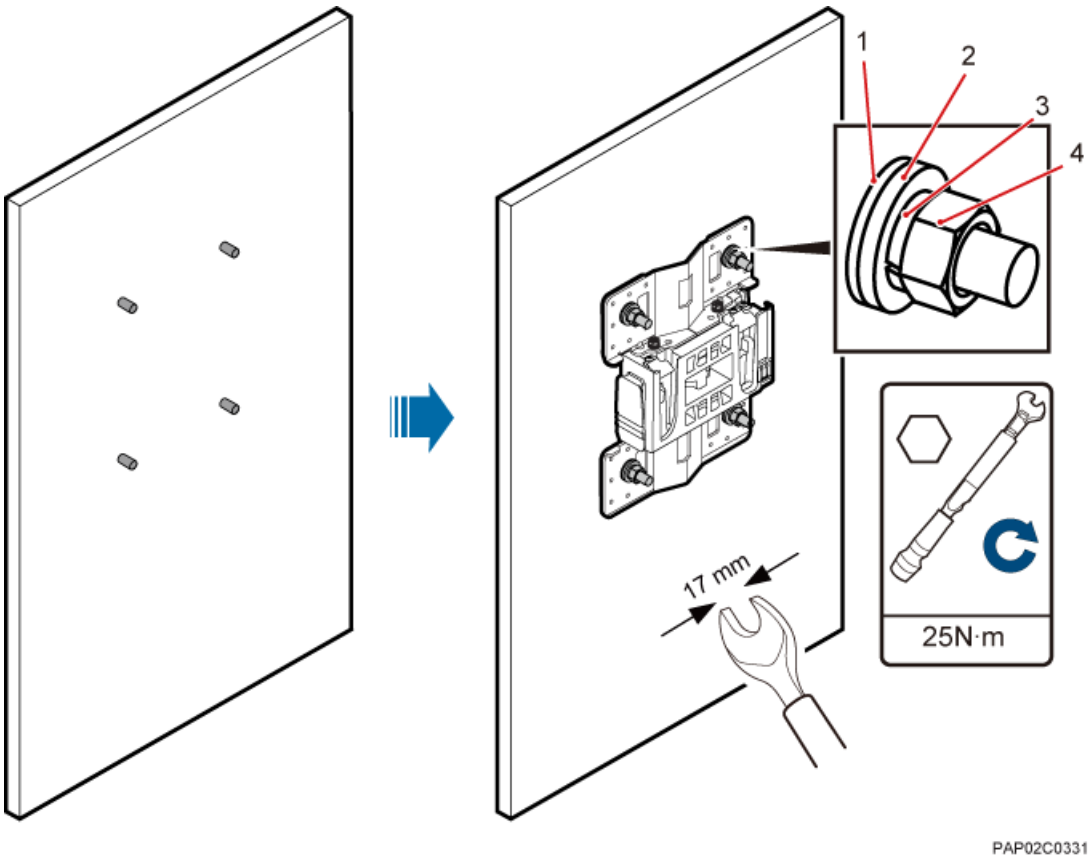

(1) Insulation washer (2) Flat washer (3) Spring washer (4) Nut

Step 5 Install the BTS3902E onto the main mounting bracket until the BTS3902E snaps shut, as shown in **Figure 7-12**.

Copyright © Huawei Technologies Co., Ltd.

Figure 7-12 Installing the BTS3902E onto the main mounting bracket

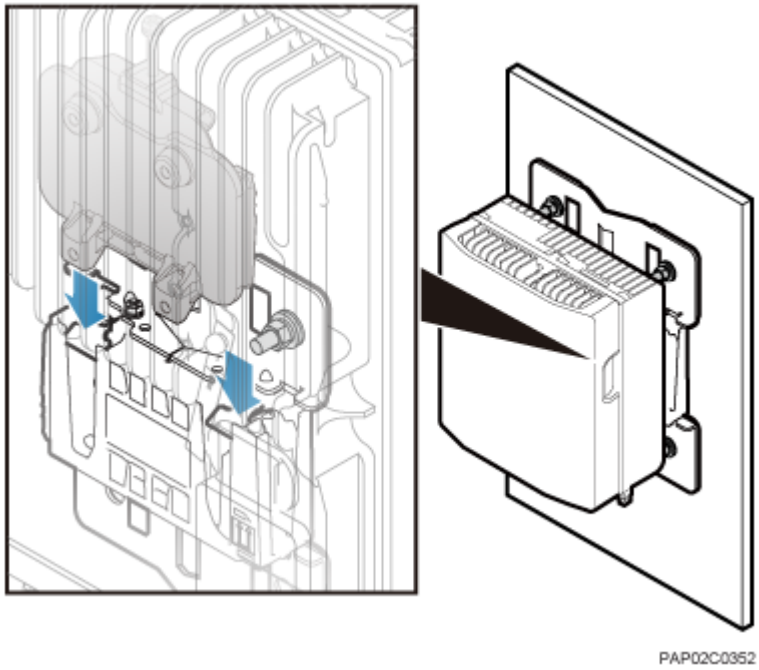

----End

7.4 Installing a BTS3902E on a Wood Pole with the Diameter of 200 mm to 400 mm (7.87 in. to 15.75 in.)

This section describes the procedure and precautions for installing a BTS3902E on a wood pole.

Procedure

Step 1 Drill two holes with the diameter of 18 mm (0.71 in.) on the middle axis of the wood pole, ensuring that the inter-hole spacing is 203 mm (7.99 in.), as shown in **Figure 7-13**.

Copyright © Huawei Technologies Co., Ltd.

Figure 7-13 Drilling holes

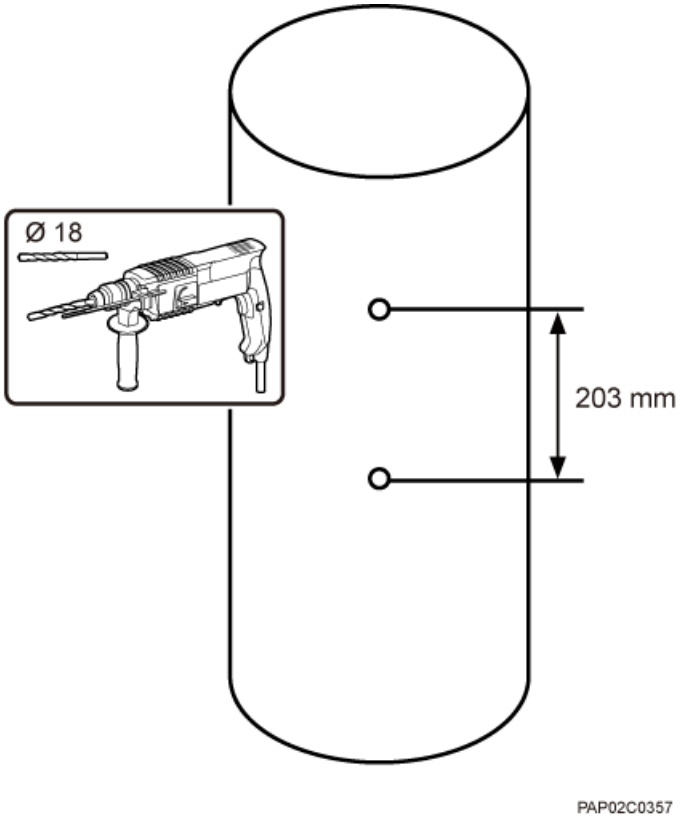

Step 2 Install an adapting plate both on the top and bottom of the main mounting bracket. Tighten two M6x14 screws to 5 N·m (44.25 lbf·in.) to secure each of the plates, as shown in **Figure 7-14**.

Copyright © Huawei Technologies Co., Ltd.

Figure 7-14 Installing the adapting plate assembly

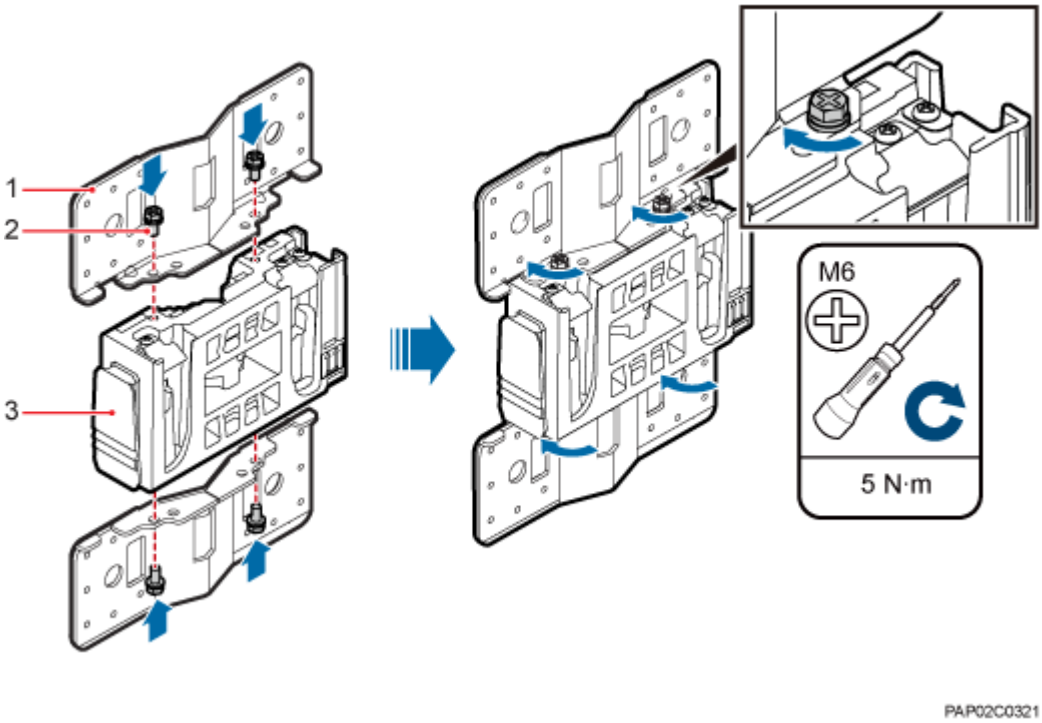

(1) Adapting plate (2) Screw (3) Main mounting bracket

Step 3 Install the securing piece, as shown in **Figure 7-15**.

1. Align the mounting hole group C with the mounting holes in the wood pole.
2. Lead the two long M16 bolts with spacers through the upper and lower mounting holes.

Copyright © Huawei Technologies Co., Ltd.

Figure 7-15 Securing the securing pieces

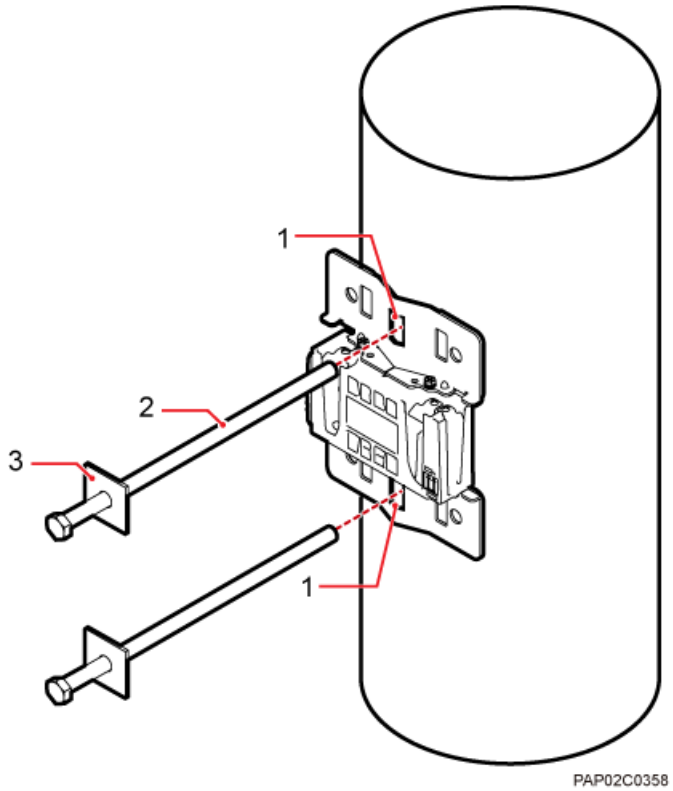

(1) Mounting hole group C (2) Bolt (3) Spacer

Step 4 Tighten the nuts to 80 N·m (708.06 lbf·in.), as shown in **Figure 7-16**.

Copyright © Huawei Technologies Co., Ltd.

Figure 7-16 Tightening nuts

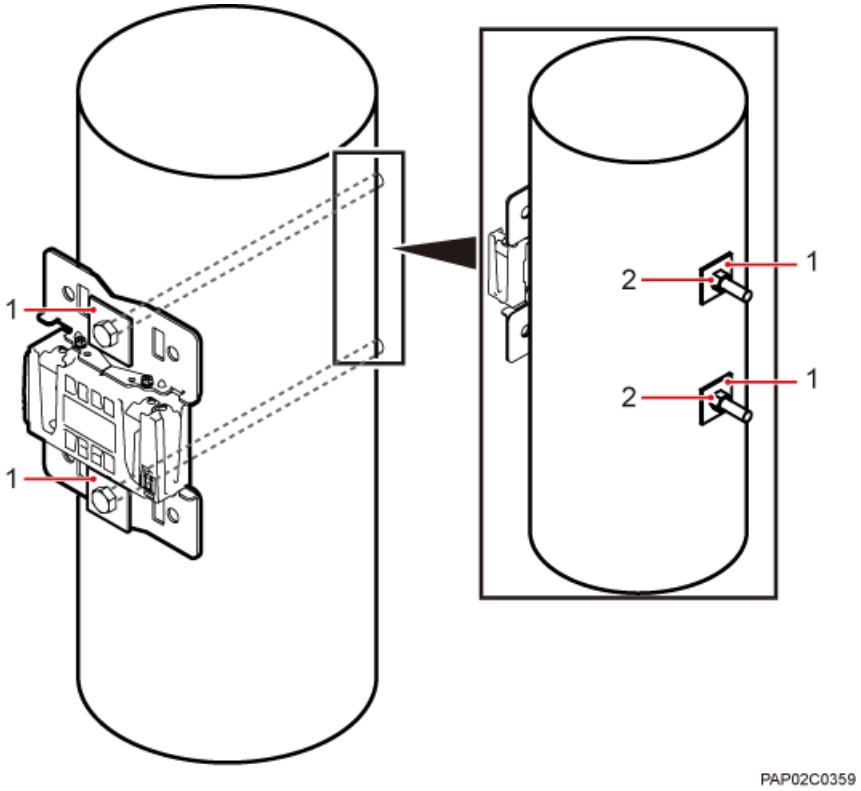

(1) Spacer (2) Nut

Step 5 Install the BTS3902E on the main mounting bracket until the BTS3902E snaps shut, as shown in **Figure 7-17**.

Copyright © Huawei Technologies Co., Ltd.

Figure 7-17 Installing the BTS3902E on the main mounting bracket

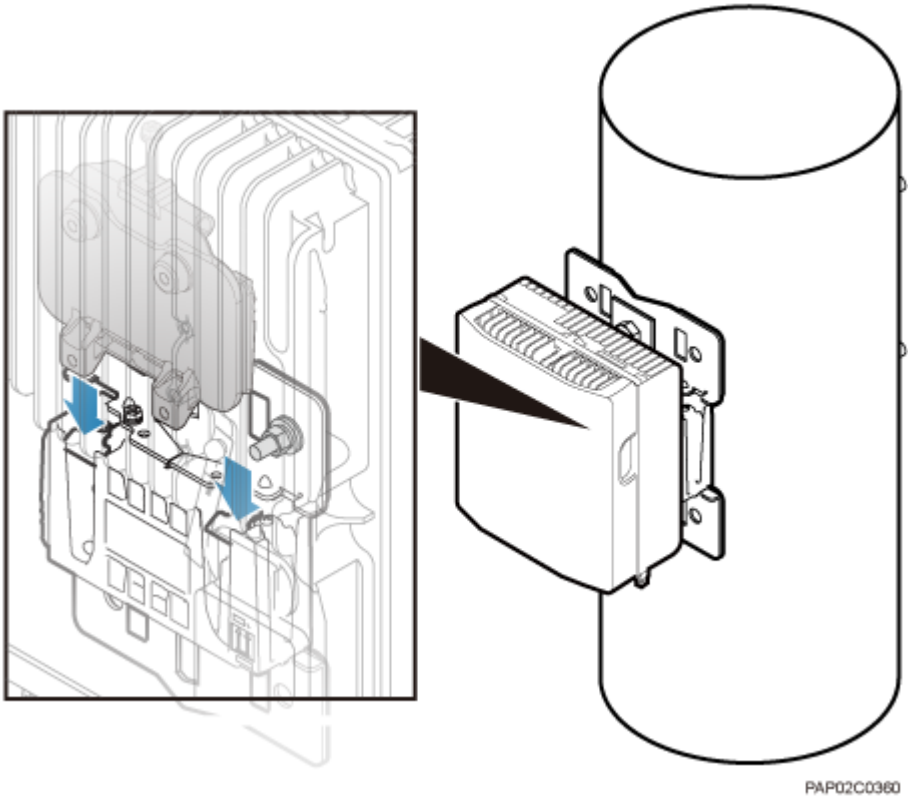

----End

7.5 Installing BTS3902Es on an IFS06

This section describes the procedure and precautions for installing BTS3902Es on an IFS06.

7.5.1 Assembling the IFS06

This section describes the procedure for assembling an IFS06.

Procedure

Step 1 Use four M12×30 bolt assemblies to secure rear feet to the main frame, with a torque of 50 N·m (442.54 lbf·in.), as shown in **Figure 7-18**.

NOTE

Place a foam pad or cardboard under the IFS06 to prevent any damage to the paint.

Copyright © Huawei Technologies Co., Ltd.

Figure 7-18 Installing the rear feet

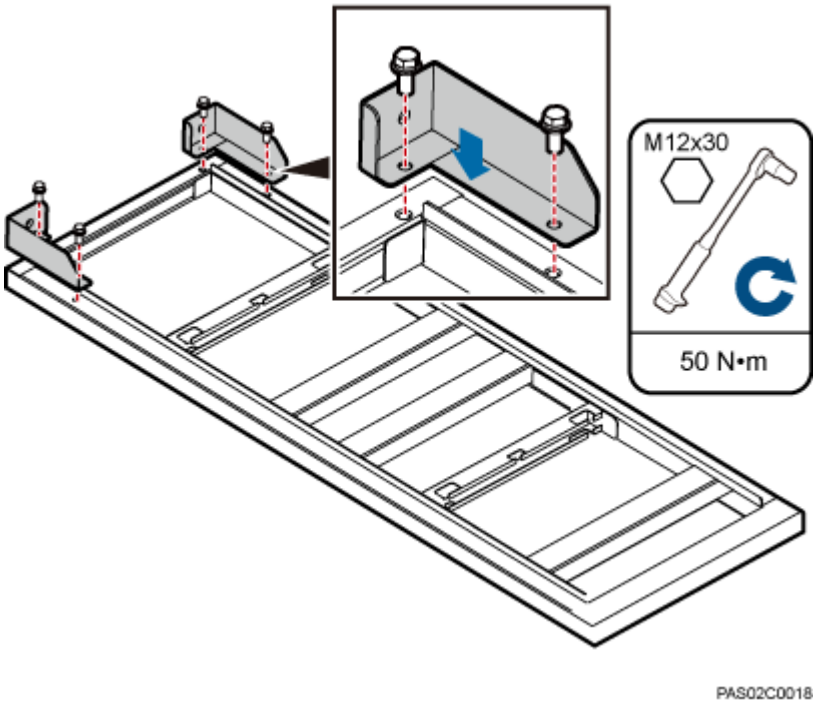

Step 2 Turn over the IFS06 and use six M12×30 bolt assemblies to secure front feet to the main frame, with a torque of 50 N·m (442.54 lbf·in.), as shown in **Figure 7-19**.

Figure 7-19 Installing the front feet

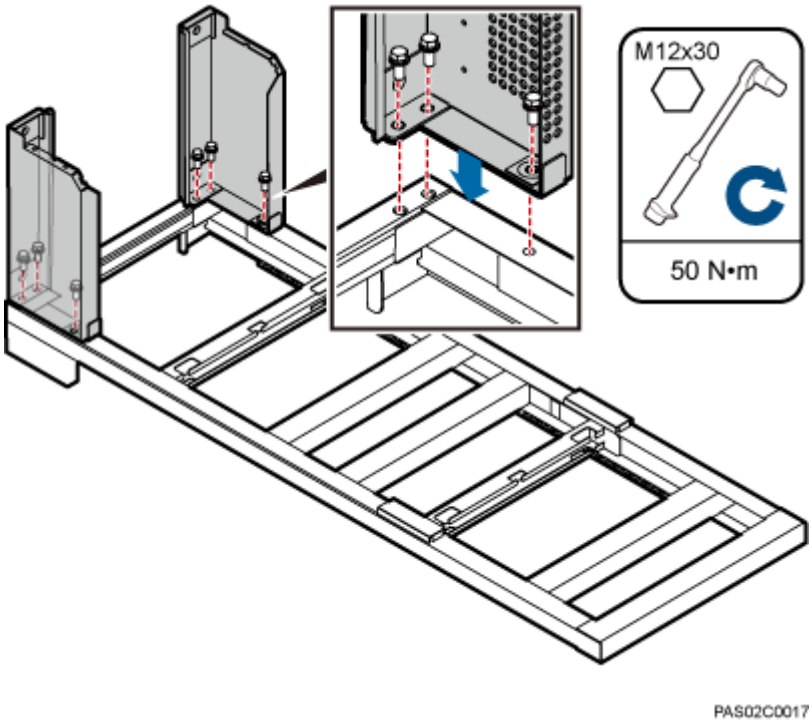

Copyright © Huawei Technologies Co., Ltd.

Step 3 In height-restricted scenarios, move the adjustable beams from the positions marked 2 m (6.56 ft) to the positions marked 1.8 m (5.91 ft), as shown in **Figure 7-20**.

NOTE

The adjustable beams do not need to be moved in height-unrestricted scenarios.

Figure 7-20 Moving the adjustable beam

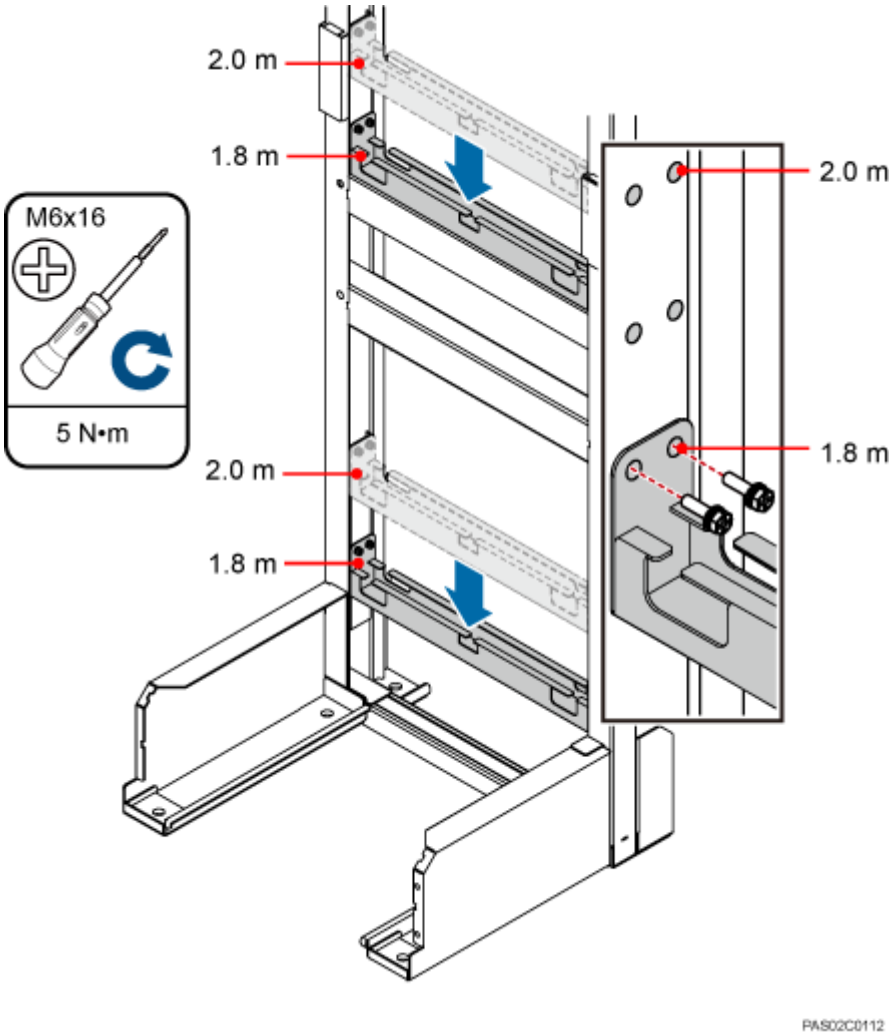

Step 4 Fit the tabs of the cable tray into the corresponding slots on the columns of the IFS06, as shown in **Figure 7-21**. Tighten the four M4 screws to 0.6 N·m (5.31 lbf·in.)

Figure 7-21 Installing cable trays

NOTE

In the height-unrestricted scenario, fit the tabs of the cable tray into the slots for the height-unrestricted scenario. In the height-restricted scenario, fit the tabs of the cable tray into the slots for the height-restricted scenario.

Copyright © Huawei Technologies Co., Ltd.

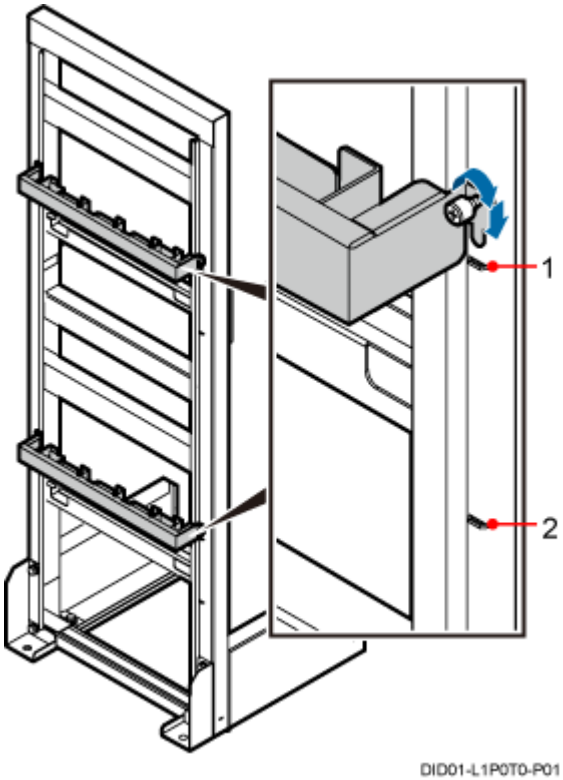

(1) Position for installing the cable tray in the height-unrestricted scenario

(2) Position for installing the cable tray in the height-restricted scenario

----End

7.5.2 Installing the IFS06

This section describes the procedures for installing the IFS06 on the concrete floor and ESD floor.

7.5.2.1 Installing the IFS06 on the Concrete Floor

This section describes the procedure for installing the IFS06 on the concrete floor.

Procedure

Step 1 Place the marking-off template on the floor. Then use a marker to mark four anchor points, as shown in **Figure 7-22**.

Copyright © Huawei Technologies Co., Ltd.

Figure 7-22 Marking anchor points

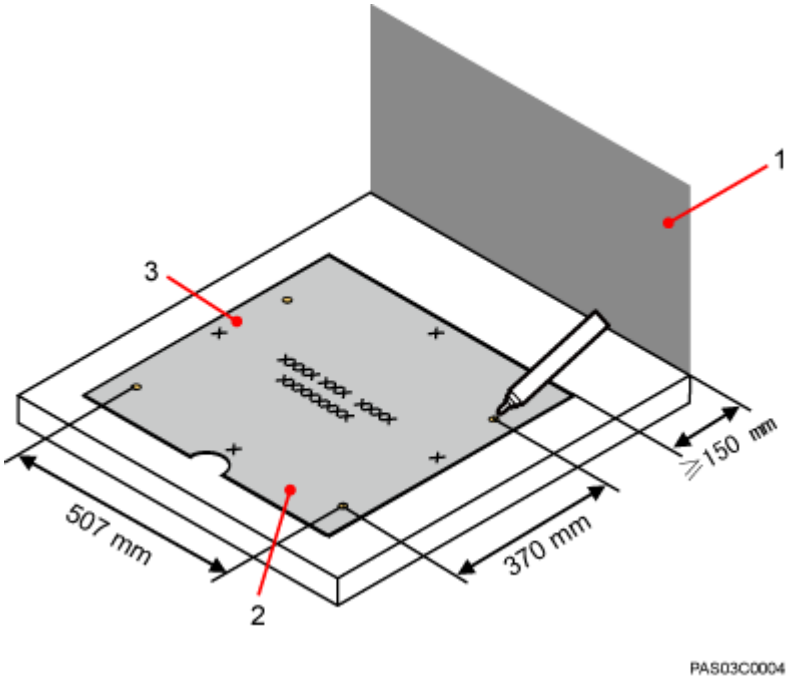

(1) Wall (2) Front (3) Left

CAUTION

Take proper safety measures to protect your eyes and respiratory tract against the dust before drilling holes.

Step 2 Drill holes at the anchor points and install expansion bolts in the holes, as shown in **Figure 7-23**.

1. Use a hammer drill with a Φ16 drill bit to drill holes with a depth ranging from 52 mm (2.05 in.) to 60 mm (2.36 in.). Then, use a vacuum cleaner to clear the dust out from inside and around all the holes, and measure the distances between holes. If any hole does not meet the requirements, mark new anchor points and drill new holes.
2. Partially tighten an expansion bolt and place it vertically into a hole. Use a rubber mallet to hit the expansion bolt until the expansion tube completely enters the hole.
3. Tighten the bolts.
4. Remove the bolts, spring washers, and flat washers by turning them counterclockwise.

NOTICE

After dismantling the expansion bolt assembly, ensure that the top of the expansion tube is level with the concrete pad. Otherwise, the cabinet cannot be installed on the concrete pad evenly and securely.

Copyright © Huawei Technologies Co., Ltd.

Figure 7-23 Drilling a hole and installing an expansion bolt assembly

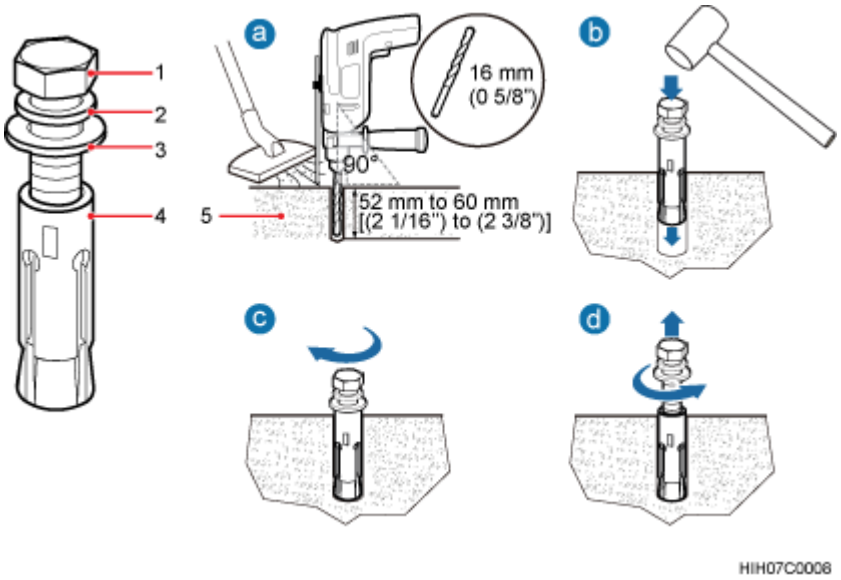

(1) M12 expansion bolt (2) Spring washer (3) Flat washer (4) Expansion tube

Step 3 Place the IFS06, as shown in **Figure 7-24**.

1. Place the IFS06, with the mounting holes on the IFS06 aligned with the anchor points on the floor.
2. Lead each bolt through the spring washer, flat washer, and insulation washer in sequence. Then install the bolts in the mounting holes on the IFS06.
3. Partially tighten the bolts into the expansion tubes.

Figure 7-24 Installing the bolts

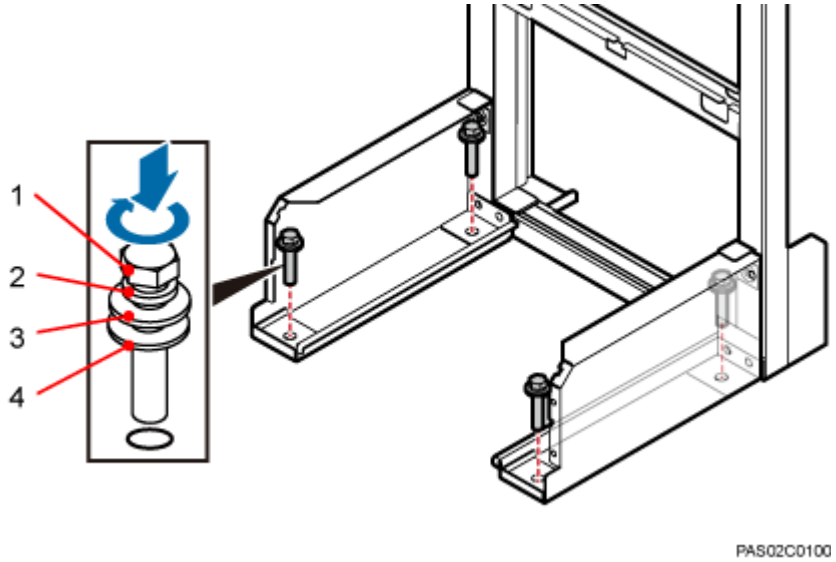

(1) M12x60 bolt (2) Spring washer (3) Flat washer (4) Insulation washer

Step 4 Use a level to measure all sides of the frame and use spacers to level the frame if necessary, as shown in **Figure 7-25**.

Copyright © Huawei Technologies Co., Ltd.

NOTE

Spacers must be added at the positions where the expansion bolt assemblies are installed.

Figure 7-25 Checking and leveling the IFS06

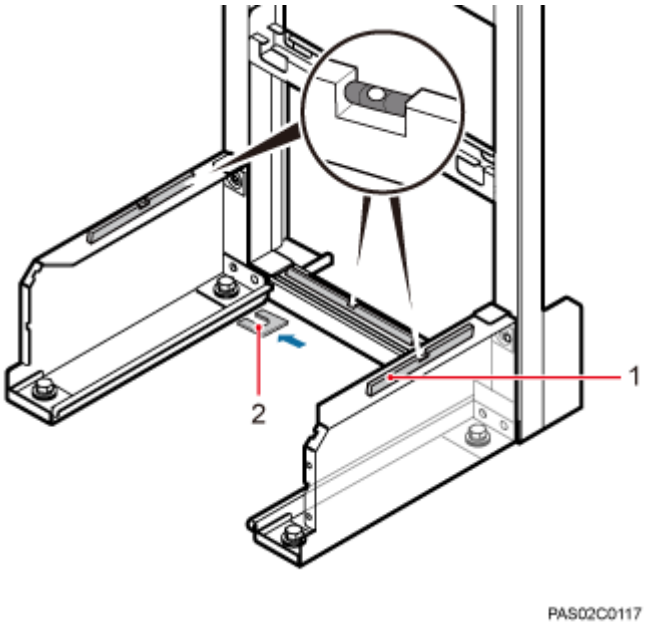

(1) Level (2) Spacer

Step 5 Use a socket wrench to tighten the bolts to 50 N·m (442.54 lbf·in.), as shown in **Figure 7-26**.

Figure 7-26 Tightening the bolts

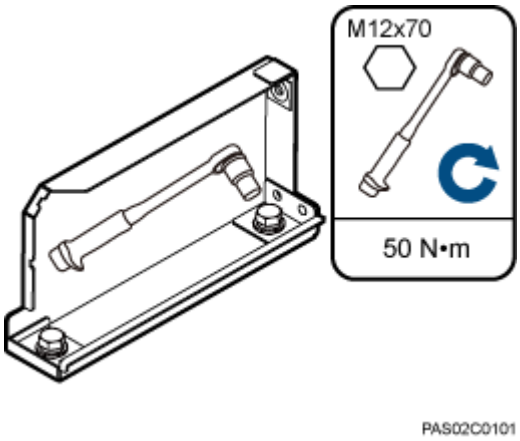

----End

7.5.2.2 Installing the IFS06 on the ESD Floor

This section describes the procedure for installing the IFS06 on the ESD floor.

Copyright © Huawei Technologies Co., Ltd.

Context

Figure 7-27 shows a support for installing the ESD floor. Such a support can have either an adjustable height (I) or fixed height (II). The same procedure is used for installing the two types of supports. This section uses type I as an example.

Figure 7-27 Support for installing the ESD floor

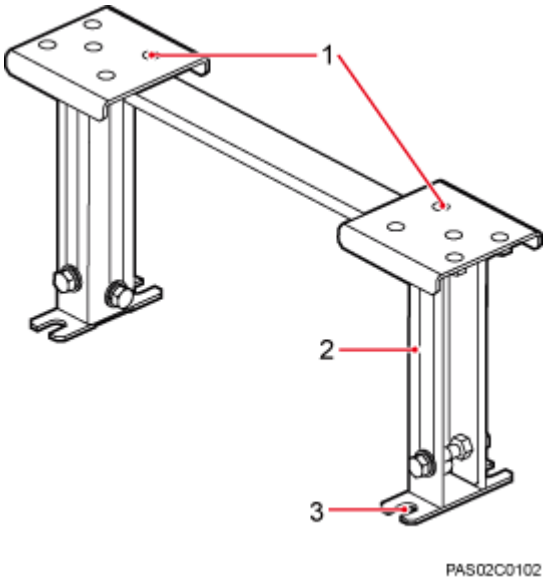

(1) Mounting holes for the ESD floor (2) Support (3) Mounting hole for the concrete floor

The height of an ESD floor is the spacing between the concrete floor and the upper surface of the ESD floor.

Type	Height of the ESD Floor
I	296 mm (11.65 in.) to 495 mm (19.49 in.)
II	At least 120 mm (4.72 in.), depending on the actual floor height

Procedure

Step 1 Place the marking-off template on the ESD floor. Then use a marker to mark four anchor points, as shown in Figure 7-28.

Copyright © Huawei Technologies Co., Ltd.

Figure 7-28 Marking anchor points

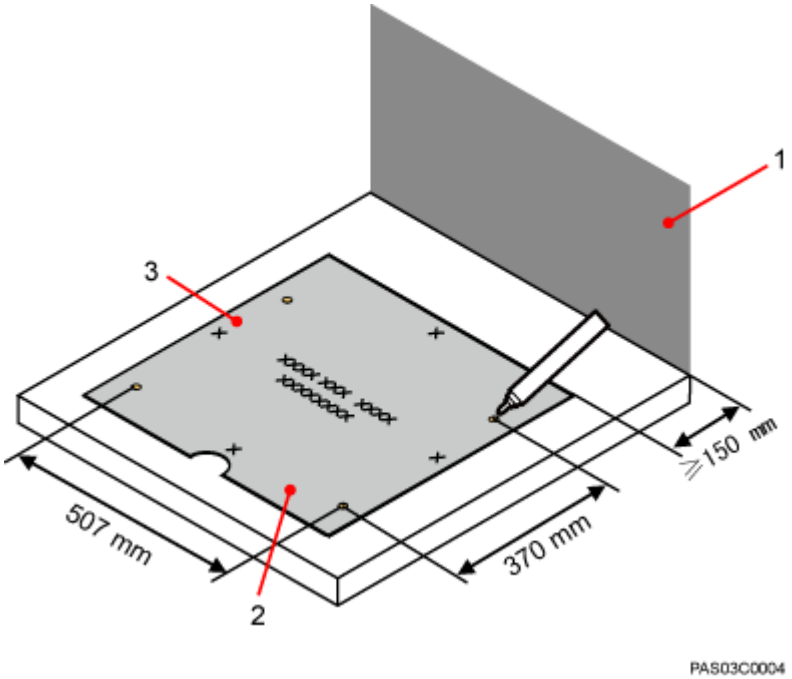

(1) Wall (2) Front (3) Left

Step 2 Drill holes on the ESD floor, as shown in **Figure 7-29**. Ensure that the hammer drill penetrates the ESD floor.

NOTE

Use a vacuum cleaner to clear the dust out from inside and around all the holes, and measure the distances between holes. If any hole does not meet the requirements, mark new anchor points and drill new holes.

Figure 7-29 Drilling holes

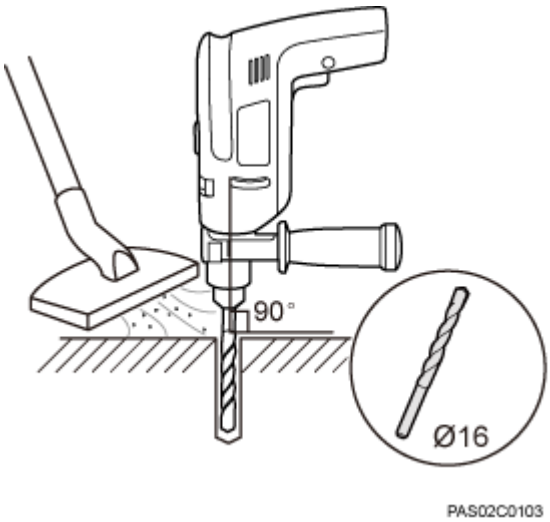

Copyright © Huawei Technologies Co., Ltd.

Step 3 Drill holes on the concrete floor, as shown in **Figure 7-30**.

1. Place the support under the ESD floor, and use M12x70 bolts to fix the ESD floor to the support temporarily.
2. According to the support's mounting hole for the concrete floor, use a marker to mark the positions for installing expansion bolts.
3. Use a measuring tape to measure the inter-hole spacing, and ensure that the center-to-center separations of the holes are consistent.

Figure 7-30 Marking holes on the concrete floor

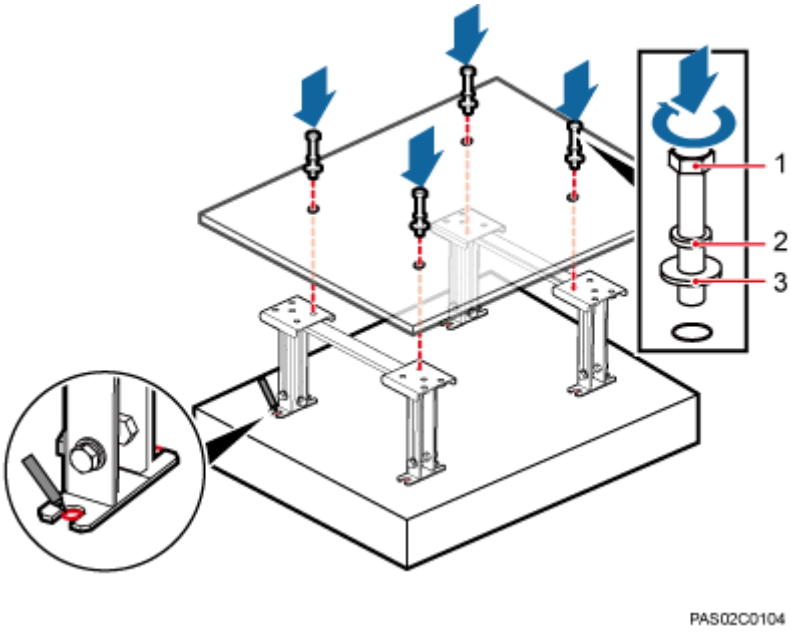

(1) M12x70 bolt (2) Spring washer 12 (3) Flat washer 12

CAUTION

Take proper safety measures to protect your eyes and respiratory tract against the dust before drilling holes.

Step 4 Drill holes at the anchor points on the concrete floor. Then install the expansion bolt assembly, as shown in **Figure 7-31**.

1. Use a hammer drill with a Φ16 drill bit to drill holes with a depth ranging from 52 mm (2.05 in.) to 60 mm (2.36 in.). Then, use a vacuum cleaner to clear the dust out from inside and around all the holes, and measure the distances between holes. If any hole does not meet the requirements, mark new anchor points and drill new holes.
2. Partially tighten an expansion bolt and place it vertically into a hole. Use a rubber mallet to hit the expansion bolt until the expansion tube completely enters the hole.
3. Tighten the bolts.

Copyright © Huawei Technologies Co., Ltd.

4. Remove the bolts, spring washers, and flat washers by turning them counterclockwise.

NOTICE

After dismantling the expansion bolt assembly, ensure that the top of the expansion tube is level with the concrete pad. Otherwise, the cabinet cannot be installed on the concrete pad evenly and securely.

Figure 7-31 Drilling a hole and installing an expansion bolt assembly

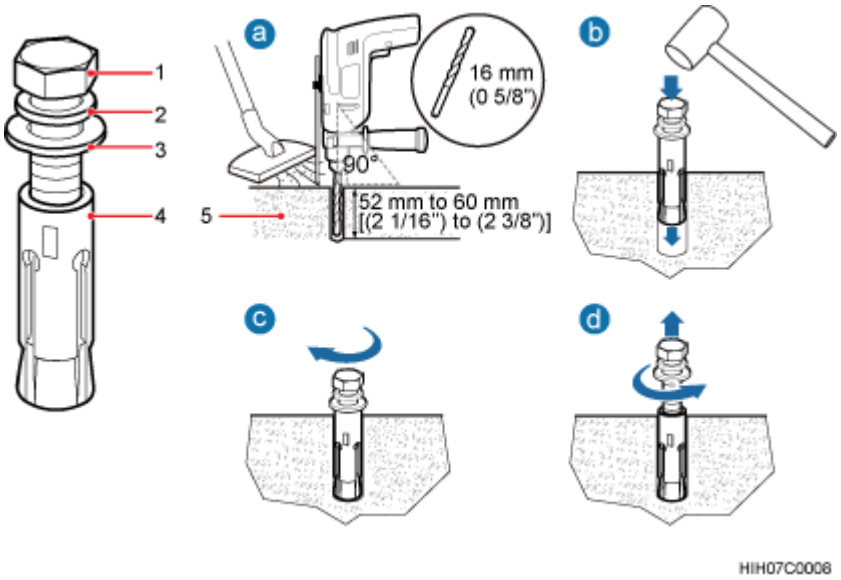

(1) M12 expansion bolt (2) Spring washer (3) Flat washer (4) Expansion tube

Step 5 Use M12x60 bolts, spring washers, and flat washers to secure the support for installing the ESD floor on the concrete floor. Tighten the bolts to 50 N·m (442.54 lbf·in.). **Figure 7-32** shows how to secure the support for installing the ESD floor.

Copyright © Huawei Technologies Co., Ltd.

Figure 7-32 Installing supports

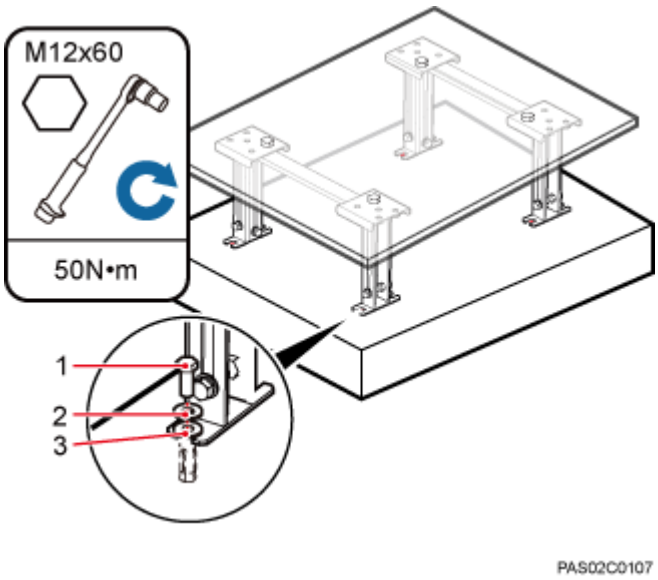

Step 6 Remove the bolts that are used to temporarily secure the support, as shown in **Figure 7-33**.

Figure 7-33 Removing bolts

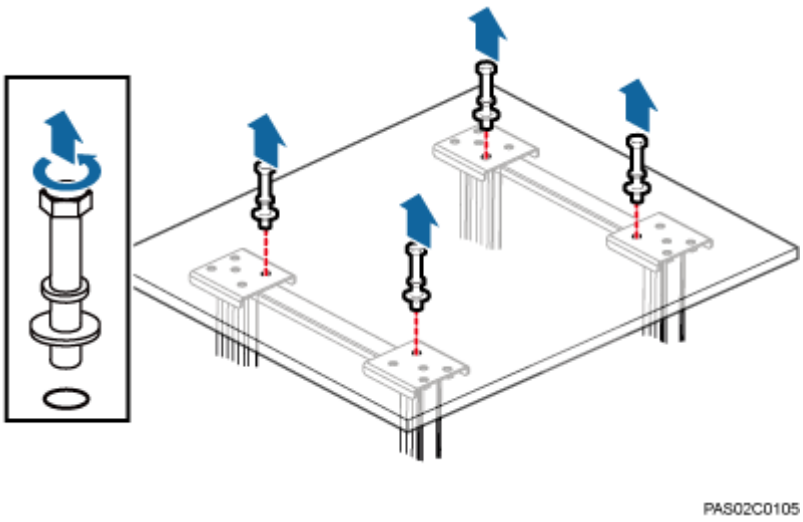

Step 7 Install the IFS06 to the ESD floor, without tightening the bolts, as shown in **Figure 7-34**.

Copyright © Huawei Technologies Co., Ltd.

Figure 7-34 Installing the bolts

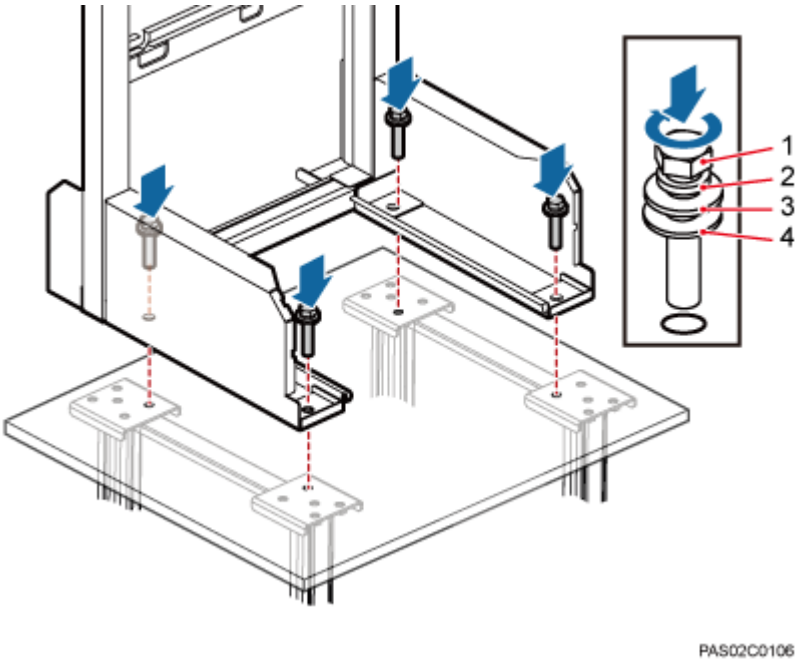

(1) M12x70 bolt (2) Spring washer (3) Flat washer (4) Insulation washer

Step 8 Use a level to measure all sides of the frame and use spacers to level the frame if necessary, as shown in **Figure 7-35**.

Figure 7-35 Checking and leveling the IFS06

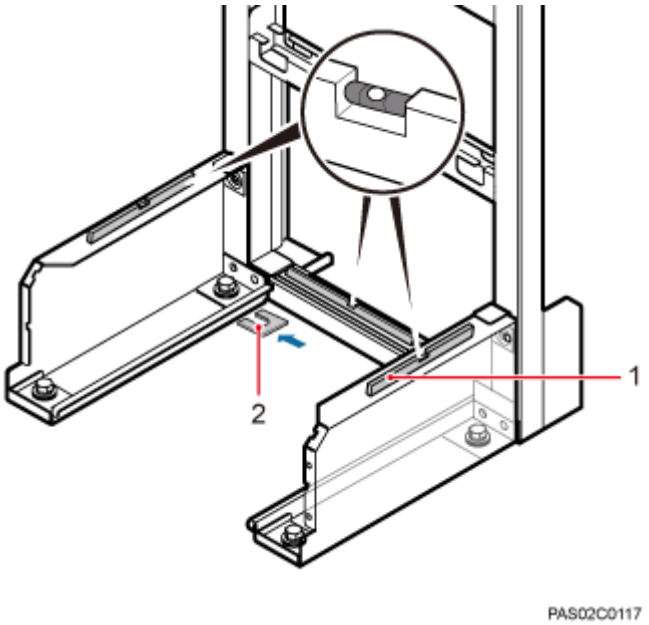

(1) Level (2) Spacer

Copyright © Huawei Technologies Co., Ltd.

Step 9 Use a socket wrench to tighten the bolts to 50 N·m (442.54 lbf·in.), as shown in **Figure 7-36**.

Figure 7-36 Tightening the bolts

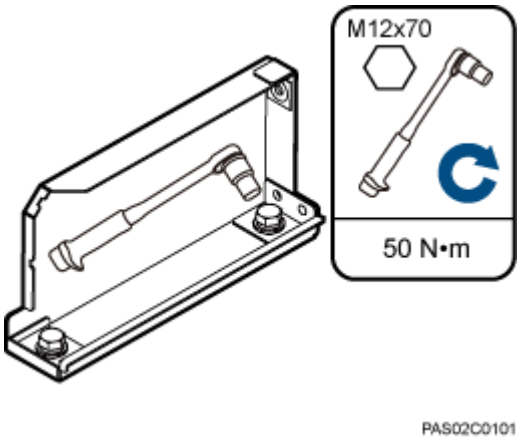

----End

7.5.3 Installing a Main Bracket

This section describes the procedure for installing a main bracket.

Context

NOTICE

- Install BTS3902Es in the sequence from bottom to top and from left to right.
- The contact pieces on the main bracket are locked before a main bracket is mounted.
- Rubber washers are easily pressed or broken.

Procedure

- Height-unrestricted scenario

  In the height-unrestricted scenario, main brackets are installed on beam 1 and beam 3, as shown in **Figure 7-37**. For details about how to install a main bracket, see the label on an IFS06.

Copyright © Huawei Technologies Co., Ltd.

Figure 7-37 Installing main brackets in the height-unrestricted scenario

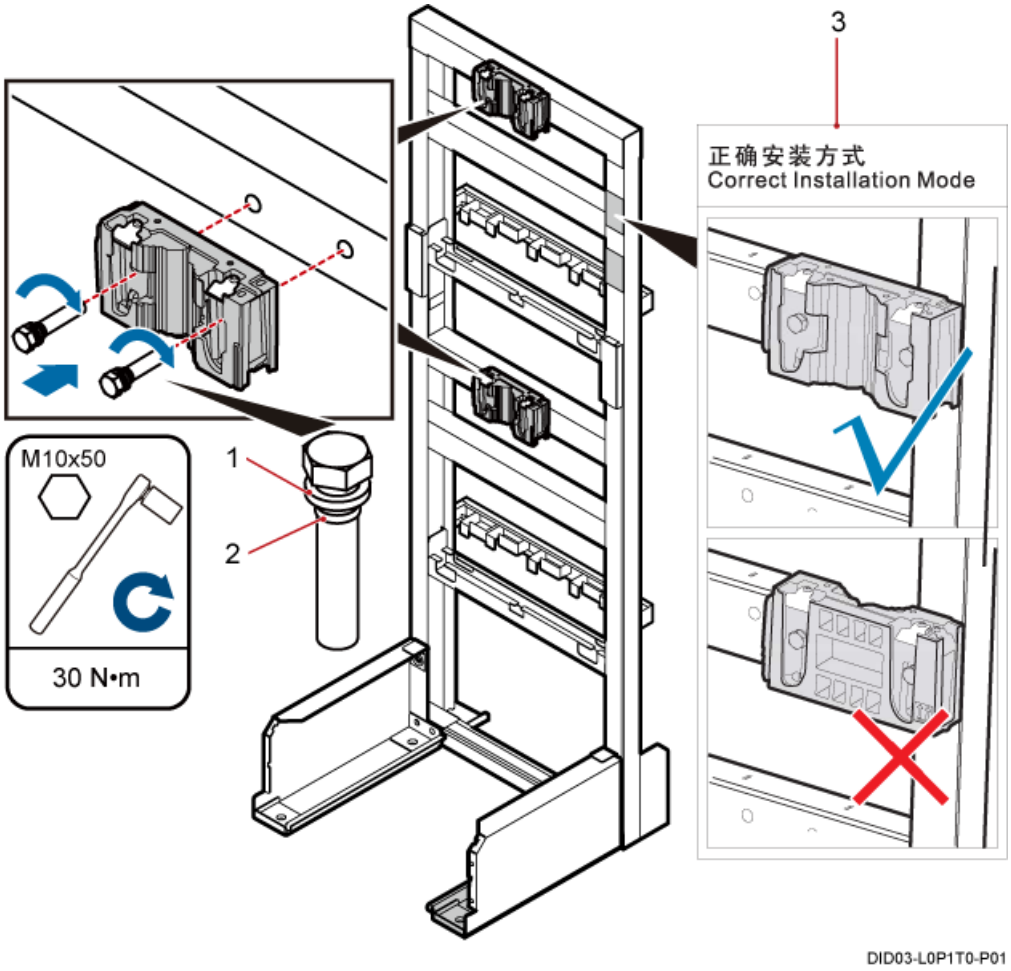

Copyright © Huawei Technologies Co., Ltd.

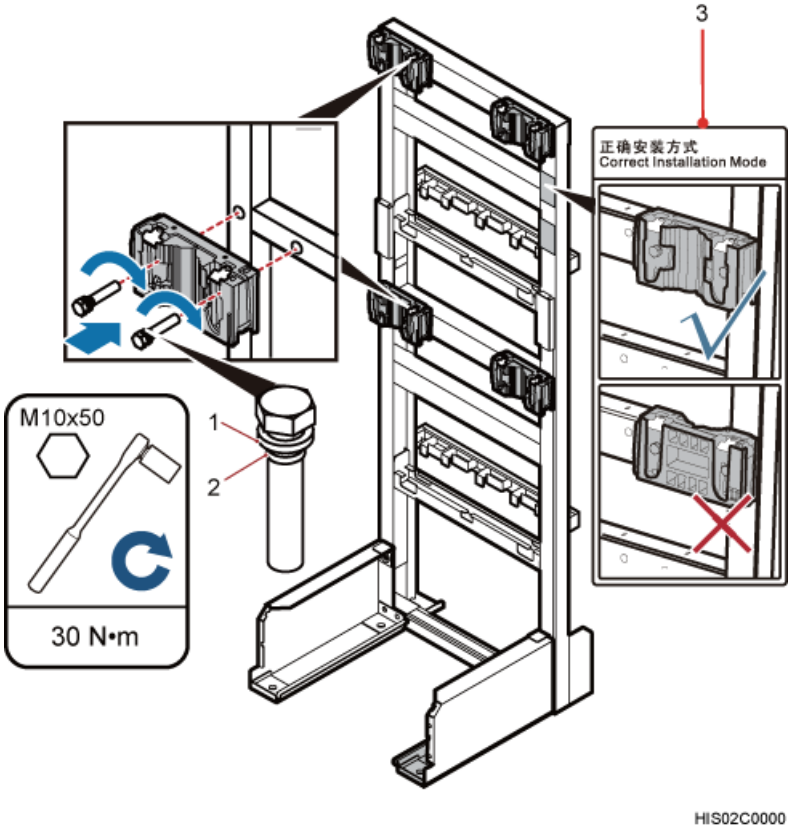

(1) Spring washer (2) Rubber washer (3) Label

- Height-restricted scenario

  In the height-restricted scenario, main brackets are installed on beam 2 and beam 4, as shown in **Figure 7-38**. For details about how to install a main bracket, see the label on an IFS06.

Copyright © Huawei Technologies Co., Ltd.

Figure 7-38 Installing main brackets in the height-restricted scenario

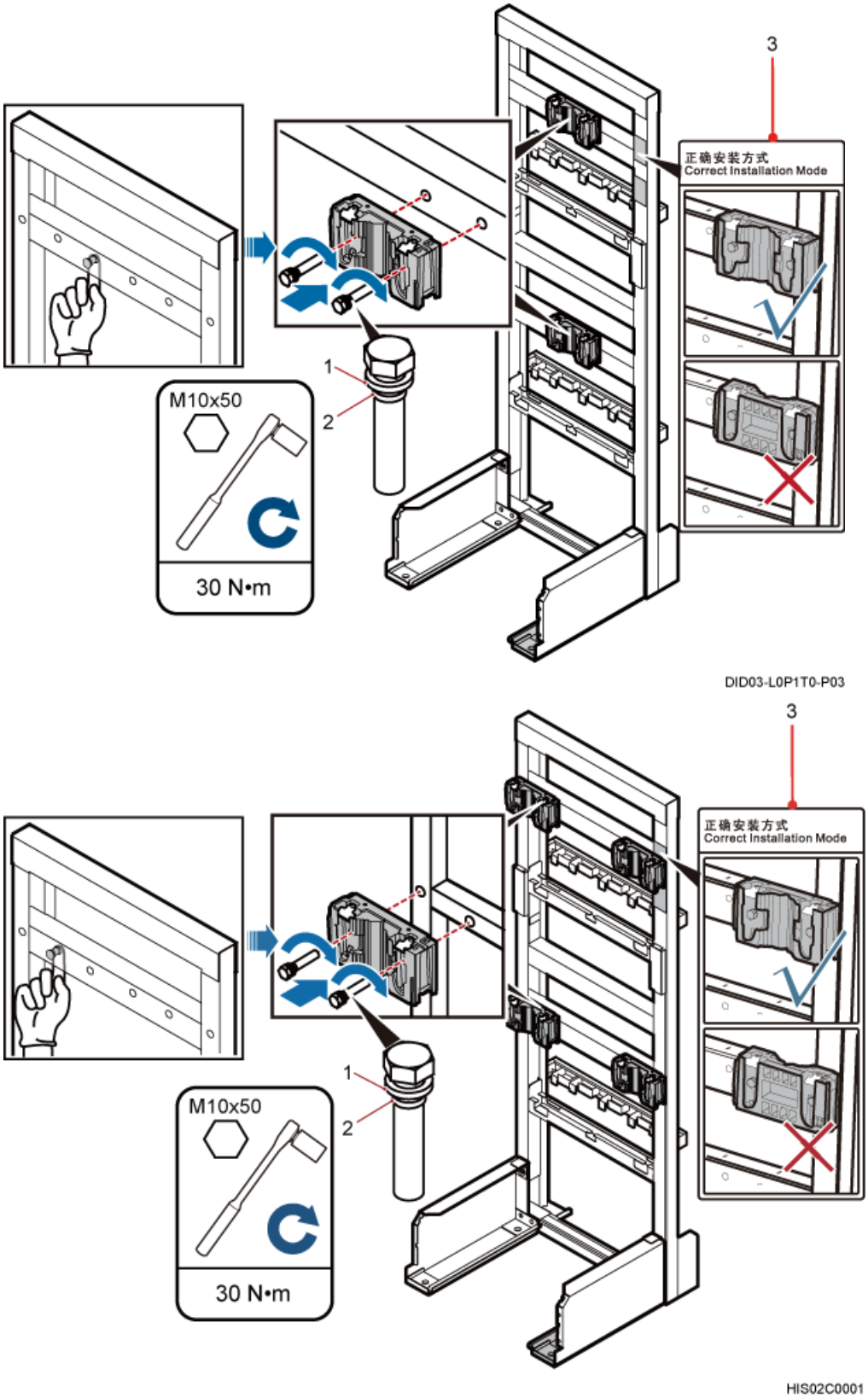

(1) Spring washer (2) Rubber washer (3) Label

Copyright © Huawei Technologies Co., Ltd.

----End

7.5.4 Installing an IFS06 PGND Cable

A PGND cable connects a ground screw on an IFS06 to the onsite ground bar to ensure proper grounding of the IFS06.

Context

Table 7-1 lists the specifications of a PGND cable.

Table 7-1 Specifications of a PGND cable

Cable	One End	The Other End	Remarks
PGND cable	OT terminal (M8)	OT terminal (M8)	Green and yellow cable (16 mm^2)

NOTE

The cable route depends on actual requirements.

Procedure

Step 1 Connect one end of the PGND cable to the ground terminal of the ground bar on the IFS06 and the other end to an external ground bar, as shown in **Figure 7-39**.

Copyright © Huawei Technologies Co., Ltd.

Figure 7-39 Installing a PGND cable

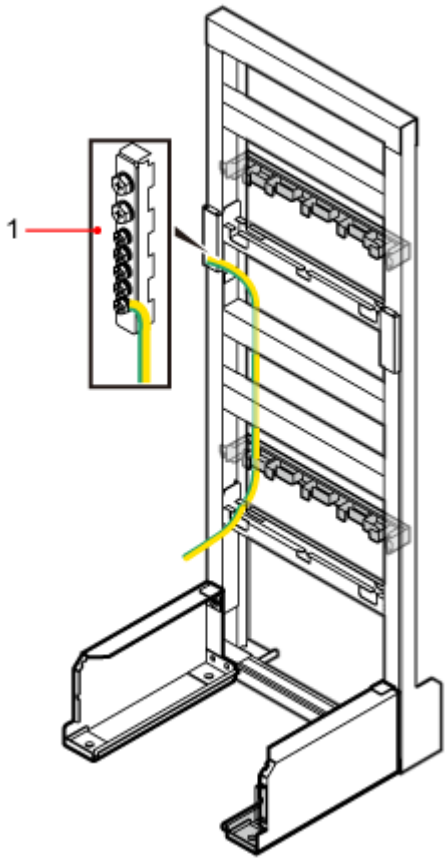

(1) Ground bar

NOTE

When installing the PGND cable, tightly press the OT terminal in the correct direction, as shown in **Figure 7-40**.

Figure 7-40 Installing an OT terminal in the correct manner

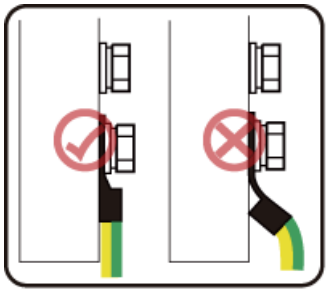

EID00C6000

Step 2 Route the cable by referring to **10.1 Cabling Requirements**, and then use cable ties to bind the cable.

Copyright © Huawei Technologies Co., Ltd.

Step 3 Label the cable by referring to Attaching a Cable-Tying Label in *Installation Reference*.

----End

7.5.5 Installing BTS3902Es

This section describes the procedures for installing BTS3902Es.

Context

NOTE

- Place a foam pad or cardboard under a BTS3902E to protect the housing from any damage.
- Do not stand a BTS3902E on a floor because the load-bearing capacity of a BTS3902E at the bottom is low.

Procedure

Step 1 Link the M6 OT terminal at one end of the BTS3902E PGND cable to the ground terminal for the BTS3902E, and leave the other end idle, as shown in **Figure 7-41**.

Figure 7-41 Connecting the BTS3902E PGND cable to the ground terminal

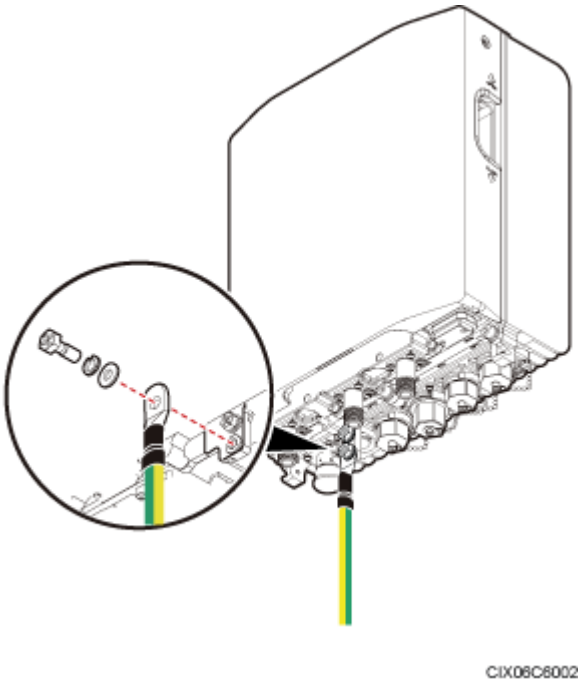

Step 2 Install the BTS3902E on the main bracket, as shown in **Figure 7-42**.

Copyright © Huawei Technologies Co., Ltd.

Figure 7-42 Installing the BTS3902E on the main bracket

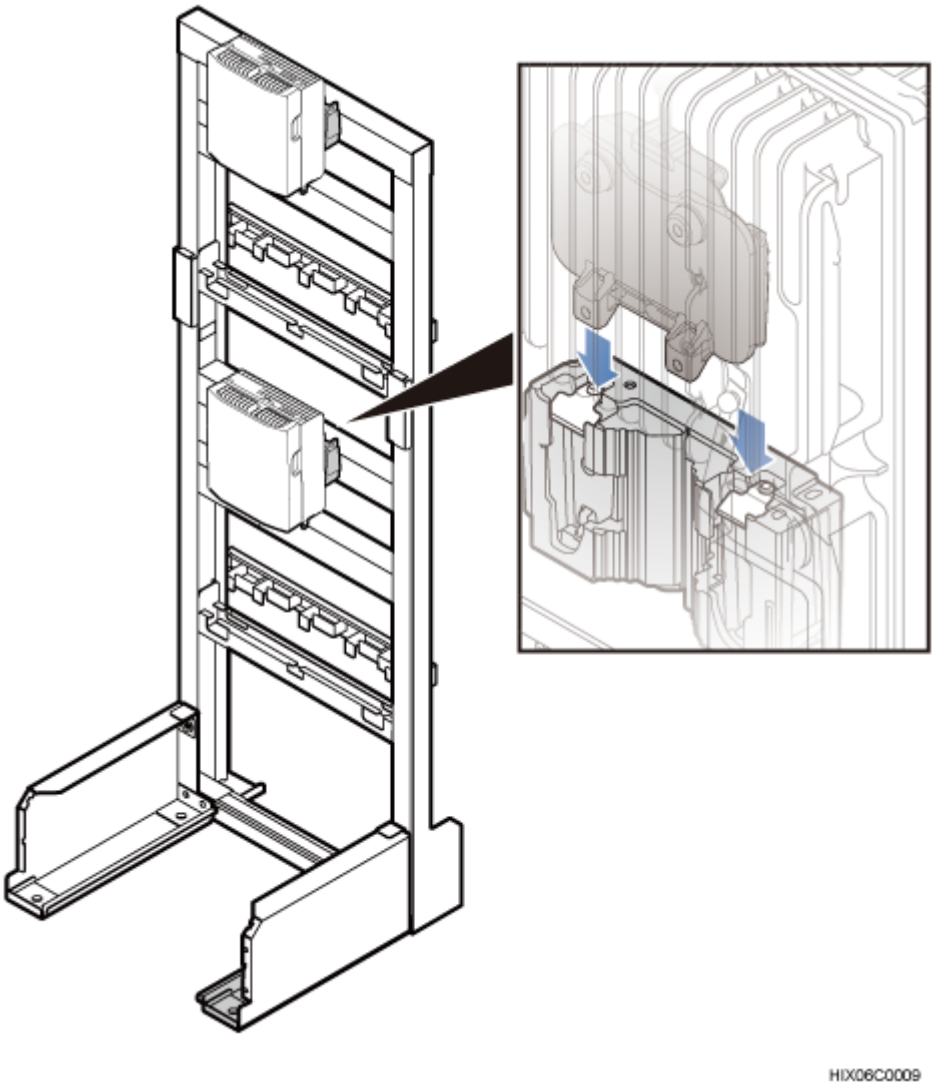

NOTE

Install lower-level BTS3902Es before installing upper-level BTS3902Es.

----End

Copyright © Huawei Technologies Co., Ltd.

8 Installing a BTS3902E (using angle-adjustable mounting kits)

About This Chapter

This chapter describes the procedure for installing a BTS3902E with an embedded antenna, when an angle-adjustable mounting kit is used. The BTS3902E can be installed on a metal pole, wall, wood pole in different scenarios.

8.1 Installing a BTS3902E on a Pole with the Diameter of 60 mm to 114 mm (2.36 in. to 4.49 in.)
This section describes the procedure and precautions for installing a BTS3902E on a pole with the diameter of 60 mm to 114 mm (2.36 in. to 4.49 in.).

8.2 Installing a BTS3902E on a Pole with the Diameter of 114 mm to 400 mm (4.49 in. to 15.75 in.)
This section describes the procedure and precautions for installing a BTS3902E on a pole with the diameter of 114 mm to 400 mm (4.49 in. to 15.75 in.).

8.3 Installing a BTS3902E on a Wall
This section describes the procedure and precautions for installing a BTS3902E on a wall.

8.4 Installing a BTS3902E on a Wood Pole with the Diameter of 200 mm to 400 mm (7.87 in. to 15.75 in.)
This section describes the procedure and precautions for installing a BTS3902E on a wood pole.

Copyright © Huawei Technologies Co., Ltd.

8.1 Installing a BTS3902E on a Pole with the Diameter of 60 mm to 114 mm (2.36 in. to 4.49 in.)

This section describes the procedure and precautions for installing a BTS3902E on a pole with the diameter of 60 mm to 114 mm (2.36 in. to 4.49 in.).

Procedure

Step 1 Determine the position for installing the main mounting bracket.

Step 2 Put the M10x150 long bolts through the main mounting bracket, add the rubber washers and double-headed nuts to the bolts in sequence, as shown in **Figure 8-1**.

Figure 8-1 Installing the main mounting bracket

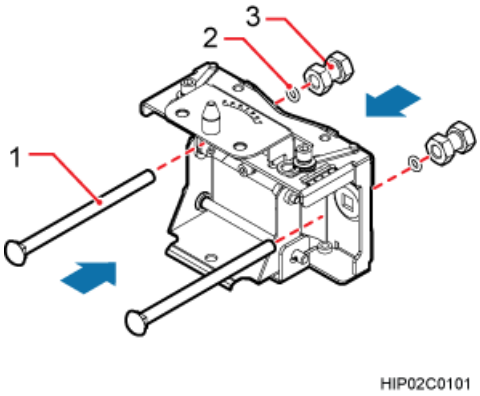

(1) Long bolt (2) Rubber washer (3) Double-headed nut

Step 3 Install the main mounting bracket and auxiliary mounting bracket, as shown in **Figure 8-2**.

1. Add the double-headed nuts to the long bolts. Rotate a double-headed nut onto each of the bolts until the double-headed nuts are about 50 mm (1.97 in.) away from the edges of the bolts.
2. Ensure that the arrow on the auxiliary bracket points up. Then fit the U-shaped slot of the auxiliary bracket vertically onto the double-headed nut on the main mounting bracket and ensure that the hoist clamp has reset automatically.
3. Use a torque wrench to tighten the double-headed nuts to 40 N·m (354.03 lbf·in.) so that the main and auxiliary mounting brackets are secured onto the pole.

NOTICE

Tighten the two double-headed nuts synchronously and so that the distances between the two sides of the main and auxiliary brackets are the same.

Copyright © Huawei Technologies Co., Ltd.

Figure 8-2 Installing the main and auxiliary mounting brackets

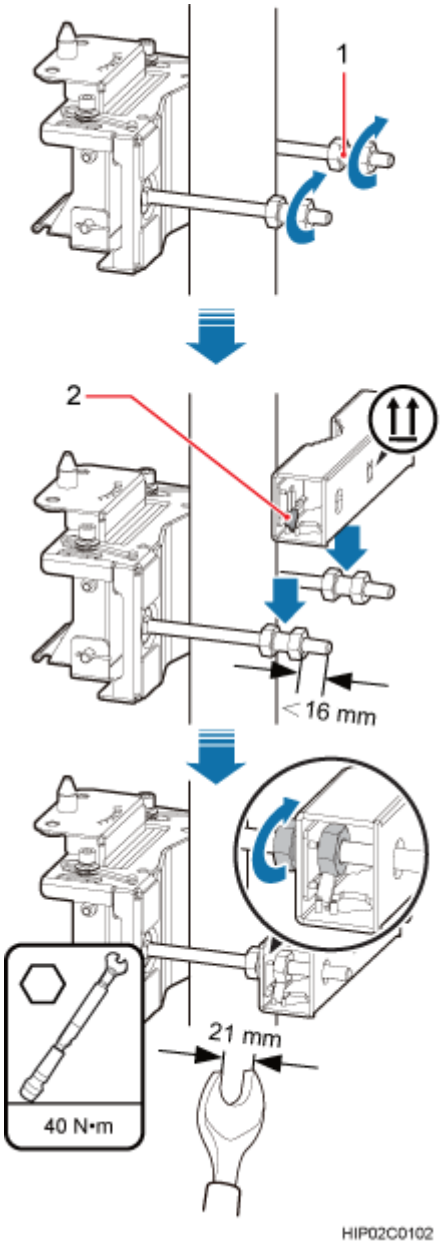

(1) Double-headed nut (2) Hoist clamp

Step 4 Install the BTS3902E onto the main mounting bracket vertically. Put the upper positioning pin through the hole on the attachment plate and the lower positioning pin through the hole on the main mounting bracket, as shown in **Figure 8-3**.

Copyright © Huawei Technologies Co., Ltd.

Figure 8-3 Installing the BTS3902E onto the main mounting bracket

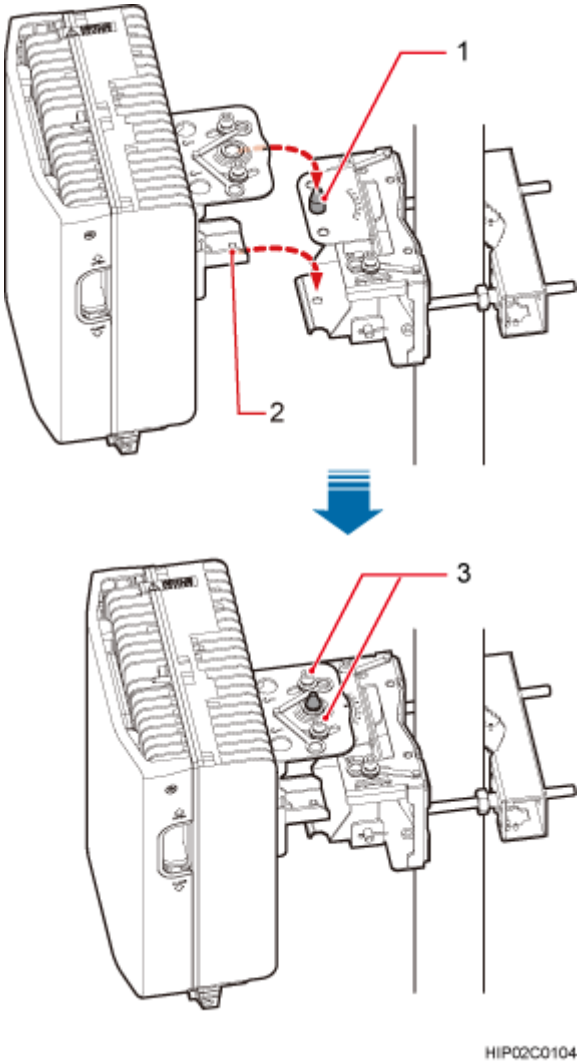

(1) Upper positioning pin (2) Lower positioning pin (3) Positioning screw

Step 5 Adjust the installation angle of the BTS3902E: horizontal angle ±30°, vertical angle ±10°.

NOTE

- If the positioning pin is tightened too hard, the installation angle cannot be adjusted. In this case, loosen the positioning screw first.
- The horizontal angle and vertical angle can be adjusted simultaneously. The vertical angle can be determined either from the plan or elevation view.

- Adjust the horizontal angle.

1. Hold the BTS3902E to adjust the horizontal angle to a proper degree.
2. Use an M8 inner hexagon torque screwdriver to tighten the positioning screw to 12 N·m (106.21 lbf·in.), as shown in **Figure 8-4**.

Copyright © Huawei Technologies Co., Ltd.

Figure 8-4 Adjusting the horizontal angle

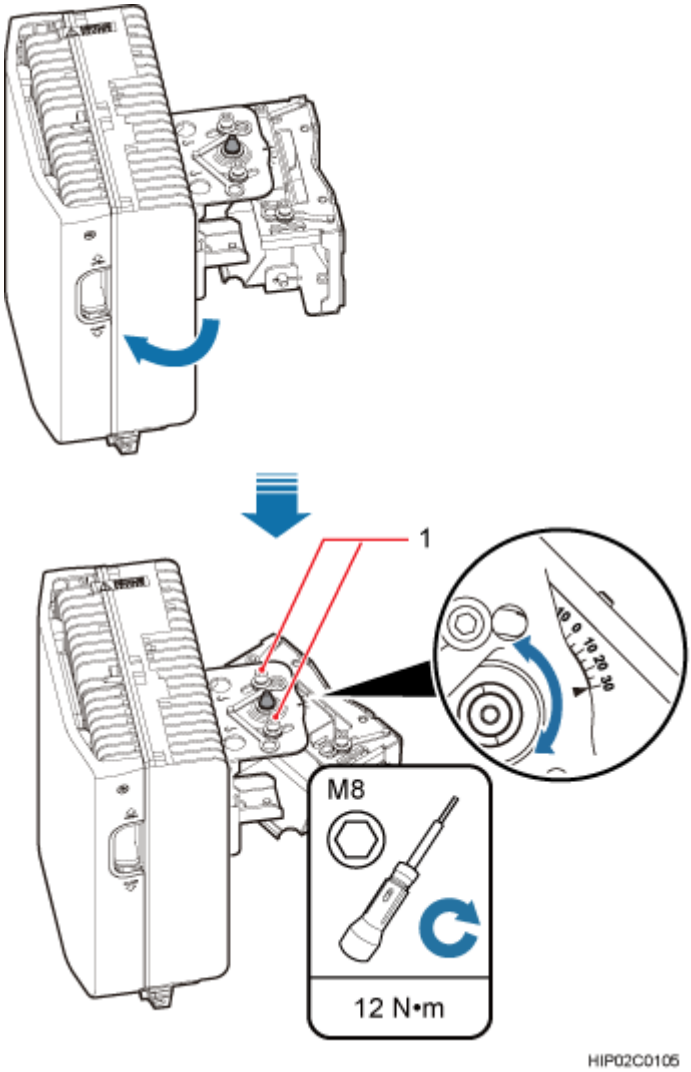

(1) Positioning screw

- Adjust the vertical angle. **Figure 8-5** shows the vertical angle from the plan view. If the vertical angle is from the elevation view, adjust the angle to the opposite direction.

1. Hold the BTS3902E to adjust the vertical angle from the plan view or elevation view to proper degrees.
2. Use an M8 inner hexagon torque screwdriver to tighten the positioning screw to 12 N·m (106.21 lbf·in.).

Huawei Proprietary and Confidential
Copyright © Huawei Technologies Co., Ltd.

Figure 8-5 Adjusting the vertical angle

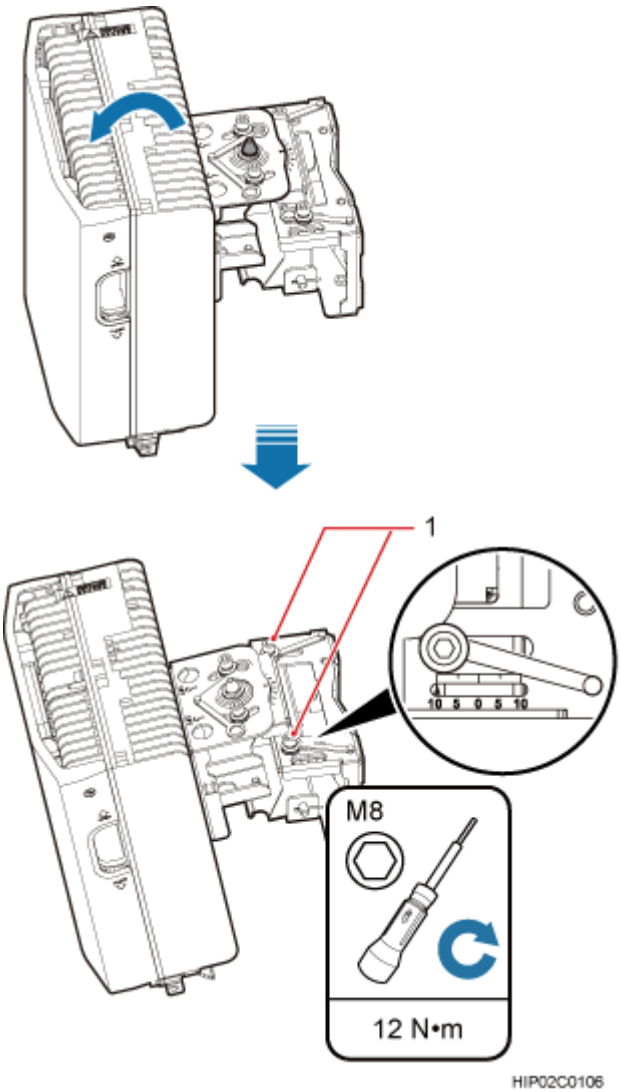

(1) Positioning screw

Step 6 Ensure that the positioning screws both in the vertical direction and horizontal direction have been secured. Tighten the positioning screws in both directions simultaneously.

----End

8.2 Installing a BTS3902E on a Pole with the Diameter of 114 mm to 400 mm (4.49 in. to 15.75 in.)

This section describes the procedure and precautions for installing a BTS3902E on a pole with the diameter of 114 mm to 400 mm (4.49 in. to 15.75 in.).

Copyright © Huawei Technologies Co., Ltd.

Procedure

Step 1 Remove the double-headed nuts and auxiliary mounting bracket from the main mounting bracket.

Step 2 Install an adapting plate both on the top and bottom of the main mounting bracket. Tighten two M6x14 screws to 5 N·m (44.25 lbf·in.) to secure each of the plates, as shown in **Figure 8-6**.

Figure 8-6 Installing the adapting plate assembly

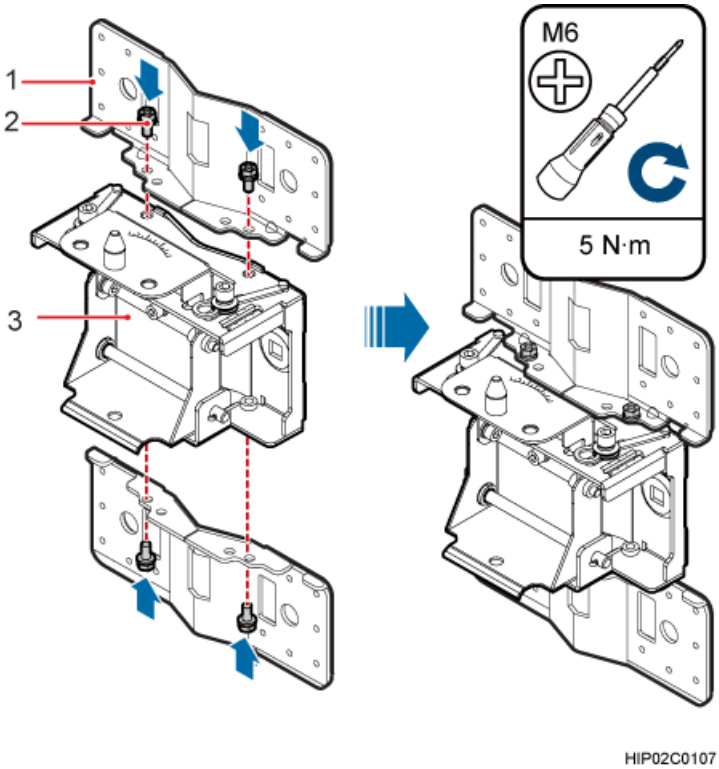

(1) Adapting plate (2) Screw (3) Main mounting bracket

Step 3 Install two hose clamps through the mounting hole group B on the adapting plates, as shown in **Figure 8-7**.

Copyright © Huawei Technologies Co., Ltd.

Figure 8-7 Installing the hose clamps through the mounting hole group B

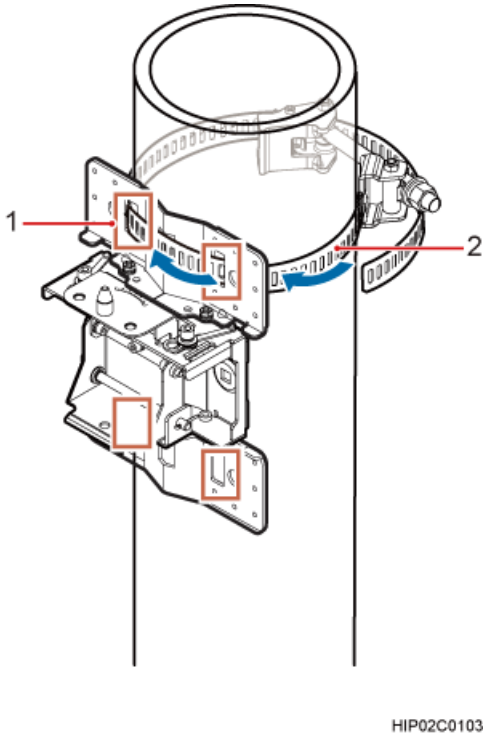

(1) Mounting hole group B (2) Hose clamp

Step 4 Install the mounting piece, as shown in **Figure 8-8**.

1. Tighten the M12 screws to 30 N·m (265.52 lbf·in.)
2. Use a level to check whether the adapting plate is on a horizontal plane.

NOTE

Secure the upper hose clamp before securing the lower clamp.

Copyright © Huawei Technologies Co., Ltd.

Figure 8-8 Securing the hose clamps

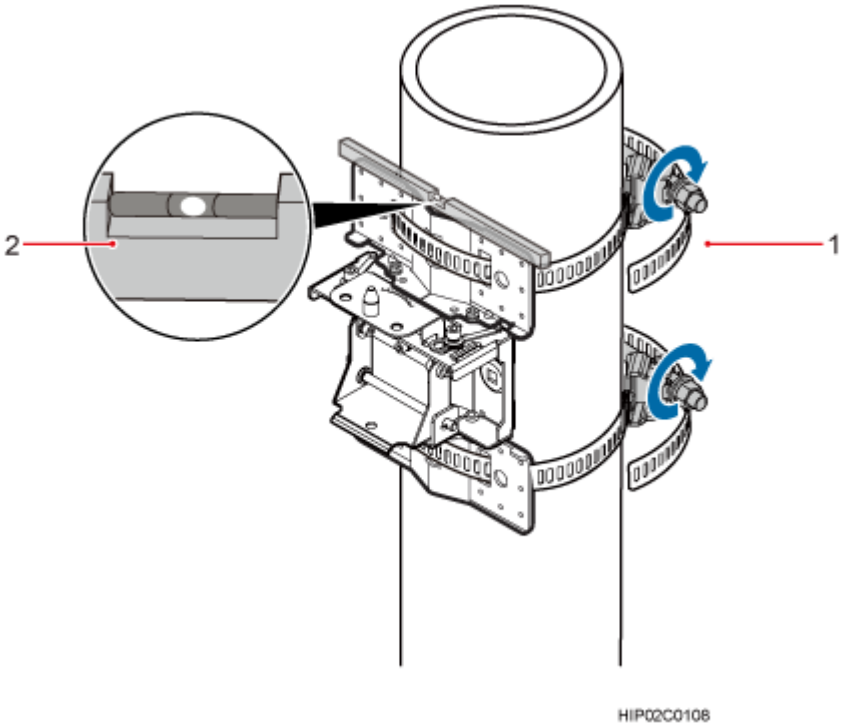

(1) Hose clamp (2) Level

Step 5 Install the BTS3902E onto the main mounting bracket vertically. Put the upper positioning pin through the hole on the attachment plate and the lower positioning pin through the hole on the main mounting bracket, pre-tighten the positioning screws, as shown in **Figure 8-9**.

Copyright © Huawei Technologies Co., Ltd.

Figure 8-9 Installing the BTS3902E onto the main mounting bracket

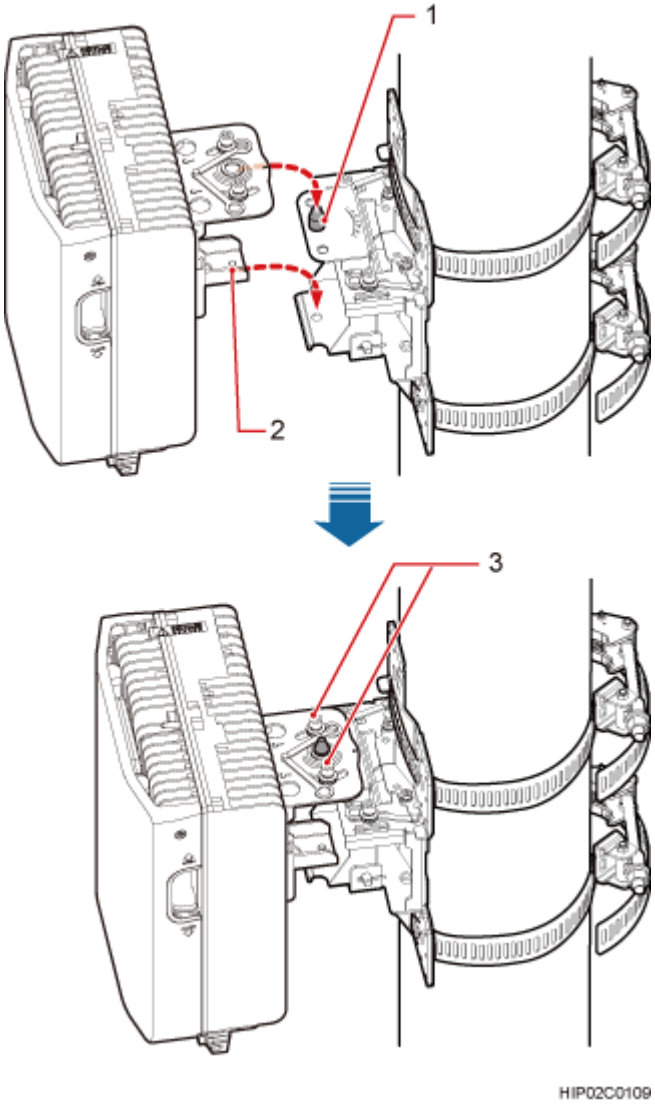

(1) Upper positioning pin (2) Lower positioning pin (3) Positioning screw

Step 6 Adjust the installation angle of the BTS3902E: horizontal angle ±30°, vertical angle ±10°.

NOTE

- If the positioning pin is tightened too hard, the installation angle cannot be adjusted. In this case, loosen the positioning screw first.
- The horizontal angle and vertical angle can be adjusted simultaneously. The vertical angle can be determined either from the plan or elevation view.

- Adjust the horizontal angle.

1. Hold the BTS3902E to adjust the horizontal angle to a proper degree.
2. Use an M8 inner hexagon torque screwdriver to tighten the positioning screw to 12 N·m (106.21 lbf·in.), as shown in **Figure 8-10**.

Copyright © Huawei Technologies Co., Ltd.

Figure 8-10 Adjusting the horizontal angle

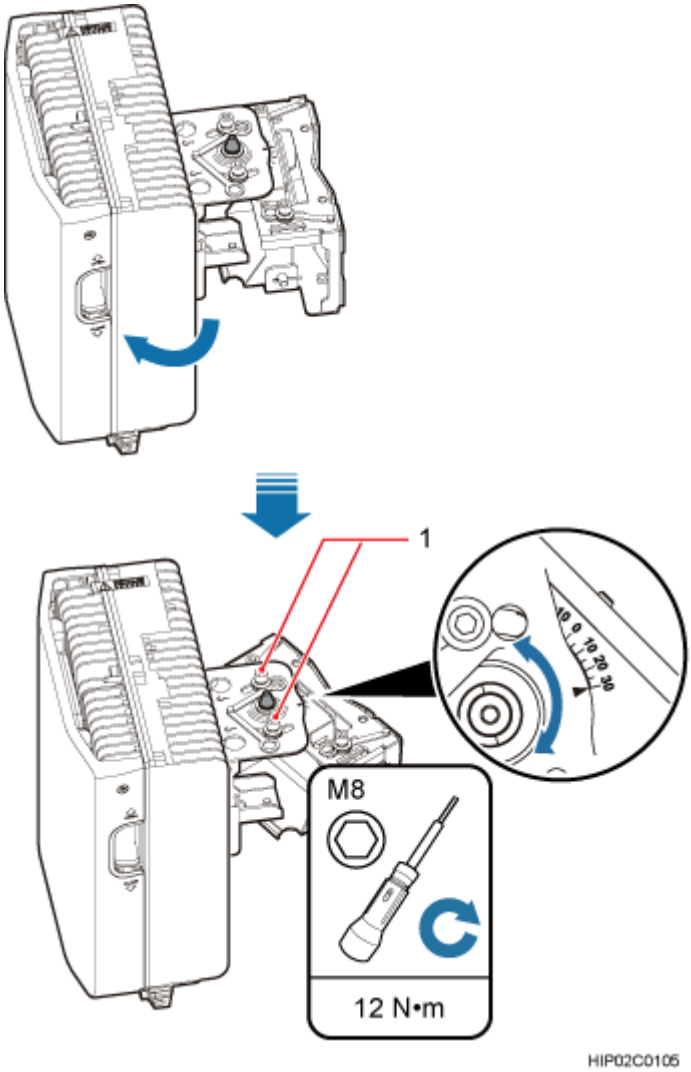

(1) Positioning screw

- Adjust the vertical angle. **Figure 8-11** shows the vertical angle from the plan view. If the vertical angle is from the elevation view, adjust the angle to the opposite direction.

1. Hold the BTS3902E to adjust the vertical angle from the plan view or elevation view to proper degrees.
2. Use an M8 inner hexagon torque screwdriver to tighten the positioning screw to 12 N·m (106.21 lbf·in.).

Huawei Proprietary and Confidential
Copyright © Huawei Technologies Co., Ltd.

Figure 8-11 Adjusting the vertical angle

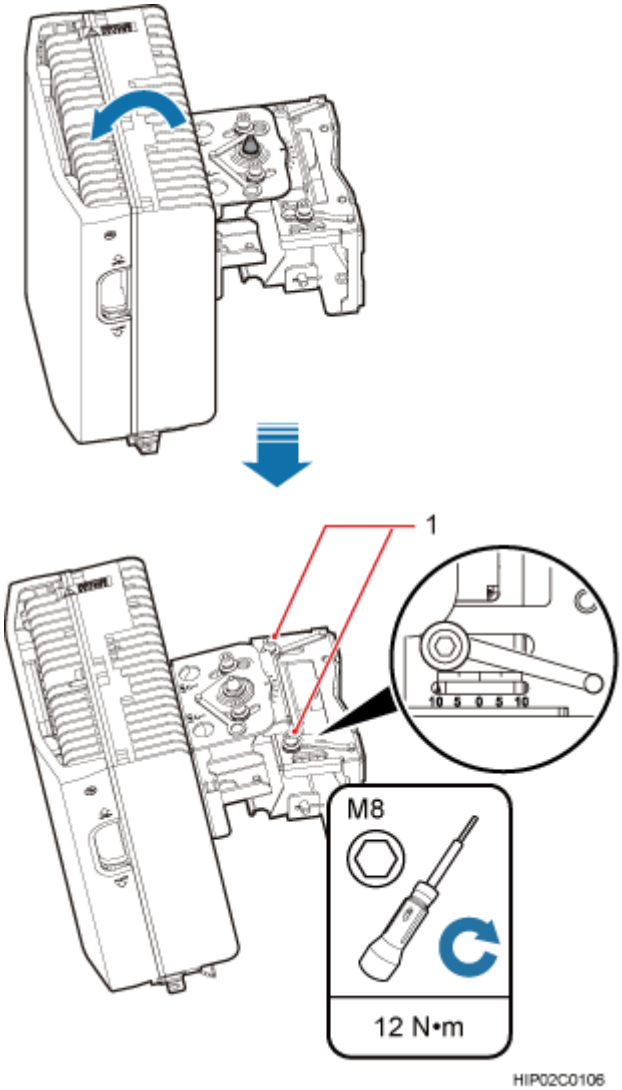

(1) Positioning screw

Step 7 Ensure that the positioning screws both in the vertical direction and horizontal direction have been secured. Tighten the positioning screws in both directions simultaneously.

----End

8.3 Installing a BTS3902E on a Wall

This section describes the procedure and precautions for installing a BTS3902E on a wall.

Copyright © Huawei Technologies Co., Ltd.

Context

NOTICE

You must use adjustable torque tools to tighten all the screws and nuts to the required torque described in this document.

Procedure

Step 1 Remove the double-headed nuts and auxiliary mounting bracket from the main mounting bracket.

Step 2 Install an adapting plate both on the top and bottom of the main mounting bracket. Tighten two M6x14 screws to 5 N·m (44.25 lbf·in.) to secure each of the plates, as shown in **Figure 8-12**.

Figure 8-12 Installing the adapting plate assembly

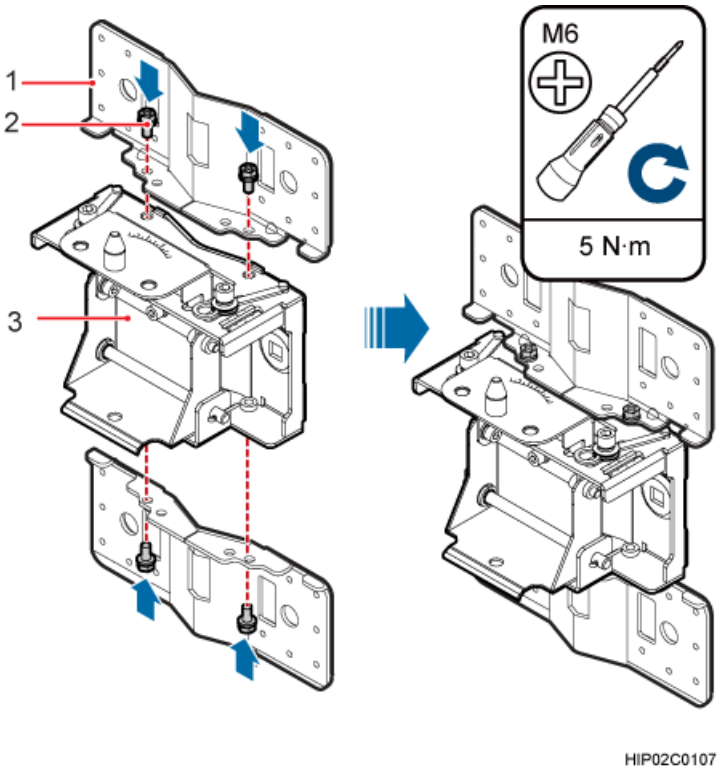

(1) Adapting plate (2) Screw (3) Main mounting bracket

Step 3 Place the adapting plates against the wall, use a level to verify that the plates are horizontal, and then use a marker to mark anchor points, as shown in **Figure 8-13**.

Copyright © Huawei Technologies Co., Ltd.

Figure 8-13 Marking anchor points

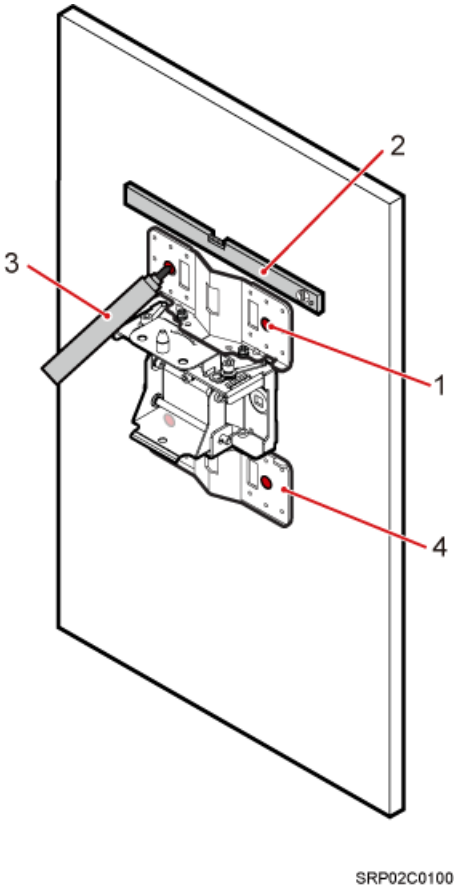

(1) Mounting hole group A (2) Level (3) Marker (4) Adapting plate

CAUTION

To prevent inhalation or eye contact with dust, take adequate preventive measures when drilling holes.

Step 4 Drill holes at the anchor points, and then install expansion bolt assemblies, as shown in **Figure 8-14**.

Copyright © Huawei Technologies Co., Ltd.

Figure 8-14 Drilling holes and install expansion bolt assemblies

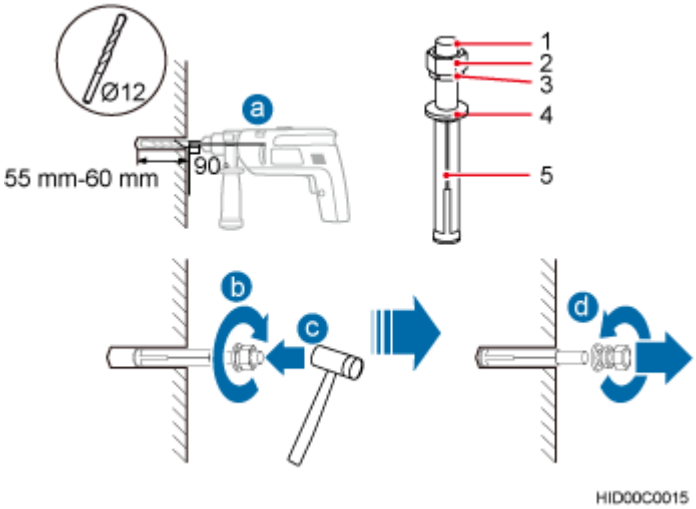

(1) M10x80 bolt (2) Nut (3) Spring washer (4) Flat washer (5) Expansion tube

1. Use a hammer drill with a φ12 bit to drill holes perpendicularly with the wall at the marked anchor points. Ensure that the depth of each hole ranges from 55 mm to 60 mm (2.17 in. to 2.36 in.) and each hole is of the same depth.
2. Use a vacuum cleaner to clear dust inside and around the holes, and then measure the inter-hole spacing. If the spacing is too wide or too narrow, drill holes again.
3. Tighten each expansion bolt slightly and place them perpendicularly into each hole.
4. Hit each expansion bolt using a rubber mallet to enable the expansion tube to enter the hole completely.
5. Remove the M10x80 bolt, nut, spring washer, and flat washer from each expansion bolt assembly in sequence.

NOTICE

After dismantling an expansion bolt assembly, ensure that the top of the expansion tube is on the same level as the wall. Otherwise, the device cannot be installed on the wall evenly and securely.

Step 5 Fit the mounting piece on the expansion bolt, and then use a combination wrench (with a size of 17 mm or 0.67 in.) to tighten the expansion bolts to 25 N·m (265.52 lbf·in.), as shown in **Figure 8-15**.

NOTICE

Ensure that the arrow on the main mounting bracket points upwards when installing the mounting piece.

Copyright © Huawei Technologies Co., Ltd.

Figure 8-15 Fitting the mounting piece onto the expansion bolts

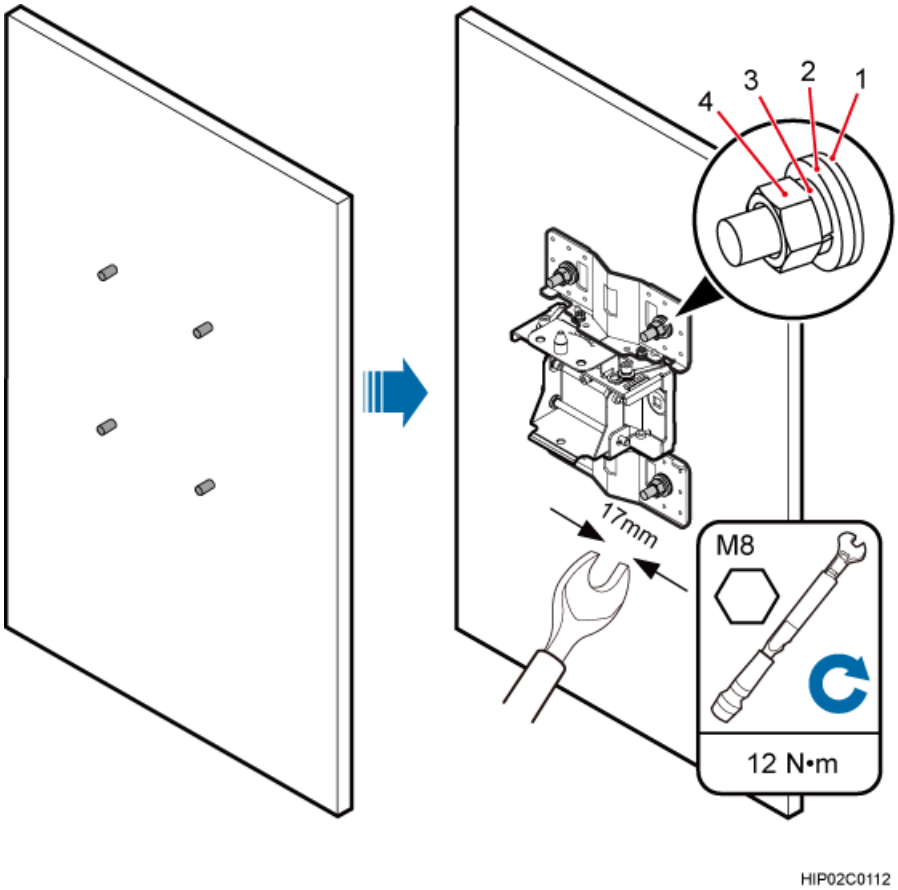

(1) Insulation washer (2) Flat washer (3) Spring washer (4) Nut

Step 6 Install the BTS3902E onto the main mounting bracket vertically. Put the upper positioning pin through the hole on the attachment plate and the lower positioning pin through the hole on the main mounting bracket, pre-tighten the positioning screws, as shown in **Figure 8-16**.

Copyright © Huawei Technologies Co., Ltd.

Figure 8-16 Installing the BTS3902E onto the main mounting bracket

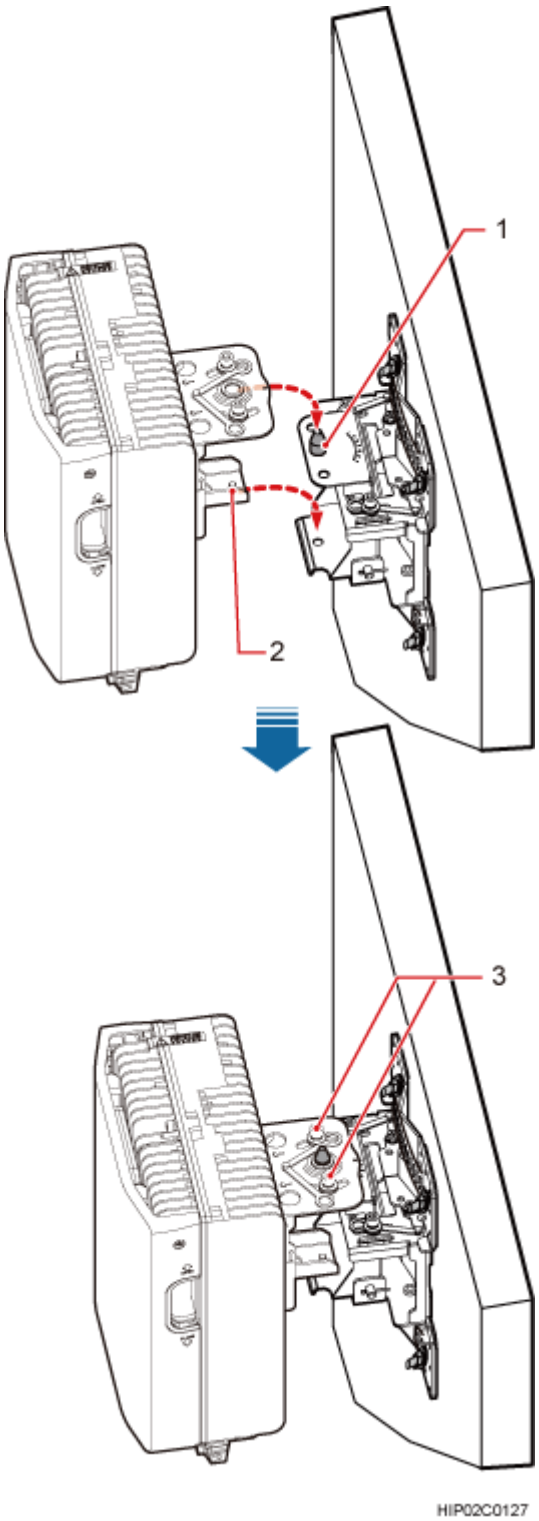

(1) Upper positioning pin (2) Lower positioning pin (3) Positioning screw

Step 7 Adjust the installation angle of the BTS3902E: horizontal angle ±30°, vertical angle ±10°.

Copyright © Huawei Technologies Co., Ltd.

NOTE

- If the positioning pin is tightened too hard, the installation angle cannot be adjusted. In this case, loosen the positioning screw first.
- The horizontal angle and vertical angle can be adjusted simultaneously. The vertical angle can be determined either from the plan or elevation view.

- Adjust the horizontal angle.

1. Hold the BTS3902E to adjust the horizontal angle to a proper degree.
2. Use an M8 inner hexagon torque screwdriver to tighten the positioning screw to 12 N·m (106.21 lbf·in.), as shown in **Figure 8-17**.

Figure 8-17 Adjusting the horizontal angle

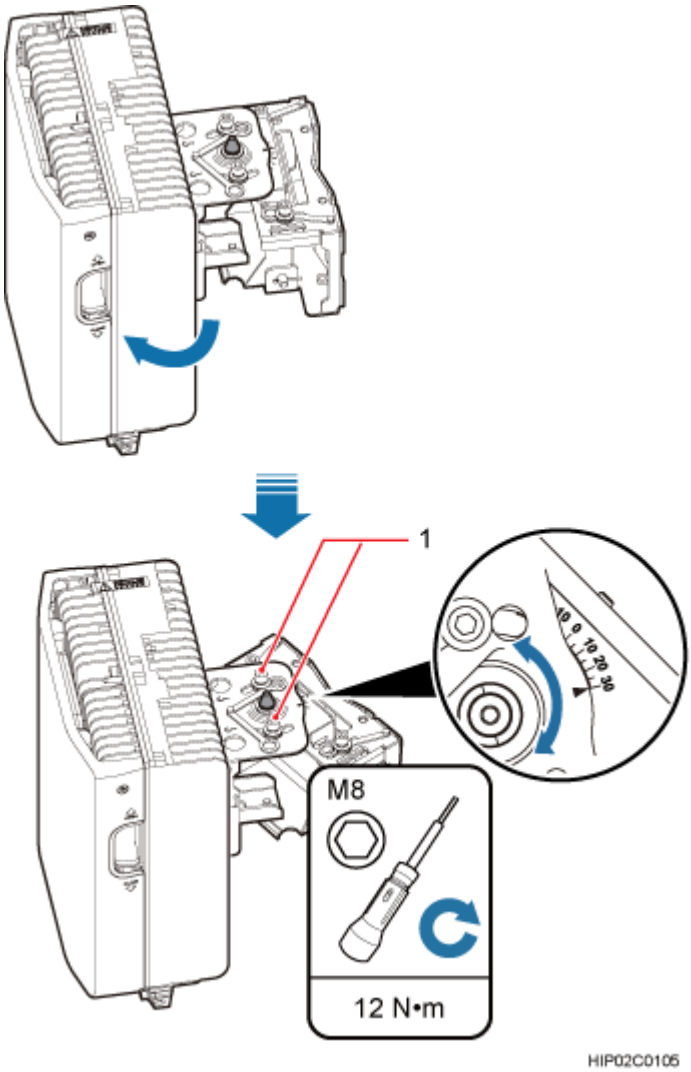

(1) Positioning screw

- Adjust the vertical angle. **Figure 8-18** shows the vertical angle from the plan view. If the vertical angle is from the elevation view, adjust the angle to the opposite direction.

Huawei Proprietary and Confidential
Copyright © Huawei Technologies Co., Ltd.

1. Hold the BTS3902E to adjust the vertical angle from the plan view or elevation view to proper degrees.
2. Use an M8 inner hexagon torque screwdriver to tighten the positioning screw to 12 N·m (106.21 lbf·in.).

Figure 8-18 Adjusting the vertical angle

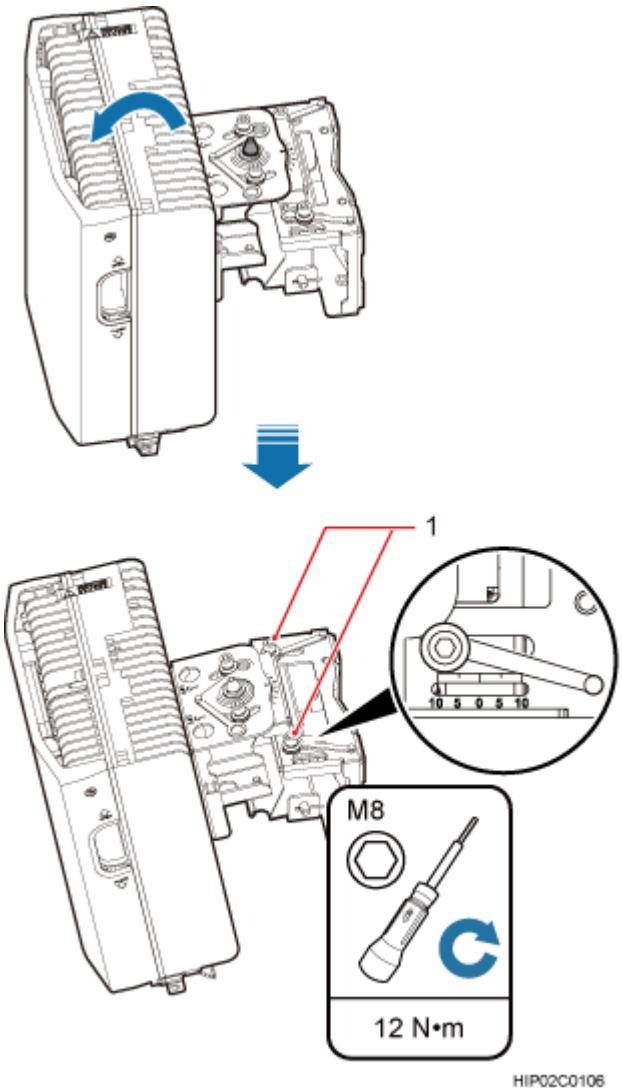

(1) Positioning screw

Step 8 Ensure that the positioning screws both in the vertical direction and horizontal direction have been secured. Tighten the positioning screws in both directions simultaneously.

----End

Copyright © Huawei Technologies Co., Ltd.

8.4 Installing a BTS3902E on a Wood Pole with the Diameter of 200 mm to 400 mm (7.87 in. to 15.75 in.)

This section describes the procedure and precautions for installing a BTS3902E on a wood pole.

Procedure

Step 1 Drill holes. Drill two holes with the diameter of 18 mm (0.71 in.) through the middle axis of the wood pole, ensuring that the inter-hole spacing is 203 mm (7.99 in.), as shown in **Figure 8-19**.

Figure 8-19 Drilling holes

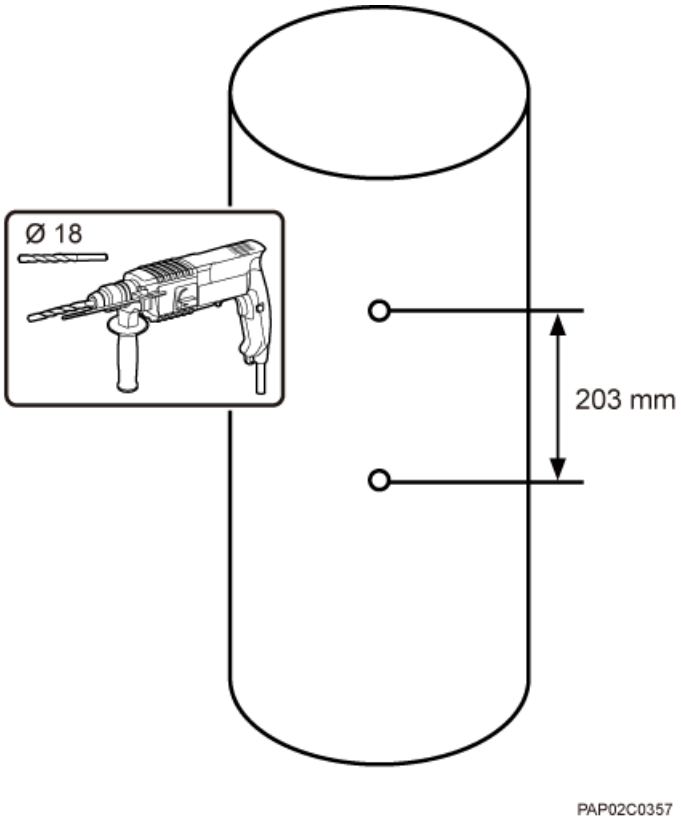

Step 2 Install an adapting plate both on the top and bottom of the main mounting bracket. Tighten two M6x14 screws to 5 N·m (44.25 lbf·in.) to secure each of the plates, as shown in **Figure 8-20**.

Copyright © Huawei Technologies Co., Ltd.

Figure 8-20 Installing the adapting plate assembly

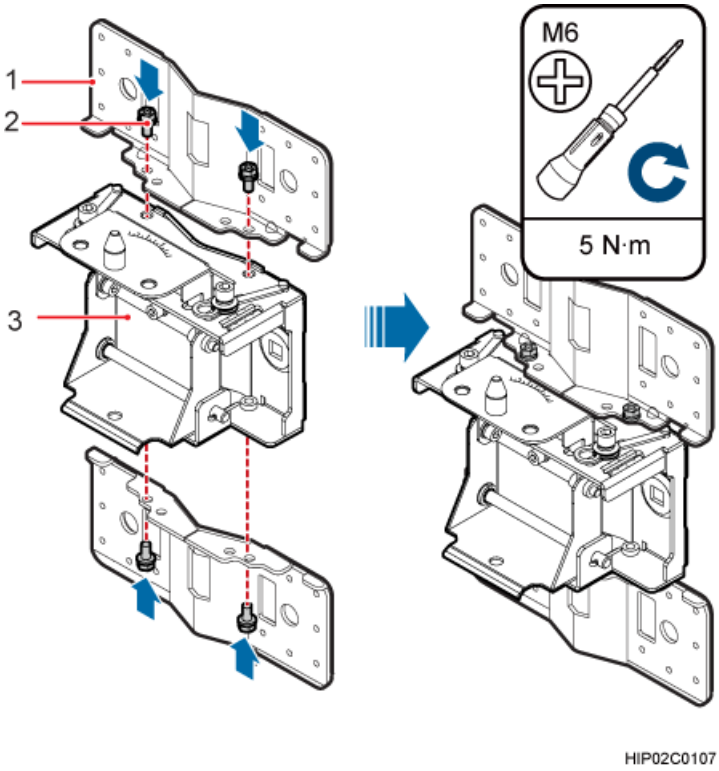

(1) Adapting plate (2) Screw (3) Main mounting bracket

Step 3 Install the mounting piece, as shown in **Figure 8-21**.

1. Align the mounting hole group C with the mounting holes in the wood pole.
2. Put the two long M16 bolts with spacers through the upper and lower mounting holes.

Copyright © Huawei Technologies Co., Ltd.

Figure 8-21 Installing the mounting piece

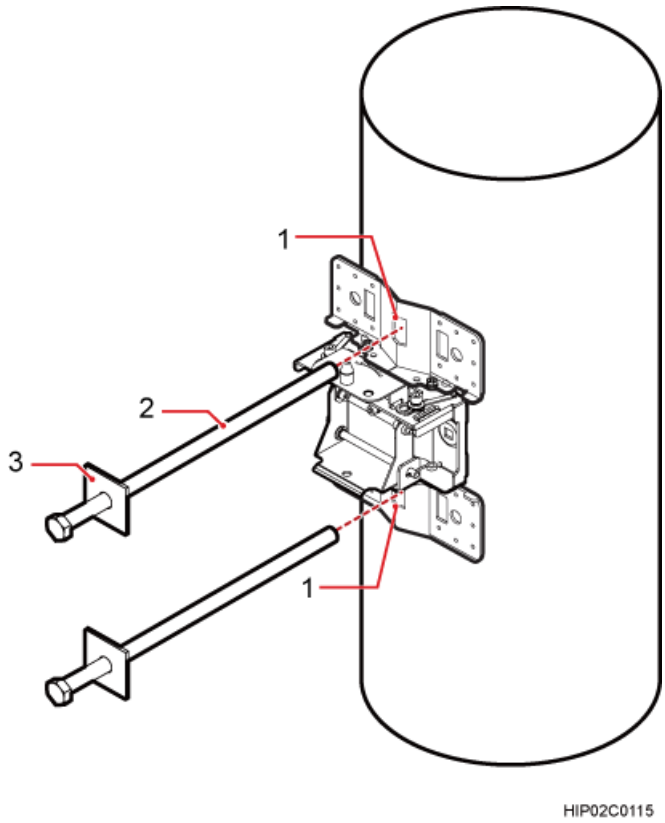

(1) Mounting hole group C (2) Bolt (3) Spacer

Step 4 Tighten the nuts to 80 N·m (708.06 lbf·in.), as shown in **Figure 8-22**.

Copyright © Huawei Technologies Co., Ltd.

Figure 8-22 Tightening nuts

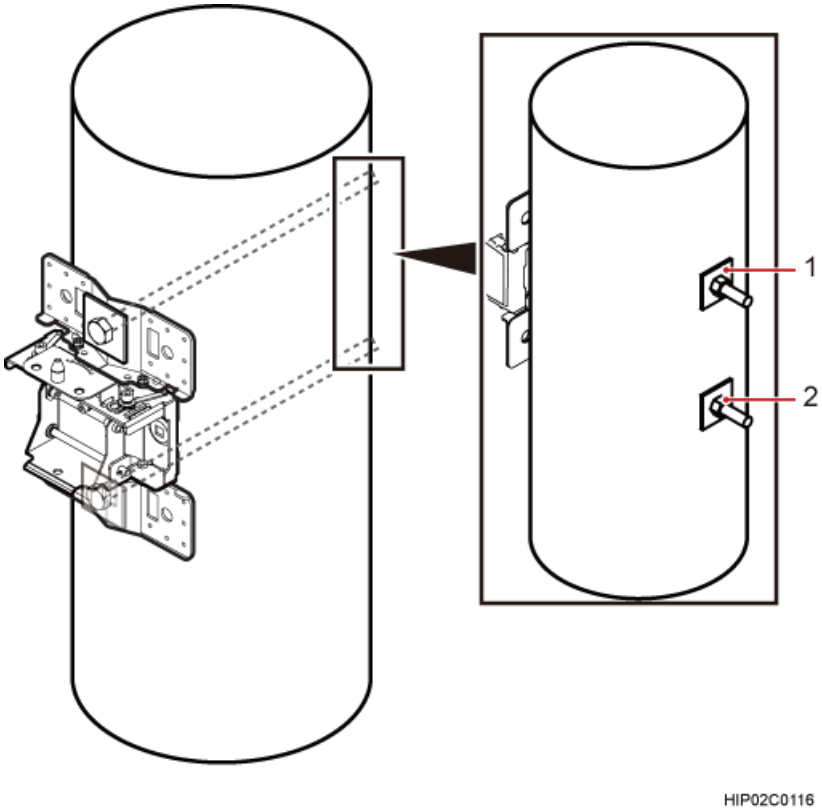

(1) Spacer (2) Nut

Step 5 Install the BTS3902E onto the main mounting bracket vertically. Put the upper positioning pin through the hole on the attachment plate and the lower positioning pin through the hole on the main mounting bracket, pre-tighten the positioning screws, as shown in **Figure 8-23**.

Copyright © Huawei Technologies Co., Ltd.

Figure 8-23 Installing the BTS3902E onto the main mounting bracket

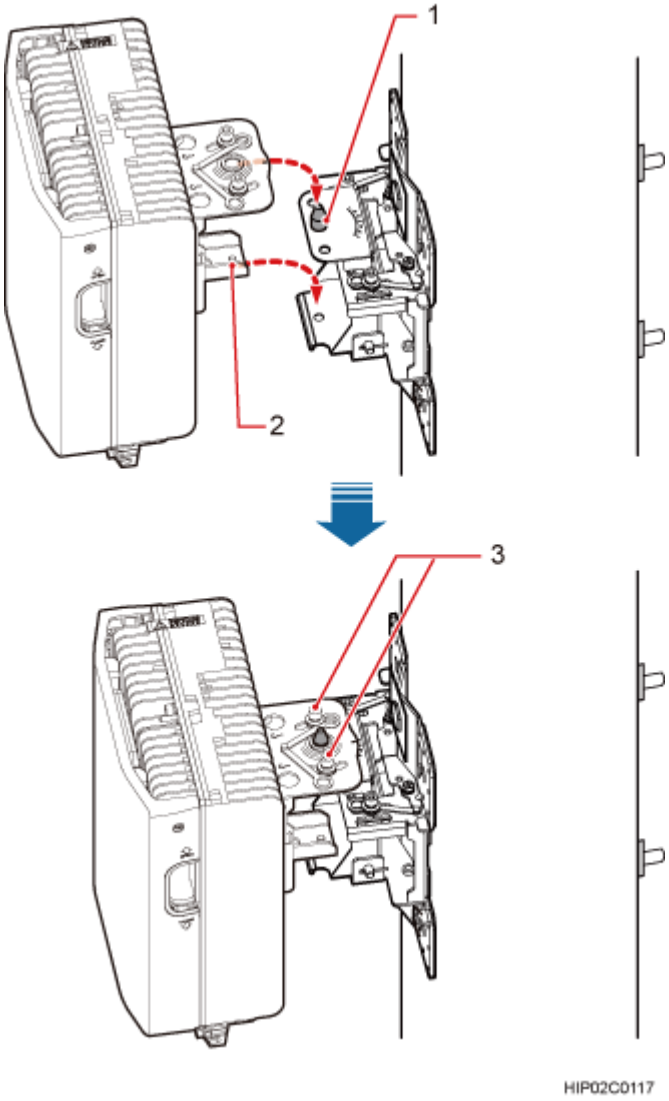

(1) Upper positioning pin (2) Lower positioning pin (3) Positioning screw

Step 6 Adjust the installation angle of the BTS3902E: horizontal angle ±30°, vertical angle ±10°.

NOTE

- If the positioning pin is tightened too hard, the installation angle cannot be adjusted. In this case, loosen the positioning screw first.
- The horizontal angle and vertical angle can be adjusted simultaneously. The vertical angle can be determined either from the plan or elevation view.

- Adjust the horizontal angle.

1. Hold the BTS3902E to adjust the horizontal angle to a proper degree.
2. Use an M8 inner hexagon torque screwdriver to tighten the positioning screw to 12 N·m (106.21 lbf·in.), as shown in **Figure 8-24**.

Copyright © Huawei Technologies Co., Ltd.

Figure 8-24 Adjusting the horizontal angle

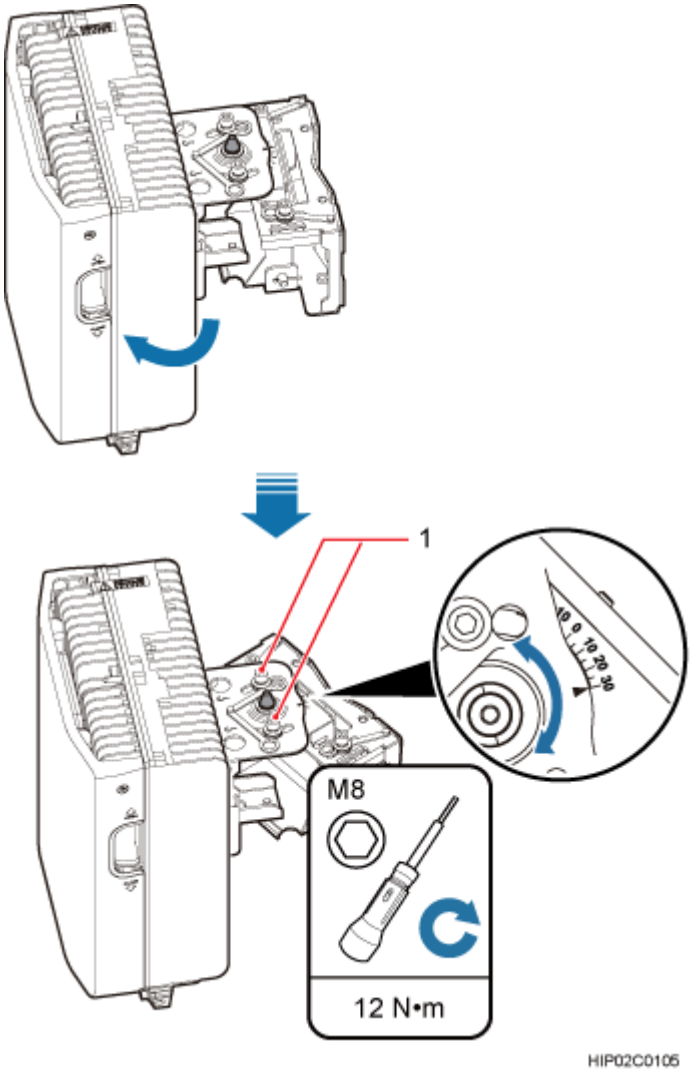

(1) Positioning screw

- Adjust the vertical angle. **Figure 8-25** shows the vertical angle from the plan view. If the vertical angle is from the elevation view, adjust the angle to the opposite direction.

1. Hold the BTS3902E to adjust the vertical angle from the plan view or elevation view to proper degrees.
2. Use an M8 inner hexagon torque screwdriver to tighten the positioning screw to 12 N·m (106.21 lbf·in.).

Huawei Proprietary and Confidential
Copyright © Huawei Technologies Co., Ltd.

Figure 8-25 Adjusting the vertical angle

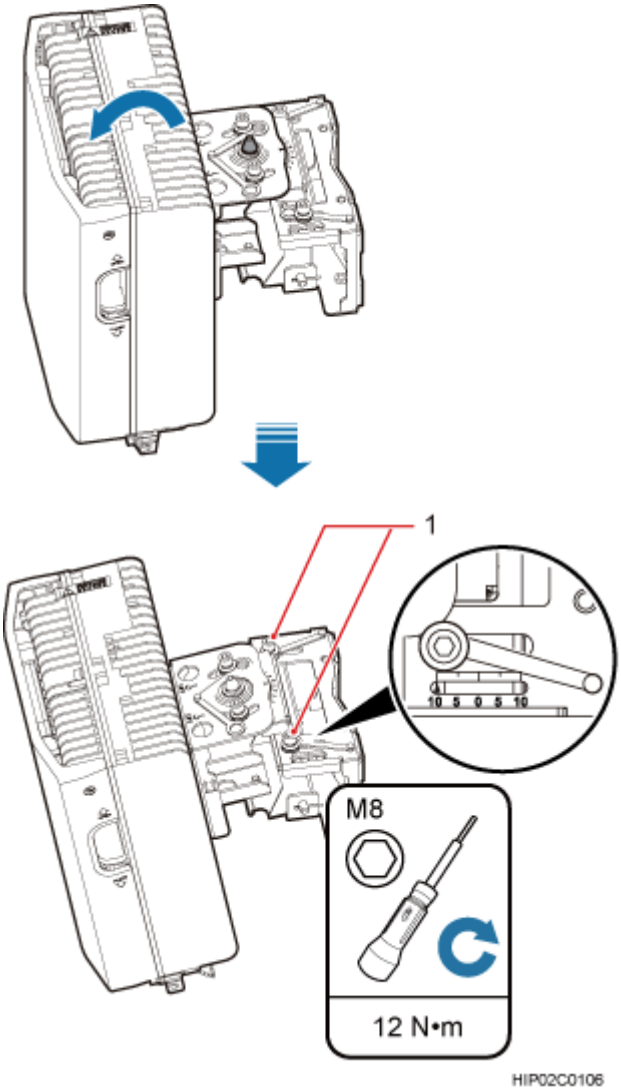

(1) Positioning screw

Step 7 Ensure that the positioning screws both in the vertical direction and horizontal direction have been secured. Tighten the positioning screws in both directions simultaneously.

----End

Huawei Proprietary and Confidential
Copyright © Huawei Technologies Co., Ltd.

9 (Optional) Installing the AC Surge Protection Box and Cables

About This Chapter

This chapter describes the dimensions, installation clearance requirements, and installation options of an AC surge protection box as well as the procedure for installing the surge protection box. The AC surge protection box can be configured when the BTS3902E is installed outdoors. Two types of surge protection boxes SPD60D and SPM60A are available for the BTS3902E.

9.1 Installing the SPD60D and Cables (Working at the 1.9 GHz or 2.1 GHz Frequency Band)
This section describes the dimensions and installation clearance requirements, installation scenarios, and installation process of an SPD60D that is configured for the BTS3902E working at the 1.9 GHz or 2.1 GHz frequency band.

9.2 Installing the SPM60A and Cables (Working at the 850 MHz Frequency Band)
This section describes the dimensions and installation clearance requirements, installation options, and installation process of an SPD60D that is configured for the BTS3902E working at the 850 MHz frequency band.

Copyright © Huawei Technologies Co., Ltd.

9.1 Installing the SPD60D and Cables (Working at the 1.9 GHz or 2.1 GHz Frequency Band)

This section describes the dimensions and installation clearance requirements, installation scenarios, and installation process of an SPD60D that is configured for the BTS3902E working at the 1.9 GHz or 2.1 GHz frequency band.

9.1.1 Dimensions and Installation Clearance Requirements of an SPD60D

This section describes the dimensions and installation clearance requirements for an SPD60D.

Figure 9-1 shows the dimensions of an SPD60D.

Figure 9-1 Dimensions of an SPD60D

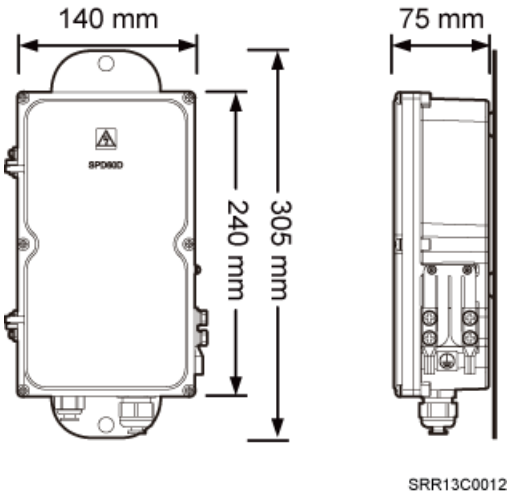

Figure 9-2 shows the recommended installation clearance for an SPD60D.

Copyright © Huawei Technologies Co., Ltd.

Figure 9-2 Recommended installation clearance for an SPD60D

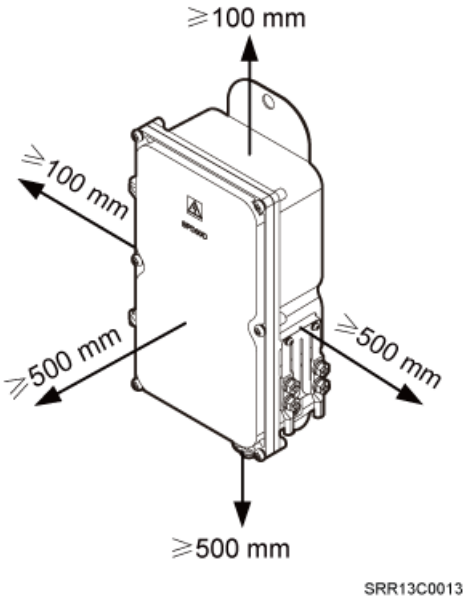

Figure 9-3 shows the minimum installation clearance for an SPD60D.

Figure 9-3 Minimum installation clearance for an SPD60D

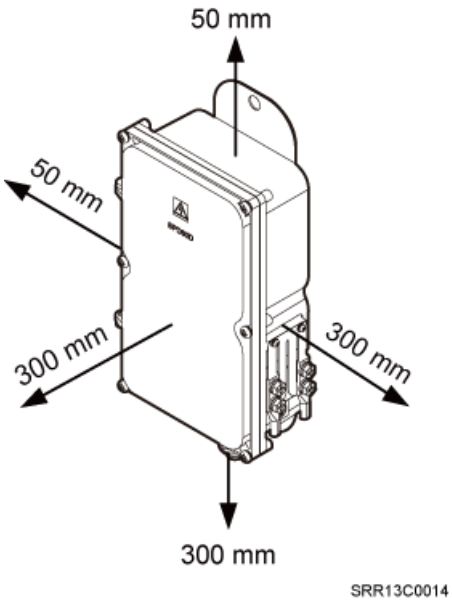

9.1.2 Installation Options of an SPD60D

This section describes installation options of an SPD60D. An SPD60D can be installed on a pole, wall, or wood pole.

Copyright © Huawei Technologies Co., Ltd.

Installing an SPD60D on a Pole with the Diameter of 60 mm to 114 mm (2.36 in. to 4.49 in.)

Figure 9-4 shows the diameter of a pole for installing an SPD60D.

Figure 9-4 Diameter of a pole

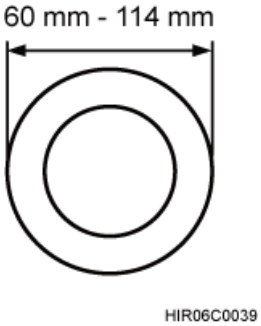

Figure 9-5 shows an SPD60D installed on a pole.

Figure 9-5 An SPD60D installed on a pole

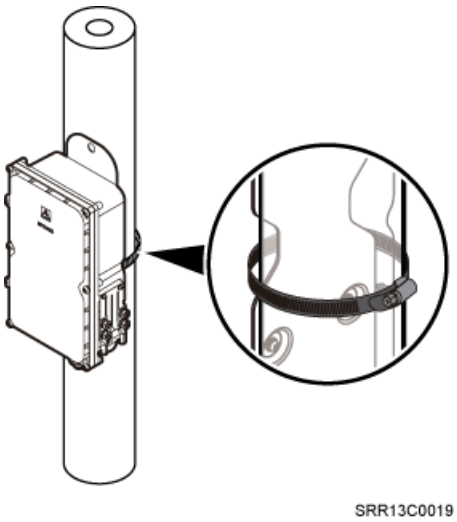

Installing an SPD60D on a Pole with the Diameter of 114 mm to 400 mm (4.49 in. to 15.75 in.)

Figure 9-6 shows the diameter of a pole for installing an SPD60D.

Copyright © Huawei Technologies Co., Ltd.

Figure 9-6 Diameter of a pole

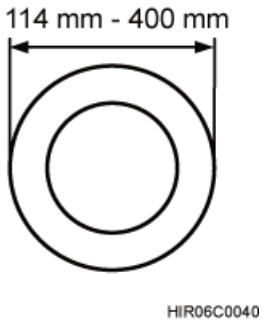

Figure 9-7 shows an SPD60D installed on a pole.

Figure 9-7 An SPD60D installed on a pole

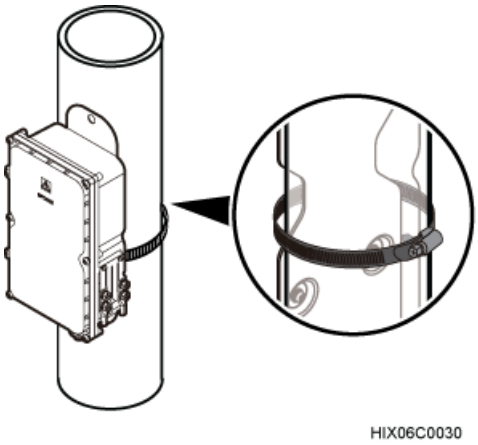

Installing an SPD60D on a Wall

Figure 9-8 shows an SPD60D installed on a wall.

Copyright © Huawei Technologies Co., Ltd.

Figure 9-8 An SPD60D installed on a wall

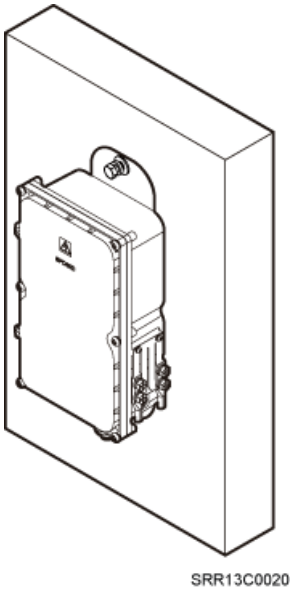

Installing an SPD60D on a Wood Pole with the Diameter of 200 mm to 400 mm (7.87 in. to 15.75 in.)

Figure 9-9 shows the diameter of a wood pole for installing an SPD60D.

Figure 9-9 Diameter of a pole

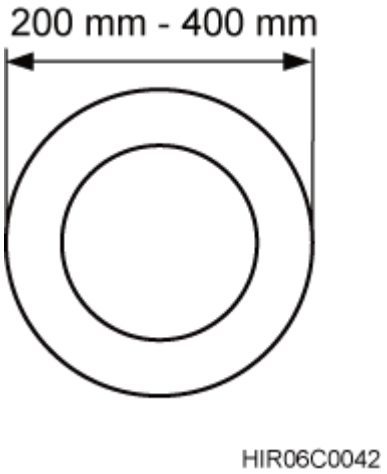

Figure 9-10 shows an SPD60D installed on a wood pole.

Copyright © Huawei Technologies Co., Ltd.

Figure 9-10 An SPD60D installed on a wood pole

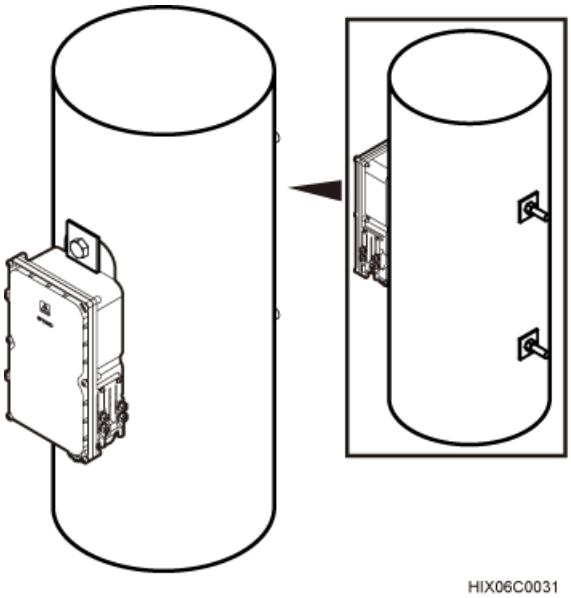

9.1.3 Installing an SPD60D

This section describes the procedure for installing an SPD60D.

Procedure

- Install an SPD60D on a pole, as shown in **Figure 9-11**.

  NOTE

  - When the diameter of the pole ranges from 60 mm to 114 mm (2.36 in. to 4.49 in.), the hose clamps delivered with theSPD60D is used.
  - When the diameter of the pole ranges from 114 mm to 400 mm (4.49 in. to 15.75 in.), the hose clamps purchased locally is used.

Figure 9-11 Installing the SPD60D on a pole

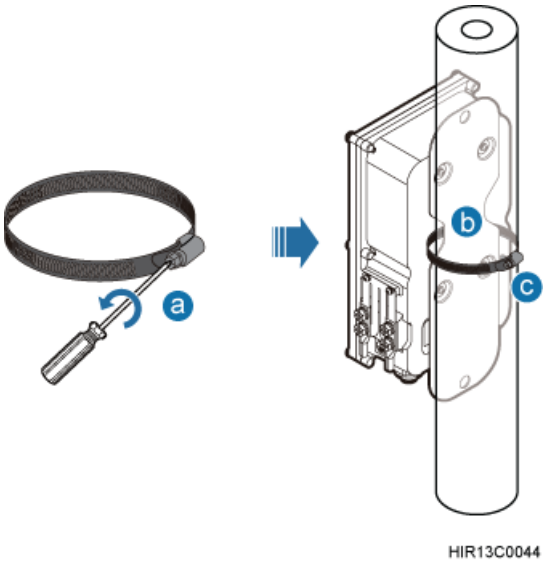

Copyright © Huawei Technologies Co., Ltd.

1. Loosen the hose clamp.
2. Lead the clamp through the gap between the rear mounting plate and the case of the SPD60D.
3. Install the hose clamp around the pole, and tighten the screw to 4.5 N·m (39.83 lbf·in.) to secure the clamp.

NOTE

If the diameter of the pole around which the clamp is installed is small, cut the extra part of the clamp.

- Install an SPD60D on a wall.
  1. Place the rear mounting plate of the SPD60D against the wall, use a level to verify that the plate is horizontal, and then mark anchor points using a marker, as shown in **Figure 9-12**.

     Figure 9-12 Marking the anchor points

     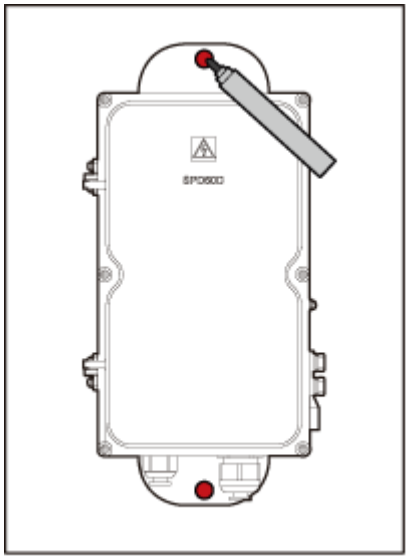

  2. Use a hammer drill with a Ø14 bit to drill holes at the anchor points, and install expansion bolts, as shown in **Figure 9-13**.

     NOTE

     After disassembling the expansion bolt assemblies, discard the plastic tubes.

Copyright © Huawei Technologies Co., Ltd.

Figure 9-13 Installing an expansion bolt

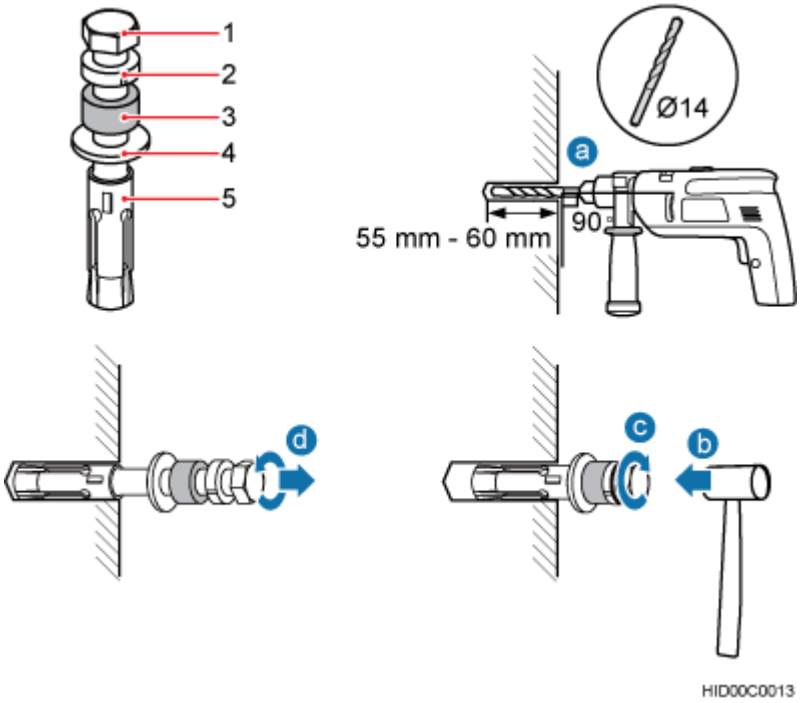

(1) M10x65 bolt (2) Spring washer 10 (3) Plastic tube (4) Flat washer 10 (5) Expansion tube

3. Align the SPD60D with the holes in the wall, and tighten the expansion bolts to 30 N·m (265.52 lbf·in.), as shown in **Figure 9-14**.

Figure 9-14 Installing an SPD60D

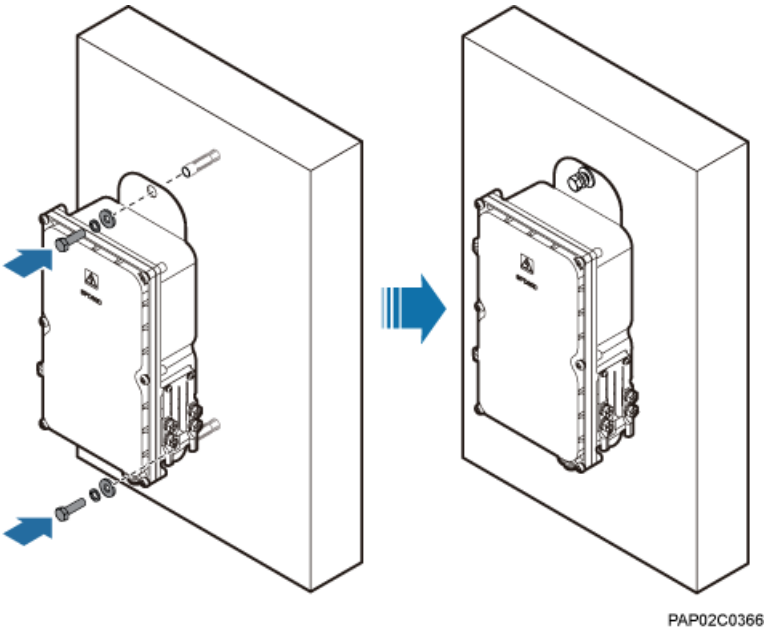

- Install an SPD60D on a wood pole.

Copyright © Huawei Technologies Co., Ltd.

1. Place the rear mounting plate of the SPD60D against the wood pole, determine the anchor points on the middle axis, and then mark the anchor points.
2. Drill holes with the diameter of 12 mm (0.47 in.) at the anchor points through the wood pole, as shown in **Figure 9-15**.

Figure 9-15 Drilling holes

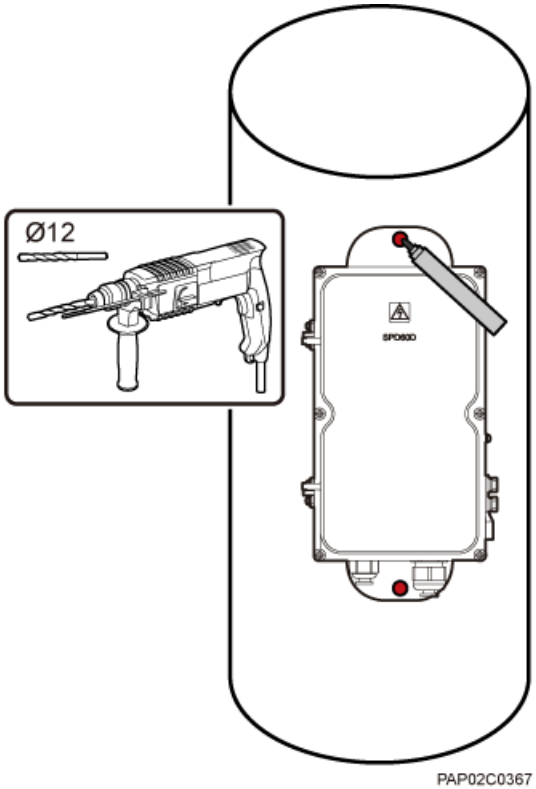

3. Align the SPD60D with the holes in the wood pole, lead the two long M10 bolts with spacers through the two mounting holes and holes, and then install the bolts on the wood pole, as shown in **Figure 9-16**.

Copyright © Huawei Technologies Co., Ltd.

Figure 9-16 Installing the SPD60D on the wood pole

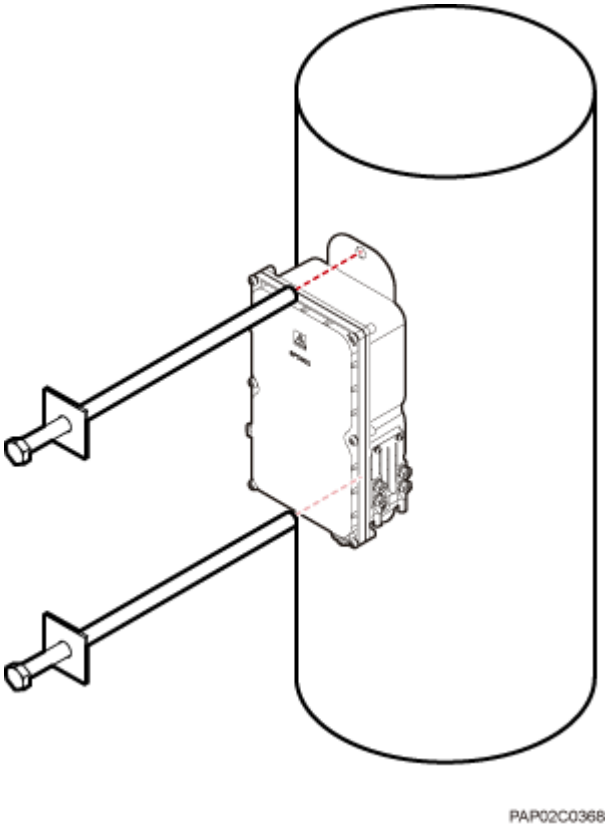

4. Tighten the nuts to 30 N·m (265.52 lbf·in.), as shown in **Figure 9-17**.

Copyright © Huawei Technologies Co., Ltd.

Figure 9-17 Tightening the nuts

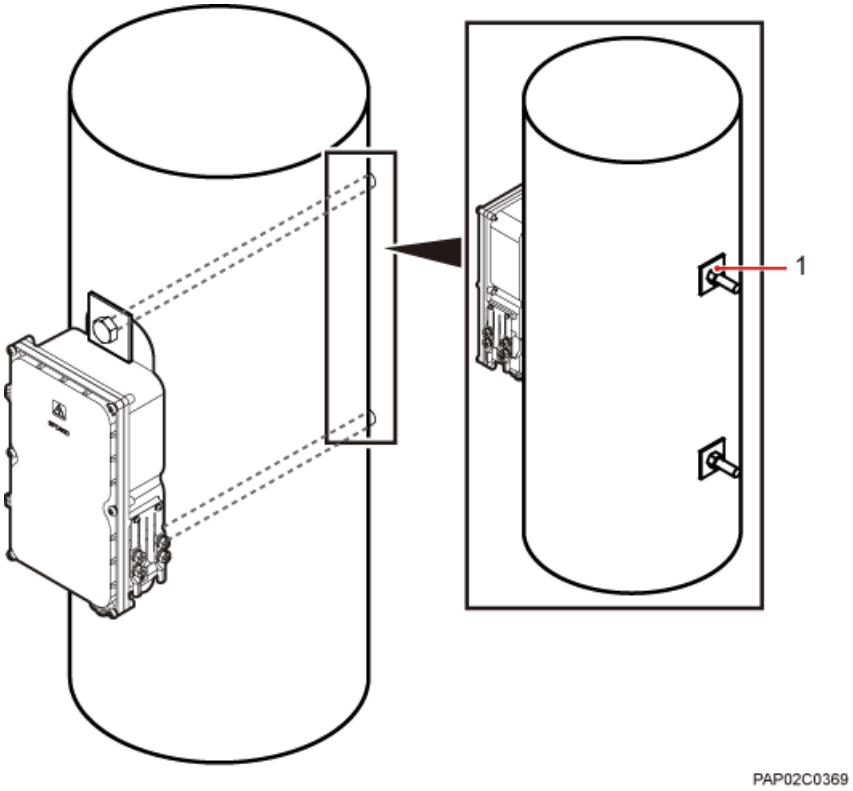

(1) Nut

----End

9.1.4 Installing Cables for an SPD60D

This section describes the procedure for installing cables for an SPD60D.

Prerequisites

Prepare OT terminals for connecting one end of a power cable to an SPD60D. For details, see **14.1.1 Preparing OT Terminals of the AC Input Power Cable to the SPD60D**.

Procedure

Step 1 Loosen the screws on the SPD60D using the M4 Phillips screwdriver and open the cover plate. Then, remove the thread-lock sealing nut from the PG connector of the surge protection box, and discard waterproof blocks, as shown in **Figure 9-18**.

Copyright © Huawei Technologies Co., Ltd.

Figure 9-18 Opening the cover plate of the SPD60D

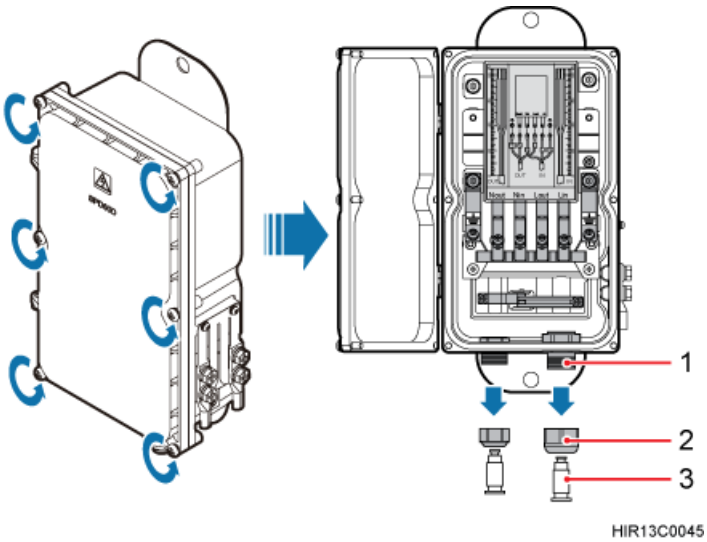

(1) PG connector (2) Thread-lock sealing nut of the PG connector (3) Waterproof block

NOTE

Do not use the removed thread-lock sealing nut of the PG connector with the thread-lock sealing nuts on other surge protection boxes.

Step 2 Glide the thread-lock sealing nut and then the PG connector over the power cable.

Step 3 Connect power cables to the SPD60D, as shown in **Figure 9-19**. Connect the power cable between the BTS3902E and the surge protection box to the port on the left, and the power cable between the surge protection box and the external power equipment to the port on the right.

Copyright © Huawei Technologies Co., Ltd.

Figure 9-19 Cable connections of an SPD60D

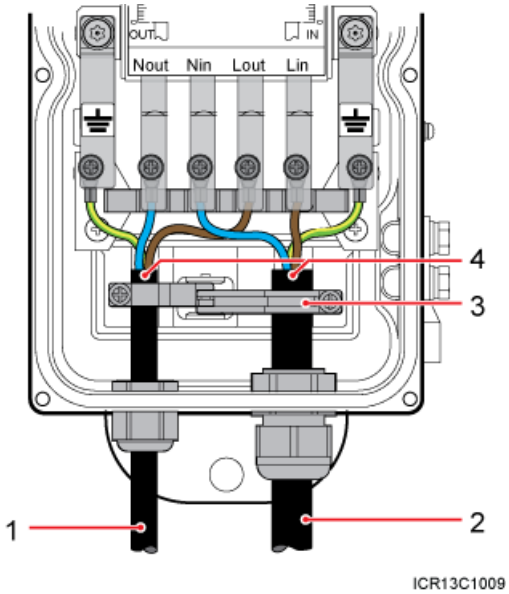

(1) Power cable between the BTS3902E and the surge protection box (2) Power cable between the surge protection box and the external power equipment (3) Clip (4) Insulation layer

1. Lead the power cable between the surge protection box and the external power equipment through the PG connector labeled IN. Connect the OT terminals of the blue, brown, and yellow/green core wires to the Lin, Nin, and GND ports on the surge protection box respectively.
2. Lead the power cable between the BTS3902E and the SPD60D through the PG connector labeled OUT. Connect the OT terminals of the blue, brown, and yellow/green core wires to the Nout, Lout, and GND ports on the surge protection box respectively.
3. Tighten the thread-lock sealing nut of the PG connector, and then use a torque wrench to tighten the PG connector to ensure proper waterproofing.
   - Tighten the PG connector of the power cable between the power module of the BTS3902E and the surge protection box to 1.2 N·m (10.62 lbf·in.).
   - Tighten the PG connector of the power cable between the surge protector and the external power equipment to 1.5 N·m (13.28 lbf·in.).

Step 4 Fasten the power cables using clips.

NOTE

Ensure that the insulation layer of each power cable is fastened using clips.

Step 5 Close the cover plate of the surge protection box and tighten the screw to 1.4 N·m (12.39 lbf.in.) using an M4 Phillips screwdriver, as shown in **Figure 9-20**.

Copyright © Huawei Technologies Co., Ltd.

Figure 9-20 Closing the cover plate of the SPD60D

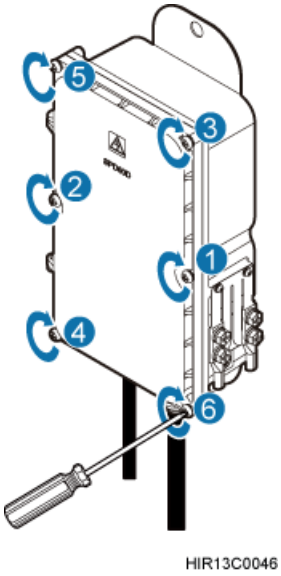

Step 6 Wrap waterproof tape and then PVC insulation tape around both ends of each power cable and connectors between corrugated pipes, as shown in **Figure 9-21**.

NOTE

- Before wrapping the waterproof tape, stretch the tape evenly until the length of the tape is twice its original length.
- Before wrapping the PVC insulation tape, do not stretch the PVC insulation tape.
- Ensure that each layer of tape overlaps more than 50% of the preceding layer. Stretch and press the tape tightly to avoid wrinkles or spaces. Ensure that the tape is tightly wrapped and stuck and will not fall off.
- Ensure that the adhesive surface of the tape overlaps the lower layer.
- Cutting the cable ties at the position of 3 mm (0.12 in.) to 5 mm (0.20 in.) far from the head.

Copyright © Huawei Technologies Co., Ltd.

Figure 9-21 Fastening AC power cables

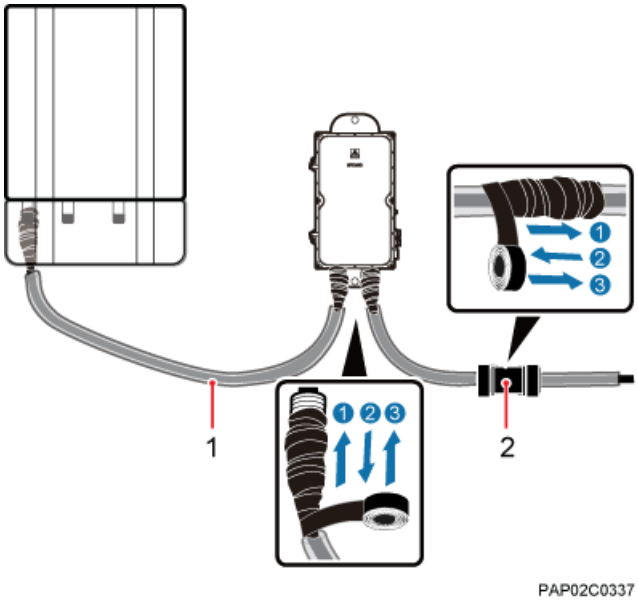

(1) Corrugated pipe (2) Connector between corrugated pipes

Step 7 Bind the cables using cable ties at equal spacing of 30 cm (11.81 in.) and verify that the bend radius of the corrugated pipe is not less than 60 mm (2.36 in.).

Step 8 Install the equipotential cable and PGND cable, as shown in **Figure 9-22**.

Copyright © Huawei Technologies Co., Ltd.

Figure 9-22 Installing a PGND Cable and an Equipotential Cable

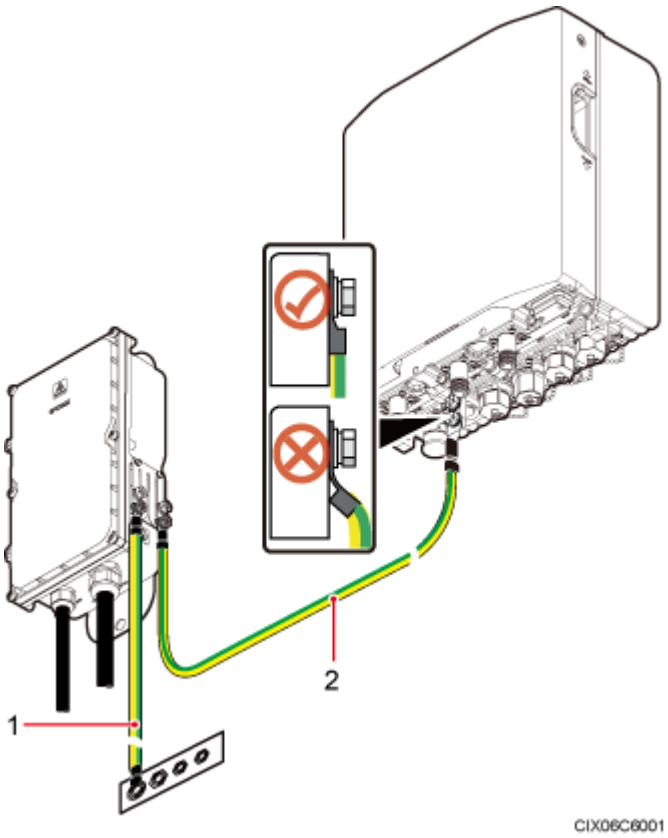

(1) PGND cable (2) Equipotential cable

----End

9.2 Installing the SPM60A and Cables (Working at the 850 MHz Frequency Band)

This section describes the dimensions and installation clearance requirements, installation options, and installation process of an SPD60D that is configured for the BTS3902E working at the 850 MHz frequency band.

9.2.1 Dimensions and Installation Clearance Requirements of an SPM60A

This section describes the dimensions and installation clearance requirements for an SPM60A.

Figure 9-23 shows the dimensions of an SPM60A.

Copyright © Huawei Technologies Co., Ltd.

Figure 9-23 Dimensions of an SPM60A

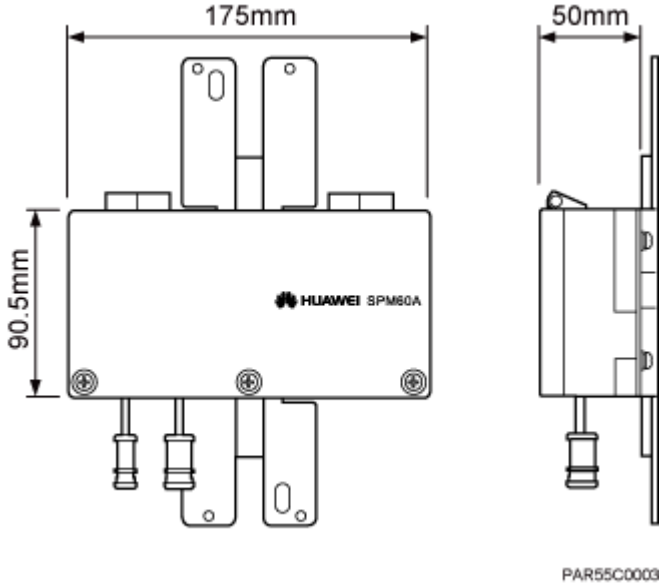

Figure 9-24 shows the recommended installation clearance for an SPM60A.

Figure 9-24 Recommended installation clearance for an SPM60A

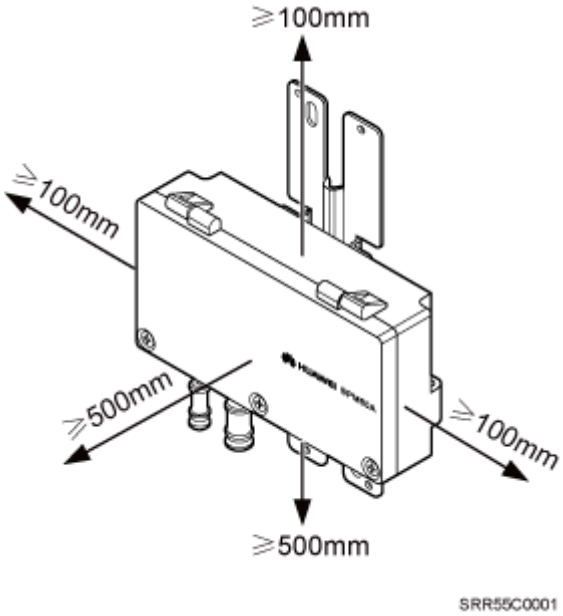

Figure 9-25 shows the minimum installation clearance for an SPM60A.

Copyright © Huawei Technologies Co., Ltd.

Figure 9-25 Minimum installation clearance for an SPM60A

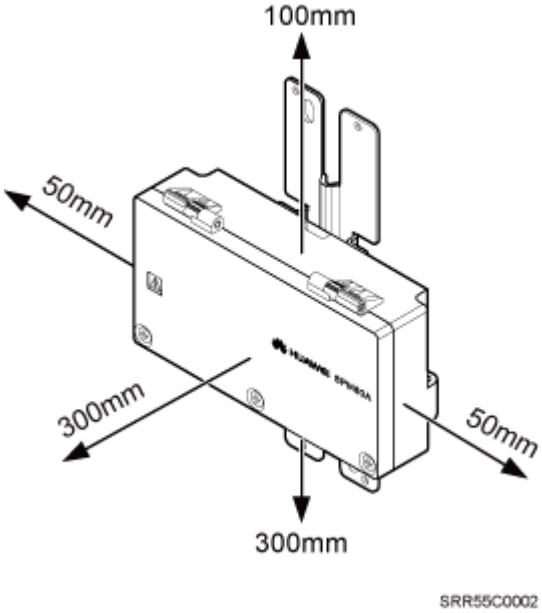

9.2.2 Installation Options of an SPM60A

This section describes installation options of an SPM60A. An SPM60A can be installed on a pole, or wall.

Installing an SPM60A on a Pole

Figure 9-26 shows an SPM60A installed on a pole.

Figure 9-26 An SPM60A installed on a pole

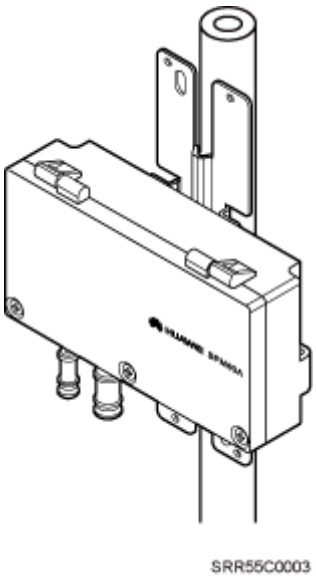

Copyright © Huawei Technologies Co., Ltd.

Installing an SPM60A on a Wall

Figure 9-27 shows an SPM60A installed on a wall.

Figure 9-27 An SPM60A installed on a wall

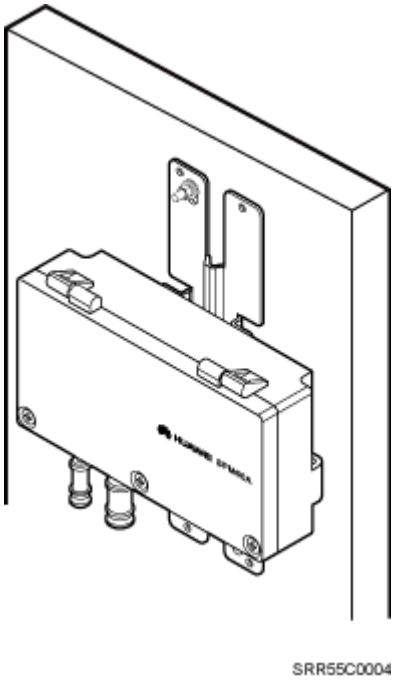

9.2.3 Installing an SPM60A

This section describes the procedure for installing an SPM60A.

Procedure

- Installing an SPM60A on a Pole.
  1. Loosen the screws on the hose clamp using an M6 hex torque screwdriver and open the cover plate of SPM60A.
  2. Put the hose clamp through the gap between the back cover plate and box body of SPM60A and install the clamp holder.
  3. Tighten the hose clamp and close the cover plate.
  4. Tighten the screws on the hose clamp using an M6 hex torque screwdriver to 5 N m.

     Figure 9-28 shows an SPM60A installed on a pole.

Copyright © Huawei Technologies Co., Ltd.

Figure 9-28 Installing SPM60A on a pole

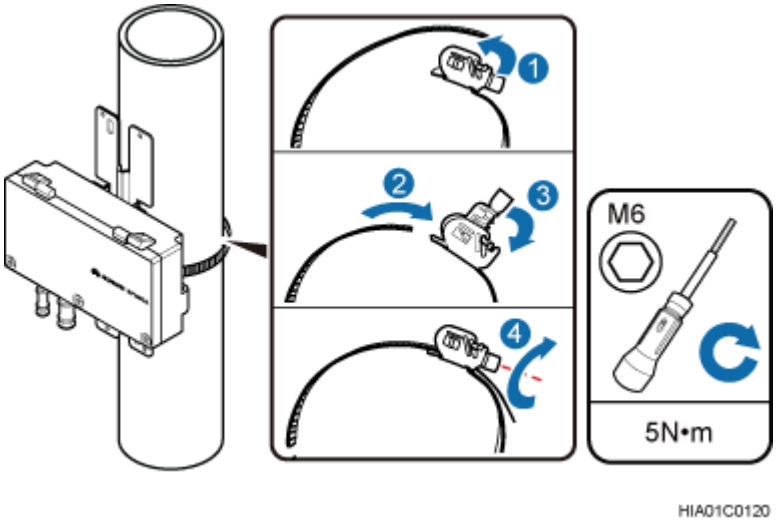

NOTE

If the diameter of the pole is small, cut off the redundant part of the hose clamp.

- Install an SPM60A on a wall.
  1. The installation position on the wall has been determined. Press the back plate of the SPM60A tightly on the wall, adjust and check the position using a level, and mark the exact installation position using a marker, as shown in **Figure 9-29**.

Figure 9-29 Marking the installation position

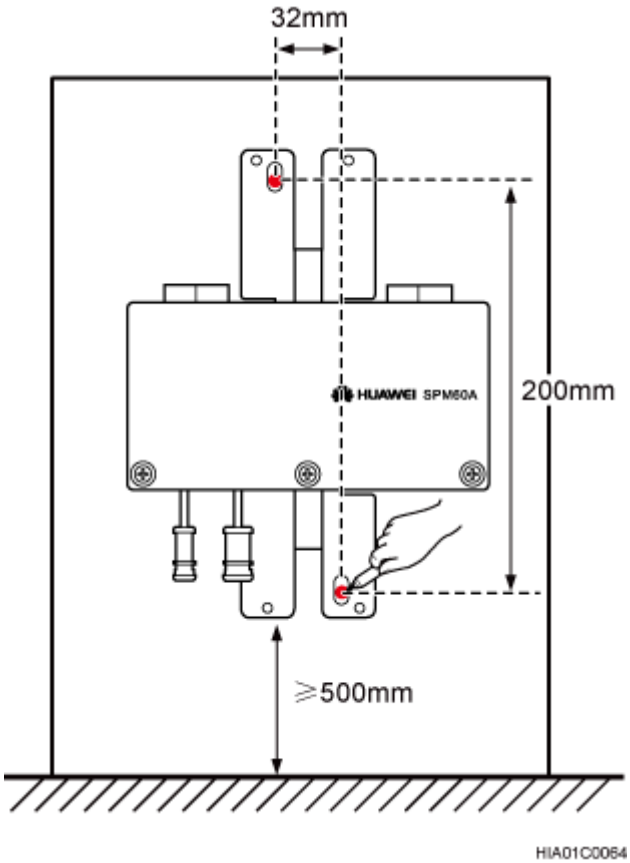

Huawei Proprietary and Confidential
Copyright © Huawei Technologies Co., Ltd.

CAUTION

Operators need to take appropriate protective measures to prevent dust from being taken into the respiratory tract or fallen into eyes.

2. Drill holes at the marked points and install expansion anchor bolts, as shown in **Figure 9-30**.
   a. Drill holes vertically at the marked points on the wall using a hammer drill (φ 8 mm). The holes are 50 to 60 mm in depth.
   b. Sightly tighten the expansion anchor bolt and put it into the hole.
   c. Use a rubber mallet to knock the expansion anchor bolt until the expansion sleeve is totally in the hole.
   d. Tighten the expansion anchor bolt and then screw off the screw, spring washer, and plain washer.

NOTICE

Disassemble the expansion anchor bolt and ensure that the upper surface of the expansion sleeve is flush with the wall. Otherwise, the SPM60A is unsteady on the wall.

Figure 9-30 Drilling and installing expansion anchor bolt

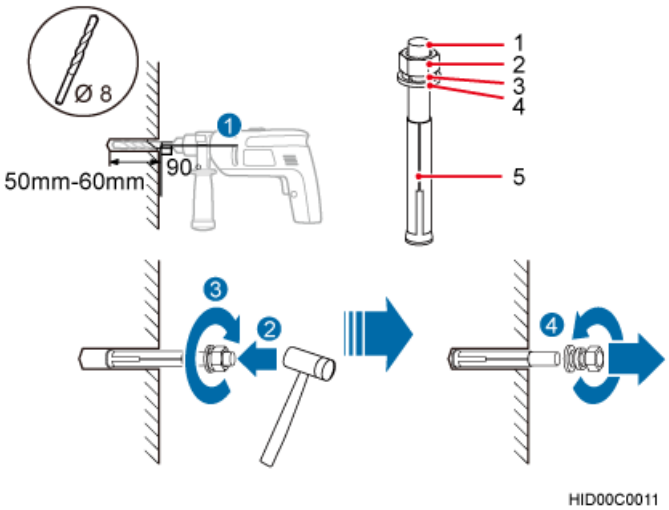

(1) M6 bolt (2) Nut (3) Spring washer (4) Plain washer (5) Expansion sleeve

3. Put the two bolts into the two holes on the SPM60A mounting kit, install the plain washer, spring washer, and nut, and tighten the nut to 30 N m using the M6 torque wrench with an opening of 10 mm, as shown in **Figure 9-31**.

Copyright © Huawei Technologies Co., Ltd.

Figure 9-31 Installing an SPM60A on a wall

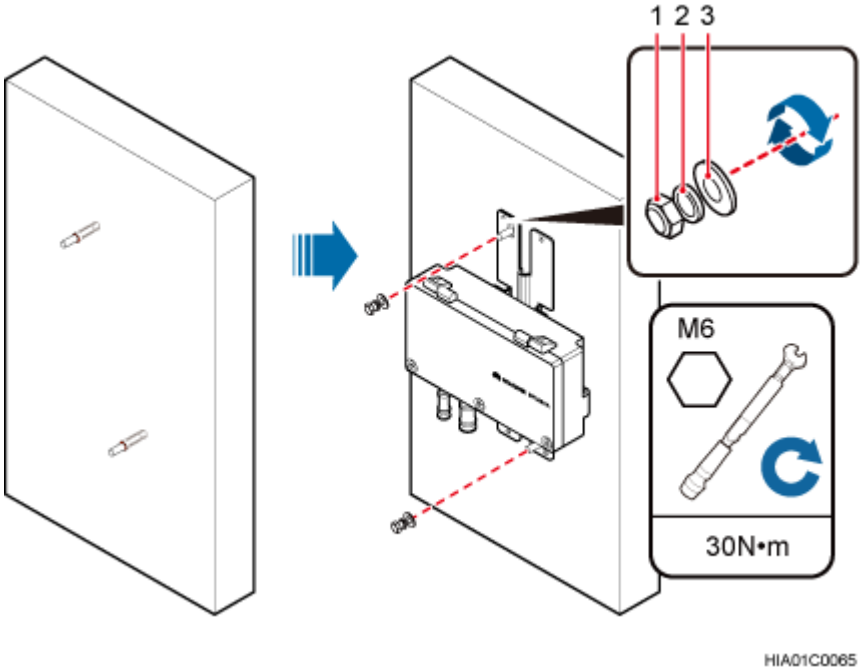

(1) Nut (2) Spring washer (3) Plain washer

----End

9.2.4 Installing Cables for an SPM60A

This section describes the procedure for installing cables for an SPM60A.

Prerequisites

Prepare OT terminals for connecting one end of a power cable to an SPM60A. For details, see **14.1.2 Preparing OT Terminals to the Power Cable Connected to the SPM60A** .

Procedure

Step 1 Wear ESD gloves.

NOTICE

Take proper ESD protection measures, for example, wear ESD gloves, to prevent electrostatic damage to the boards or electronic components.

Step 2 Use an M5 Phillips screwdriver to loosen the screws on the SPM60A and open the cover plate to a 120° position, as shown in **Figure 9-32**.

Copyright © Huawei Technologies Co., Ltd.

Figure 9-32 Opening the SPM60A cover plate

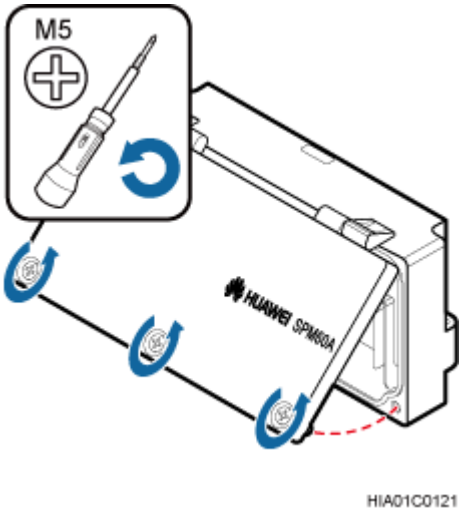

NOTICE

Open the cover plate slowly with care. When you feel the cover plate getting stuck, leave hold of the cover plate carefully if the cover plate does not close.

Step 3 Take out the waterproof block from SPM60A, as shown in **Figure 9-33**.

Figure 9-33 Taking out the waterproof block

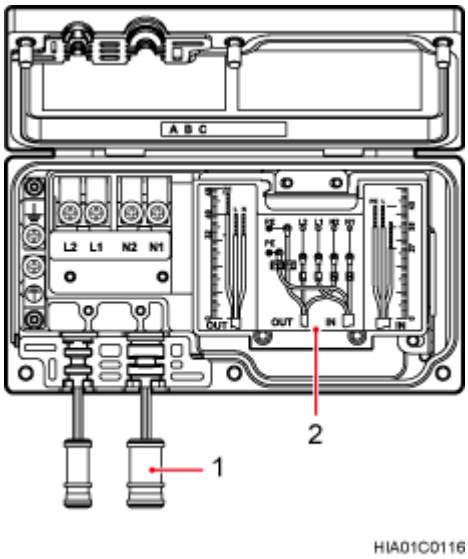

(1) Waterproof block	(2) Surge protector

Copyright © Huawei Technologies Co., Ltd.

Step 4 Connect one end of the power cable to SPM60A and the other end to protected equipment. Put the power cable between SPM60A and protected equipment through the OUT cable hole in the SPM60A, and connect the brown wire with an OT terminal to the L2 terminal, the blue wire with an OT terminal to the N2 terminal, and the yellow-green wire with an OT terminal to the ground terminal. Use an M4 torque screwdriver to tighten the screws on the terminals to 1.4 N·m, as shown in **Figure 9-34**.

Figure 9-34 SPM60A connections

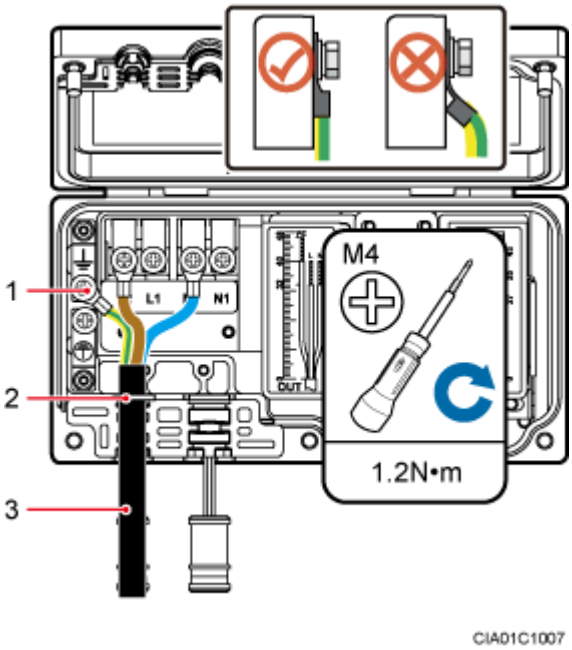

(1) Ground terminal	(2) Cable hole	(3) Power cable connecting an SPM60A and protected equipment.

NOTICE

- Arrange the internal cables. Bending OT terminals is not allowed.
- The cable stripping length must be strictly in accordance with the cable diagram on labels.

Step 5 Put the power cable between the power equipment and SPM60A through the IN cable hole in the SPM60A, and connect the brown wire with an OT terminal to the L1 terminal, the blue wire with an OT terminal to the N1 terminal, and the yellow-green wire with an OT terminal to the ground terminal. Use an M4 torque screwdriver to tighten the screws on the terminals to 1.2 N·m, as shown in **Figure 9-35**.

Copyright © Huawei Technologies Co., Ltd.

Figure 9-35 SPM60A connections

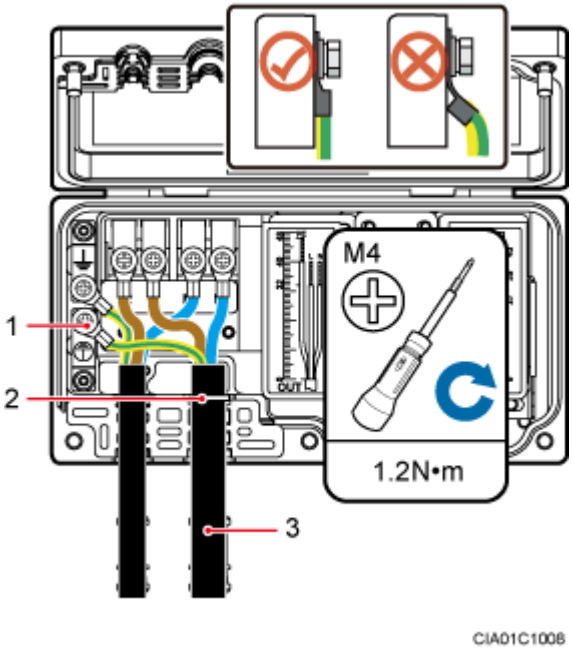

(1) Ground terminal	(2) Cable hole	(3) Power cable connecting the AC power equipment and SPM60A

NOTICE

- Arrange the internal cables. Bending OT terminals is not allowed.
- The cable stripping length must be strictly in accordance with the cable diagram on labels.

Step 6 Use an M5 torque screwdriver to tighten the screws on the SPM60A cover plate to 2.0 N m and close the cover plate, as shown in **Figure 9-36**.

Copyright © Huawei Technologies Co., Ltd.

Figure 9-36 Closing the SPM60A cover plate

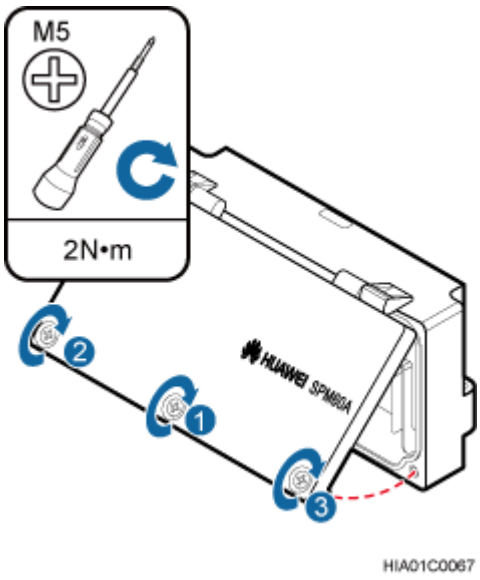

NOTE

All screws must be tightened for the second time.

Step 7 Wrap the waterproof tape and then the PVC insulation tape around both ends of each power cable and around the connectors between corrugated pipes. Use two cable ties to bind the PVC insulation tape at the position 3 mm to 5 mm away from both ends, as shown in **Figure 9-37**.

1. Wrap three-layer waterproof tape from bottom to top, from top to bottom, and then from bottom to top again. Compact the tape and ensure that it is waterproof.
2. Wrap three-layer PVC insulation tape from bottom to top, from top to bottom, and then from bottom to top again. Compact the tape and ensure that it is waterproof.
3. Use cable ties to bind the PVC insulation tape at the position 3 mm to 5 mm away from both ends to prevent aging.

NOTE

- Before wrapping waterproof tape, stretch the tape evenly until the length of the tape becomes twice its original length.
- Do not stretch the PVC insulation tape when wrapping.
- Wrap each layer of tape around the connector tightly and neatly, and ensure that each layer of tape overlaps more than 50% of the preceding layer. Ensure that neighboring layers are stuck to each other.
- Ensure that the adhesive surface of the tape overlaps the preceding layer.
- When cutting off the cable ties, reserve a redundant length of 3 mm to 5 mm.

Copyright © Huawei Technologies Co., Ltd.

Figure 9-37 Securing power cables

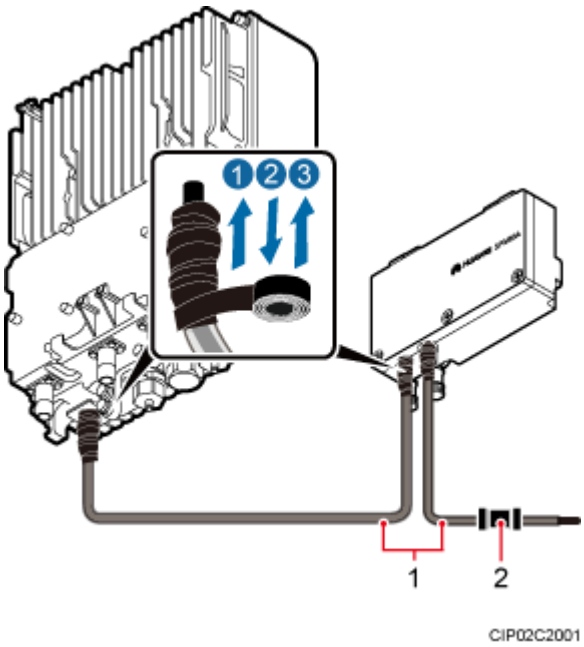

(1) Corrugated pipe	(2) Connector between corrugated pipes

Step 8 Use cable ties to bind the cables at equal spacing of 30 cm and verify that the bending radius of the corrugated pipe is equal to or more than 60 mm.

Step 9 Laying Out Equipotential Cables and Protective Ground Cables, as shown in **Figure 9-38**.

Huawei Proprietary and Confidential
Copyright © Huawei Technologies Co., Ltd.

Figure 9-38 Laying Out Equipotential Cables and Protective Ground Cables

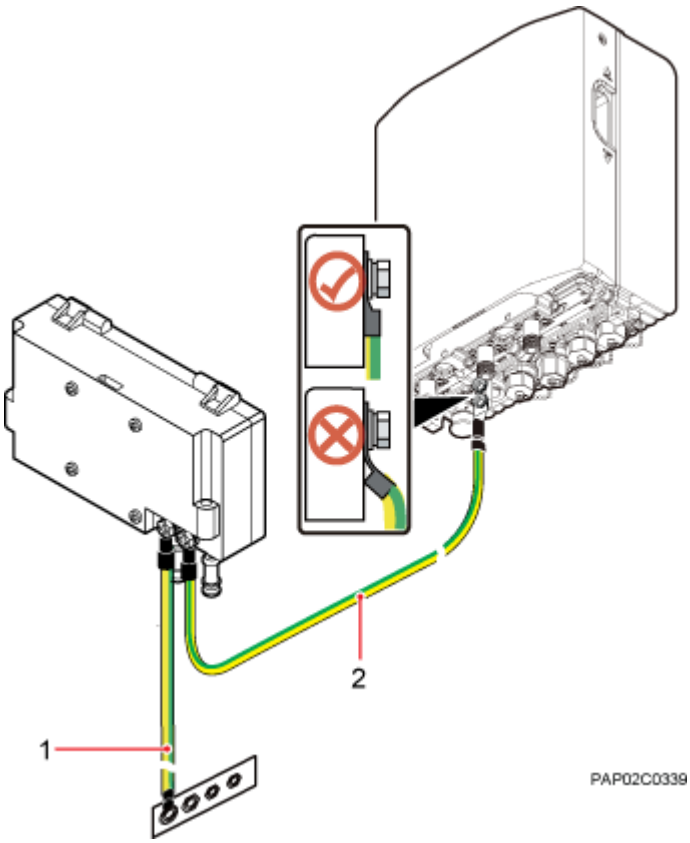

(1) Protective ground cable	(2) Equipotential cable

Step 10 Lay out cables according to **10.1 Cabling Requirements** and clamp the cables.

Step 11 Label the cables according to Attaching a Cable-Tying Label.

Step 12 Take off the ESD gloves, and pack up all the tools.

----End

Copyright © Huawei Technologies Co., Ltd.

10 Installing Cables

About This Chapter

This chapter describes the procedures and precautions for installing the PGND cables, power cables, and transmission cables for BTS3902Es installed in various scenarios. It also describes the procedures and precautions for installing an optional alarm cable.

10.1 Cabling Requirements
Cables must be routed according to the specified cabling requirements to prevent signal interference.

10.2 Cable Connections
The cable connections of the BTS3902E vary depending on the number of BTS3902Es and the BTS3902E port.

10.3 Installing a PGND Cable and Equipotential Cable
The protection ground (PGND) cable and equipotential cable must be installed based on actual requirements.

10.4 Installing a BTS3902E Power Cable
A BTS3902E power cable connects the BTS3902E to an external power device, feeding external power into the BTS3902E.

10.5 Installing Transmission Cables
A fast Ethernet or gigabit Ethernet (FE/GE) cable or FE/GE fiber optic cable must be installed for BTS3902Es as required.

10.6 (Optional) Installing a BTS3902E RF Jumper
You must install a radio frequency (RF) jumper when a BTS3902E uses an external antenna.

10.7 (Optional) Installing the Alarm Cable
This section describes the procedure for installing a BTS3902E alarm cable.

Copyright © Huawei Technologies Co., Ltd.

10.1 Cabling Requirements

Cables must be routed according to the specified cabling requirements to prevent signal interference.

NOTE

If a cable listed below is not required, skip the routing requirements of the cable.

General Cabling Requirements

The bending radius of the cables must meet the following specifications:

- The bending radius of the 7/8" feeder must be more than 250 mm (9.84 in.), and the bending radius of the 5/4" feeder must be more than 380 mm (14.96 in.).
- The bending radius of the 1/4" jumper must be more than 35 mm (1.38 in.). The bending radius of the super-flexible 1/2" jumper must be more than 50 mm (1.97 in.), and the bending radius of the ordinary 1/2" jumper must be more than 127 mm (5 in.).
- The bending radius of the power cable or PGND cable must be at least three times the diameter of the cable.
- The bending radius of an fiber optic cable is at least 20 times the diameter of the fiber optic cable.
- The bending radius of the signal cable must be at least five times the diameter of the cable.

The cables must be bound as follows:

- The cables must be bound tightly and neatly. The sheaths of the cables must not be damaged.
- The cable ties must face the same direction, and those at the same horizontal line must be in a straight line. Extra length of cable ties must be cut.
- Labels or nameplates must be attached to the cables after they are installed.

The cables must be routed as follows:

- Different types of cables must be installed in an untangled and orderly fashion.
- Different types of cables must be routed in parallel or separated by special objects.

Special Cabling Requirements

Cabling requirements for power cables are as follows:

- Multiple power cables must be bound when routed.
- Power cables must be installed in the position specified in engineering design documents.
- If the length of power cables is insufficient, replace the cables rather than adding connectors or soldering joints to lengthen the cables.

Cabling Requirements for PGND Cables are as follows:

- PGND cables for the base station must be connected to the same ground bar.
- PGND cables must be buried in the ground or routed indoors. They should not be routed overhead before they are led into the equipment room.

Copyright © Huawei Technologies Co., Ltd.

- The exterior of the coaxial wire and the shield layer of the shielded cable must have proper electrical contact with the metal surface of the equipment to which they are connected.
- PGND cables and signal cables must be installed in an untangled and orderly fashion. A certain distance must be reserved between them to prevent interference from each other.
- Fuses or switches must not be installed on the PGND cables.
- Other devices must not be used for electrical connections of the PGND cables.
- All the metal parts in the housing of the equipment must be reliably connected to the ground terminal.

Cabling Requirements for E1 Cables are as follows:

- E1 cables must not cross power cables, PGND cables, or RF cables when routed. If transmission cables are routed with power cables, PGND cables, or RF cables in parallel, the spacing between them must be greater than 30 mm (1.18 in.).
- E1 cables are routed straightly and bound neatly with cable ties.
- Sufficient slack is provided in E1 cables at turns.

Cabling Requirements for Fiber Optic Cables are as follows:

- Fiber optic cables must be routed by at least three qualified and trained personnel before all preparations are made.
- Fiber optic cables are used within the temperature range of -40°C to +60°C. If the current temperature is out of the range, make protection measures or route the cables again.
- Cables are routed in an untangled and orderly fashion.
- Do not bind fiber optic cables at turns.
- Do not stretch, step on, or place heavy objects on fiber optic cables. Keep the cables away from sharp objects.
- When fiber optic cables are routed, the excess of the cables must be coiled around special devices, such as a fiber coiler.
- When coiling fiber optic cables, apply even strength. Do not bend the cables with force.
- Vacant optical connectors must be covered with dustproof caps.
- Fiber optic cables cannot be squeezed by the cabinet door when routed through the cabinet.
- If fiber optic cables need to be routed on the tower platform, lay out the cables on the guardrail with the shortest distance and route the cables along the guardrail.
- If fiber optic cables need to be routed close to a device on the tower, secure the cables to the guardrail or pole with cable clips. The device cannot be far away from the position for securing the cables.
- If the fiber optic cables close to a device are too long, coil the excess of the cables and secure them on the tower.

10.2 Cable Connections

The cable connections of the BTS3902E vary depending on the number of BTS3902Es and the BTS3902E port.

The cable connections are similar when the BTS3902E uses AC power supply (working at the 1.9 GHz, 2.1 GHz or 850 MHz frequency band) or uses DC power supply (working at the AWS frequency band). The differences are as follows:

Copyright © Huawei Technologies Co., Ltd.

- The outdoor BTS3902E using AC power supply (working at the 1.9 GHz or 2.1 GHz frequency band) can be configured with the SPD60D and related cables.
- The outdoor BTS3902E using AC power supply (working at the 850 MHz frequency band) can be configured with the SPM60A and related cables.
- For the BTS3902E using DC power supply (working at the AWS frequency band), the AC surge protection box and related cables are not required.

The following section describes the cable connections for the BTS3902E with AC power supply (working at the 1.9 GHz or 2.1 GHz frequency band).

Four typical transmission solutions can apply to the BTS3902E, as shown in **Table 10-1**.

Table 10-1 Typical transmission solutions

Scenario	Typical Transmission Solution	Description
Single BTS3902E	Wired transmission	**Figure 10-1** shows the cable connections.
	Wireless transmission	**Figure 10-2** shows the cable connections.
Two cascaded BTS3902Es	Wired transmission	**Figure 10-3** and **Figure 10-4** show the cable connections.
	Wireless transmission	**Figure 10-5** shows the cable connections.

NOTE

- A BTS3902E can connect to the transmission network over an electrical port or optical port, depending on actual requirements. However, one BTS3902E can use two transmission ports at most, one for connection to the transmission network, and the other for cascading.
- The OPT1 and ETH ports cannot be both enabled for the same BTS3902E.

Single BTS3902E Using Wired Transmission

Figure 10-1 shows the cable connections for a single BTS3902E that uses wired transmission.

Copyright © Huawei Technologies Co., Ltd.

Figure 10-1 Cable connections for a single BTS3902E using wired transmission

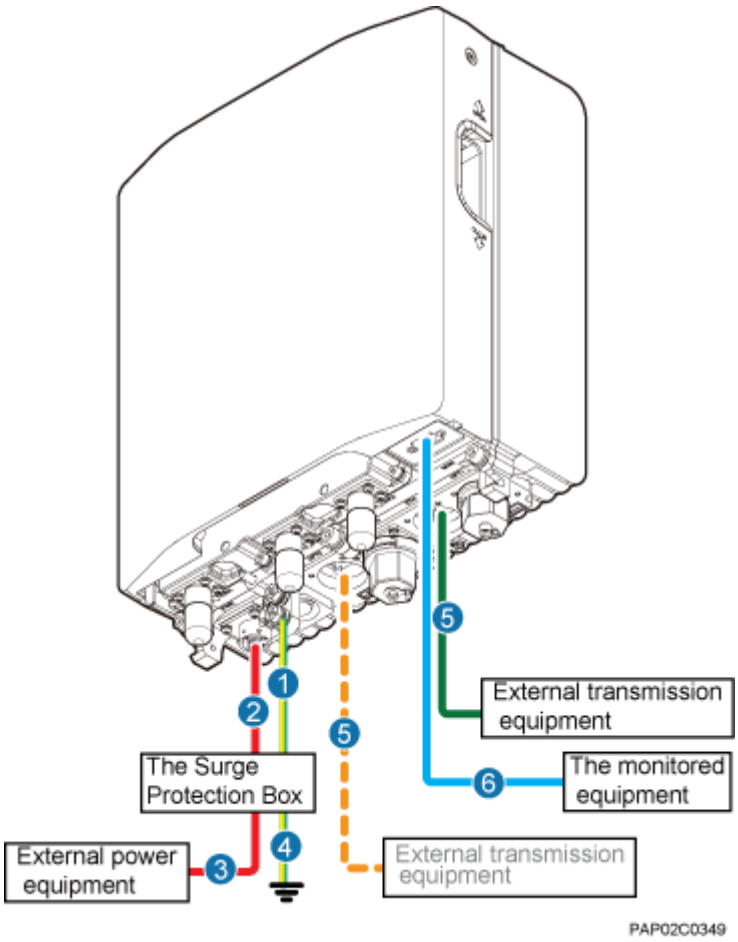

No.	Cable	One End	The Other End
(1)	Equipotential cable	Ground terminal of the BTS3902E	AC surge protection box
(2)	Power cable between the BTS3902E and the surge protection box	The PWR port on the BTS3902E	AC surge protection box
(3)	BTS3902E power cable	AC surge protection box	External power supply system
(4)	PGND cable	AC surge protection box	External PGND bar/ ground terminal
(5)	FE/GE cable	The ETH port on the BTS3902E	Network port on the external transmission equipment

Copyright © Huawei Technologies Co., Ltd.

No.	Cable	One End	The Other End
NOTE Either an FE/GE cable or an FE/GE fiber optic cable can be used.	FE/GE fiber optic cable	The OPT0 or OPT1 port on the BTS3902E	Optical port on the external transmission equipment
(6)	(Optional) BTS3902E alarm cable	The MON port on the BTS3902E	External monitored equipment

Single BTS3902E Using Wireless Transmission

Figure 10-2 shows the cable connections for a single BTS3902E that uses wireless transmission.

Figure 10-2 Cable connections for a single BTS3902E using wireless transmission

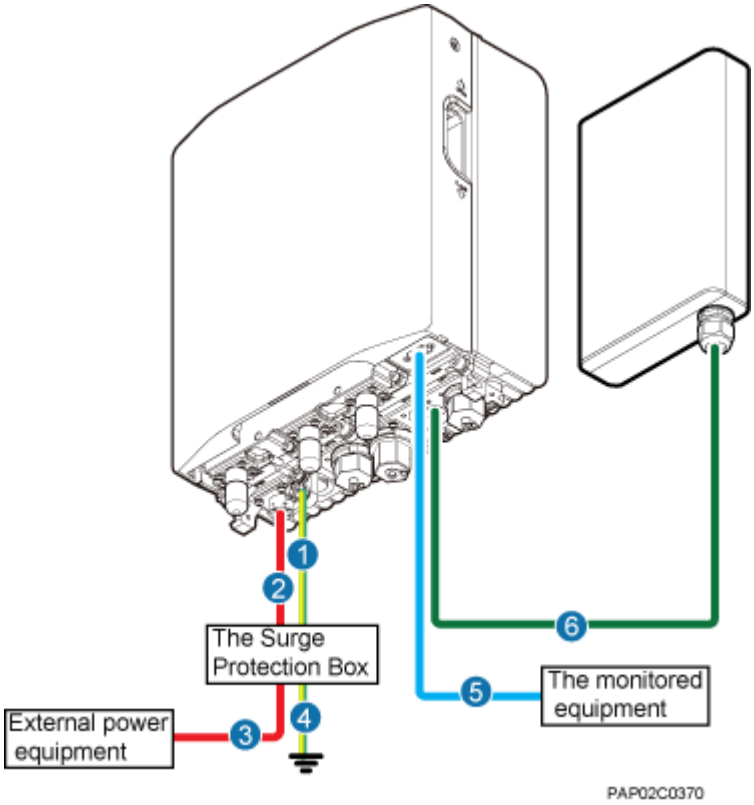

No.	Cable	One End	The Other End
(1)	Equipotential cable	Ground terminal of the BTS3902E	AC surge protection box

Copyright © Huawei Technologies Co., Ltd.

No.	Cable	One End	The Other End
(2)	Power cable between the BTS3902E and the surge protection box	The PWR port on the BTS3902E	AC surge protection box
(3)	BTS3902E power cable	AC surge protection box	External power supply system
(4)	PGND cable	AC surge protection box	External PGND bar/ ground terminal
(5)	(Optional) BTS3902E alarm cable	The MON port on the BTS3902E	External monitored equipment
(6)	FE/GE cable	The ETH port on the BTS3902E	Wireless transmission equipment

Two Cascaded BTS3902Es Using Wired Transmission

Figure 10-3, **Figure 10-4** shows the cable connections for two BTS3902Es that use wired transmission.

Copyright © Huawei Technologies Co., Ltd.

Figure 10-3 Cable connections for two BTS3902Es cascaded using a fiber optic cable in wired transmission

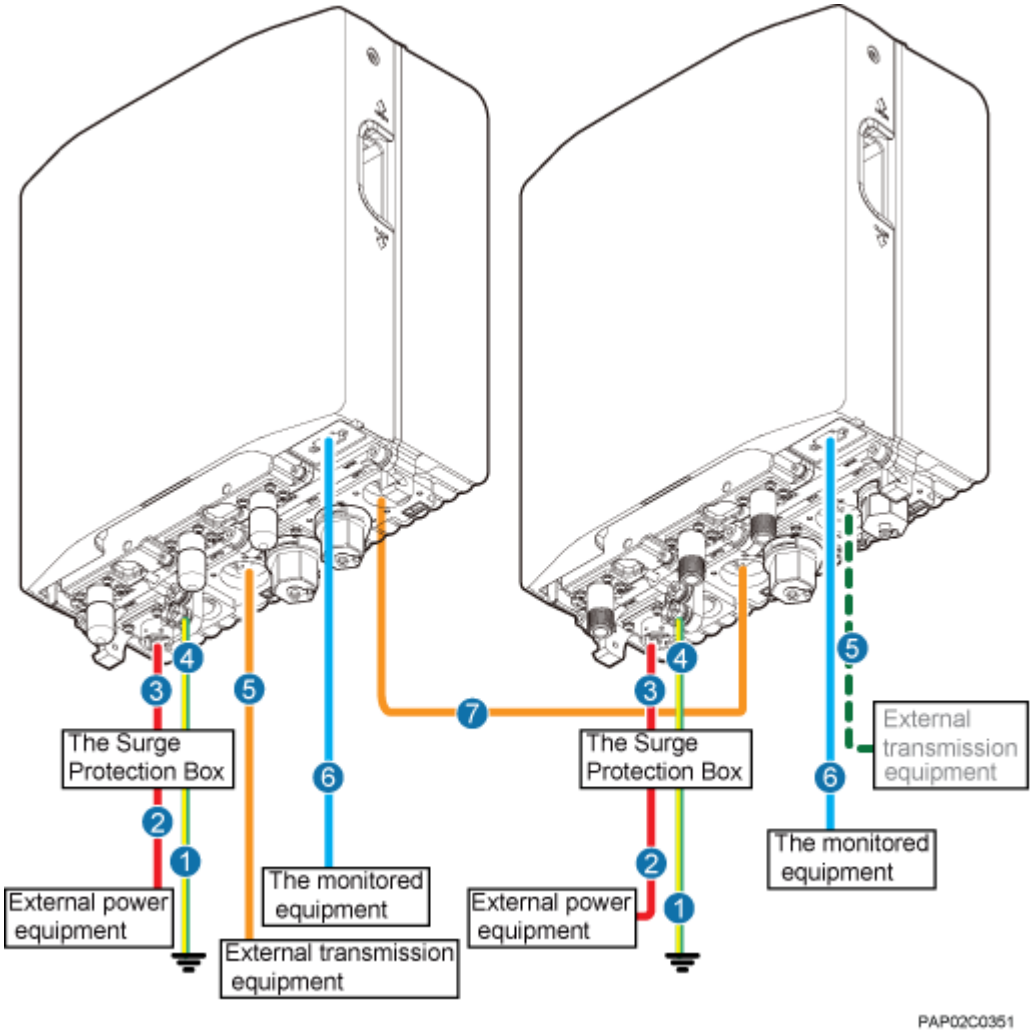

No.	Cable	One End	The Other End
(1)	PGND cable	AC surge protection box	External PGND bar/ ground terminal
(2)	BTS3902E power cable	AC surge protection box	External power supply system
(3)	Power cable between the BTS3902E and the surge protection box	The PWR port on the BTS3902E	AC surge protection box
(4)	Equipotential cable	Ground terminal of the BTS3902E	AC surge protection box
(5)	FE/GE cable	The ETH port on the BTS3902E	Network port on the external transmission equipment

Copyright © Huawei Technologies Co., Ltd.

No.	Cable	One End	The Other End
NOTE Either an FE/GE cable or an FE/GE fiber optic cable can be used.	FE/GE fiber optic cable	The OPT0 or OPT1 port on the BTS3902E	Optical port on the external transmission equipment
(6)	(Optional) BTS3902E alarm cable	The MON port on the BTS3902E	External monitored equipment
(7)	cascading FE/GE fiber optic cable	The OPT0 or OPT1 port on the BTS3902E	The OPT0 or OPT1 port on the lower-level cascaded BTS3902E

Figure 10-4 Cable connections for two BTS3902Es cascaded using an FE/GE cable in wired transmission

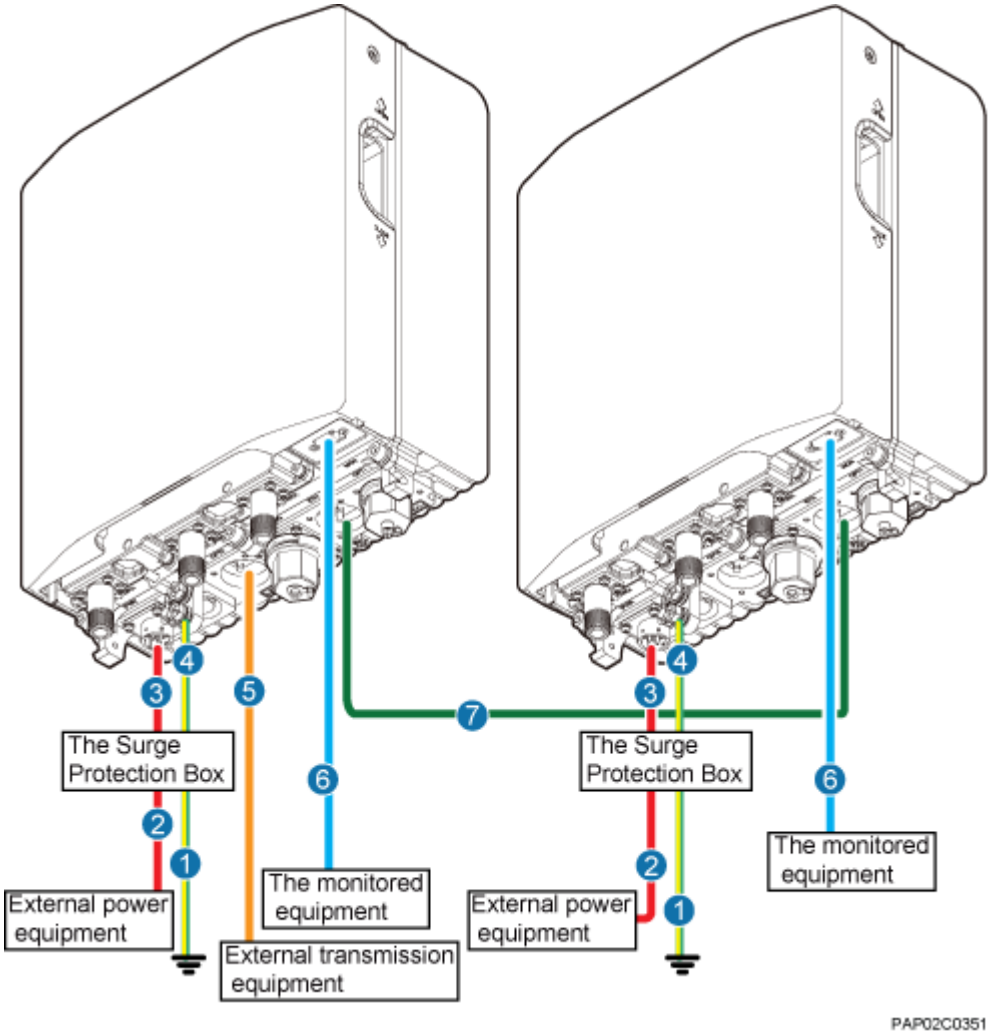

Copyright © Huawei Technologies Co., Ltd.

No.	Cable	One End	The Other End
(1)	PGND cable	AC surge protection box	External PGND bar/ ground terminal
(2)	BTS3902E power cable	AC surge protection box	External power supply system
(3)	Power cable between the BTS3902E and the surge protection box	The PWR port on the BTS3902E	AC surge protection box
(4)	Equipotential cable	Ground terminal of the BTS3902E	AC surge protection box
(5)	FE/GE fiber optic cable	The OPT0 or OPT1 port on the BTS3902E	Optical port on the external transmission equipment
(6)	(Optional) BTS3902E alarm cable	The MON port on the BTS3902E	External monitored equipment
(7)	cascading FE/GE cable	The ETH port on the BTS3902E	The ETH port on the lower-level cascaded BTS3902E

Two Cascaded BTS3902Es Using Wireless Transmission

Figure 10-5 shows the cable connections for two BTS3902Es that use wireless transmission.

Copyright © Huawei Technologies Co., Ltd.

Figure 10-5 Cable connections for two BTS3902Es using wireless transmission

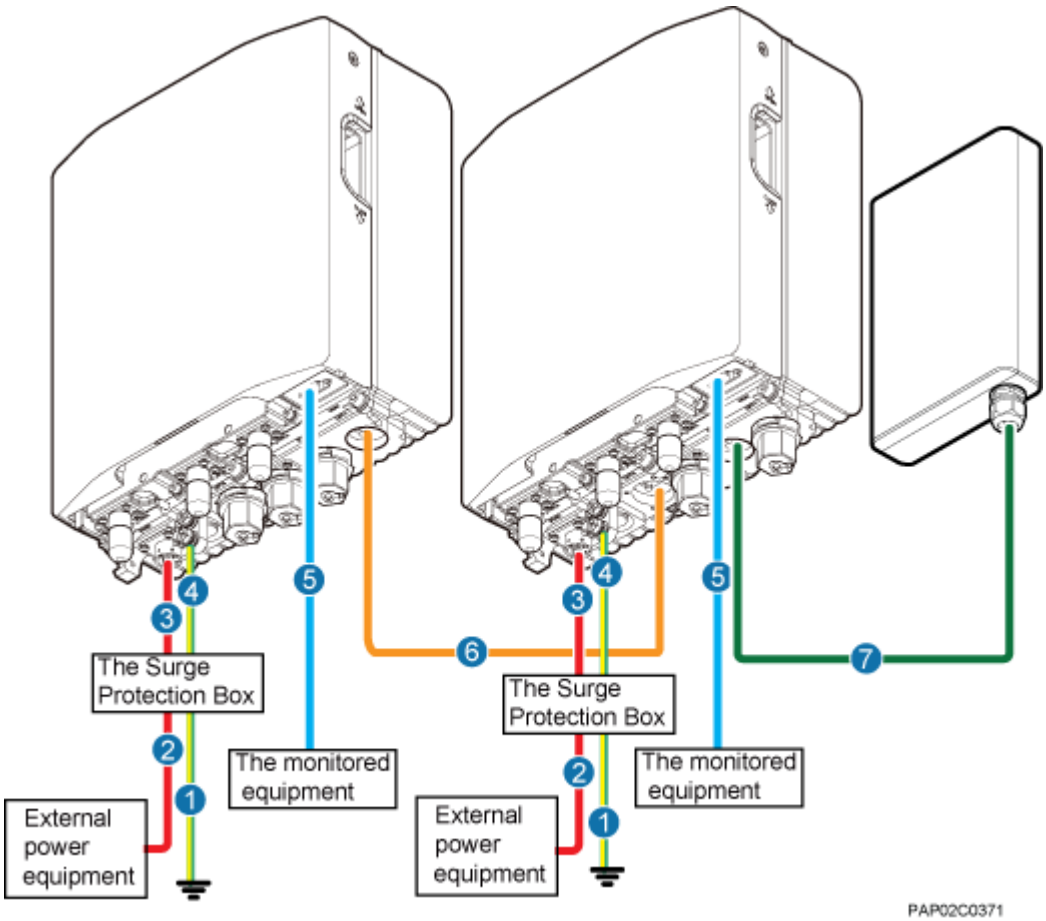

No.	Cable	One End	The Other End
(1)	PGND cable	AC surge protection box	External PGND bar/ ground terminal
(2)	BTS3902E power cable	AC surge protection box	External power supply system
(3)	Power cable between the BTS3902E and the surge protection box	The PWR port on the BTS3902E	AC surge protection box
(4)	Equipotential cable	Ground terminal of the BTS3902E	AC surge protection box
(5)	(Optional) BTS3902E alarm cable	The MON port on the BTS3902E	External monitored equipment
(6)	Cascading FE/GE fiber optic cable	The OPT0 or OPT1 port on the BTS3902E	The OPT0 port on the lower-level cascaded BTS3902E

Copyright © Huawei Technologies Co., Ltd.

No.	Cable	One End	The Other End
(7)	FE/GE cable	The ETH port on the lower-level cascaded BTS3902E	Wireless transmission equipment

10.3 Installing a PGND Cable and Equipotential Cable

The protection ground (PGND) cable and equipotential cable must be installed based on actual requirements.

Context

When an AC surge protection box (which is optional) is configured for a BTS3902E, two PGND cables are required. One provides equipotential connection between the AC surge protection box and the BTS3902E, and the other connects the AC surge protection box and a ground bar to ensure proper grounding of the AC surge protection box.

Table 10-2, **Table 10-3** lists the specifications of the PGND cable and equipotential cable.

Table 10-2 Specifications of the BTS3902E PGND cable and equipotential cable (working at the 1.9 GHz, 2.1 GHz or AWS frequency band)

Cable	One End	The Other End	Remarks
PGND cable	OT terminal (M6, 16 mm^2)	OT terminal (M6, 16 mm^2)	Green and yellow
Equipotential cable	OT terminal (M6, 16 mm^2)	OT terminal (M6, 16 mm^2)	Green and yellow

Table 10-3 Specifications of the BTS3902E PGND cable and equipotential cable (working at the 850 GHz frequency band)

Cable	One End	The Other End	Remarks
PGND cable	OT terminal (M6, 6 mm^2)	OT terminal (M6, 6 mm^2)	Green and yellow
Equipotential cable	OT terminal (M6, 6 mm^2)	OT terminal (M6, 6 mm^2)	Green and yellow

NOTE

The cable route depends on actual requirements.

Copyright © Huawei Technologies Co., Ltd.

Procedure

- Install a PGND cable if no AC surge protection box is installed, as shown in **Figure 10-6**.
  1. Connect one end of the BTS3902E PGND cable to the ground terminal on the BTS3902E and the other end to the external ground bar.

Figure 10-6 Installing the BTS3902E PGND cable

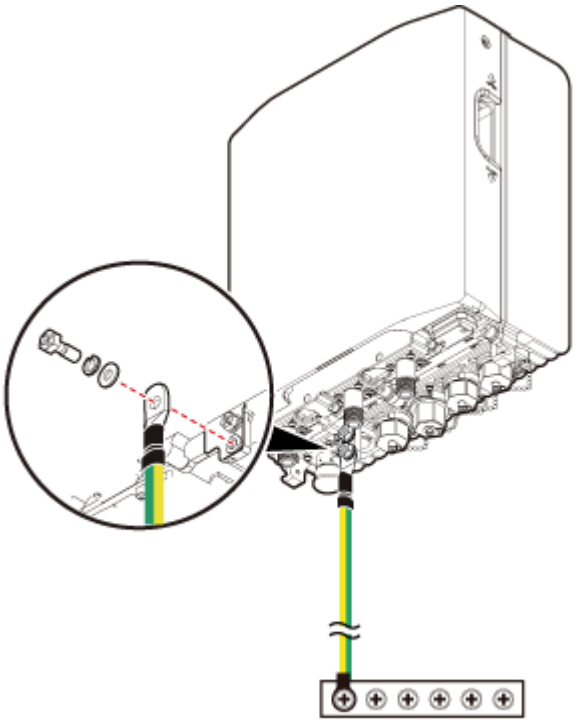

NOTE

When installing the PGND cable, tightly press the OT terminal in the correct direction, as shown in **Figure 10-7**.

Figure 10-7 Installing an OT terminal in the correct manner

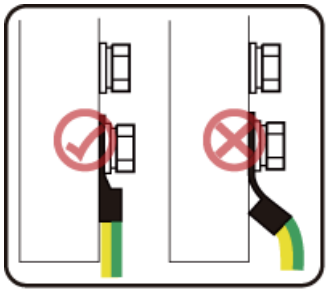

Copyright © Huawei Technologies Co., Ltd.

2. Route the cable by referring to **10.1 Cabling Requirements**, and then use cable ties to bind the cable.
3. Label the installed cable by referring to Attaching a Cable-Tying Label in *Installation Reference*.

- Install a PGND cable and equipotential cable if an AC surge protection box is installed, as shown in **Figure 10-8**.

NOTE

There are two types of the AC surge protection box (SPD60D and SPM60A), for which the installing procedure is the same. The following part uses SPD60D as an example to describe.

1. Connect one end of the BTS3902E equipotential cable to the ground terminal on the BTS3902E and the other end to the AC surge protection box (SPB).
2. Connect one end of the BTS3902E PGND cable to the ground terminal on the AC PDB and the other end to the external ground bar.

Figure 10-8 Installing a PGND cable and equipotential cable

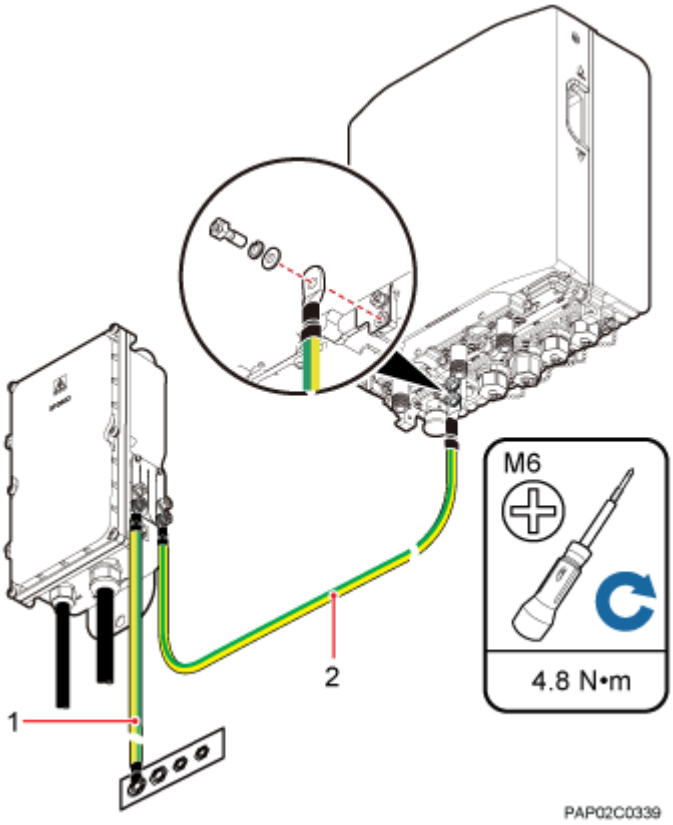

(1) PGND cable (2) Equipotential cable

NOTE

When installing the PGND cable, tightly press the OT terminal in the correct direction, as shown in **Figure 10-9**.

Copyright © Huawei Technologies Co., Ltd.

Figure 10-9 Installing an OT terminal in the correct manner

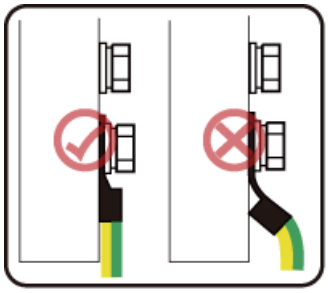

3. Route the cable by referring to **10.1 Cabling Requirements**, and then use cable ties to bind the cable.
4. Label the installed cable by referring to Attaching a Cable-Tying Label in *Installation Reference*.

- Install a PGND cable if BTS3902Es are installed on an IFS06, as shown in **Figure 10-10**.
  1. Connect one end of the BTS3902E PGND cable to the ground terminal on the BTS3902E and the other end to the ground terminal of the ground bar on the IFS06.

Copyright © Huawei Technologies Co., Ltd.

Figure 10-10 Installing a PGND cable

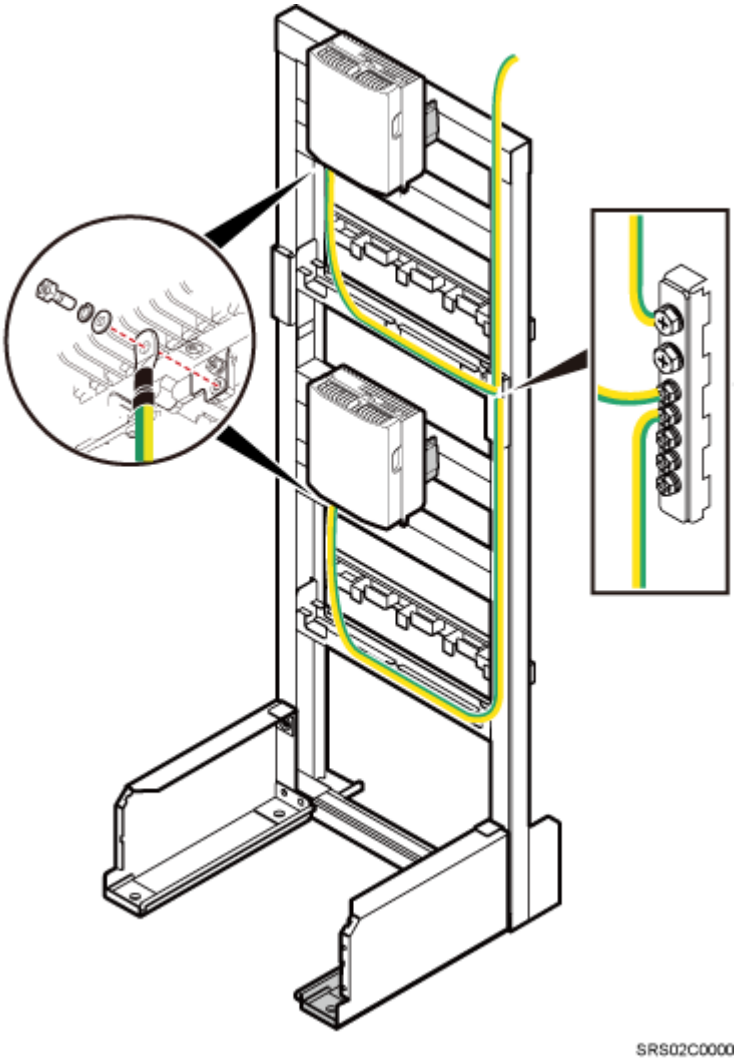

NOTE

When installing the PGND cable, tightly press the OT terminal in the correct direction, as shown in **Figure 10-11**.

Figure 10-11 Installing an OT terminal in the correct manner

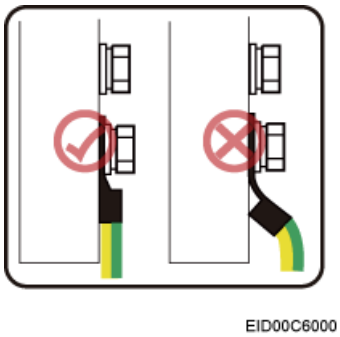

Copyright © Huawei Technologies Co., Ltd.

2. Route the cable by referring to **10.1 Cabling Requirements**, and then use cable ties to bind the cable.
3. Label the installed cable by referring to Attaching a Cable-Tying Label in *Installation Reference*.

----End

10.4 Installing a BTS3902E Power Cable

A BTS3902E power cable connects the BTS3902E to an external power device, feeding external power into the BTS3902E.

10.4.1 Installing an AC Power Cable (Working at the 1.9 GHz, 2.1 GHz or 850 MHz Frequency Band)

This section applies only to the BTS3902E that uses AC power supply.

Prerequisites

- The tools, such as a Phillips screwdriver, a cable cutter, and a power cable crimping tool, are ready.
- The PGND cable and equipotential cable are installed.

Context

Table 10-4 lists the recommended configurations of upper-level circuit breakers and power cables for a BTS3902E.

Table 10-4 Recommended configurations of upper-level circuit breakers and power cables for a BTS3902E

Input Power	Requirement for the Circuit Breakers on Customer Equipment	Cross-sectional Area of an Input Power Cable
220 V/110 V AC single-phase	5 A/1 P(1)	1.5 mm^2

NOTE

(1) P is short for Pole, indicating the number of switches simultaneously controlled by a pole.

Table 10-5, **Table 10-6** lists the specifications of the BTS3902E power cable.

Copyright © Huawei Technologies Co., Ltd.

Table 10-5 Specifications of the BTS3902E power cable (working at the 1.9 GHz or 2.1 GHz frequency band)

Cable	One End	The Other End	Remarks
BTS3902E power cable	3-pin waterproofed round AC connector (1.5 mm^2)	Depending on the external equipment	Black
Power cable between the BTS3902E and the AC surge protection box	3-pin waterproofed round AC connector (1.5 mm^2)	OT terminal (M4, 1.5 mm^2)	Black
Power cable between the surge protection box and the external power equipment	OT terminal (M4, 4 mm^2)	Depending on the external equipment	Black

Table 10-6 Specifications of the BTS3902E power cable (working at the 850 MHz frequency band)

Cable	One End	The Other End	Remarks
BTS3902E power cable	3-pin waterproofed round AC connector (1.5 mm^2)	Depending on the external equipment	Black
Power cable between the BTS3902E and the AC surge protection box	3-pin waterproofed round AC connector (1.5 mm^2)	OT terminal (M4, 1.5 mm^2)	Black
Power cable between the surge protection box and the external power equipment	OT terminal (M4, 2.5 mm^2)	Depending on the external equipment	Black

NOTE

The cable route depends on actual requirements.

Procedure

- Install the BTS3902E power cable in the AC power supply scenario when no AC surge protection box is configured, as shown in **Figure 10-12**.
  1. Link the 3-pin waterproofed round AC connector at one end of the BTS3902E power cable to the PWR port on the BTS3902E, and tighten the connector.
  2. Connect the other end to external power equipment.

Copyright © Huawei Technologies Co., Ltd.

Figure 10-12 Connection of the power cable between the BTS3902E and power equipment

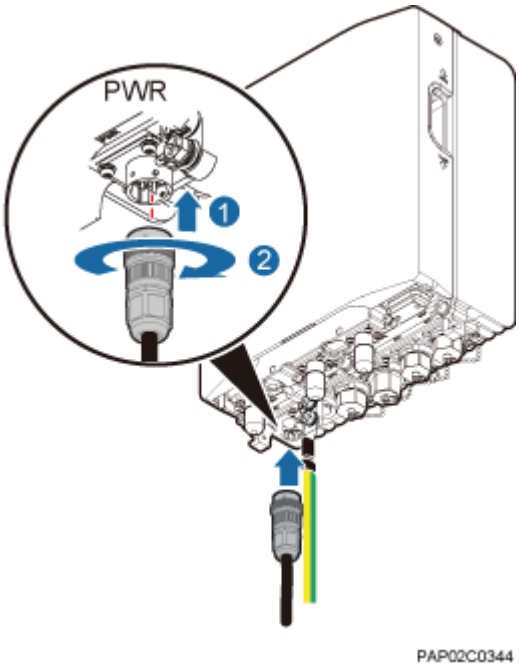

3. Route the cable by referring to **10.1 Cabling Requirements**, and then use cable ties to bind the cable.
4. Label the installed cable by referring to Attaching a Cable-Tying Label in *Installation Reference*.

- Install the BTS3902E power cable in the AC power supply scenario when an AC surge protection box is configured, as shown in **Figure 10-13**.

NOTE

There are two types of the AC surge protection box (SPD60D and SPM60A), for which the installing procedure is the same. The following part uses SPD60D as an example to describe.

1. Link the 3-pin waterproofed round AC connector at one end of the power cable between the BTS3902E and the surge protection box to the PWR port on the BTS3902E, and tighten the connector.
2. Connect the other end to the surge protection box

Copyright © Huawei Technologies Co., Ltd.

Figure 10-13 Connection of the BTS3902E power cable to the surge protection box

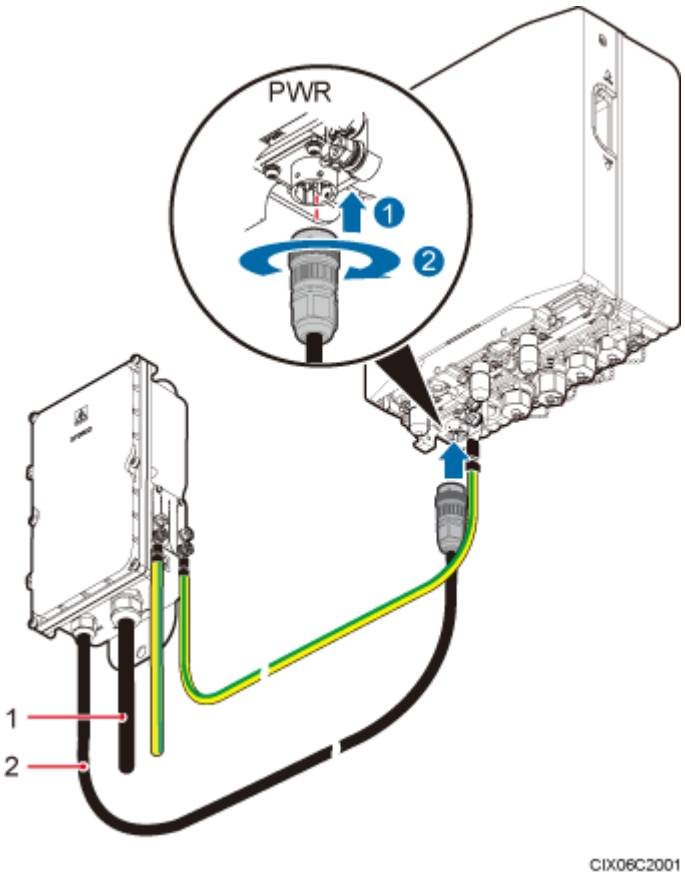

(1) Power cable between the surge protection box and external power equipment (2) Power cable between the BTS3902E and the surge protection box

3. Connect one end of the power cable between the surge protection box and external power equipment to the surge protection box and the other end to external power equipment by referring to **9.1.4 Installing Cables for an SPD60D** or **9.2.4 Installing Cables for an SPM60A**.
4. Route the cable by referring to **10.1 Cabling Requirements**, and then use cable ties to bind the cable.
5. Label the installed cable by referring to Attaching a Cable-Tying Label in *Installation Reference*.

----End

10.4.2 Installing a DC Power Cable (Working at the AWS Frequency Band)

This section applies only to the BTS3902E that uses DC power supply.

Copyright © Huawei Technologies Co., Ltd.

Prerequisites

- The following tools are available: a Phillips screwdriver, a cable cutter, and a power cable crimping tool.
- A PGND cable and an equipotential cable have been installed.

Context

Table 10-7 lists the BTS3902E power cable specifications.

Table 10-7 BTS3902E power cable specifications

Cable	One End	The Other End	Remarks
BTS3902E power cable	Waterproofed round DC connector	Depending on the external equipment	There are two types of power cables in terms of cross-sectional areas: 3.3 mm^2 (12 AWG) complying with North American standards and 4 mm^2 complying with European standards.

NOTE

The cable route depends on actual requirements.

Procedure

Step 1 Prepare a power cable.

1. Cut the cable to a length suitable for the actual cable route.
2. Install a waterproofed round DC connector onto the power cable on the BTS3902E side by referring to **14.2 Adding a Waterproofed Round DC Connector to the BTS3902E Power Cable on the BTS3902E Side**.

Step 2 Connect the 2-pin waterproofed round DC connector at one end of the BTS3902E power cable to the PWR port on the BTS3902E. Push the 2-pin waterproofed round DC connector upwards until it snaps into place.

Copyright © Huawei Technologies Co., Ltd.

Figure 10-14 Installing a BTS3902E power cable

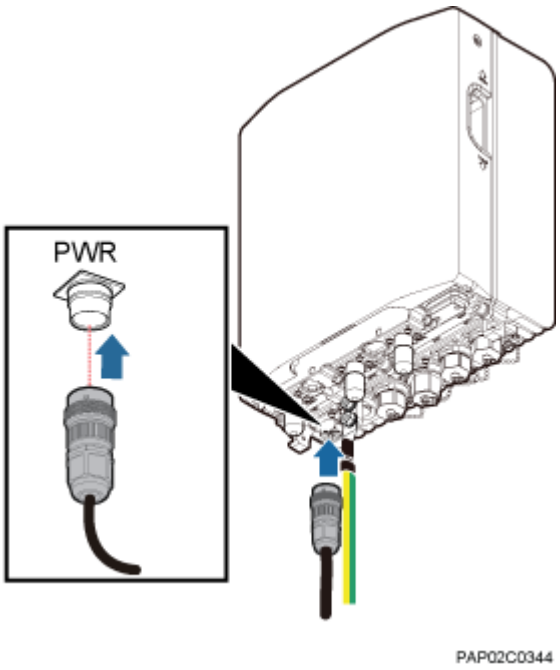

Step 3 Connect the other end of the BTS3902E power cable to external power equipment.

Step 4 Route the cable according to the instructions in **10.1 Cabling Requirements**, and then use a cable tie to bind the cable.

Step 5 Label the cable by referring to Attaching a Cable-Tying Label.

----End

10.5 Installing Transmission Cables

A fast Ethernet or gigabit Ethernet (FE/GE) cable or FE/GE fiber optic cable must be installed for BTS3902Es as required.

10.5.1 Installing an FE/GE Cable

This section describes the procedure and precautions for installing a fast Ethernet or gigabit Ethernet (FE/GE).

Context

NOTE

The cable route depends on actual requirements.

Procedure

Step 1 Remove the waterproof cap from the ETH port on the BTS3902E.

Copyright © Huawei Technologies Co., Ltd.

Step 2 Connect one end of the FE/GE cable to the ETH port on the BTS3902E, and tighten the round connector until it snaps shut, as shown in **Figure 10-15**.

Figure 10-15 Installing the FE/GE cable

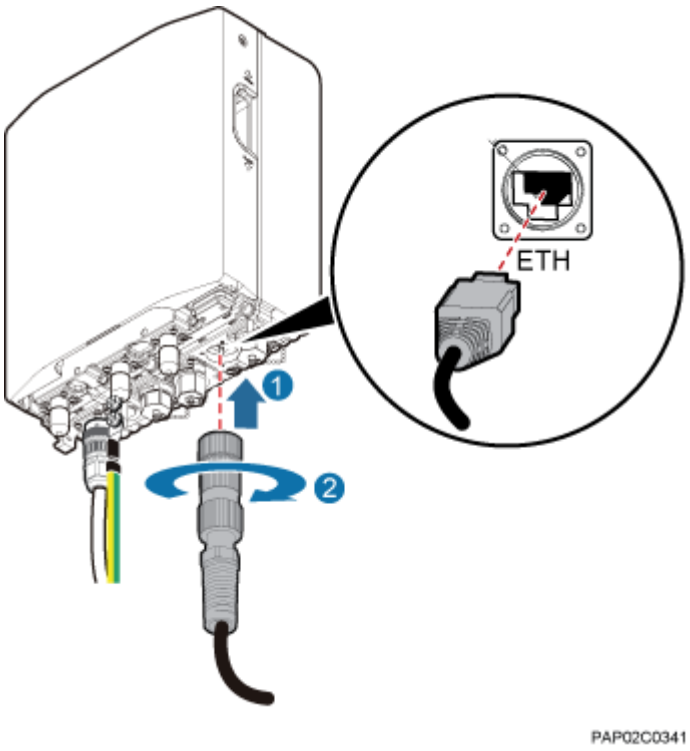

Step 3 Install a ground clip on the FE/GE cable by referring to **14.3 Installing a Ground Clip**.

Step 4 Route the cable by referring to **10.1 Cabling Requirements**, and then use cable ties to bind the cable.

Step 5 Label the installed cable by referring to Attaching a Sign Plate Label in *Installation Reference*.

----End

10.5.2 Installing an FE/GE Fiber Optic Cable

This section describes the procedure and precautions for installing a fast Ethernet or gigabit Ethernet (FE/GE) fiber optic cable with DLC connector.

Context

- The single-mode optical module to be installed must match the rate at the optical port.
- Do not twist, bend, stretch, or extrude fibers during installation.

Copyright © Huawei Technologies Co., Ltd.

NOTICE

The performance of an optical module that is exposed to the air for more than 20 minutes may be abnormal. Therefore, you must insert an fiber optic cable into an unpacked optical module within 20 minutes.

NOTE

The cable route depends on actual requirements.

Procedure

Step 1 Remove the waterproof cap from the OPT0 port on the BTS3902E.

Step 2 Install the optical module.

1. Remove the dustproof cap of the optical module and store it properly for future use.
2. Turn the puller of an optical module outwards and insert the optical module into the OPT0 port on the BTS3902E, as shown in **Figure 10-16**.

Figure 10-16 Installing the optical module

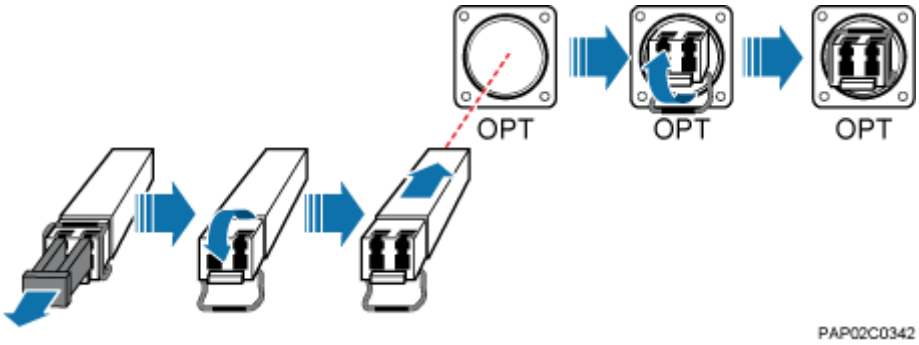

Step 3 Install the FE/GE fiber optic cable.

1. Open the protective cap from the round connector, take out the optical fibers, cut the traction cables, as shown in **Figure 10-17**.

   NOTE

   Please store the dustproof cap of the optical fiber connector properly for future use.

Copyright © Huawei Technologies Co., Ltd.

Figure 10-17 Taking out the optical fiber connector

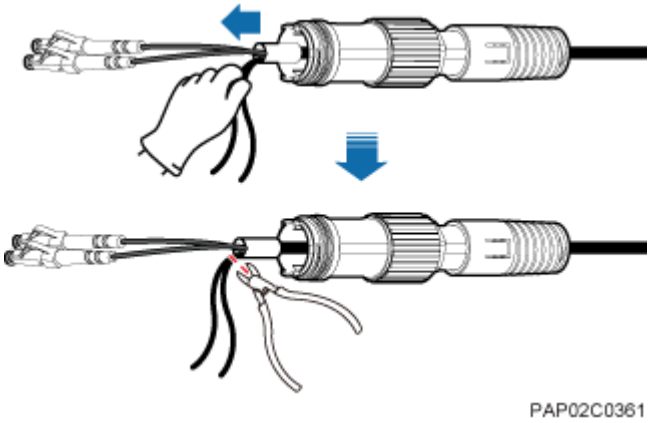

2. Separate the inner gasket from outer gasket of the round connector, as shown in **Figure 10-18**.

Figure 10-18 Separating the inner gasket from outer gasket

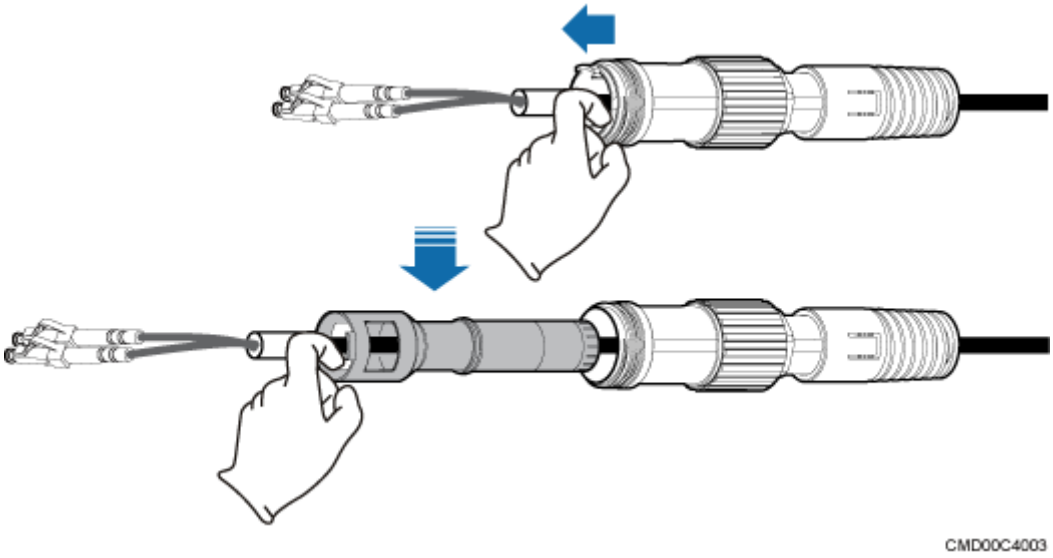

3. Sort the optical fibers, remove the dustproof cap from the optical fiber connector, and insert the DLC connector into the optical module.

NOTICE

To keep the surface of round connector clean, do not remove the dustproof cap before inserting the DLC connector into the optical module.

4. Align the clamping jaw on the inner gasket with the socket of the OPT0 port on the BTS3902E. Insert and fit the clamping jaw into the socket. Hold the optical fiber at the end of the DLC connector and pull the fiber optic cable straight in the round connector to avoid twist of the optical fibers, as shown in **Figure 10-19**.

Copyright © Huawei Technologies Co., Ltd.

Figure 10-19 Installing the inner gasket of the round connector

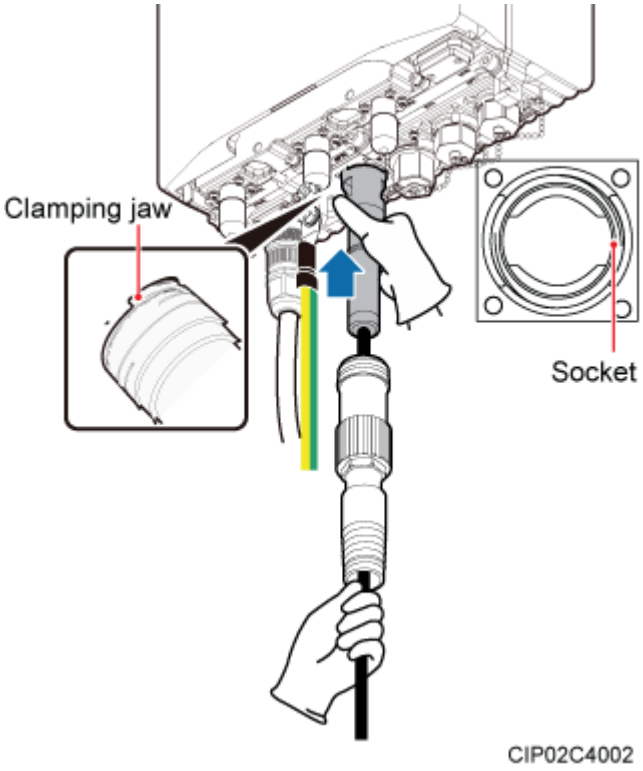

5. Push the outer socket of the round connector upwards and tighten the outer socket, as shown in **Figure 10-20**.

Copyright © Huawei Technologies Co., Ltd.

Figure 10-20 Installing the outer gasket of the round connector

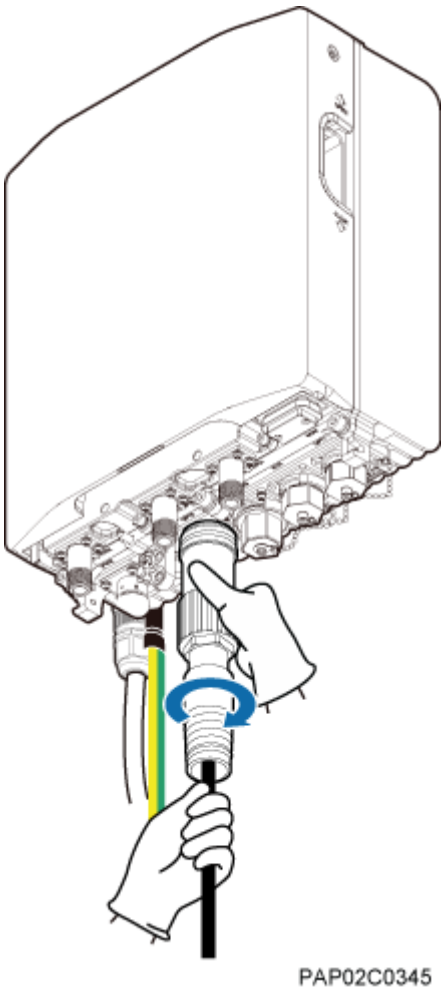

Step 4 Route the cable by referring to **10.1 Cabling Requirements**, and then use cable ties to bind the cable.

Step 5 Label the installed cable by referring to Attaching a Sign Plate Label in *Installation Reference*.

----End

10.5.3 Installing a Cascading FE/GE Fiber Optic Cable

When multiple BTS3902Es implement transmission over FE/GE optical ports, the BTS3902Es are interconnected using a cascading FE/GE fiber optic cable.

Context

The single-mode optical module to be installed must match the rate at the optical port.

Copyright © Huawei Technologies Co., Ltd.

NOTICE

The performance of an optical module that is exposed to the air for more than 20 minutes may be abnormal. Therefore, you must insert an fiber optic cable into an unpacked optical module within 20 minutes.

NOTE

The cable route depends on actual requirements.

Procedure

Step 1 Remove the waterproof caps from the OPT0 or OPT1 port on the BTS3902E A and OPT0 or OPT1 port on the BTS3902E B.

Step 2 Turn the puller of each optical module outwards and insert the optical module into the OPT0 or OPT1 port on each BTS3902E, as shown in **Figure 10-21**.

Figure 10-21 Installing an optical module

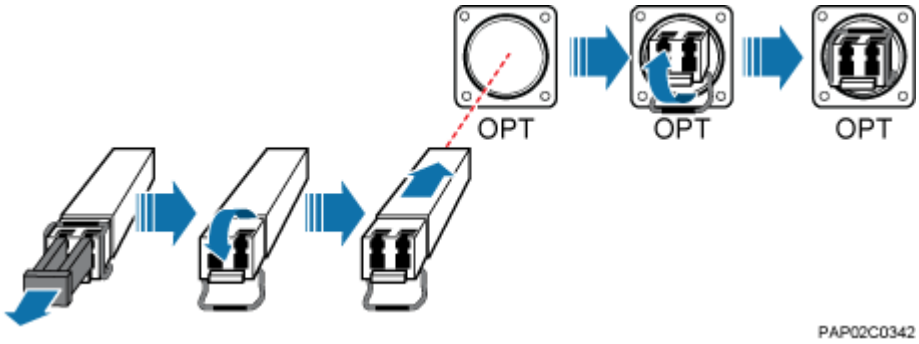

Step 3 Connect the two ends of the cascading FE/GE fiber optic cable to the OPT0 or OPT1 port on the BTS3902E A and OPT0 or OPT1 port on the BTS3902E B, respectively, and then tighten the round connector until the connector snaps shut, as shown in **Figure 10-22**.

Copyright © Huawei Technologies Co., Ltd.

Figure 10-22 Installing the cascading FE/GE fiber optic cable

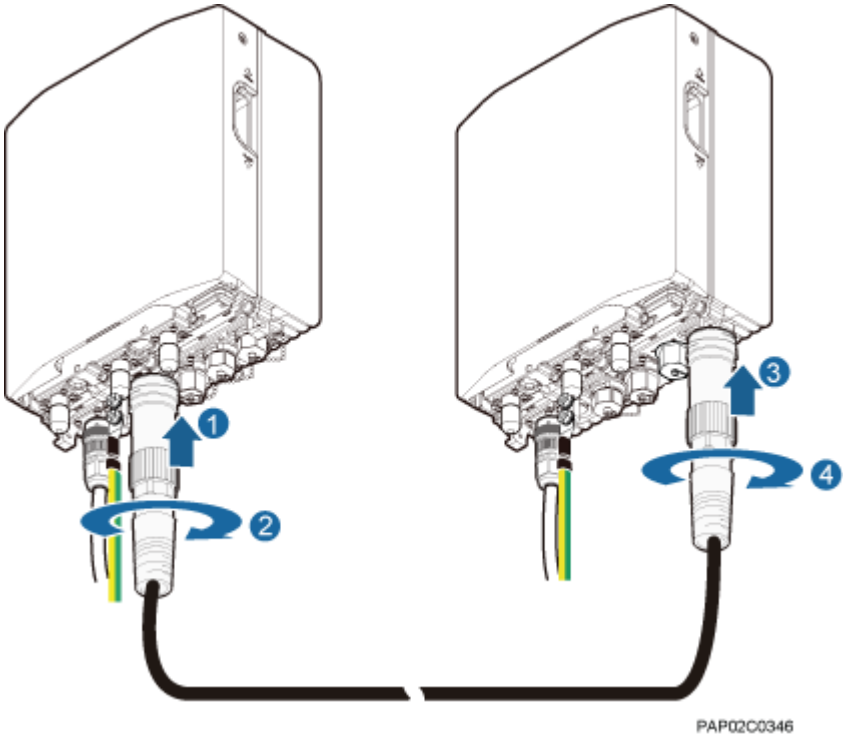

Step 4 Route the cable by referring to **10.1 Cabling Requirements**, and then use cable ties to bind the cable.

Step 5 Label the installed cable by referring to Attaching a Sign Plate Label in *Installation Reference*.

----End

10.5.4 Installing a Cascading FE/GE Cable

When multiple BTS3902Es implement transmission over FE/GE electrical ports, the BTS3902Es are interconnected using a cascading FE/GE cable.

Context

NOTE

The cable route depends on actual requirements.

Procedure

Step 1 Remove the waterproof caps from the ETH port on the BTS3902E A and ETH port on the BTS3902E B.

Step 2 Connect the two ends of the cascading FE/GE cable to the ETH port on the BTS3902E A and ETH port on the BTS3902E B, and tighten the round connector until it snaps shut, as shown in **Figure 10-23**.

Copyright © Huawei Technologies Co., Ltd.

Figure 10-23 Installing the cascading FE/GE cable

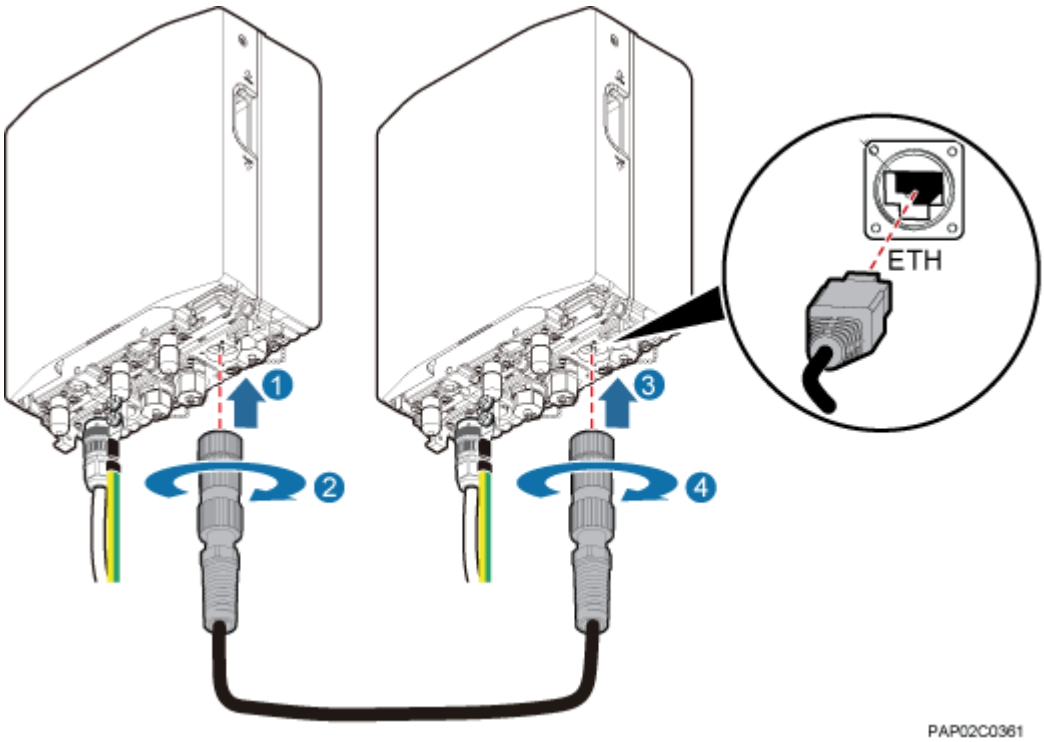

Step 3 Install a ground clip on the FE/GE cable by referring to **14.3 Installing a Ground Clip**.

Step 4 Route the cable by referring to **10.1 Cabling Requirements**, and then use cable ties to bind the cable.

Step 5 Label the installed cable by referring to Attaching a Sign Plate Label in *Installation Reference*.

----End

10.6 (Optional) Installing a BTS3902E RF Jumper

You must install a radio frequency (RF) jumper when a BTS3902E uses an external antenna.

Context

NOTE

The cable route depends on actual requirements.

Procedure

Step 1 Link the type N male connector at one end of the BTS3902E RF jumper to the ANT port, and connect the other end to an external antenna system, as shown in **Figure 10-24**.

Copyright © Huawei Technologies Co., Ltd.

Figure 10-24 Installing the BTS3902E RF jumper

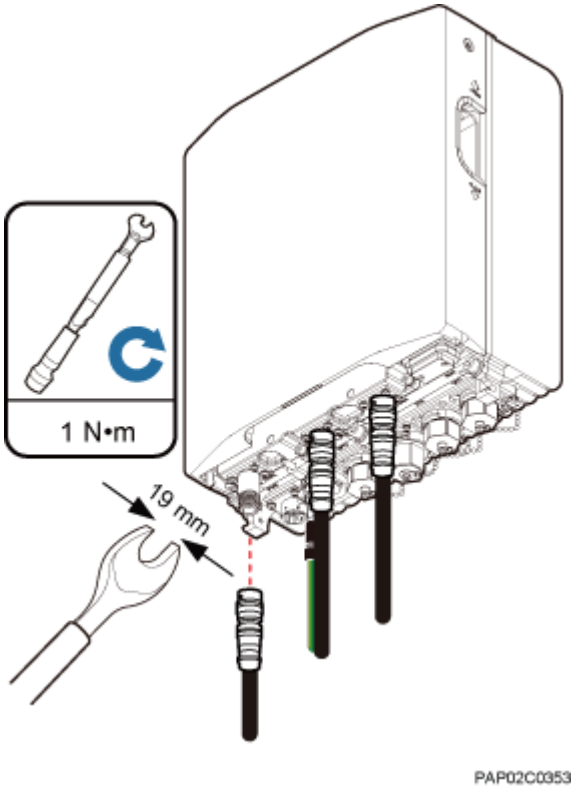

Step 2 Wrap the connector of the BTS3902E RF jumper using tape, as shown in **Figure 10-25**.

Figure 10-25 Wrap the connector of the BTS3902E RF jumper

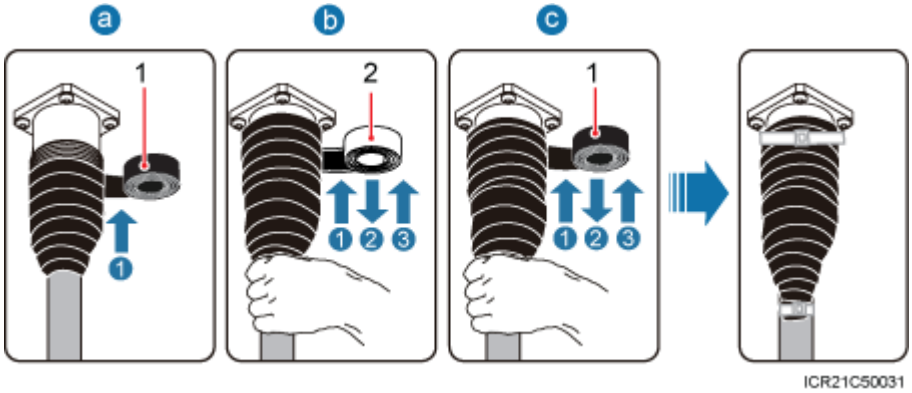

(1) PVC insulation tape (2) Waterproof tape

1. Wrap a layer of PVC insulation tape around the connector from bottom up.
2. Tightly wrap three layers of waterproof tape around the connector, with the first layer from bottom up, the second layer from top down, and the third layer from bottom up.

Copyright © Huawei Technologies Co., Ltd.

3. Tightly wrap three layers of PVC insulation tape around the connector with the first layer from bottom up, the second layer from top down, and the third layer from bottom up.
4. Bundle cable ties 3 mm (0.12 in.) to 5 mm (0.20 in.) away from the end of insulating tape.

NOTE

- Before wrapping waterproof tape, stretch the tape evenly until the length of the tape is twice its original length.
- Do not stretch the PVC insulation tape before wrapping.
- Wrap each layer of tape around the connector tightly and neatly, and ensure that each layer of tape overlaps more than 50% of the preceding layer
- Ensure that the side with adhesive tape is covered on the wrapped tape.
- When cutting off the cable tie, reserve a surplus length of 3 mm (0.12 in.) to 5 mm (0.20 in.).

Step 3 Check the dustproof caps on the antenna connectors. In outdoor scenarios, dustproof caps must be wrapped with tape, as shown in **Figure 10-26**.

NOTICE

Do not remove dustproof caps from vacant antenna connectors.

Figure 10-26 Waterproofing a dustproof cap

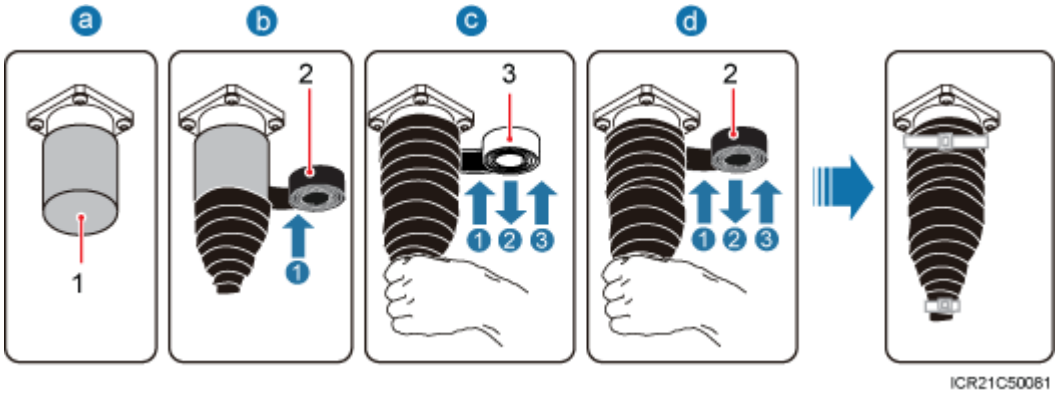

(1) Dustproof cap (2) PVC insulation tape (3) Waterproof tape

1. Verify that dustproof caps are not removed.
2. Wrap a layer of PVC insulation tape around the connector from bottom up.
3. Tightly wrap three layers of waterproof tape around the connector, with the first layer from bottom up, the second layer from top down, and the third layer from bottom up.
4. Tightly wrap three layers of PVC insulation tape around the connector with the first layer from bottom up, the second layer from top down, and the third layer from bottom up.
5. Bundle cable ties 3 mm (0.12 in.) to 5 mm (0.20 in.) away from the end of insulating tape.

Copyright © Huawei Technologies Co., Ltd.

NOTE

- Before wrapping waterproof tape, stretch the tape evenly until the length of the tape is twice its original length.
- Do not stretch the PVC insulation tape before wrapping.
- Wrap each layer of tape around the connector tightly and neatly, and ensure that each layer of tape overlaps more than 50% of the preceding layer
- Ensure that the side with adhesive tape is covered on the wrapped tape.
- When cutting off the cable tie, reserve a surplus length of 3 mm (0.12 in.) to 5 mm (0.20 in.).

Step 4 Route the cable by referring to **10.1 Cabling Requirements**, and then use cable ties to bind the cable.

Step 5 Label the installed cable by referring to Attaching a Sign Plate Label in *Installation Reference*.

----End

10.7 (Optional) Installing the Alarm Cable

This section describes the procedure for installing a BTS3902E alarm cable.

Context

NOTE

The cable route depends on actual requirements.

Procedure

Step 1 Link the DB15 male connector at one end of the alarm cable to the MON port on the BTS3902E, and then tighten the screw on the connector to 0.25 N·m (2.21 lbf·in.), as shown in **Figure 10-27**.

Copyright © Huawei Technologies Co., Ltd.

Figure 10-27 Installing the alarm cable

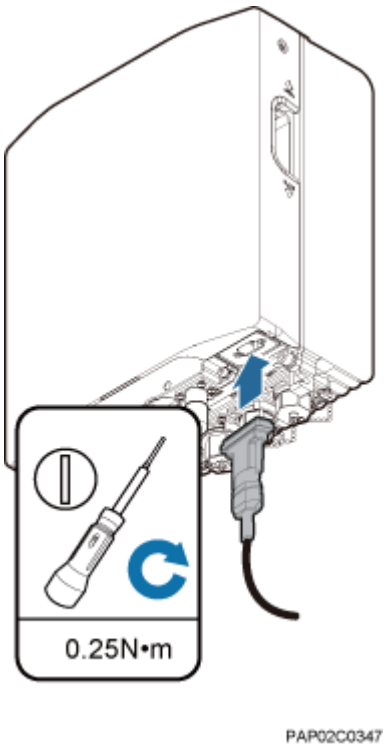

Step 2 Route the cable by referring to **10.1 Cabling Requirements**, and then use cable ties to bind the cable.

Step 3 Label the installed cable by referring to Attaching a Sign Plate Label in *Installation Reference*.

----End

Copyright © Huawei Technologies Co., Ltd.

11 Installing the Housing

About This Chapter

This chapter describes the procedures for installing the upper housing and optional camouflage shell for a BTS3902E after the BTS3902E and related cables are installed. There are two types of the BTS3902E. This document uses one type as the example to describe how to install the housing.

Context

- If the optional camouflage shell is required, the shell must be installed before the upper housing is installed, and the upper housing must be removed before the shell is removed.
- There are two types of the BTS3902E. This document uses one type as the example to describe.

11.1 (Optional) Installing a Camouflage Shell
This section describes how to install a camouflage shell for a BTS3902E as required.

11.2 Installing the Upper Housing
This section describes how to install the upper housing for a BTS3902E.

Copyright © Huawei Technologies Co., Ltd.

11.1 (Optional) Installing a Camouflage Shell

This section describes how to install a camouflage shell for a BTS3902E as required.

Procedure

Step 1 Use an M4 Phillips screwdriver to loosen the two captive screws from the upper housing, as shown in **Figure 11-1**.

Figure 11-1 Loosening the screws from the housing

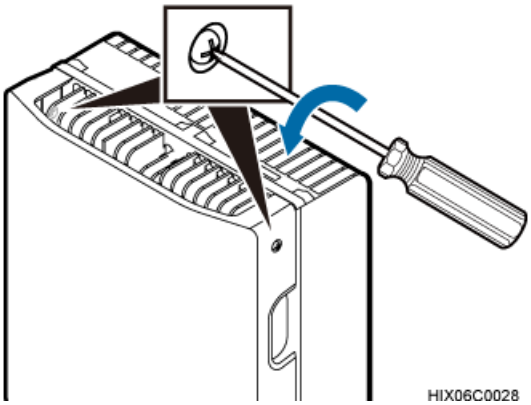

Step 2 Move the upper housing until it is stopped, as shown in **Figure 11-2**.

Figure 11-2 Moving the upper housing

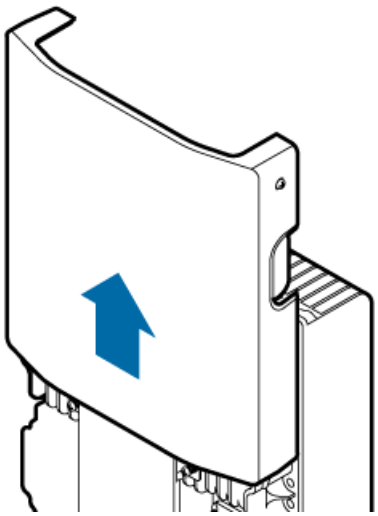

Step 3 Install the slots on the camouflage shell to the tabs to secure the shell, as shown in **Figure 11-3**.

Copyright © Huawei Technologies Co., Ltd.

Figure 11-3 Installing the camouflage shell

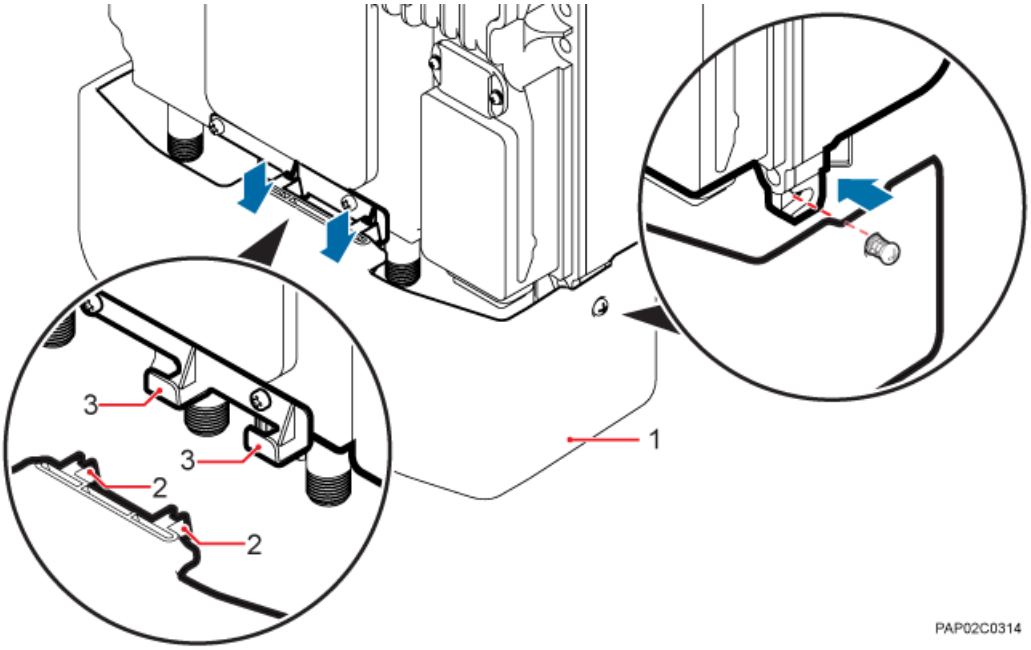

(1) Camouflage shell (2) Slots (3) Tabs

Step 4 Use an M4 Phillips screwdriver to tighten the two captive screws to 1.2 N·m (10.62 lbf·in.), as shown in **Figure 11-4**.

Copyright © Huawei Technologies Co., Ltd.

Figure 11-4 Tightening the screws

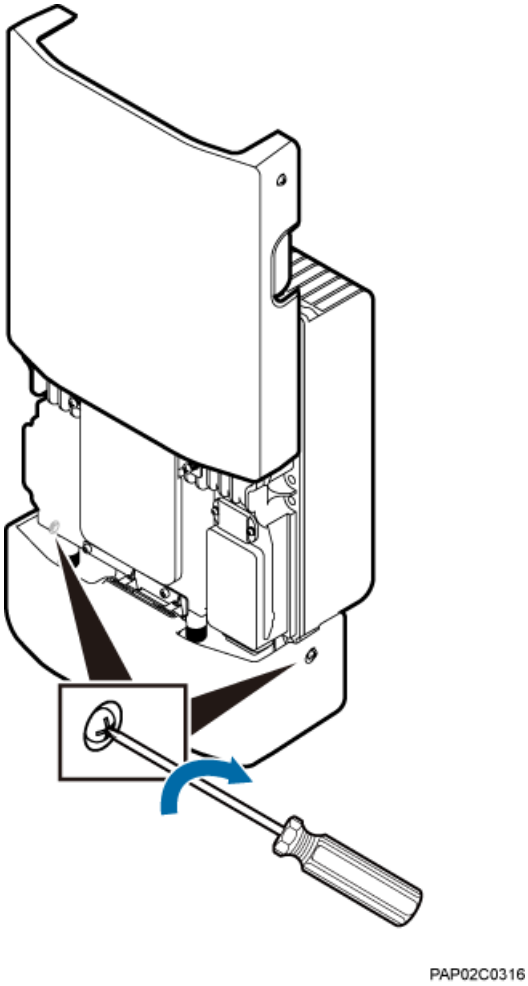

----End

11.2 Installing the Upper Housing

This section describes how to install the upper housing for a BTS3902E.

Context

NOTE

The camouflage shell is optional. Following uses the BTS3902E equipped with a camouflage shell as an example.

Procedure

Step 1 Close the housing, and use an M4 Phillips screwdriver to tighten the two captive screws to 1.2 N·m (10.62 lbf·in.), as shown in **Figure 11-5**.

Copyright © Huawei Technologies Co., Ltd.

Figure 11-5 Closing the housing and tightening the screws

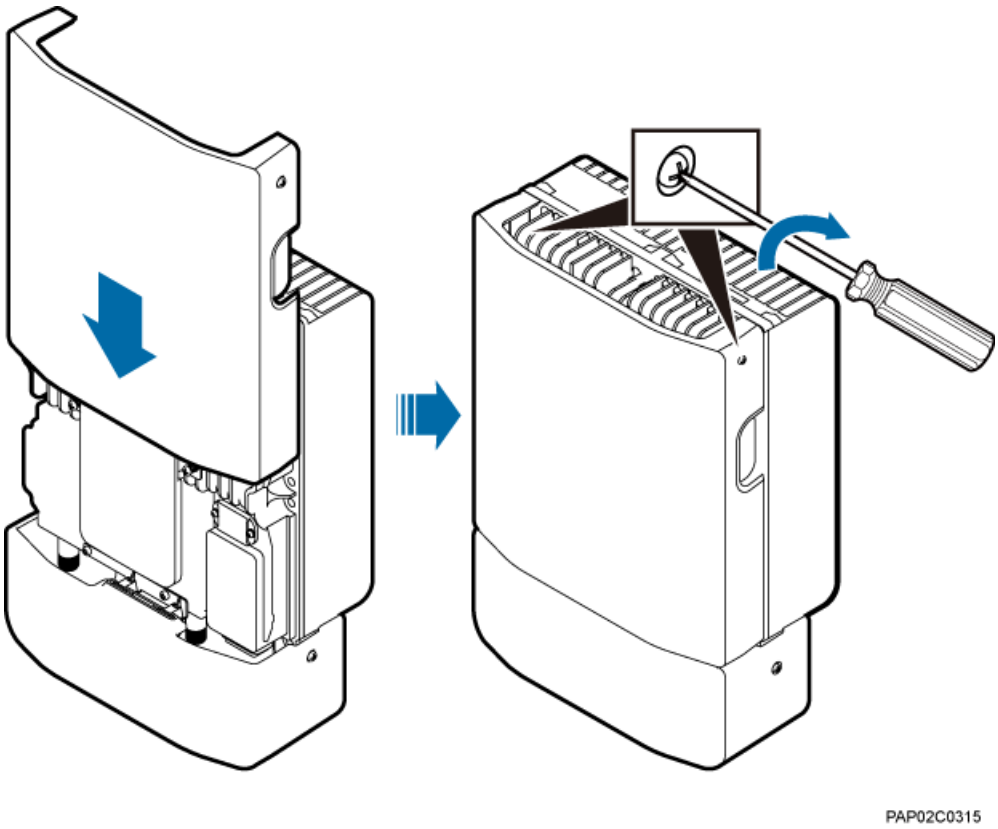

----End

Copyright © Huawei Technologies Co., Ltd.

12 Checking the BTS3902E Hardware Installation

This chapter describes how to check the hardware installation after a BTS3902E is installed.

Table 12-1 provides the checklist for the BTS3902E hardware installation.

Table 12-1 Checklist for the BTS3902E Hardware Installation

SN	Item
1	The position for each device conforms to the engineering drawing and meets the space requirement. Sufficient space is reserved for equipment maintenance.
2	The BTS3902E is securely installed and the installed BTS3902E has a housing.
3	In the wall-mounted scenario, the holes of the mounting bracket are well aligned with the holes of the expansion bolt assemblies. In addition, the adapting plates are secured on the wall evenly and steadily.
4	In the pole-mounted scenario, the supports for the mounting brackets are secured on the pole.
5	The horizontal error of the BTS3902E is less than 3 mm (0.12 in.), and the vertical error is not more than 3 mm (0.12 in.).
6	The outdoor cables are properly installed. The vacant ports are covered with waterproof caps, and the caps are waterproofed.
7	None of power cables and signal cables is short-circuited or reversely connected, when ground impedance of each PGND cable is ≤ 10 ohms. In addition, all these cables are not damaged or broken.
8	Power cables and PGND cables are separately bound from other cables.
9	All BTS3902E-related modules are connected to the closest ground bar using PGND cables.
10	The connectors of each signal cable are intact and securely linked, and these cables are not damaged or broken.

Copyright © Huawei Technologies Co., Ltd.

SN	Item
11	Labels are correct, legible, and complete at both ends of each cable, feeder, and jumper.

Table 12-2 provides the checklist for the installation of an AC surge protection box.

Table 12-2 Checklist for the installation of an AC surge protection box

SN	Item
1	The PG connectors for routing cables on an AC surge protection box are securely installed.
2	The waterproof fillers on an AC surge protection box are not stripped or broken.
3	OT terminals are securely linked to the cables connecting to an AC surge protection box. Cable sheaths are not damaged, and the extra length of each cable is cut without sharp edges.
4	PG connectors are tightened, and waterproof rings are secured.
5	The six screws on the cabling cavity for an AC surge protection box are tightened properly.
6	The axis between the cover plate for and the case of an AC surge protection box is not broken, and the surface of the protection box is not scratched.
7	The cable connections for an AC surge protection box meet the requirements in the operation guide. The cover plate for the cabling cavity is closed after OT terminals are tightened.
8	An AC surge protection box is powered off before installation and maintenance.
9	The protection grounding of an AC surge protection box and the surge protection grounding of a building share one group of ground conductors.
10	An AC surge protection box must be installed or maintained in dry conditions.

Copyright © Huawei Technologies Co., Ltd.

13 Performing a Power-On Check on the BTS3902E

This chapter describes the procedure for performing a power-on check on the BTS3902E.

NOTICE

After you unpack a BTS3902E, you must power it on within 24 hours. If you power off the BTS3902E for maintenance, you must restore power to it within 24 hours.

Figure 13-1 shows the BTS3902E power-on check procedure.

Copyright © Huawei Technologies Co., Ltd.

Figure 13-1 BTS3902E power-on check procedure

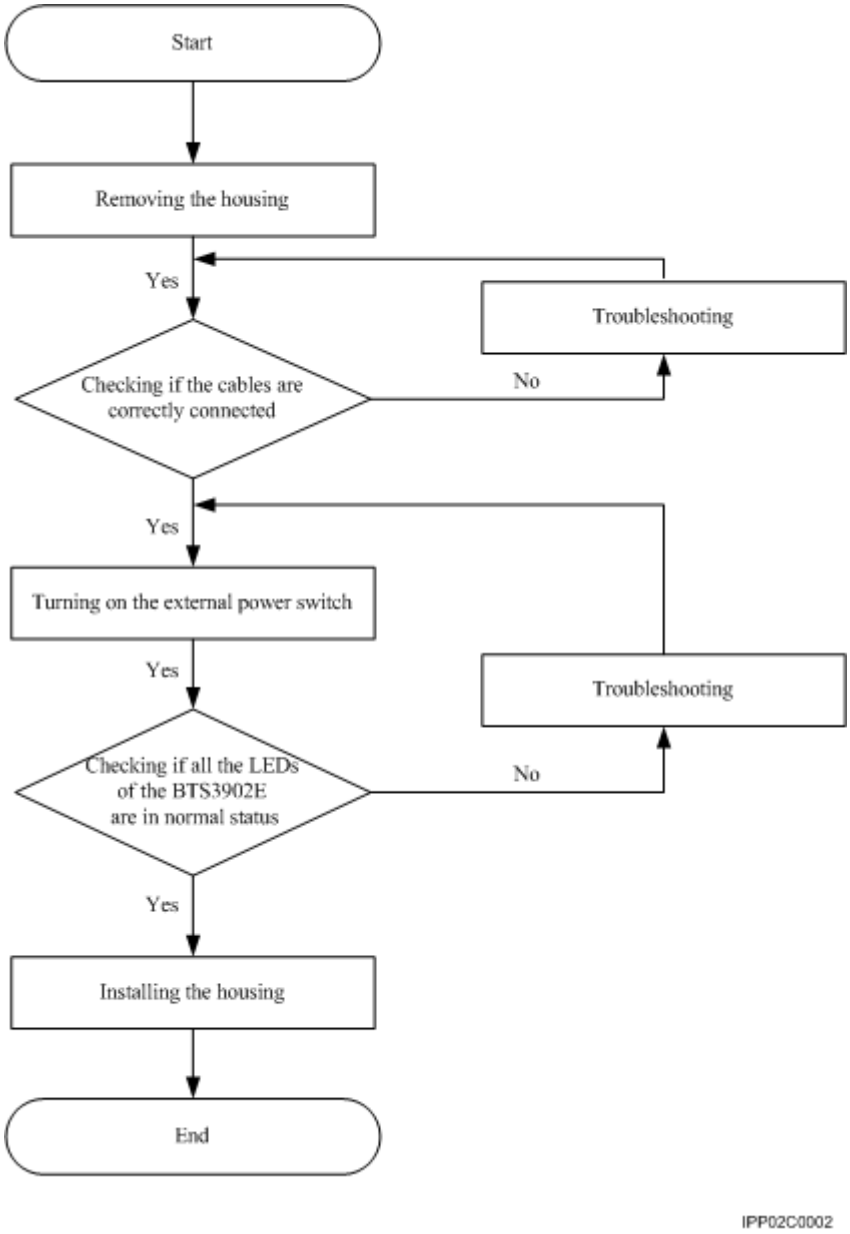

Copyright © Huawei Technologies Co., Ltd.

14 References

About This Chapter

This chapter describes reference information during installation.

14.1 Preparing OT Terminals of the AC Input Power Cable to the AC Surge Protection Box
This section describes for preparing OT terminals for connecting one end of the AC input power cable to an AC surge protection box.

14.2 Adding a Waterproofed Round DC Connector to the BTS3902E Power Cable on the BTS3902E Side
This section describes how to add a waterproofed round DC connector to the BTS3902E power cable on the BTS3902E side.

14.3 Installing a Ground Clip
This section describes how to install a ground clip on a fast Ethernet or gigabit Ethernet (FE/GE) cable.

Copyright © Huawei Technologies Co., Ltd.

14.1 Preparing OT Terminals of the AC Input Power Cable to the AC Surge Protection Box

This section describes for preparing OT terminals for connecting one end of the AC input power cable to an AC surge protection box.

14.1.1 Preparing OT Terminals of the AC Input Power Cable to the SPD60D

This section describes for preparing OT terminals for connecting one end of the AC input power cable to an SPD60D.

Context

Figure 14-1 shows the cable diagram on labels.

Figure 14-1 Cable diagram on labels

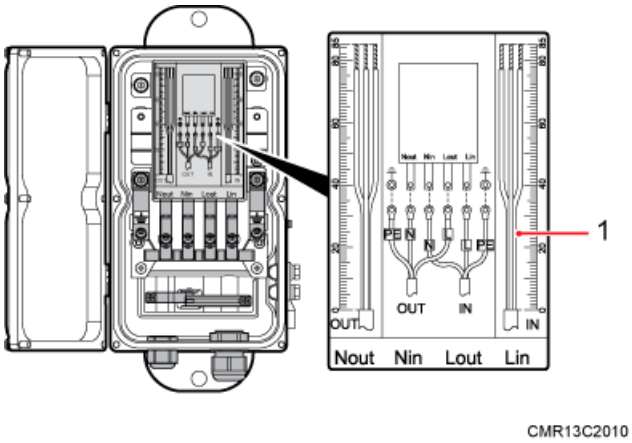

(1) Cable diagram on labels

Procedure

Step 1 Cut the cable to the required length based on the actual cable route.

Step 2 If the power cable is longer than or equal to 5 m (16.4 ft), cut the corrugated pipe into multiple 5-meter-long pieces; if the cable is shorter than 5 m (16.4 ft), cut the corrugated pipe based on the actual length of the power cable.

NOTE

Following is based on the power cable longer than or equal to 5 m (16.4 ft).

Step 3 Lead the power cable through corrugated pipes, and add a connector between two corrugated pipes, as shown in Figure 14-2.

Copyright © Huawei Technologies Co., Ltd.

Figure 14-2 Leading the power cable through corrugated pipes

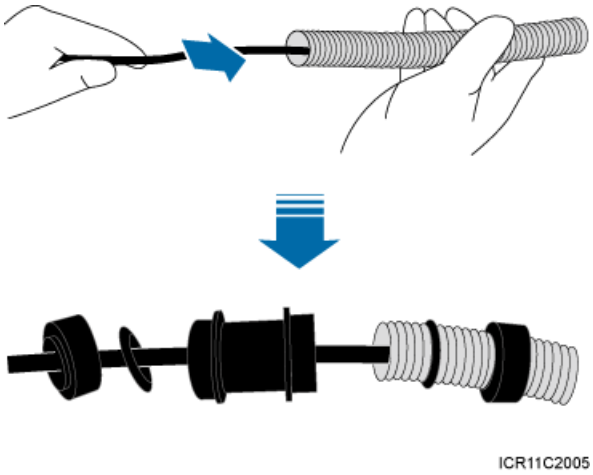

Step 4 Join the corrugated pipes, as shown in **Figure 14-3**.

Figure 14-3 Joining corrugated pipes

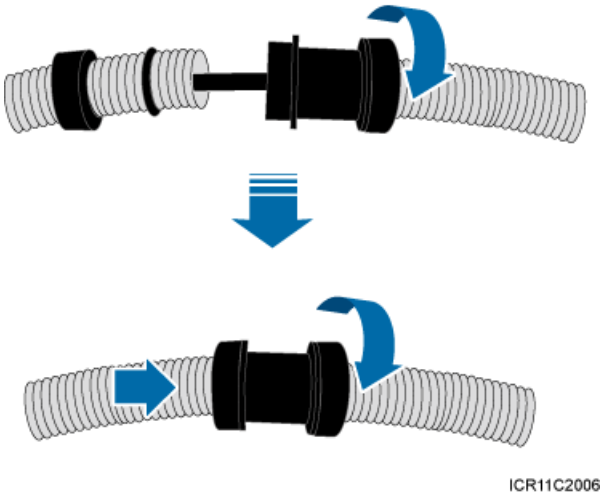

Step 5 Determine the length of the power cable for different operations based on the labels, as shown in **Figure 14-4**.

Figure 14-4 Determining the length of the power cable

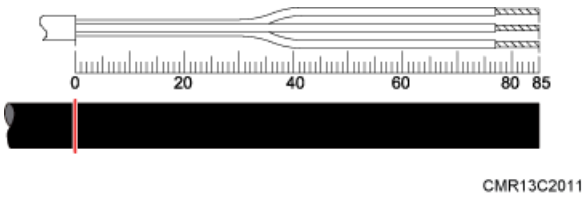

Copyright © Huawei Technologies Co., Ltd.

Step 6 Use a utility knife to strip the specified length of the sheath and shield layer off the power cable, as shown in **Figure 14-5**.

Figure 14-5 Stripping the specified length of the sheath and shield layer

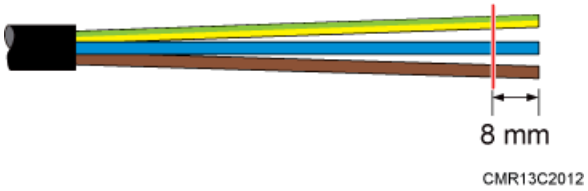

Step 7 Strip the sheath off each core wire, as shown in **Figure 14-6**.

Figure 14-6 Stripping the sheath off each core wire

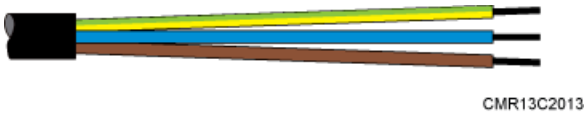

Step 8 Add OT terminals to the three core wires, as shown in **Figure 14-7**.

Figure 14-7 Adding OT terminals

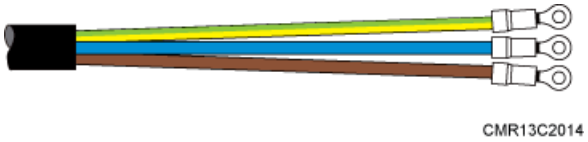

----End

14.1.2 Preparing OT Terminals to the Power Cable Connected to the SPM60A

This section describes the procedure for Preparing OT terminals to the power cable connected to the SPM60A.

Context

Figure 14-8 shows the SPM60A power cable diagram on label.

Copyright © Huawei Technologies Co., Ltd.

Figure 14-8 SPM60A power cable diagram on label

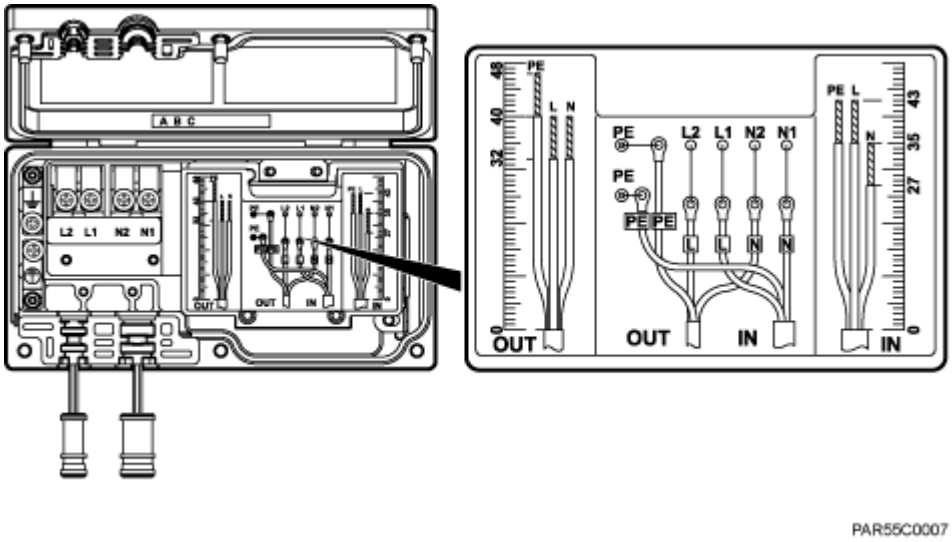

(1) SPM60A power cable diagram on label

NOTE

- The OUT cable is a power cable between the SPM60A and the base station. The IN cable is a power cable between the SPM60A and power equipment.
- The same method is used for adding OT terminals to the OUT and IN cables, except that different lengths of jacket need to be stripped off the wires of the OUT and IN cables. This section only uses adding OT terminals to an IN cable as an example.

Procedure

Step 1 Cut each cable to a length suitable for the actual cable routing.

Step 2 If the power cable is longer than or equal to 5 m (16.4 ft), cut the corrugated pipe into pieces, each with a length of 5 m (16.4 ft). If the cable is shorter than 5 m, cut the corrugated pipe based on the actual length of the power cable.

NOTE

The following procedure uses the power cable longer than or equal to 5 m (16.4 ft) as an example.

Step 3 Route the power cable through corrugated pipes, and add a connector between two corrugated pipes, as shown in **Figure 14-9**.

Copyright © Huawei Technologies Co., Ltd.

Figure 14-9 Routing the power cable through corrugated pipes

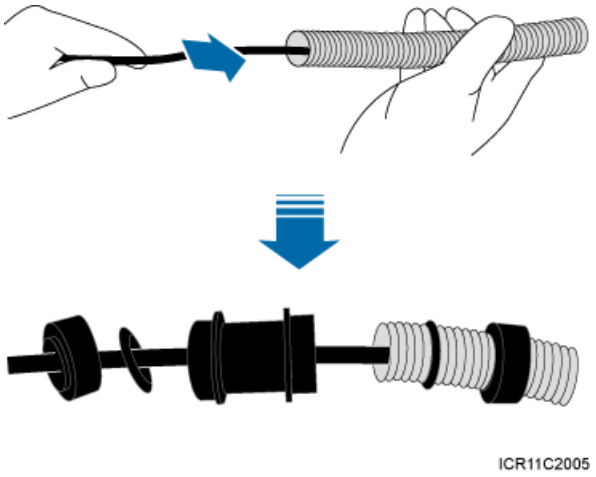

Step 4 Connect the corrugated pipes, as shown in **Figure 14-10**.

Figure 14-10 Connecting corrugated pipes

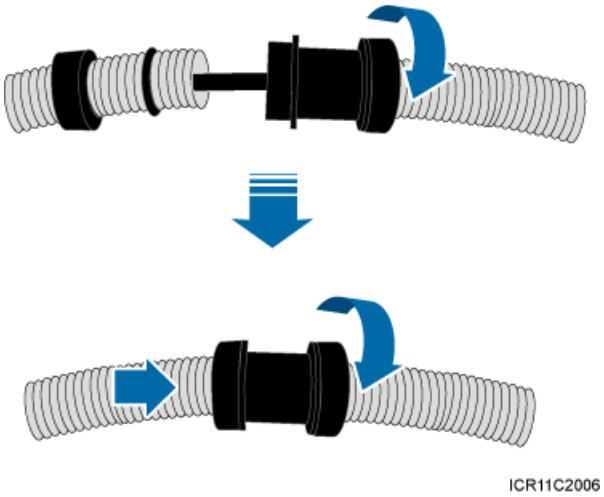

Step 5 Determine the length of the cable for different operations based on the power cable diagram on the SPM60A label, as shown in **Figure 14-11**.

Figure 14-11 Determining the length of the power cable for the SPM60A

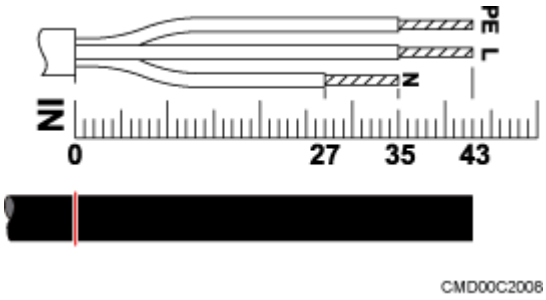

Copyright © Huawei Technologies Co., Ltd.

Step 6 Strip a specified length of the jacket and shield layer off the power cable for the SPM60A, as shown in **Figure 14-12**.

Figure 14-12 Stripping the jacket and shield layer off the power cable for the SPM60A

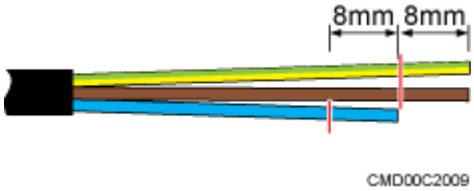

Step 7 Strip the jacket off each core wire of the power cable for the SPM60A, as shown in **Figure 14-13**.

Figure 14-13 Stripping the jacket off the core wires of the power cable for the SPM60A

Step 8 Add OT terminals to core wires for the SPM60A, as shown in **Figure 14-14**.

Figure 14-14 Adding OT terminals to the core wires of the power cable for the SPM60A

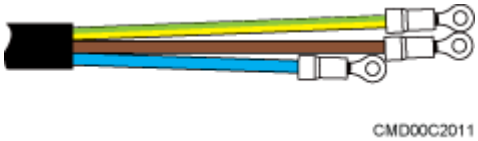

----End

14.2 Adding a Waterproofed Round DC Connector to the BTS3902E Power Cable on the BTS3902E Side

This section describes how to add a waterproofed round DC connector to the BTS3902E power cable on the BTS3902E side.

Context

Table 14-1 lists and **Figure 14-15** illustrates the pin assignment for the wires of the BTS3902E power cable.

Copyright © Huawei Technologies Co., Ltd.

Table 14-1 Cable description

BTS3902E Side	Cable	Color of the Core Wire (North American Standard)	Color of the Core Wire (European Standard)
Waterproofed round DC connector	NEG(-) wire	Blue	Blue
	RTN(+) wire	Black	Brown

Figure 14-15 Connections of the BTS3902E power cable (using the European standard as an example)

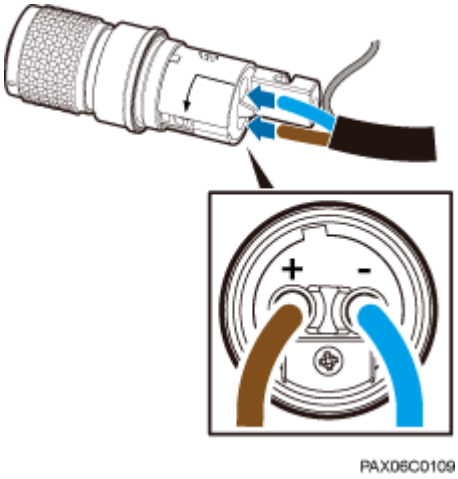

NOTE

The colors and structures of cables vary depending on the region.

Figure 14-16 shows the components of a waterproofed round DC connector.

Figure 14-16 Material list

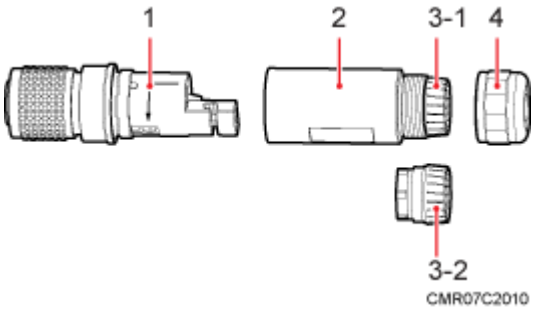

(1) Protective cover (2) Socket (3) Clamping jaw 1 (4) Nut

Copyright © Huawei Technologies Co., Ltd.

Procedure

Step 1 Leave a specified length of the cable, lead the nut, clamping jaw (including the waterproof gasket), and socket through the cable, and partially tighten the nut, as shown in **Figure 14-17**.

Figure 14-17 Leading the nut, clamping jaw, waterproof gasket, and socket through the cable

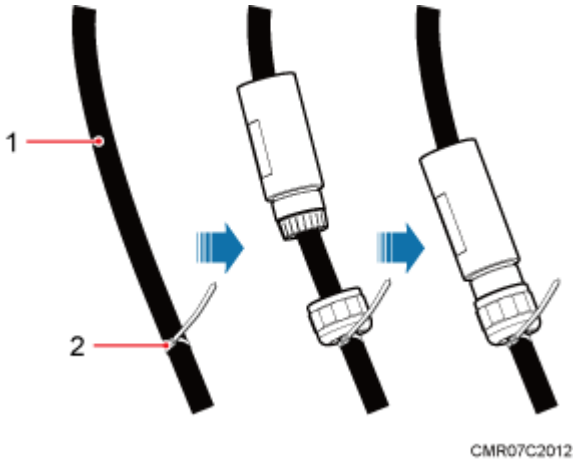

(1) Power Cable (2) Plastic cable tie

Step 2 Use the stripping ruler card to measure correct lengths. Strip about 48 mm (1.89 in.) of the sheath off the cable and 17 mm (0.67 in.) off the sheath of each wire, and assemble the shield layer, as shown in **Figure 14-18**.

NOTE

The stripping ruler card is delivered with the components of the connector.

NOTICE

- Use a pair of diagonal pliers to cut the padding.
- Gently strip the insulation sheath to avoid damage to the conductor metal.
- Ensure that the wires do not split during cable stripping.

Figure 14-18 Cable stripping

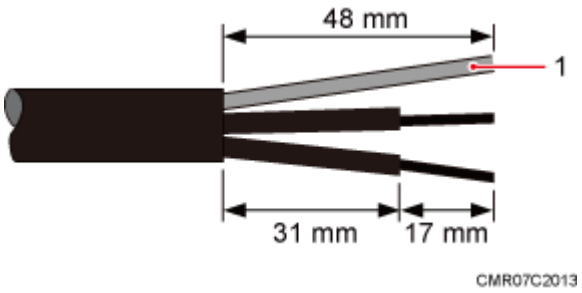

(1) Shield layer

Copyright © Huawei Technologies Co., Ltd.

Step 3 Connect the black or brown core wire labeled RTN(+) to the + port on the connector and the blue core wire labeled NEG(-) to the - port. Then use a Phillips screwdriver to tighten the two screws on both sides to 1.4 N·m (12.39 lbf·in.), as shown in **Figure 14-19**.

Figure 14-19 Connecting the core wires to the connector and tightening the core wires

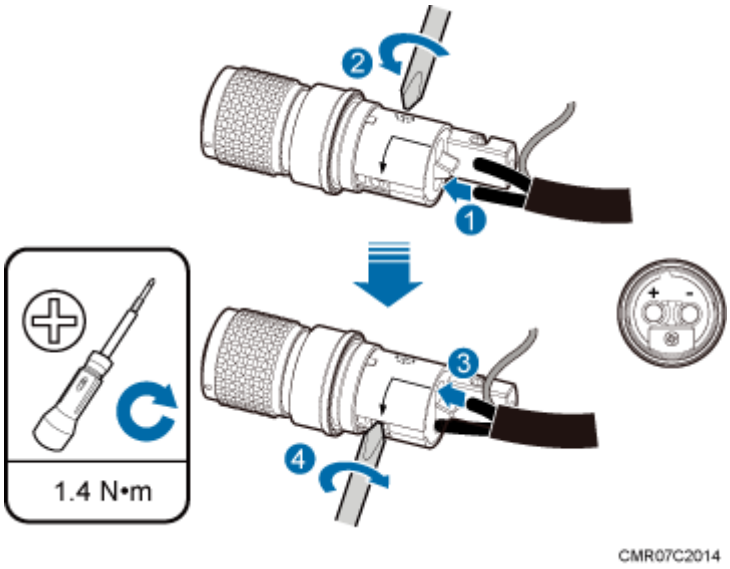

Step 4 Pull each wire slightly to check whether the connections are secure. If the cable slides outward or the wire of the cable is exposed outside the hole for the cable, remove the cable, cut the split wires, and then strip the jacket and install the cable again.

Step 5 Insert the assembled shield layer into the shield slot, and tighten the screw at the bottom to 1.4 N·m (12.39 lbf·in.) to secure the shield layer, as shown in **Figure 14-20**.

NOTE

Cut the extra shield layer using the diagonal pliers.

Copyright © Huawei Technologies Co., Ltd.

Figure 14-20 Installing and securing the shield layer

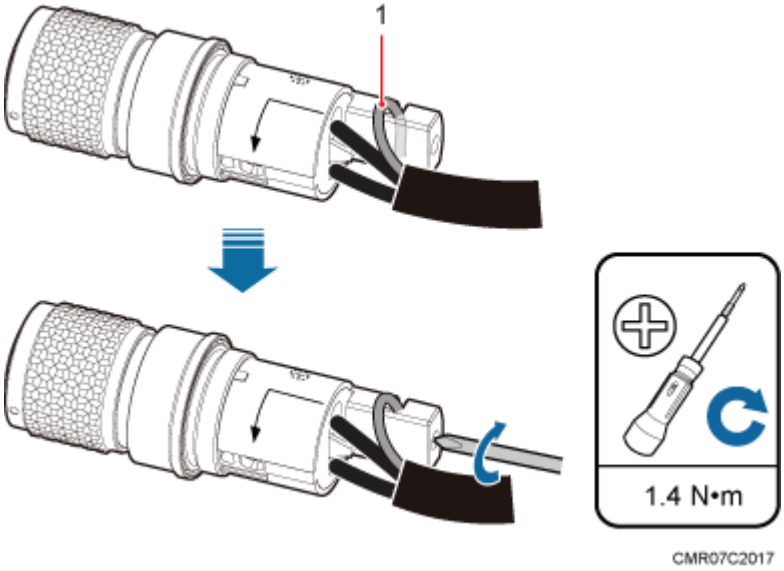

(1) Shield layer

Step 6 Use your hand to screw the gasket and the protective cover until the red line on the gasket cannot be seen, as shown in **Figure 14-21**.

Figure 14-21 Tightening the gasket and the protective cover

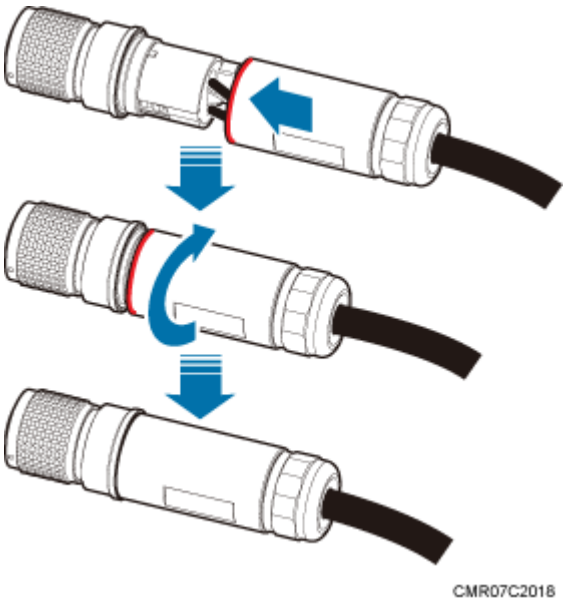

Step 7 Partially tighten the nuts and socket, and then use a combination wrench (capacity: 28 mm [1.1 in.]) to secure the nuts, as shown in **Figure 14-22**.

Copyright © Huawei Technologies Co., Ltd.

Figure 14-22 Tightening the nuts and socket

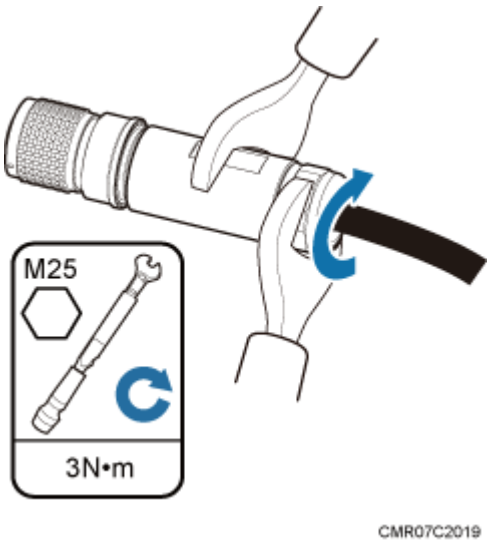

Step 8 Use a multimeter to check the connection reliability, as shown in **Figure 14-23**.

Figure 14-23 Using a multimeter to check the connection reliability

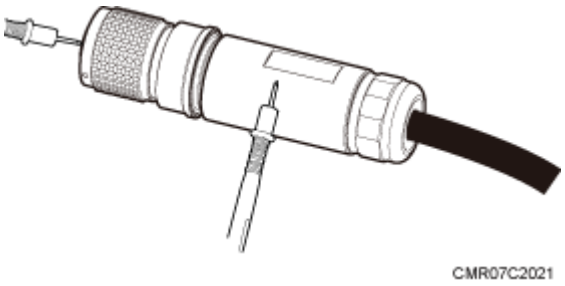

NOTICE

- The ports of the connector cannot be short-circuited.
- Metal jackets and ports of the connector cannot be short-circuited.

Step 9 If the device is installed outdoors, the connector must be wrapped with three layers of PVC insulation tape, as shown in **Figure 14-24**.

NOTICE

Do not wrap the connector with more than three layers of PVC insulation tape.

Copyright © Huawei Technologies Co., Ltd.

Figure 14-24 Wrap three layers of PVC insulation tape

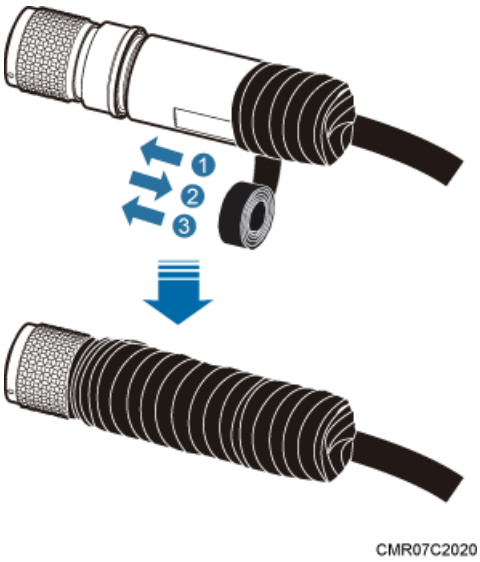

----End

14.3 Installing a Ground Clip

This section describes how to install a ground clip on a fast Ethernet or gigabit Ethernet (FE/GE) cable.

Procedure

Step 1 Determine the position for installing the ground clip on the cable based on the actual cable route.

Step 2 Use a utility knife to strip the sheath off the FE/GE cable for about 32 mm (1.26in.) to expose the shield layer, as shown in **Figure 14-25**.

NOTICE

Do not damage the shield layer when stripping the sheath off the cable.

Figure 14-25 Stripping the sheath off the FE/GE cable

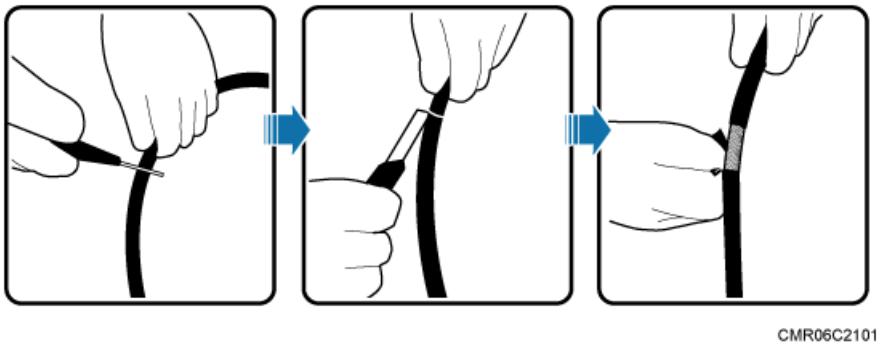

Copyright © Huawei Technologies Co., Ltd.

Step 3 Install the ground clip on the shield layer of the cable, and then use a screwdriver to tighten the screws on the ground clip, as shown in **Figure 14-26**.

Figure 14-26 Tightening the screws on a ground clip

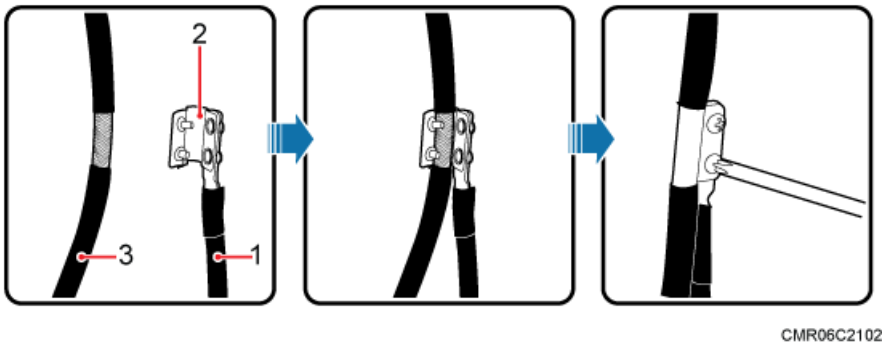

(1) Ground cable (2) Ground clip (3) FE/GE cable

Step 4 Wrap three layers of waterproof tape and three layers of polyvinyl chloride (PVC) insulation tape at the ground clip.

NOTICE

- Wrap the tape around the clip from bottom up, then from top down, and finally from bottom up. Do not cut the tape until all the three layers of the tape are already wrapped. When wrapping tape, be sure that each layer of tape overlaps more than 50% of the preceding layer.
- The degree between the ground cable and the FE/GE cable is not greater than 15°. When the FE/GE cable is routed vertically, the ground cable must be routed downwards.

Figure 14-27 Wrapping waterproof tape and PVC insulation tape

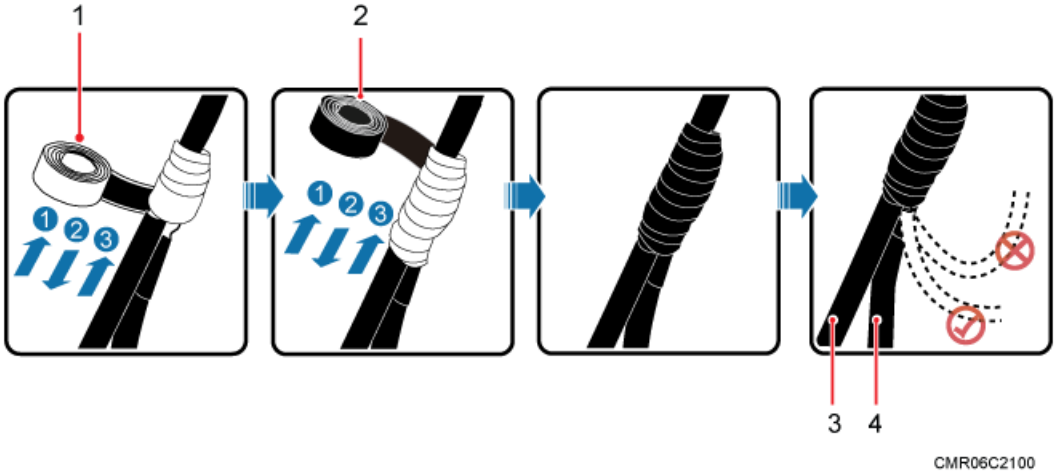

(1) Waterproof tape (2) PVC insulation tape (3) FE/GE cable (4) Ground cable

Copyright © Huawei Technologies Co., Ltd.

Step 5 Connect the ground cable to an external ground bar.

----End

Copyright © Huawei Technologies Co., Ltd.