FCC TEST REPORT for Part 15G
No. 151101116SHA-001R1

Applicant	:	Huawei Technologies Co.,Ltd Administration Building, Headquarters of Huawei Technologies Co., Ltd., Bantian, Longgang District, Shenzhen, China
Manufacturer	:	Huawei Technologies Co.,Ltd Administration Building, Headquarters of Huawei Technologies Co., Ltd., Bantian, Longgang District, Shenzhen, China
Product Name	:	PLC CCO Unit
Type/Model	:	PLC CCO01A
TEST RESULT	**:**	**PASS**

SUMMARY

The equipment complies with the requirements according to the following standard(s) or specification:

47CFR Part 15 (2014): Radio Frequency Devices (Subpart G)

ANSI C63.4 (2014): American National Standard for Methods of Measurement of Radio-Noise Emissions from Low-Voltage Electrical and Electronic Equipment in the Range of 9 kHz to 40 GHz

Date of issue: Dec 2, 2015

Prepared by:

Wakeyou Wang (*Project Engineer*)

Reviewed by:

Daniel Zhao (*Reviewer*)

Description of Test Facility

Name: Intertek Testing Services Limited Shanghai
Address: Building 86, No. 1198 Qinzhou Rd., North, Shanghai 200233, P.R.China

FCC Registration Number: 236597
IC Assigned Code: 2042B-1

Name of contact: Jonny Jing
Tel: +86 21 61278271
Fax: +86 21 54262353

Content

SUMMARY **1**
1 GENERAL INFORMATION **4**
1.1 Description of Equipment Under Test (EUT) 4
1.2 Description of Client 5
1.3 Description of Test Facility 5
2 TEST SPECIFICATIONS **6**
2.1 Standards or specification 6
2.2 Mode of operation during the test 6
2.3 Test software list 6
2.4 Test peripherals list 6
2.5 Instrument list 7
2.6 Test Summary 8
3 CONDUCTED EMISSION **9**
3.1 Limits 9
3.1.1 Limits for conducted emission of class A device 9
3.1.2 Limits for conducted emission of class B device 9
3.2 Test setup 10
3.3 Test Setup and Test Procedure 11
3.4 Test Protocol 12
4 RADIATED EMISSION **13**
4.1 Radiated emission limits 13
4.2 Test Environment 14
4.3 Description of the Test Sites 16
4.4 Test Setup and Test Procedure 22
4.5 Test Protocol 23

1 GENERAL INFORMATION

1.1 Description of Equipment Under Test (EUT)

Product Name	:	PLC CCO Unit
Type/Model	:	PLC CCO01A
Description of EUT	:	There is one model only.
Rating	:	DC 12V From Adapter Input AC 90V~270V 50/60Hz
Modulation	:	OFDM
Number of carriers	:	512
Carrier spacing	:	24.414kHz
Channel bandwidth	:	200kHz
Notch capability/ control	:	Without such function
Power settings/control	:	-5~7 (7 is the highest power and tested as the worst mode)
Duty factor of signal injection	:	50%
Category of EUT	:	Class B
EUT type	:	☒ Overhead installation ☒ Underground installation
Operation Frequency range for 15G	:	2MHz - 12MHz
Sample received date	:	Oct 22, 2015
Sample identification No.	:	/
Date of test	:	Oct 22, 2015 - Oct 29, 2015
Power line type	:	☐ Medium-voltage ☒ low –voltage
FCC ID	:	QISCCO01A

1.2 Description of Client

Applicant	:	Huawei Technologies Co.,Ltd Administration Building, Headquarters of Huawei Technologies Co., Ltd., Bantian, Longgang District, Shenzhen, China
Name of contact	:	Zhang Xinghai
Tel	:	8675528970299
Fax	:	8675589650226
Email	:	zhangxinghai@huawei.com
Manufacturer	:	Huawei Technologies Co.,Ltd Administration Building, Headquarters of Huawei Technologies Co., Ltd., Bantian, Longgang District, Shenzhen, China

1.3 Description of Test Facility

☒

Name	:	Intertek Testing Service Shanghai
Address	:	Building 86, No. 1198 Qinzhou Road(North), Shanghai 200233, P.R. China
Telephone	:	86 21 61278200
Telefax	:	86 21 54262353

In-site location

☒

Name	:	Huawei Technologies Co.,Ltd
Address	:	Block F & G, Huawei Industrial Base, Bantian, Shenzhen, China

2 TEST SPECIFICATIONS

2.1 Standards or specification

47CFR Part 15 (2014)
ANSI C63.4 (2014)
FCC-11-160A1

2.2 Mode of operation during the test

Within this test report, EUT was tested with modulation and tested under its rating voltage and frequency.

2.3 Test software list

Test Items	Software	Manufacturer	Version
/	/	/	/
/	/	/	/

2.4 Test peripherals list

Item No.	Name	Band and Model	Description
/	/	/	/
/	/	/	/

2.5 Instrument list

Selected	Instrument	Model	Manufactory	EC no.	Valid until date
☒	EMI Test Receiver	ESPI3	R&S	101505	11/3/2015
☒	Bilog Antenna	CBL 6112D	TESEQ	25221	6/27/2016
☒	Loop Antenna	FMZB1516	Schwarzbeck	1516115	5/27/2017

2.6 Test Summary

This report applies to tested sample only. The test results have been compared directly with the limits, and the measurement uncertainty is recorded. This report shall not be reproduced in part without written approval of Intertek Testing Service Shanghai Limited.

TEST ITEM	FCC REFERANCE	RESULT	NOTE
Conducted emission	15.611(a), 15.107	NA	Not applied to Access BPL.
Radiated emission	15.611(b), 15.109	Pass	/

Notes: 1: NA =Not Applicable

3 Conducted emission

Test result: NA

3.1 Limits

3.1.1 Limits for conducted emission of class A device

Frequency range (MHz)	Limits dB(μV) Quasi-peak	Average
0.15 ~ 0.5	79	66
0.5 ~ 30	73	60
Note: If the limit for the measurement with the average detector is met when using a receiver with a quasi-peak detector, the equipment under test shall be deemed to meet both limits and the measurement using the receiver with an average detector need not be carried out.		

3.1.2 Limits for conducted emission of class B device

Frequency range (MHz)	Limits dB(μV) Quasi-peak	Average
0.15 ~ 0.5	66 ~ 56 *	56 ~ 46 *
0.5 ~ 5	56	46
5 ~ 30	60	50
Note: 1. * Means the limit decreasing linearly with the logarithm of the frequency in the range 0.15MHz to 0.5MHz 2. If the limit for the measurement with the average detector is met when using a receiver with a quasi-peak detector, the equipment under test shall be deemed to meet both limits and the measurement using the receiver with an average detector need not be carried out.		

3.2 Test setup

☐ For table top equipment

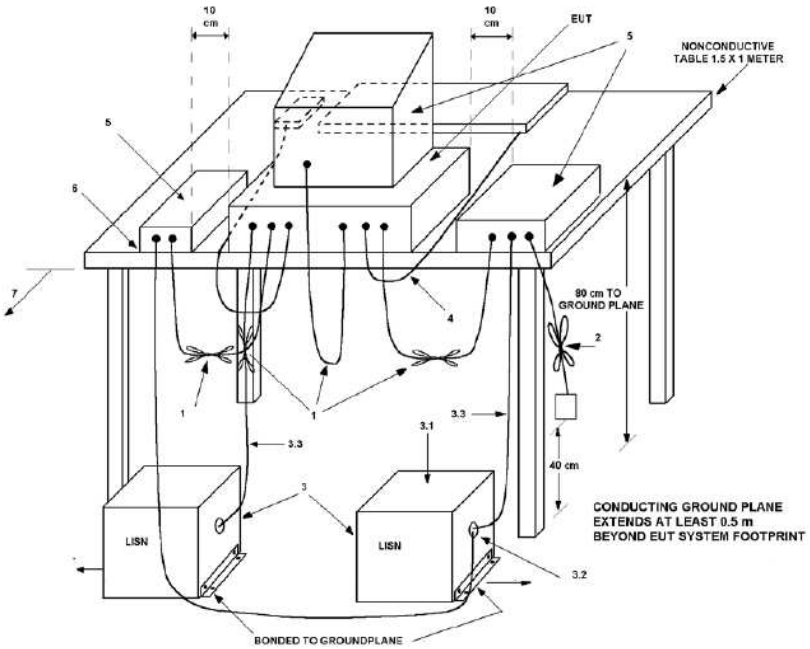

☐ For floor standing equipment

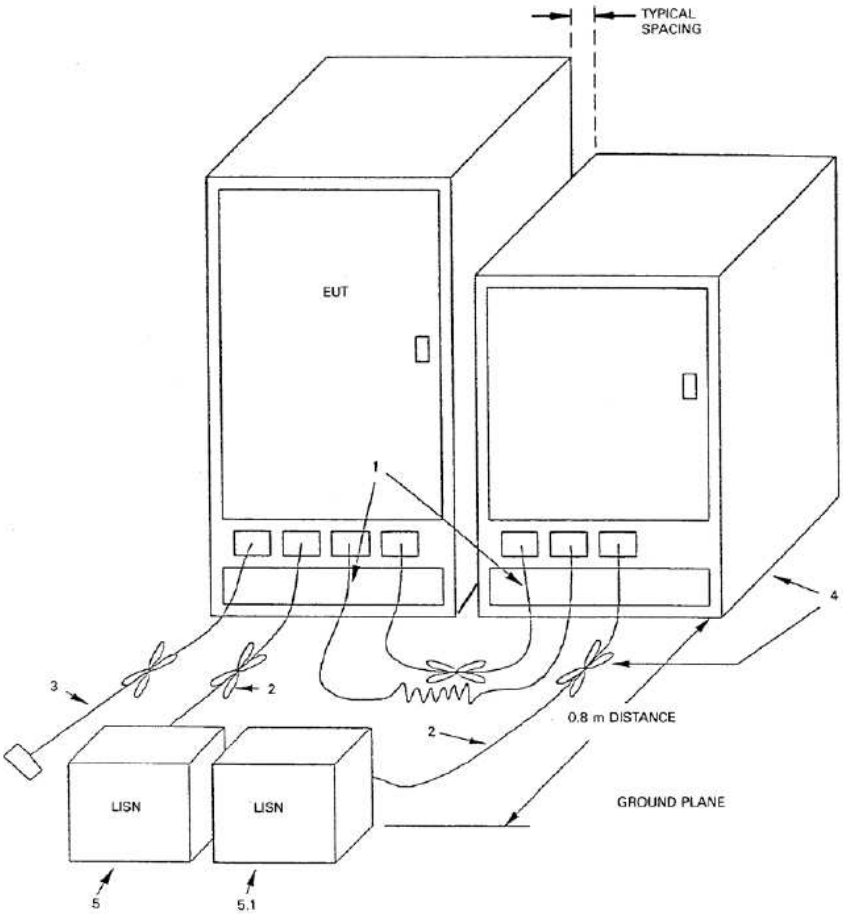

3.3 Test Setup and Test Procedure

Measurement was performed in shielded room, and instruments used were following clause 4 and clause 5 of ANSI 63.4.
Detailed test procedure was following clause 7.3 of ANSI 63.4.
EUT arrangement and operation conditions were according to clause 6 and clause 7 of ANSI 63.4.
Frequency range 150kHz – 30MHz was checked and EMI receiver measurement bandwidth was set to 9 kHz.

3.4 Test Protocol

Temperature : °C
Relative Humidity : %

L line

Test Data:

Frequency (MHz)	Quasi-peak			Average		
	level dB(μV)	Limit dB(μV)	Margin (dB)	level dB(μV)	limit dB(μV)	Margin (dB)

N line:

Test Data:

Frequency (MHz)	Quasi-peak			Average		
	level dB(μV)	Limit dB(μV)	Margin (dB)	level dB(μV)	limit dB(μV)	Margin (dB)

Notes: All possible modes of operation were investigated. Only the worst case emissions was measured.

4 Radiated emission

Test result: Pass

4.1 Radiated emission limits

Frequency (MHz)	Permitted limit in dBμV/m (Quasi-peak) of Measurement Distance 30m
0.009 – 0.490	107.6-20lg (F_{kHz})
0.490 – 1.705	87.6-20lg (F_{kHz})
1.705 – 30.0	29.5
Note: for the measurement distance other than 30m, the limit is varied according to 40dB/10 decades.	

Frequency (MHz)	Permitted limit in dBμV/m (Quasi-peak) of Measurement Distance 3m
30 – 88	40.0
88 – 216	43.5
216 – 960	46.0
Above 960	54.0
Note: for the measurement distance other than 3m, the limit is varied according to 20dB/10 decades.	

4.2 Test Environment

☒ Measurement Principles for Access BPL on Overhead Line Installations

(1) Measurements should normally be performed at the horizontal reference distance as specified in Sections 15.209 and 15.109 of the rules (i.e., 30 meters for frequencies below 30 MHz and 10 meters for frequencies 30-88MHz.) If necessary, due to ambient emissions, for frequencies below 30 MHz, measurements may be performed at a closer distance such as 10 meters (or 3 meters if necessary for safety or because measurements cannot practically be performed at 30 meters or 10 meters) from the overhead line. Distance corrections are to be made in accordance with paragraph (4), below.

(2) Testing shall be performed at distances of 0, 1/4, 1/2, 3/4 and 1 wavelength down the line from the BPL injection point on the power line. Wavelength spacing is based on the mid-band frequency used by the EUT. In addition, if the mid-band frequency exceeds the lowest frequency injected onto the power line by more than a factor of two, testing shall be extended in steps of 1/2 wavelength of the mid-band frequency until the distance equals or exceeds 1/2 wavelength of the lowest frequency injected. (For example, if the device injects frequencies from 3 to 27 MHz, the wavelength corresponding to the mid-band frequency of 15 MHz is 20 meters, and wavelength corresponding to the lowest injected frequency is 100 meters. Measurements are to be performed at 0, 5, 10, 15, and 20 meters down line—corresponding to zero to one wavelength at the mid-band frequency. Because the mid-band frequency exceeds the minimum frequency by more than a factor of two, additional measurements are required at 10-meter intervals until the distance down-line from the injection point equals or exceeds 1/2 of 100 meters. Thus, additional measurement points are required at 30, 40, and 50 meters down line from the injection point.)

(3) Testing shall be repeated for each Access BPL component (injector, extractor, repeater, booster, concentrator, etc.)

(4) The distance correction used to calculate the applicable extrapolated emission levels for the measurements that are closer than the specified reference distance in Section 15.209 of the rules shall be based on the slant-range distance, which is the diagonal distance from the center of the measurement antenna to the nearest point of the overhead power line carrying the BPL signals being measured, as defined in Section 15.3(hh) of the rules. Calculations of the slant-range distance and the applicable extrapolated emission levels are made according to Equations (1) and (2) in Section 6, below.

(5) For Access BPL devices operating below 30 MHz, if the site-specific alternative extrapolation method is selected, the extrapolation factor is determined by fitting a straight line to measurements of field strength in dBμV/m vs. logarithmic distance in meters from the nearest conductor carrying BPL emissions. Site-specific determination of the extrapolation factor is not permitted for BPL devices that inject signals on the neutral/grounded line of a power system if a grounding conductor (typically located at each pole) is located within 30 meters of any of the measurement locations.

a. Measurements shall be made for at least four horizontal distances from the overhead line, at no less than 3 meters from the lateral plane and differing from each other by at least 3 meters. If these measurements allow a straight line with a negative

slope to be calculated or drawn with reasonable fit (the minimum regression coefficient of multiple correlation would be 0.9), the best straight line fit would be used to calculate field strength at the 30-meter standard measurement distance in the rules.

b. If the four measurements do not satisfy the regression coefficient requirement specified above, measurements at one or more additional distances shall be added until the regression coefficient is satisfied. If the regression coefficient is not satisfied, a site-specific extrapolation rate may not be used.

☒ Measurement Principles for Access BPL in Underground Line Installations

(1) Underground line installations are those in which the BPL device is mounted in, or attached to a padmounted transformer housing or a ground-mounted junction box and couples directly only to underground cables.

(2) Measurements should normally be performed at the horizontal reference distance as specified in Section 15.209 of the rules (i.e., 30 meters for frequencies below 30 MHz and 10 meters for frequencies 30-88MHz.) If necessary, due to ambient emissions, for frequencies below 30 MHz, measurements may be performed at a closer distance such as 3 meters or 10 meters from the inground transformer. Distance corrections are to be made in accordance with Section 15.31(f) in the rules.

(3) Measurements shall be made at positions around the perimeter of the in-ground power transformer where the maximum emissions occur. ANSI C63.4, section 8.1, specifies a minimum of 16 radial angles surrounding the EUT (in-ground transformer that contains the BPL device(s)). If directional radiation patterns are suspected, additional azimuth angles shall be examined.

Test setup is showed as below:

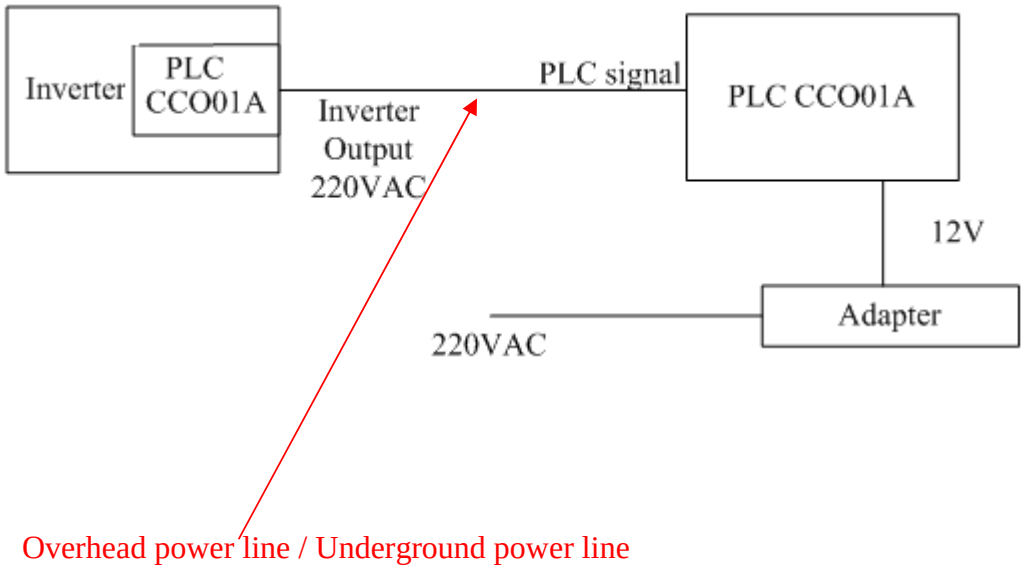

4.3 Description of the Test Sites

☒ Overhead Line Installation Locations:

The device injects frequencies at 2MHz-12.5MHz;
The wavelength of mid-band frequency is 41.2m;
The wavelength corresponding to the lowest injected frequency is 150m and test should be extended to 75m at least in steps of 20.6m.

Location 1: Block F, Huawei Industrial Base, Bantian, Shenzhen, China

Test Point	Test Distance down the line from the BPL injection point (m)
0	0
1/4 * λ	10.3
1/2* λ	20.6
3/4 * λ	30.9
λ	41.2
First step of 20.6m	61.8
Second steps of 20.6m	82.4

Location 2: Block G, Huawei Industrial Base, Bantian, Shenzhen, China

Test Point	Test Distance down the line from the BPL injection point (m)
0	0
1/4 * λ	10.3
1/2* λ	20.6
3/4 * λ	30.9
λ	41.2
First step of 20.6m	61.8
Second steps of 20.6m	82.4

Location 3: Block G, Huawei Industrial Base, Bantian, Shenzhen, China

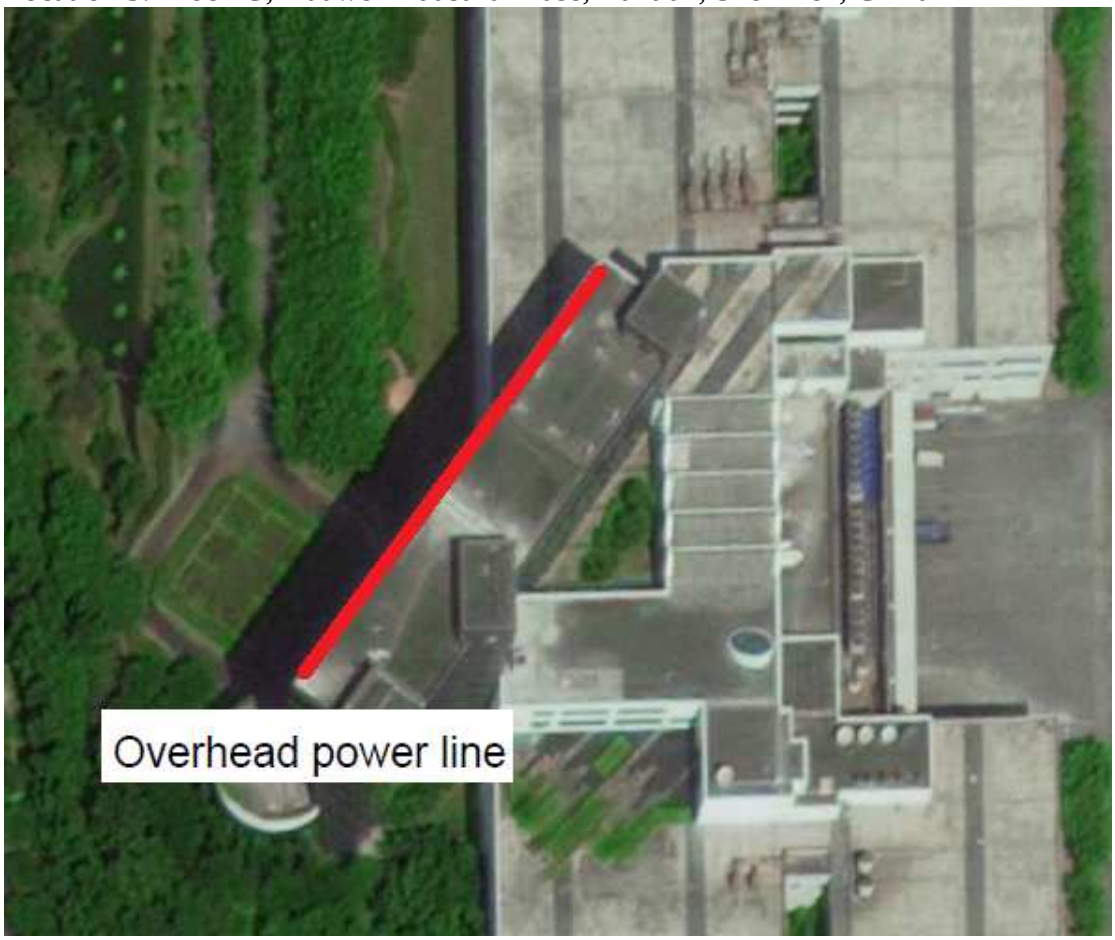

Test Point	Test Distance down the line from the BPL injection point (m)
0	0
1/4 * λ	10.3
1/2* λ	20.6
3/4 * λ	30.9
λ	41.2
First step of 20.6m	61.8
Second steps of 20.6m	82.4

☒ Underground Line Installation Locations:

Measurements shall be made at positions of minimum of 16 radial angles surrounding the EUT, namely 0, 22.5°, 45°…337.5 °.

Location 1: Block F, Huawei Industrial Base, Bantian, Shenzhen, China

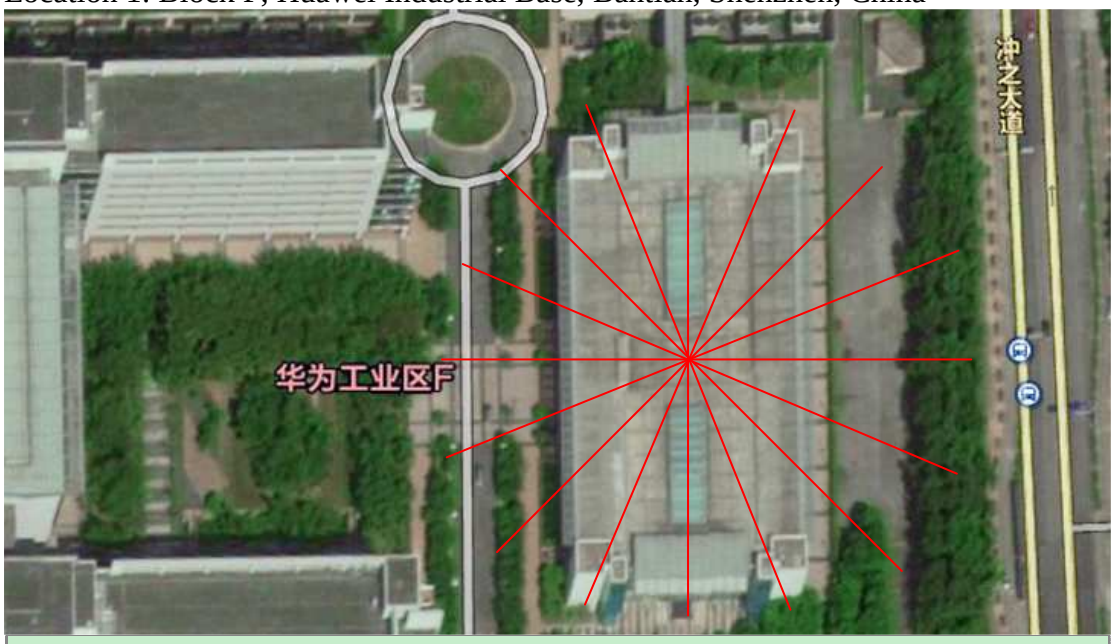

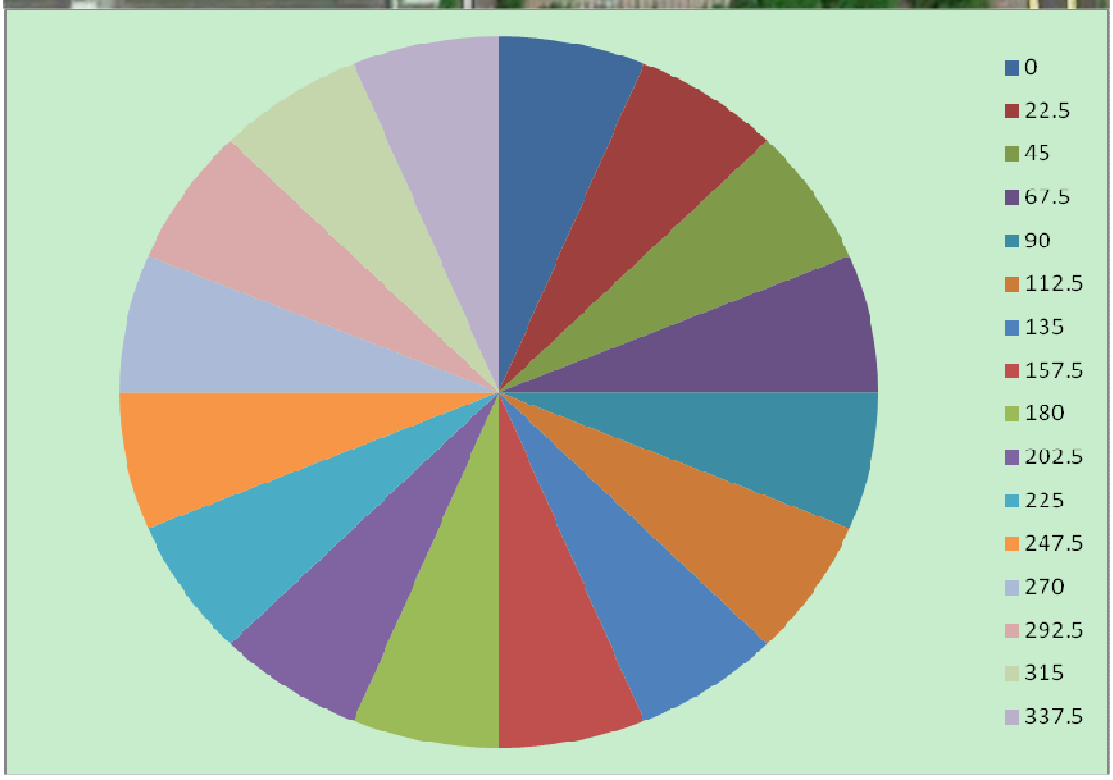

Location 2: Block G, Huawei Industrial Base, Bantian, Shenzhen, China

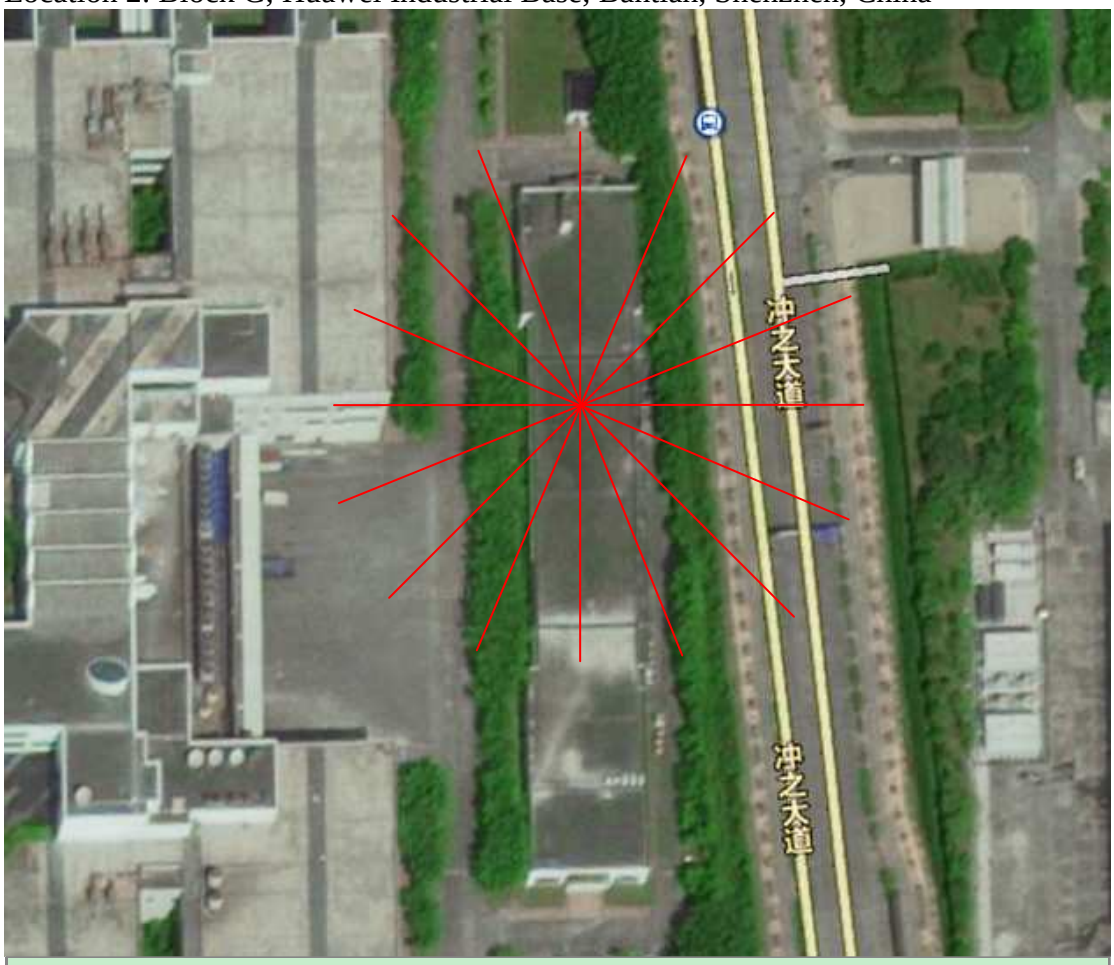

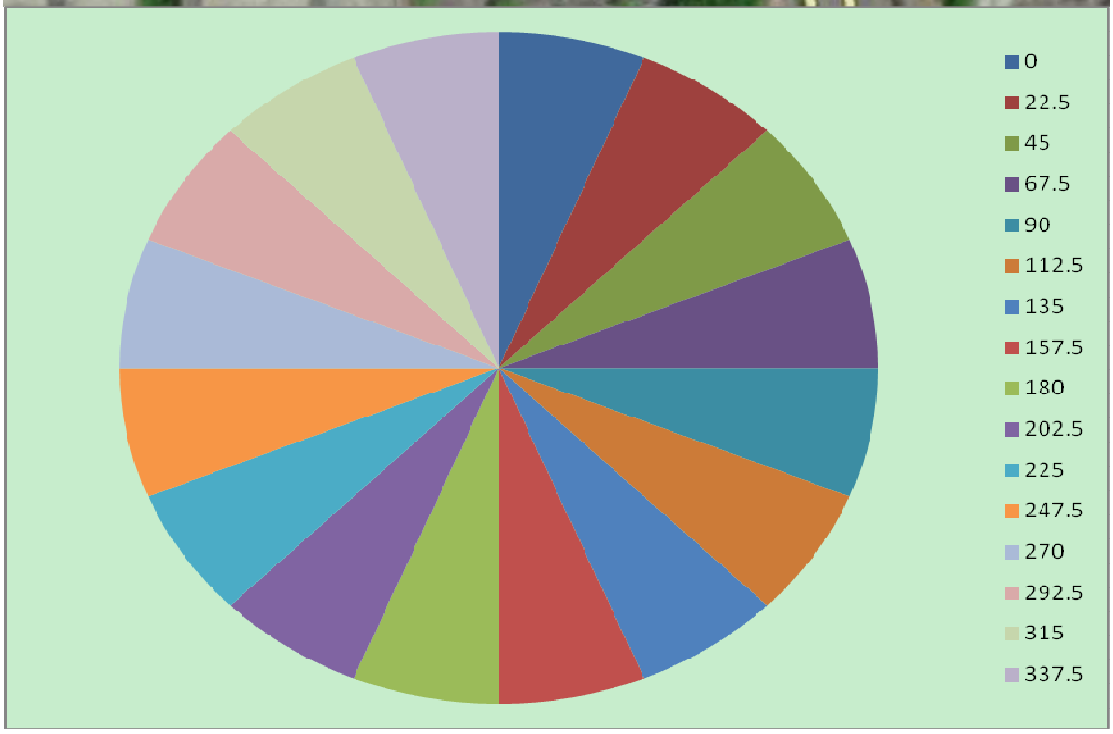

Location 3: Block G, Huawei Industrial Base, Bantian, Shenzhen, China

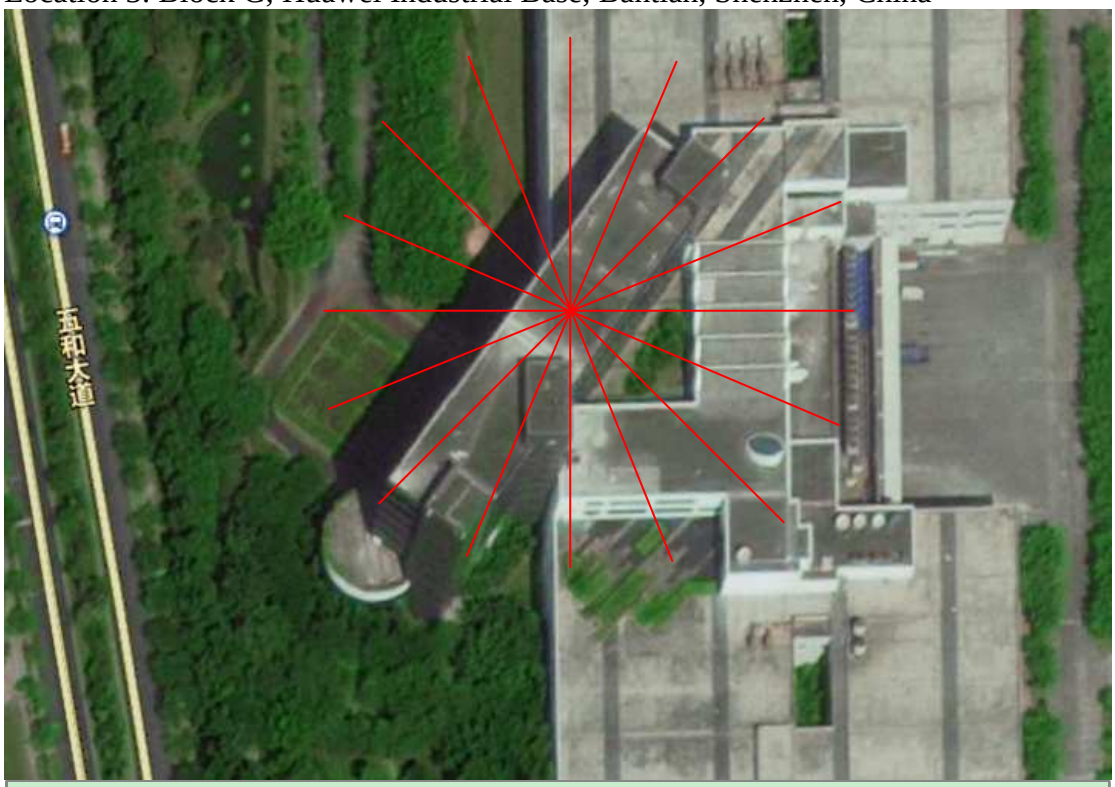

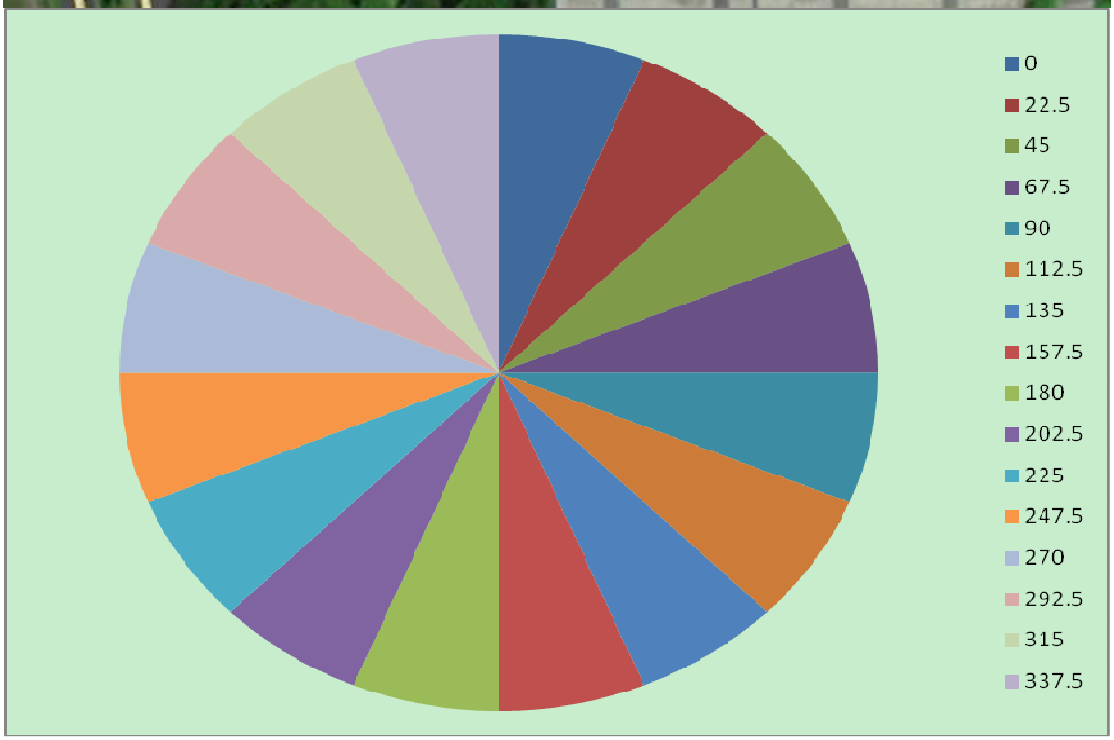

4.4 Test Setup and Test Procedure

The measurement was performed in site.

The horizontal distance between EUT and receiving antenna is **3** meter for both overhead & underground installation.

The required measurement frequency range was checked.

The radiated emission was measured using the R&S Test Receiver / Spectrum Analyzer with the resolutions bandwidth set as:

RBW =9kHz @ receiver mode (9kHz~30MHz)
RBW = 120kHz @ receiver mode (30MHz~1GHz)
RBW / VBW = 1MHz / 3MHz @ spectrum mode (>1GHz for PK) if applied;
RBW / VBW = 1MHz / 10Hz @ spectrum mode (>1GHz for AV) if applied;

☒Slant factor for lower than 30MHz @ overhead installation:

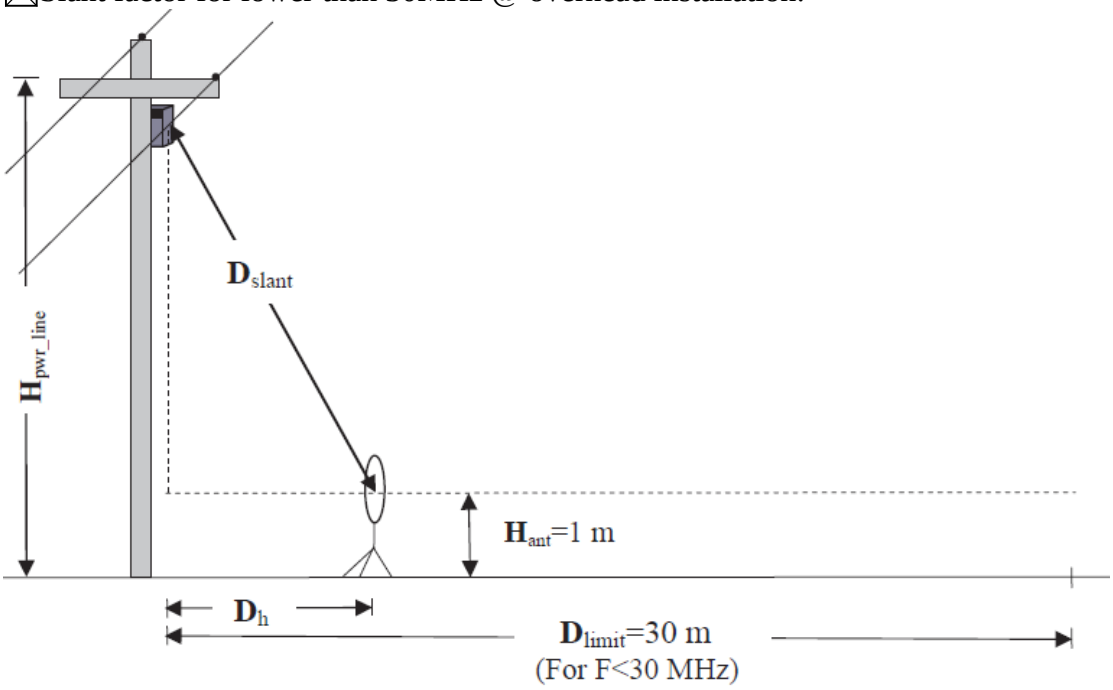

Here H_{ant} = 1m, H_{power_line} = 2m, D_h = 3m;

Therefore Dslant = $(3^2 + (2-1)^2)^{1/2}$ = 3.2m;

Slant factor = 40lg (30 / 3.2) = 38.9dB

☒Measurement distance factor for lower than 30MHz @ underground installation:

Distance factor = 40lg (30 / 3) = 40dB

☒Antenna height factor for higher than 30MHz @ overhead and underground installation (the antenna height is fixed at 1m but not varied from 1m to 4 m): Antenna height factor = -5dB

4.5 Test Protocol

Overhead location 1									
A	B	C	D	E	F	G	H	I	J
Test Point (m)	Ant. Pol.	Freq. (MHz)	Reading (dBuV/m)	Ant. Factor (dB)	Cable loss (dB)	Slant factor / Ant height Factor (dB)	Net (dBuV/m)	Limit (dBuV/m)	Margin (dBuV/m)
0	X	3.026	47.17	19.20	0.08	38.90	27.55	29.50	1.95
0	X	4.866	46.80	19.20	0.11	38.90	27.21	29.50	2.29
0	X	13.65	47.03	19.23	0.19	38.90	27.55	29.50	1.95
10.3	X	17.89	44.88	19.29	0.22	38.90	25.49	29.50	4.01
41.2	X	3.05	46.53	19.20	0.08	38.90	26.91	29.50	2.59
61.8	X	3.75	46.92	19.20	0.09	38.90	27.31	29.50	2.19
82.4	X	17.89	45.26	19.29	0.22	38.90	25.87	29.50	3.63
0	Y	4.762	43.68	19.20	0.11	38.90	24.09	29.50	5.41
20.6	Y	4.25	47.62	19.20	0.10	38.90	28.02	29.50	1.48
20.6	Y	5.174	45.20	19.20	0.11	38.90	25.61	29.50	3.89
30.9	Y	6.898	46.67	19.20	0.13	38.90	27.10	29.50	2.40
30.9	Y	7.326	44.20	19.20	0.13	38.90	24.63	29.50	4.87
41.2	Y	3.054	45.47	19.20	0.08	38.90	25.85	29.50	3.65
41.2	Y	4.662	45.73	19.20	0.10	38.90	26.13	29.50	3.37
82.4	Y	3.882	48.59	19.20	0.09	38.90	28.98	29.50	0.52
82.4	Y	5.542	45.99	19.20	0.12	38.90	26.41	29.50	3.09
0	H	31.80	8.53	19.56	0.30	-5.00	33.39	40.00	6.61
0	H	427.44	14.32	16.20	1.30	-5.00	36.82	46.00	9.18
0	H	647.32	6.36	18.88	1.65	-5.00	31.89	46.00	14.11
20.6	H	438.48	19.66	16.45	1.32	-5.00	42.43	46.00	3.57
30.9	H	63.28	23.46	5.33	0.44	-5.00	34.23	40.00	5.77
30.9	H	120.36	17.75	9.85	0.63	-5.00	33.23	43.50	10.27
41.2	H	122.00	18.68	9.81	0.63	-5.00	34.12	43.50	9.38
0	V	541.36	13.78	18.10	1.48	-5.00	38.36	46.00	7.64
10.3	V	434.80	18.87	16.37	1.31	-5.00	41.55	46.00	4.45
10.3	V	468.72	18.51	17.11	1.37	-5.00	41.99	46.00	4.01
41.2	V	62.08	25.80	5.21	0.43	-5.00	36.44	40.00	3.56
41.2	V	225.60	24.99	9.11	0.90	-5.00	40.00	46.00	6.00
61.8	V	139.52	24.96	9.33	0.68	-5.00	39.97	43.50	3.53

Note 1: H = D + E + F – G; J = I-H
Note 2: the QP detector is applied based on that the pulse-repetition frequency of assessed signal is higher than 20 Hz.

Overhead location 2									
A	B	C	D	E	F	G	H	I	J
Test Point (m)	Ant. Pol.	Freq. (MHz)	Reading (dBuV/m)	Ant. Factor (dB)	Cable loss (dB)	Slant factor / Ant height Factor (dB)	Net (dBuV/m)	Limit (dBuV/m)	Margin (dBuV/m)
0	X	5.47	44.92	19.20	0.11	38.90	25.33	29.50	4.17
10.3	X	4.837	44.11	19.20	0.11	38.90	24.52	29.50	4.98
20.6	X	3.754	46.84	19.20	0.09	38.90	27.23	29.50	2.27
20.6	X	4.514	46.25	19.20	0.10	38.90	26.65	29.50	2.85
20.6	X	5.13	46.64	19.20	0.11	38.90	27.05	29.50	2.45
30.9	X	3.566	46.82	19.20	0.09	38.90	27.21	29.50	2.29
30.9	X	5.198	46.76	19.20	0.11	38.90	27.17	29.50	2.33
0	Y	5.896	43.90	19.20	0.12	38.90	24.32	29.50	5.18
20.6	Y	3.706	46.70	19.20	0.09	38.90	27.09	29.50	2.41
20.6	Y	4.518	45.06	19.20	0.10	38.90	25.46	29.50	4.04
20.6	Y	4.762	46.67	19.20	0.11	38.90	27.08	29.50	2.42
30.9	Y	3.754	46.84	19.20	0.09	38.90	27.23	29.50	2.27
61.8	Y	4.326	46.88	19.20	0.10	38.90	27.28	29.50	2.22
61.8	Y	4.766	46.69	19.20	0.11	38.90	27.10	29.50	2.40
82.4	Y	4.638	46.71	19.20	0.10	38.90	27.11	29.50	2.39
82.4	Y	5.25	43.04	19.20	0.11	38.90	23.45	29.50	6.05
10.3	H	78.90	22.24	7.31	0.49	-5.00	35.04	40.00	4.96
10.3	H	125.60	20.91	9.71	0.64	-5.00	36.26	43.50	7.24
10.3	H	183.70	21.14	8.14	0.79	-5.00	35.07	43.50	8.43
41.2	H	30.69	10.09	20.45	0.29	-5.00	35.83	40.00	4.17
41.2	H	31.30	11.37	19.96	0.30	-5.00	36.63	40.00	3.37
41.2	H	45.23	20.33	9.18	0.37	-5.00	34.88	40.00	5.12
0	V	72.92	24.15	6.43	0.47	-5.00	36.05	40.00	3.95
0	V	128.90	22.17	9.62	0.65	-5.00	37.44	43.50	6.06
0	V	211.20	24.30	8.32	0.86	-5.00	38.48	43.50	5.02
10.3	V	120.50	21.57	9.85	0.63	-5.00	37.05	43.50	6.45
10.3	V	136.47	23.04	9.42	0.67	-5.00	38.13	43.50	5.37
41.2	V	38.94	17.49	14.06	0.33	-5.00	36.88	40.00	3.12
41.2	V	45.63	19.68	8.89	0.37	-5.00	33.94	40.00	6.06
41.2	V	67.70	23.08	5.77	0.45	-5.00	34.30	40.00	5.70

Note 1: H = D + E + F – G; J = I-H
Note 2: the QP detector is applied based on that the pulse-repetition frequency of assessed signal is higher than 20 Hz.

Overhead location 3									
A	B	C	D	E	F	G	H	I	J
Test Point (m)	Ant. Pol.	Freq. (MHz)	Reading (dBuV/m)	Ant. Factor (dB)	Cable loss (dB)	Slant factor / Ant height Factor (dB)	Net (dBuV/m)	Limit (dBuV/m)	Margin (dBuV/m)
0	X	3.032	44.11	19.20	0.08	38.90	24.49	29.50	5.01
10.3	X	2.98	45.54	19.20	0.08	38.90	25.92	29.50	3.58
30.9	X	3.024	45.80	19.20	0.08	38.90	26.18	29.50	3.32
30.9	X	4.856	44.47	19.20	0.11	38.90	24.88	29.50	4.62
30.9	X	5.496	42.40	19.20	0.11	38.90	22.81	29.50	6.69
30.9	X	9.636	46.67	19.20	0.16	38.90	27.13	29.50	2.37
82.4	X	3.014	42.08	19.20	0.08	38.90	22.46	29.50	7.04
0	Y	3.42	45.22	19.20	0.09	38.90	25.61	29.50	3.89
0	Y	4.688	46.83	19.20	0.11	38.90	27.24	29.50	2.26
10.3	Y	3.156	45.47	19.20	0.08	38.90	25.85	29.50	3.65
10.3	Y	4.956	43.86	19.20	0.11	38.90	24.27	29.50	5.23
82.4	Y	3.834	43.97	19.20	0.09	38.90	24.36	29.50	5.14
82.4	Y	5.52	43.78	19.20	0.12	38.90	24.20	29.50	5.30
20.6	H	30.52	11.14	20.58	0.29	-5.00	37.01	40.00	2.99
30.9	H	30.48	12.91	20.62	0.29	-5.00	38.82	40.00	1.18
30.9	H	34.84	12.46	17.49	0.31	-5.00	35.26	40.00	4.74
61.8	H	31.25	8.93	20.00	0.30	-5.00	34.23	40.00	5.77
82.4	H	33.56	12.46	18.46	0.31	-5.00	36.23	40.00	3.77
82.4	H	34.89	11.17	17.44	0.31	-5.00	33.92	40.00	6.08
0	V	30.10	11.80	20.92	0.29	-5.00	38.01	40.00	1.99
0	V	32.26	13.34	19.24	0.30	-5.00	37.88	40.00	2.12
0	V	38.94	11.91	18.44	0.31	-5.00	35.66	40.00	4.34
20.6	V	31.25	10.75	20.00	0.30	-5.00	36.05	40.00	3.95
20.6	V	33.66	13.42	18.40	0.31	-5.00	37.13	40.00	2.87
20.6	V	34.78	13.35	17.54	0.31	-5.00	36.20	40.00	3.80
61.8	V	31.28	12.82	19.98	0.30	-5.00	38.10	40.00	1.90
61.8	V	35.45	14.94	16.97	0.32	-5.00	37.23	40.00	2.77
Note 1: H = D + E + F – G; J = I-H *Note 2: the QP detector is applied based on that the pulse-repetition frequency of assessed signal is higher than 20 Hz.*									

Underground location 1									
A	B	C	D	E	F	G	H	I	J
Test Angle (degree)	Ant. Pol.	Freq. (MHz)	Reading (dBuV/m)	Ant. Factor (dB)	Cable loss (dB)	Ant height / Distance Factor (dB)	Net (dBuV/m)	Limit (dBuV/m)	Margin (dBuV/m)
112.5	X	20.966	42.18	19.59	0.24	40.00	22.01	29.50	7.49
112.5	X	24.450	44.08	20.07	0.26	40.00	24.41	29.50	5.09
135	X	7.430	38.72	19.20	0.13	40.00	18.05	29.50	11.45
135	X	12.95	40.43	19.09	0.18	40.00	19.70	29.50	9.80
247.5	X	6.602	40.91	19.20	0.13	40.00	20.24	29.50	9.26
270	X	4.938	41.07	19.20	0.11	40.00	20.38	29.50	9.12
270	X	6.602	41.48	19.20	0.13	40.00	20.81	29.50	8.69
270	X	7.430	41.56	19.20	0.13	40.00	20.89	29.50	8.61
292.5	X	6.606	42.67	19.20	0.13	40.00	22.00	29.50	7.50
135	Y	17.562	43.72	19.26	0.21	40.00	23.19	29.50	6.31
180	Y	3.490	45.25	19.20	0.09	40.00	24.54	29.50	4.96
180	Y	4.978	46.00	19.20	0.11	40.00	25.31	29.50	4.19
180	Y	7.414	44.91	19.20	0.13	40.00	24.24	29.50	5.26
202.5	Y	3.398	45.22	19.20	0.09	40.00	24.51	29.50	4.99
202.5	Y	4.202	46.90	19.20	0.10	40.00	26.20	29.50	3.30
247.5	Y	3.834	46.18	19.20	0.09	40.00	25.47	29.50	4.03
247.5	Y	4.762	45.85	19.20	0.11	40.00	25.16	29.50	4.34
270	Y	3.562	45.10	19.20	0.09	40.00	24.39	29.50	5.11
270	Y	4.082	46.02	19.20	0.10	40.00	25.32	29.50	4.18
0	H	342.32	20.24	14.22	1.13	-5.00	40.59	46.00	5.41
0	H	483.36	12.03	17.43	1.39	-5.00	35.85	46.00	10.15
67.5	H	452.24	15.48	16.75	1.34	-5.00	38.57	46.00	7.43
90	H	32.68	11.31	18.99	0.30	-5.00	35.60	40.00	4.40
90	H	57.13	23.51	5.20	0.42	-5.00	34.13	40.00	5.87
157.5	H	30.30	10.60	20.76	0.29	-5.00	36.65	40.00	3.35
157.5	H	33.01	11.56	18.79	0.31	-5.00	35.66	40.00	4.34
22.5	V	31.06	12.43	20.15	0.30	-5.00	37.88	40.00	2.12
22.5	V	38.69	16.43	14.31	0.33	-5.00	36.07	40.00	3.93
45	V	33.28	13.65	18.63	0.31	-5.00	37.59	40.00	2.41
45	V	34.69	15.09	17.61	0.31	-5.00	38.01	40.00	1.99
90	V	36.44	16.82	16.17	0.32	-5.00	38.31	40.00	1.69
90	V	38.72	16.47	14.28	0.33	-5.00	36.08	40.00	3.92

Note 1: H = D + E + F – G; J = I-H
Note 2: the QP detector is applied based on that the pulse-repetition frequency of assessed signal is higher than 20 Hz.

Underground location 2									
A	B	C	D	E	F	G	H	I	J
Test Angle (degree)	Ant. Pol.	Freq. (MHz)	Reading (dBuV/m)	Ant. Factor (dB)	Cable loss (dB)	Ant height / Distance Factor (dB)	Net (dBuV/m)	Limit (dBuV/m)	Margin (dBuV/m)
90	X	3.882	37.99	19.20	0.09	40.00	17.28	29.50	12.22
90	X	4.398	38.43	19.20	0.10	40.00	17.73	29.50	11.77
90	X	5.154	38.62	19.20	0.11	40.00	17.93	29.50	11.57
180	X	2.466	45.95	19.20	0.07	40.00	25.22	29.50	4.28
180	X	2.926	42.63	19.20	0.08	40.00	21.91	29.50	7.59
180	X	3.686	40.28	19.20	0.09	40.00	19.57	29.50	9.93
180	X	4.518	40.72	19.20	0.10	40.00	20.02	29.50	9.48
45	Y	4.446	46.38	19.20	0.10	40.00	25.68	29.50	3.82
45	Y	5.246	45.53	19.20	0.11	40.00	24.84	29.50	4.66
45	Y	5.59	45.10	19.20	0.12	40.00	24.42	29.50	5.08
90	Y	5.078	49.75	19.20	0.11	40.00	29.06	29.50	0.44
135	Y	4.49	47.33	19.20	0.10	40.00	26.63	29.50	2.87
135	Y	5.422	47.64	19.20	0.11	40.00	26.95	29.50	2.55
180	Y	4.858	47.42	19.20	0.11	40.00	26.73	29.50	2.77
180	Y	5.25	46.82	19.20	0.11	40.00	26.13	29.50	3.37
270	Y	3.274	48.13	19.20	0.08	40.00	27.41	29.50	2.09
270	Y	4.886	47.14	19.20	0.11	40.00	26.45	29.50	3.05
270	Y	5.298	47.80	19.20	0.11	40.00	27.11	29.50	2.39
0	H	112.00	23.52	10.08	0.60	-5.00	39.20	43.50	4.30
90	H	168.24	20.65	8.56	0.75	-5.00	34.96	43.50	8.54
180	H	33.87	13.46	18.28	0.31	-5.00	37.05	40.00	2.95
180	H	38.63	16.65	14.37	0.33	-5.00	36.35	40.00	3.65
225	H	30.12	11.67	20.90	0.29	-5.00	37.86	40.00	2.14
225	H	35.50	16.05	16.93	0.32	-5.00	38.30	40.00	1.70
270	H	38.97	16.77	14.03	0.33	-5.00	36.13	40.00	3.87
270	H	121.88	23.99	9.81	0.63	-5.00	39.43	43.50	4.07
0	V	30.10	10.05	20.92	0.29	-5.00	36.26	40.00	3.74
0	V	35.62	15.74	16.82	0.32	-5.00	37.88	40.00	2.12
45	V	34.67	13.14	17.63	0.31	-5.00	36.08	40.00	3.92
45	V	36.74	16.54	15.95	0.32	-5.00	37.81	40.00	2.19
135	V	31.24	13.32	20.01	0.30	-5.00	38.63	40.00	1.37
135	V	38.16	17.45	14.84	0.33	-5.00	37.62	40.00	2.38
135	V	417.64	18.77	15.99	1.28	-5.00	41.04	43.50	2.46
180	V	292.04	22.46	12.76	1.03	-5.00	41.25	46.00	4.75
315	V	30.68	12.67	20.46	0.29	-5.00	38.42	40.00	1.58

Note 1: H = D + E + F – G; J = I-H
Note 2: the QP detector is applied based on that the pulse-repetition frequency of assessed signal is higher than 20 Hz.

Underground location 3									
A	B	C	D	E	F	G	H	I	J
Test Angle (degree)	Ant. Pol.	Freq. (MHz)	Reading (dBuV/m)	Ant. Factor (dB)	Cable loss (dB)	Ant height / Distance Factor (dB)	Net (dBuV/m)	Limit (dBuV/m)	Margin (dBuV/m)
180	X	3.314	38.09	19.20	0.08	40.00	17.37	29.50	12.13
180	X	4.318	36.05	19.20	0.10	40.00	15.35	29.50	14.15
180	X	4.93	35.89	19.20	0.11	40.00	15.20	29.50	14.30
225	X	3.046	38.17	19.20	0.08	40.00	17.45	29.50	12.05
225	X	3.222	41.64	19.20	0.08	40.00	20.92	29.50	8.58
225	X	3.93	38.53	19.20	0.09	40.00	17.82	29.50	11.68
225	X	9.502	41.87	19.20	0.16	40.00	21.23	29.50	8.27
270	X	2.686	41.79	19.20	0.08	40.00	21.07	29.50	8.43
270	X	3.51	38.10	19.20	0.09	40.00	17.39	29.50	12.11
0	Y	3.002	46.44	19.20	0.08	40.00	25.72	29.50	3.78
0	Y	4.81	47.10	19.20	0.11	40.00	26.41	29.50	3.09
45	Y	3.058	46.68	19.20	0.08	40.00	25.96	29.50	3.54
45	Y	3.854	48.05	19.20	0.09	40.00	27.34	29.50	2.16
45	Y	4.694	47.02	19.20	0.11	40.00	26.33	29.50	3.17
90	Y	3.71	46.73	19.20	0.09	40.00	26.02	29.50	3.48
135	Y	3.878	47.06	19.20	0.09	40.00	26.35	29.50	3.15
135	Y	4.518	47.06	19.20	0.10	40.00	26.36	29.50	3.14
180	Y	3.346	47.60	19.20	0.09	40.00	26.89	29.50	2.61
180	Y	3.786	47.14	19.20	0.09	40.00	26.43	29.50	3.07
180	Y	4.814	47.58	19.20	0.11	40.00	26.89	29.50	2.61
225	Y	4.902	47.13	19.20	0.11	40.00	26.44	29.50	3.06
225	Y	5.542	47.15	19.20	0.12	40.00	26.47	29.50	3.03
270	Y	3.458	47.08	19.20	0.09	40.00	26.37	29.50	3.13
270	Y	4.27	47.29	19.20	0.10	40.00	26.59	29.50	2.91
90	H	30.84	10.07	20.33	0.29	-5.00	35.69	40.00	4.31
90	H	34.00	12.54	18.20	0.31	-5.00	36.05	40.00	3.95
180	H	33.81	13.59	18.31	0.31	-5.00	37.21	40.00	2.79
180	H	38.92	16.87	14.08	0.33	-5.00	36.28	40.00	3.72
270	H	342.28	21.74	14.21	1.13	-5.00	42.08	46.00	3.92
315	H	204.68	27.24	7.96	0.84	-5.00	41.04	46.00	4.96
135	V	33.60	14.95	18.44	0.31	-5.00	38.70	40.00	1.30
135	V	46.76	24.19	8.07	0.37	-5.00	37.63	40.00	2.37
180	V	37.74	17.85	15.20	0.33	-5.00	38.38	40.00	1.62
180	V	80.01	23.06	7.47	0.50	-5.00	36.03	40.00	3.97
225	V	129.03	19.81	9.62	0.65	-5.00	35.08	46.00	10.92
225	V	143.40	22.21	9.23	0.69	-5.00	37.13	46.00	8.87
270	V	32.59	13.70	19.05	0.30	-5.00	38.05	40.00	1.95
315	V	35.88	16.71	16.60	0.32	-5.00	38.63	40.00	1.37
315	V	38.27	18.37	14.73	0.33	-5.00	38.43	40.00	1.57

Note 1: H = D + E + F – G; J = I-H
Note 2: the QP detector is applied based on that the pulse-repetition frequency of assessed signal is higher than 20 Hz.
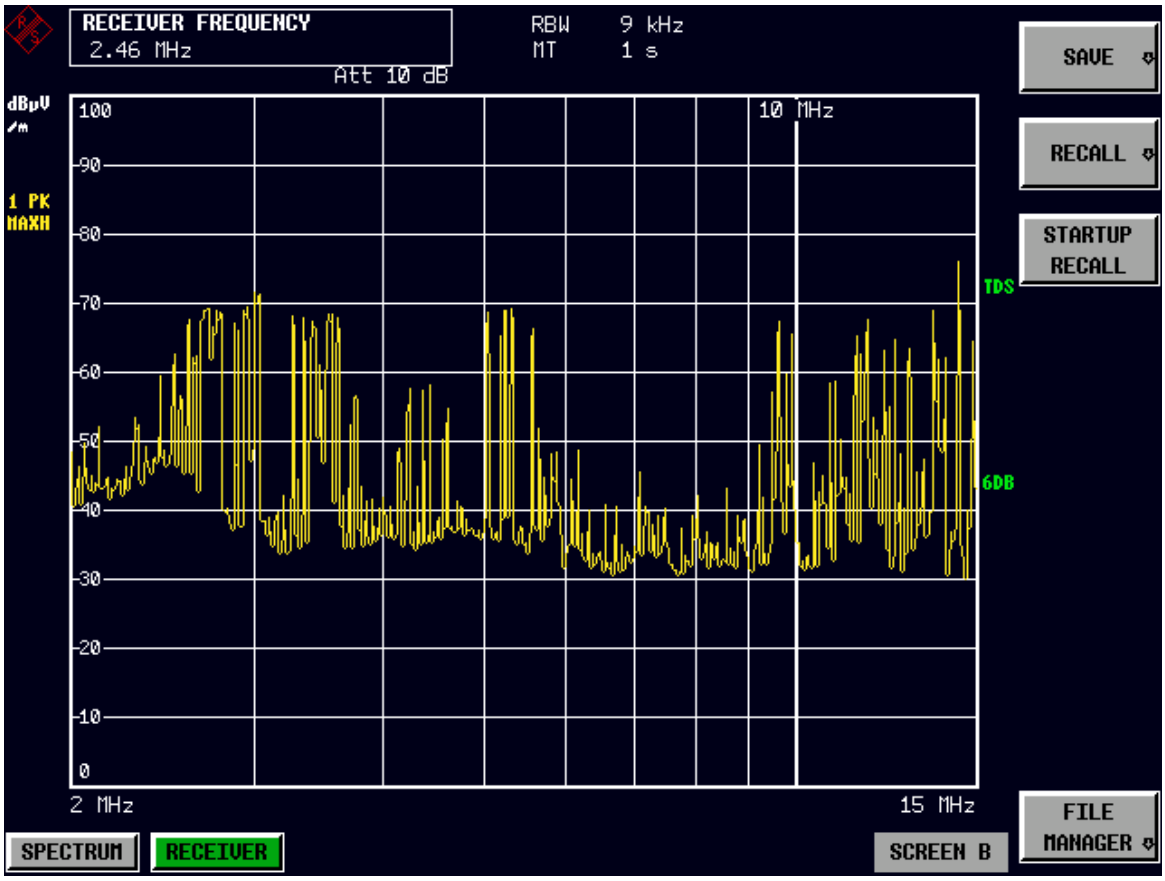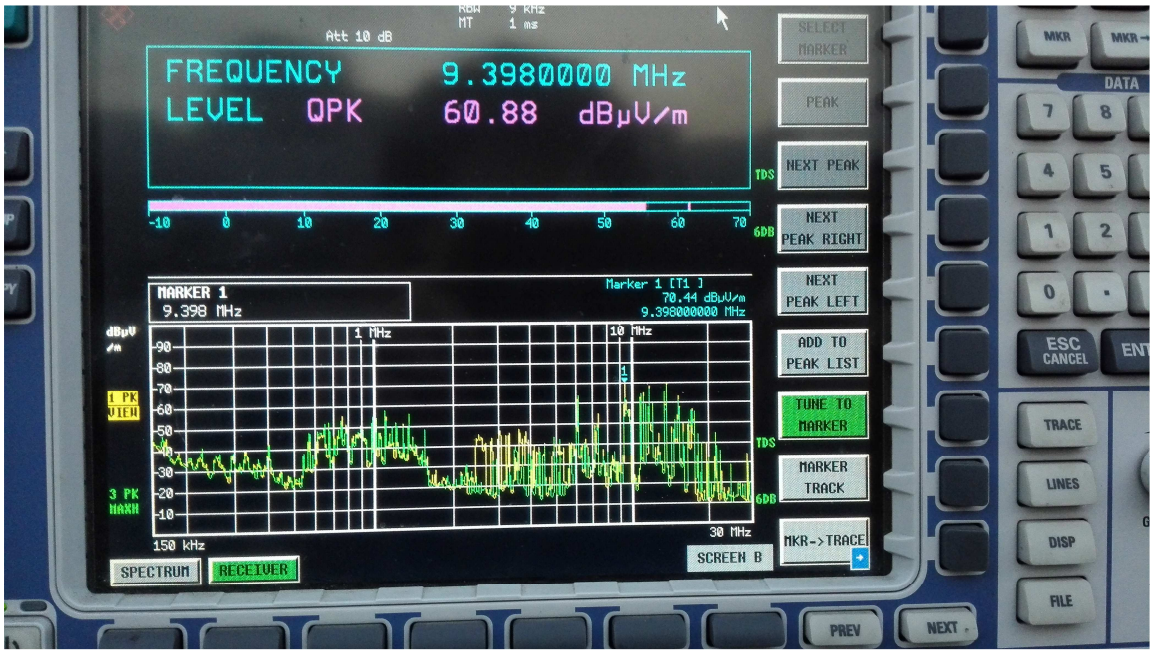
Representative emissions spectrum Plot