FCC SAR Compliance Test Report

Product Name: LTE USB Rotator

Model : E3276s-503

FCC ID : QISE3276S-503

Report No. : SYBH(Z-SAR)032072013-2

	APPROVED (Lab Manager)	PREPARED (Test Engineer)
BY	Alvinway	Li wei
DATE	2013-08-27	2013-08-27

The test results of this test report relate exclusively to the item(s) tested , The HUAWEI does not assume responsibility for any conclusions and generalisations drawn from the test results with regard to other specimens or samples of the type of the equipment represented by the test item. The test report may only be reproduced or published in full. Reproduction or publication of extracts from the report requires the prior written approval of HUAWEI.

Reliability Laboratory of Huawei Technologies Co., Ltd.

Administration Building, Headquarters of Huawei Technologies Co., Ltd., Bantian, Longgang District, Shenzhen, 518129, P.R.C

Tel: +86 755 28780808 Fax: +86 755 89652518

Table of Contents

1 General Information 5
1.1 Statement of Compliance 5
1.2 RF exposure limits 5
1.3 EUT Description 6
1.3.1 General Description 7
The followed table is show the different between the 2 Models. 8
1.4 Test specification(s) 9
1.5 Testing laboratory 9
1.6 Applicant and Manufacturer 9
1.7 Application details 9
1.8 Ambient Condition 9
2 SAR Measurement System 10
2.1 SAR Measurement Set-up 10
2.2 Test environment 11
2.3 Data Acquisition Electronics description 11
2.4 Probe description 12
2.5 Phantom description 13
2.6 Device holder description 13
2.7 Test Equipment List 14
3 SAR Measurement Procedure 15
3.1 Scanning procedure 15
3.2 Spatial Peak SAR Evaluation 16
3.3 Data Storage and Evaluation 17
4 System Verification Procedure 19
4.1 Tissue Verification 19
4.2 System Check 20
4.3 System check Procedure 21
5 Measurement Uncertainty Evaluation 22
5.1 Measurement uncertainty evaluation for SAR test 22
5.2 Measurement uncertainty evaluation for system check 23
6 SAR Test Configuration 24
6.1 GSM Test Configuration 24
6.2 UMTS Test Configuration 25
6.3 LTE Test Configuration 30
7 SAR Measurement Results 32
7.1 Conducted power measurements 32
7.1.1 Conducted power measurements GSM850 33
7.1.2 Conducted power measurements GSM1900 33
7.1.3 Conducted power measurements UMTS Band V 34
7.1.4 Conducted power measurements UMTS Band IV 35
7.1.5 Conducted power measurements UMTS Band II 36
7.1.6 Conducted power measurements LTE Band II 37
7.1.7 Conducted power measurements LTE Band IV 39
7.1.8 Conducted power measurements LTE Band V 41
7.1.9 Conducted power measurements LTE Band XIII 42
7.2 SAR measurement Result 43
7.2.1 SAR measurement Result of GSM850 44
7.2.2 SAR measurement Result of GSM1900 45
7.2.3 SAR measurement Result of UMTS Band V 46
7.2.4 SAR measurement Result of UMTS Band IV 47
7.2.5 SAR measurement Result of UMTS Band II 48
7.2.6 SAR measurement Result of LTE Band II 49
7.2.7 SAR measurement Result of LTE Band IV 50
7.2.8 SAR measurement Result of LTE Band V 51
7.2.9 SAR measurement Result of LTE Band XIII 52
7.3 simultaneous transmission SAR 53
Appendix A. System Check Plots 54
Appendix B. SAR Measurement Plots 54

Appendix C. Calibration Certificate 54
Appendix D. Photo documentation 54

※ ※ Modified History ※ ※

REV.	DESCRIPTION	ISSUED DATE	REMARK
Rev.1.0	Initial Test Report Release	2013-08-15	Li Wei

1 General Information

1.1 Statement of Compliance

The maximum results of Specific Absorption Rate (SAR) found during testing for E3276s-503 are as below Table 1.

Band	Position	MAX Reported 1-g SAR (W/kg)
GSM850	Body 5mm	1.076
GSM1900	Body 5mm	0.977
UMTS Band V	Body 5mm	1.092
UMTS Band IV	Body 5mm	1.199
UMTS Band II	Body 5mm	**1.390**
LTE Band II	Body 5mm	1.350
LTE Band IV	Body 5mm	1.382
LTE Band V	Body 5mm	1.345
LTE Band XIII	Body 5mm	1.118

Table 1:Summary of test result

The device is in compliance with Specific Absorption Rate（SAR）for general population/uncontraolled exposure limits of 1.6 W/Kg as averaged over any 1 g tissue according to the FCC rule §2.1093, the ANSI/IEEE C95.1:1992, the NCRP Report Number 86 for uncontrolled environment, according to the Industry Canada Radio Standards Specification RSS-102 for General Population/Uncontrolled exposure, and had been tested in accordance with the measurement methods and procedures specified in IEEE Std 1528-2003 & IEEE Std 1528a-2005.

1.2 RF exposure limits

Human Exposure	Uncontrolled Environment General Population	Controlled Environment Occupational
Spatial Peak SAR* (Brain/Body/Arms/Legs)	**1.60 mW/g**	8.00 mW/g
Spatial Average SAR** (Whole Body)	0.08 mW/g	0.40 mW/g
Spatial Peak SAR*** (Hands/Feet/Ankle/Wrist)	4.00 mW/g	20.00 mW/g

Table 2: RF exposure limits

The limit applied in this test report is shown in **bold** letters

Notes:

* The Spatial Peak value of the SAR averaged over any 1 gram of tissue (defined as a tissue volume in the shape of a cube) and over the appropriate averaging time

** The Spatial Average value of the SAR averaged over the whole body.

*** The Spatial Peak value of the SAR averaged over any 10 grams of tissue (defined as a tissue volume in the shape of a cube) and over the appropriate averaging time.

Uncontrolled Environments are defined as locations where there is the exposure of individuals who have no knowledge or control of their exposure.

Controlled Environments are defined as locations where there is exposure that may be incurred by persons who are aware of the potential for exposure, (i.e. as a result of employment or occupation.

1.3 EUT Description

Device Information:			
DUT Name:	LTE USB Rotator		
Type Identification:	E3276s-503		
FCC ID:	QISE3276S-503		
SN No.:	P7Z01A9371800040		
Device Type :	portable device		
Exposure Category:	uncontrolled environment / general population		
Hardware Version :	CH5E3276SM		
Software Version :	21.436.07.00.00		
Antenna Type :	internal antenna		
Device Operating Configurations:			
Supporting Mode(s)	GSM850/1900,UMTS Band V / IV / II, LTE Band II / IV / V / XIII (tested)		
Test Modulation	GSM(GMSK), UMTS(QPSK),LTE(QPSK,16QAM)		
Device Class	B		
Operating Frequency Range(s)	Band	Tx (MHz)	Rx (MHz)
	GSM850	824-849	869-894
	GSM1900	1850-1910	1930-1990
	UMTS Band V	824-849	869-894
	UMTS Band IV	1710-1755	2110-2155
	UMTS Band II	1850-1910	1930-1990
	LTE Band II	1850-1910	1930-1990
	LTE Band IV	1710-1755	2110-2155
	LTE Band V	824-849	869-894
	LTE Band XIII	777-787	746-756
GPRS Multislot Class(12)	Max Number of Timeslots in Uplink:	4	
	Max Number of Timeslots in Downlink:	4	
	Max Total Timeslot:	5	
EGPRS Multislot Class(12)	Max Number of Timeslots in Uplink:	4	
	Max Number of Timeslots in Downlink:	4	
	Max Total Timeslot:	5	
HSDPA UE Category	14		
HSUPA UE category	6		
DC-HSDPA UE Category	24		
Power Class:	4, tested with power level 5(GSM850)		
	1, tested with power level 0(GSM1900)		
	3, tested with power control “all 1”(UMTS Band V)		
	3, tested with power control “all 1”(UMTS Band IV)		
	3, tested with power control “all 1”(UMTS Band II)		
	3, tested with power control all Max.(LTE Band II)		
	3, tested with power control all Max.(LTE Band IV)		
	3, tested with power control all Max.(LTE Band V)		
	3, tested with power control all Max.(LTE Band XIII)		

Test Channels (low-mid-high):	128-190-251 (GSM850)
	512-661-810 (GSM1900)
	4132-4182-4233(UMTS Band V)
	1312-1413-1513(UMTS Band IV)
	9262-9400-9538(UMTS Band II)
	18625-18900-19175(LTE Band II,BW=5MHz) 18650-18900-19150(LTE Band II,BW=10MHz) 18675-18900-19125(LTE Band II,BW=15MHz) 18700-18900-19100(LTE Band II,BW=20MHz)
	19975-20175-20375(LTE Band IV,BW=5MHz) 20000-20175-20350(LTE Band IV,BW=10MHz) 20025-20175-20325(LTE Band IV,BW=15MHz) 20050-20175-20300(LTE Band IV,BW=20MHz)
	20425-20525-20625(LTE Band V,BW=5MHz) 20450-20525-20600(LTE Band V,BW=10MHz)
	23205-23230-23255(LTE Band XIII,BW=5MHz) 23230-23230-23230(LTE Band XIII,BW=10MHz)

Table 3:Device information and operating configuration

1.3.1 General Description

E3276s-503 USB Rotator is subscriber equipment in the LTE/DC-HSPA+/HSUPA/HSDPA/WCDMA/EDGE/GPRS/GSM system.LTE supports Band I、II、IV、V、XIII, but Band II、IV、V、XIII testing dates included in this reports, DC-HSPA+/HSUPA/HSDPA /WCDMA supports Band I、II、IV、V, but only Band II、IV、V test dates included in this report, EDGE/GPRS/GSM Supports GSM 850、900、1800、1900,but only GSM 850 and 1900 test date included in this report.E3276s-503 implement such functions as RF signal receiving/transmitting, LTE/HSPA+/WCDMA and EDGE/GPRS/GSM protocol processing, data service etc. Externally it provides USB interface (to connect to the notebook etc.), USIM card interface and Micro SD card interface. E3276s-503 has an internal antenna as default.

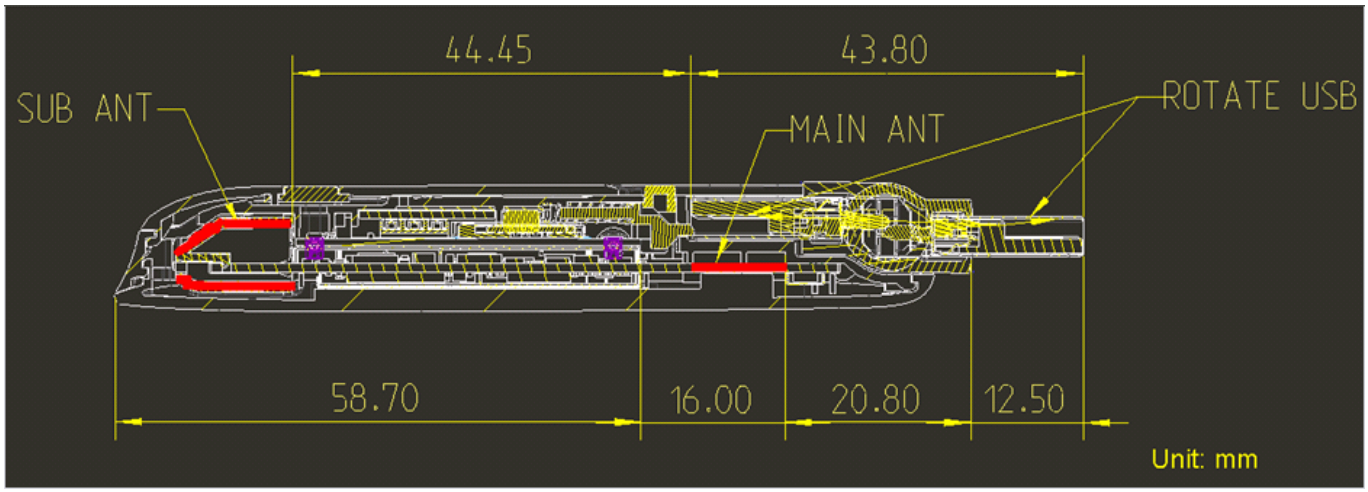

The difference of E3276s-505 and E3276s-503：

1. E3276s-505 is a LTE/DC-HSPA+/UMTS/EDGE/GPRS/GSM USB Rotator. The GSM supports four bands. The WCDMA supports WCDMA2100、WCDMA1900、 WCDMA 850、WCDMA AWS. LTE supports B1、B4、B2、B5、B12 and B17.

2. E3276s-503 is the USB Rotator which changes some components from E3276s-505.
The PCB of E3276s-505 and E3276s-503 is the same.
The differences between E3276s-503 and E3276s-505 are: E3276s-503 removes the LTE B12、B17 components and add the LTE B13 components.

The followed table is show the different between the 2 Models.

	E3276s-505	E3276s-503
GSM four band	support	support
WCDMA 2100M	support	support
WCDMA 1900M	support	support
WCDMA AWS	support	support
WCDMA 850M	support	support
LTE B1	support	support
LTE B2	support	support
LTE B4	support	support
LTE B5	support	support
LTE B12	support	NO
LTE B13	NO	support
LTE B17	support	NO
FLASH	Support 256M	Support 256M
PCB	the same	the same
Appearance	Common Appearance	Common Appearance

1.4 Test specification(s)

ANSI C95.1-1992	Safety Levels with Respect to Human Exposure to Radio Frequency Electromagnetic Fields, 3 kHz – 300 GHz.(IEEE Std C95.1-1991)
IEEE Std 1528-2003	Recommended Practice for Determining the Peak Spatial-Average Specific Absorption Rate (SAR) in the Human Head from Wireless Communications Devices: Measurement Techniques
IEEE Std 1528a-2005	IEEE Recommended Practice for Determining the Peak Spatial-Average Specific Absorption Rate (SAR) in the Human Head from Wireless Communications Devices: Measurement Techniques Amendment 1: CAD File for Human Head Model (SAM Phantom)
RSS-102	Radio Frequency Exposure Compliance of Radiocommunication Apparatus (All Frequency Bands (Issue 4 of March 2010)
KDB941225 D01	SAR test for 3G devices v02
KDB941225 D02	HSPA and 1x Advanced v02r02
KDB941225 D03	SAR Test Reduction GSM GPRS EDGE vo1
KDB941225 D05	SAR for LTE Devices v02r02
KDB447498 D02	SAR Procedures for Dongle Xmtr v02
KDB447498 D01	General RF Exposure Guidance v05r01
KDB865664 D01	SAR measurement 100 MHz to 6 GHz v01r01
KDB865664 D02	SAR Reporting v01r01

1.5 Testing laboratory

Test Site	The Reliability Laboratory of Huawei Technologies Co., Ltd.
Test Location	Zone K3,Huawei Industrial Base, Bantian Industry Area, Longgang District, Shenzhen, Guangdong, China
Telephone	+86 755 28780808
Fax	+86 755 89652518
State of accreditation	The Test laboratory (area of testing) is accredited according to ISO/IEC 17025. CNAS Registration number: L0310 A2LA TESTING CERT #2174.01

1.6 Applicant and Manufacturer

Company Name	HUAWEI TECHNOLOGIES CO., LTD
Address	Administration Building, Headquarters of Huawei Technologies Co., Ltd., Bantian, Longgang District, Shenzhen, 518129, P.R.C

1.7 Application details

Start Date of test	2013/08/03
End Date of test	2013/08/12

1.8 Ambient Condition

Ambient temperature	20°C – 24°C
Relative Humidity	30% – 70%

2 SAR Measurement System

2.1 SAR Measurement Set-up

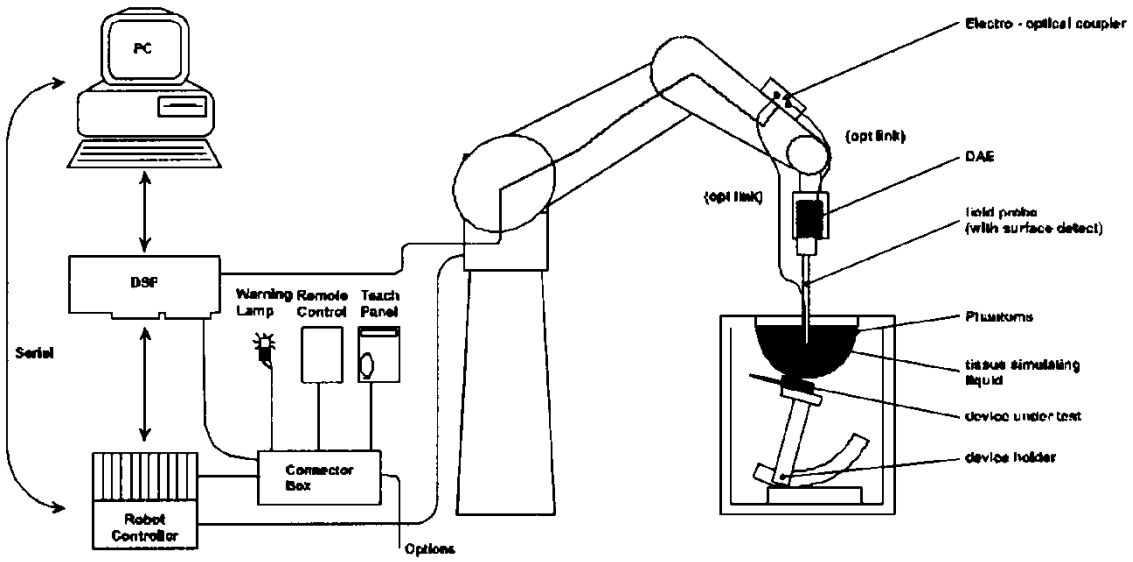

The DASY5 system for performing compliance tests consists of the following items:

- A standard high precision 6-axis robot (Stäubli RX family) with controller and software. An arm extension for accommodating the data acquisition electronics (DAE).

- A dosimetric probe, i.e. an isotropic E-field probe optimized and calibrated for usage in tissue simulating liquid. The probe is equipped with an optical surface detector system.

- A data acquisition electronic (DAE) which performs the signal amplification, signal multiplexing, AD-conversion, offset measurements, mechanical surface detection, collision detection, etc. The unit is battery powered with standard or rechargeable batteries. The signal is optically transmitted to the EOC.
- A unit to operate the optical surface detector which is connected to the EOC.
- The Electro-Optical Coupler (EOC) performs the conversion from the optical into a digital electric signal of the DAE. The EOC is connected to the DASY5 measurement server.
- The DASY5 measurement server, which performs all real-time data evaluation for field measurements and surface detection, controls robot movements and handles safety operation. A computer operating Windows XP.
- DASY5 software and SEMCAD data evaluation software.
- Remote control with teach panel and additional circuitry for robot safety such as warning lamps, etc.
- The generic twin phantom enabling the testing of left-hand and right-hand usage.
- The device holder for handheld mobile phones.
- Tissue simulating liquid mixed according to the given recipes.
- System check dipoles allowing to validate the proper functioning of the system.

2.2 Test environment

The DASY4 measurement system is placed at the head end of a room with dimensions:
5 x 2.5 x 3 m³, the SAM phantom is placed in a distance of 75 cm from the side walls and 1.1m from the rear wall. Above the test system a 1.5 x 1.5 m² array of pyramid absorbers is installed to reduce reflections from the ceiling.
Picture 1 of the photo documentation shows a complete view of the test environment.
The system allows the measurement of SAR values larger than 0.005 mW/g.

2.3 Data Acquisition Electronics description

The data acquisition electronics (DAE) consist of a highly sensitive electrometer-grade preamplifier with auto-zeroing, a channel and gain-switching multiplexer, a fast 16 bit AD-converte and a command decoder with a control logic unit. Transmission to the measurement server is accomplished through an optical downlink for data and status information, as well as an optical uplink for commands and the clock.

The mechanical probe mounting device includes two different sensor systems for frontal and sideways probe contacts. They are used for mechanical surface detection and probe collision detection.

DAE4

Input Impedance	200MOhm	
The Inputs	symmetrical and floating	
Common mode rejection	above 80 dB	

2.4 Probe description

These probes are specially designed and calibrated for use in liquids with high permittivities. They should not be used in air, since the spherical isotropy in air is poor (±2 dB). The dosimetric probes have special calibrations in various liquids at different frequencies.

Isotropic E-Field Probe ES3DV3 for Dosimetric Measurements

Construction	Symmetrical design with triangular core Interleaved sensors Built-in shielding against static charges PEEK enclosure material (resistant to organic solvents, e.g., DGBE)	
Calibration	ISO/IEC 17025 calibration service available.	
Frequency	10 MHz to 4 GHz; Linearity: ± 0.2 dB (30 MHz to 4 GHz)	
Directivity	± 0.2 dB in HSL (rotation around probe axis) ± 0.3 dB in tissue material (rotation normal to probe axis)	
Dynamic range	5 µW/g to > 100 mW/g; Linearity: ± 0.2 dB	
Dimensions	Overall length: 337 mm (Tip: 20 mm) Tip diameter: 3.9 mm (Body: 12 mm) Distance from probe tip to dipole centers: 2.0 mm	
Application	General dosimetry up to 4 GHz Dosimetry in strong gradient fields Compliance tests of mobile phones	

Isotropic E-Field Probe EX3DV4 for Dosimetric Measurements

Construction	Symmetrical design with triangular core Built-in shielding against static charges PEEK enclosure material (resistant to organic solvents, e.g., DGBE)	
Calibration	ISO/IEC 17025 calibration service available.	
Frequency	10 MHz to >6 GHz; Linearity: ± 0.2 dB (30 MHz to 6 GHz)	
Directivity	± 0.3 dB in HSL (rotation around probe axis) ± 0.5 dB in tissue material (rotation normal to probe axis)	
Dynamic range	10 µW/g to > 100 mW/g; Linearity: ± 0.2 dB(noise:typically<1µW/g)	
Dimensions	Overall length: 337 mm (Tip:20 mm) Tip diameter:2.5 mm (Body:12 mm) Typical distance from probe tip to dipole centers: 1mm	
Application	High precision dosimetric measurements in any exposure scenario(e.g.,very strong gradient fields). Only probe which enables compliance testing for frequencies up to 6 GHz with precision of better 30%	

2.5 Phantom description

SAM Twin Phantom

Shell Thickness	2mm +/- 0.2 mm; The ear region: 6mm	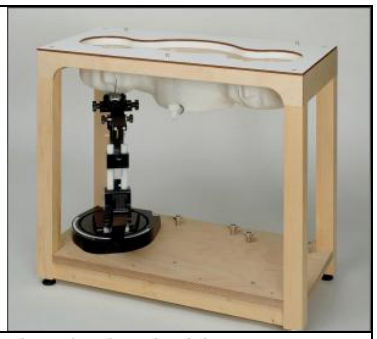
Filling Volume	Approximately 30 liters	
Dimensions	Length:1000mm; Width:500mm; Height: adjustable feet	
Measurement Areas	Left hand Right hand Flat phantom	
The bottom plate contains three pairs of bolts for locking the device holder. The device holder positions are adjusted to the standard measurement positions in the three sections. A white cover is provided to cover the phantom during off-periods to prevent water evaporation and changes in the liquid parameters. Free space scans of devices on top of this phantom cover are possible. Three reference marks are provided on the phantom counter. These reference marks are used to teach the absolute phantom position relative to the robot.		

ELI4 Phantom

Shell Thickness	2mm +/- 0.2 mm	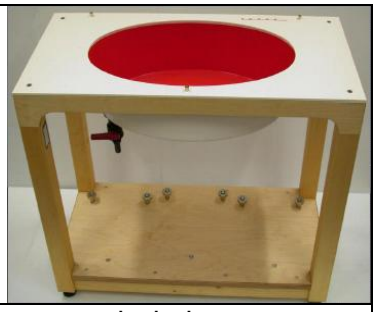
Filling Volume	Approximately 30 liters	
Dimensions	Length:1000mm; Width:500mm; Height: adjustable feet	
Measurement Areas	Flat phantom	
The ELI4 phantom is intended for compliance testing of handheld and body-mounted wireless devices in the frequency range of 30MHz to 6GHz. ELI4 is fully compatible with the latest draft of the standard IEC 62209-2 and all known tissue simulating liquids.		

2.6 Device holder description

The DASY5 device holder has two scales for device rotation (with respect to the body axis) and the device inclination (with respect to the line between the ear openings). The plane between the ear openings and the mouth tip has a rotation angle of 65°. The bottom plate contains three pair of bolts for locking the device holder. The device holder positions are adjusted to the standard measurement positions in the three sections. This device holder is used for standard mobile phones or PDA's only. If necessary an additional support of polystyrene material is used.

Larger DUT's (e.g. notebooks) cannot be tested using this device holder. Instead a support of bigger polystyrene cubes and thin polystyrene plates is used to position the DUT in all relevant positions to find and measure spots with maximum SAR values.
Therefore those devices are normally only tested at the flat part of the SAM.

2.7 Test Equipment List

This table gives a complete overview of the SAR measurement equipment
Devices used during the test described are marked ☒

	Manufacturer	Device	Type	Serial number	Date of last calibration)*	Valid period
☒	SPEAG	Dosimetric E-Field Probe	EX3DV4	3898	2013-01-14	One year
☐	SPEAG	Dosimetric E-Field Probe	EX3DV4	3736	2013-05-10	One year
☒	SPEAG	750 MHz Dipole	D750V3	1044	2011-09-16	Three years
☒	SPEAG	835 MHz Dipole	D835V2	4d059	2013-05-02	Three years
☒	SPEAG	1800 MHz Dipole	D1800V2	2d184	2011-03-08	Three years
☒	SPEAG	1900 MHz Dipole	D1900V2	5d143	2011-09-26	Three years
☐	SPEAG	2000 MHz Dipole	D2000V2	1052	2011-03-10	Three years
☐	SPEAG	2300 MHz Dipole	D2300V2	1016	2011-11-22	Three years
☐	SPEAG	2450 MHz Dipole	D2450V2	860	2011-03-08	Three years
☐	SPEAG	2600 MHz Dipole	D2600V2	1021	2011-11-22	Three years
☐	SPEAG	Data acquisition electronics	DAE4	852	2012-11-22	One year
☒	SPEAG	Data acquisition electronics	DAE4	1236	2012-11-23	One year
☒	SPEAG	Software	DASY 5	N/A	N/A	N/A
☐	SPEAG	Twin Phantom	SAM1	TP-1475	N/A	N/A
☐	SPEAG	Twin Phantom	SAM2	TP-1474	N/A	N/A
☒	SPEAG	Twin Phantom	SAM3	TP-1597	N/A	N/A
☒	SPEAG	Twin Phantom	SAM4	TP-1620	N/A	N/A
☐	SPEAG	Flat Phantom	ELI 4.0	TP-1038	N/A	N/A
☐	SPEAG	Flat Phantom	ELI 4.0	TP-1111	N/A	N/A
☒	R & S	Universal Radio Communication Tester	CMU 200	113989	2013-06-08	One year
☒	R & S	WideBand Radio Communication Tester	CMW 500	112936	2012-08-24	One year
☒	Agilent)*	Network Analyser	E5071B	MY42404956	2013-02-27	One year
☒	Agilent	Dielectric Probe Kit	85070E	2484	N/A	N/A
☒	Agilent	Signal Generator	N5181A	MY47420989	2013-02-27	One year
☒	MINI-CIRCUITS	Amplifier	ZHL-42W	QA0746001	N/A	N/A
☒	Agilent	Power Meter	E4417A	MY45101339	2013-02-26	One year
☒	Agilent	Power Meter Sensor	E9321A	MY44420359	2013-02-26	One year

Note: All the test equipments are calibrated once a year, except the dipoles, which are calibrated every three years. Moreover, we have self-calibration every year to the dipoles.

1) Per KDB865664 requirements for dipole calibration, Huawei SAR lab has adopted three years calibration interval. But each measured dipole is expected to evaluate with the following criteria at least on annual interval in Appendix C.

a) There is no physical damage on the dipole;
b) System check with specific dipole is within 10% of calibrated value;
c) Return-loss is within 10% of calibrated measurement;
d) Impedance is within 5Ω from the previous measurement.

2) Network analyzer probe calibration against air, distilled water and a shorting block performed before measuring liquid parameters.

3 SAR Measurement Procedure

3.1 Scanning procedure

The DASY5 installation includes predefined files with recommended procedures for measurements and system check. They are read-only document files and destined as fully defined but unmeasured masks. All test positions (head or body-worn) are tested with the same configuration of test steps differing only in the grid definition for the different test positions.

- The “reference” and “drift” measurements are located at the beginning and end of the batch process. They measure the field drift at one single point in the liquid over the complete procedure. The indicated drift is mainly the variation of the DUT’s output power and should vary max. +/- 5 %.

- The “surface check” measurement tests the optical surface detection system of the DASY5 system by repeatedly detecting the surface with the optical and mechanical surface detector and comparing the results. The output gives the detecting heights of both systems, the difference between the two systems and the standard deviation of the detection repeatability. Air bubbles or refraction in the liquid due to separation of the sugar-water mixture gives poor repeatability (above ± 0.1mm). To prevent wrong results tests are only executed when the liquid is free of air bubbles. The difference between the optical surface detection and the actual surface depends on the probe and is specified with each probe. (It does not depend on the surface reflectivity or the probe angle to the surface within ± 30°.)

- The “area scan” measures the SAR above the DUT or verification dipole on a parallel plane to the surface. It is used to locate the approximate location of the peak SAR with 2D spline interpolation. The robot performs a stepped movement along one grid axis while the local electrical field strength is measured by the probe. The probe is touching the surface of the SAM during acquisition of measurement values. The standard scan uses large grid spacing for faster measurement. Standard grid spacing for head measurements is 15 mm in x- and y- dimension(⩽2GHz), 12 mm in x- and y-dimension(2-4GHz) and 10mm in x- and y- dimension(4-6GHz). If a finer resolution is needed, the grid spacing can be reduced. Grid spacing and orientation have no influence on the SAR result. For special applications where the standard scan method does not find the peak SAR within the grid, e.g. mobile phones with flip cover, the grid can be adapted in orientation.
  Results of this coarse scan are shown in Appendix B.

- A “zoom scan” measures the field in a volume around the 2D peak SAR value acquired in the previous “coarse” scan. This is a fine grid with maximum scan spatial resolution: Δx_{zoom}, Δy_{zoom} ⩽ 4GHz - ⩽ 5 mm and 4-6 GHz-⩽ 4 mm; Δz_{zoom} ⩽ 3GHz - ⩽ 5 mm, 3-4 GHz- ⩽ 4 mm and 4-6GHz-⩽2mm where the robot additionally moves the probe along the z-axis away from the bottom of the Phantom. DASY is also able to perform repeated zoom scans if more than 1 peak is found during area scan. In this document, the evaluated peak 1g and 10g averaged SAR values are shown in the 2D-graphics in Appendix B. Test results relevant for the specified standard (see chapter 1.4.)are shown in table form form in chapter 7.2.
- A Z-axis scan measures the total SAR value at the x-and y-position of the maximum SAR value found during the cube scan. The probe is moved away in z-direction from the bottom of the SAM phantom in 2 mm steps. This measurement shows the continuity of the liquid and can - depending in the field strength – also show the liquid depth. A z-axis scan of the measurement with maximum SAR value is shown in Appendix B.

3.2 Spatial Peak SAR Evaluation

The spatial peak SAR - value for 1 and 10 g is evaluated after the Cube measurements have been done. The basis of the evaluation are the SAR values measured at the points of the fine cube grid consisting of 7 x 7 x 7 points. The algorithm that finds the maximal averaged volume is separated into three different stages.

- The data between the dipole center of the probe and the surface of the phantom are extrapolated. This data cannot be measured since the center of the dipole is 2.7 mm away from the tip of the probe and the distance between the surface and the lowest measuring point is about 1 mm (see probe calibration sheet). The extrapolated data from a cube measurement can be visualized by selecting 'Graph Evaluated'.

- The maximum interpolated value is searched with a straight-forward algorithm. Around this maximum the SAR - values averaged over the spatial volumes (1g or 10 g) are computed using the 3d-spline interpolation algorithm. If the volume cannot be evaluated (i.e., if a part of the grid was cut off by the boundary of the measurement area) the evaluation will be started on the corners of the bottom plane of the cube.

- All neighboring volumes are evaluated until no neighboring volume with a higher average value is found.

Extrapolation

The extrapolation is based on a least square algorithm [W. Gander, Computermathematik, p.168-180]. Through the points in the first 3 cm along the z-axis, polynomials of order four are calculated. These polynomials are then used to evaluate the points between the surface and the probe tip. The points, calculated from the surface, have a distance of 1 mm from each other.

Interpolation

The interpolation of the points is done with a 3d-Spline. The 3d-Spline is composed of three one-dimensional splines with the "Not a knot"-condition [W. Gander, Computermathematik, p.141-150] (x, y and z -direction) [Numerical Recipes in C, Second Edition, p.123ff].

Volume Averaging

At First the size of the cube is calculated. Then the volume is integrated with the trapezoidal algorithm. 8000 points (20x20x20) are interpolated to calculate the average.

Advanced Extrapolation

DASY5 uses the advanced extrapolation option which is able to compansate boundary effects on E-field probes.

3.3 Data Storage and Evaluation

Data Storage

The DASY5 software stores the acquired data from the data acquisition electronics as raw data (in microvolt readings from the probe sensors), together with all necessary software parameters for the data evaluation (probe calibration data, liquid parameters and device frequency and modulation data) in measurement files with the extension DAE4. The software evaluates the desired unit and format for output each time the data is visualized or exported. This allows verification of the complete software setup even after the measurement and allows correction of incorrect parameter settings. For example, if a measurement has been performed with a wrong crest factor parameter in the device setup, the parameter can be corrected afterwards and the data can be re-evaluated.

The measured data can be visualized or exported in different units or formats, depending on the selected probe type ([V/m], [A/m], [°C], [mW/g], [mW/cm²], [dBrel], etc.). Some of these units are not available in certain situations or show meaningless results, e.g., a SAR output in a lossless media will always be zero. Raw data can also be exported to perform the evaluation with other software packages.

Data Evaluation by SEMCAD

The SEMCAD software automatically executes the following procedures to calculate the field units from the microvolt readings at the probe connector. The parameters used in the evaluation are stored in the configuration modules of the software:

Probe parameters:	- Sensitivity	$Norm_i$, a_{i0}, a_{i1}, a_{i2}
	- Conversion factor	$ConvF_i$
	- Diode compression point	Dcpi
Device parameters:	- Frequency	f
	- Crest factor	cf
Media parameters:	- Conductivity	σ
	- Density	ρ

These parameters must be set correctly in the software. They can be found in the component documents or they can be imported into the software from the configuration files issued for the DASY5 components. In the direct measuring mode of the multimeter option, the parameters of the actual system setup are used. In the scan visualization and export modes, the parameters stored in the corresponding document files are used.

The first step of the evaluation is a linearization of the filtered input signal to account for the compression characteristics of the detector diode. The compensation depends on the input signal, the diode type and the DC-transmission factor from the diode to the evaluation electronics.

If the exciting field is pulsed, the crest factor of the signal must be known to correctly compensate for peak power. The formula for each channel can be given as:

$$V_i = U_i + U_i^2 \bullet cf/dcp_i$$

with	V_i	= compensated signal of channel i	(i = x, y, z)
	U_i	= input signal of channel i	(i = x, y, z)
	cf	= crest factor of exciting field	(DASY parameter)
	dcp_i	= diode compression point	(DASY parameter)

From the compensated input signals the primary field data for each channel can be evaluated:

E-field probes: $E_i = (V_i / Norm_i \bullet ConvF)^{1/2}$

H-field probes: $H_i = (V_i)^{1/2} \bullet (a_{i0} + a_{i1}f + a_{i2}f^2)/f$

with V_i = compensated signal of channel i (i = x, y, z)

$Norm_i$ = sensor sensitivity of channel i (i = x, y, z) [mV/(V/m)^2] for E-field Probes

ConvF = sensitivity enhancement in solution

a_{ij} = sensor sensitivity factors for H-field probes

f = carrier frequency [GHz]

E_i = electric field strength of channel i in V/m

H_i = magnetic field strength of channel i in A/m

The RSS value of the field components gives the total field strength (Hermitian magnitude):

$$E_{tot} = (E_x^2 + E_Y^2 + E_z^2)^{1/2}$$

The primary field data are used to calculate the derived field units.

$$SAR = (E_{tot}^2 \bullet \sigma) / (\rho \bullet 1000)$$

with SAR = local specific absorption rate in mW/g

E_{tot} = total field strength in V/m

σ = conductivity in [mho/m] or [Siemens/m]

ρ = equivalent tissue density in g/cm^3

Note that the density is normally set to 1 (or 1.06), to account for actual brain density rather than the density of the simulation liquid.The power flow density is calculated assuming the excitation field to be a free space field.

$P_{pwe} = E_{tot}^2 / 3770$ or $P_{pwe} = H_{tot}^2 \bullet 37.7$

with P_{pwe} = equivalent power density of a plane wave in mW/cm^2

E_{tot} = total electric field strength in V/m

H_{tot} = total magnetic field strength in A/m

4 System Verification Procedure

4.1 Tissue Verification

The simulating liquids should be checked at the beginning of a series of SAR measurements to determine of the dielectic parameter are within the tolerances of the specified target values. The measured conductivity and relative permittivity should be within ± 5% of the target values.

The following materials are used for producing the tissue-equivalent materials.

Ingredients (% of weight)	**Body Tissue**					
Frequency Band (MHz)	**750**	**835**	900	**1800**	**1900**	2450
Water	50.3	52.4	56.0	69.91	69.91	73.2
Salt (NaCl)	1.6	1.40	0.76	0.13	0.13	0.04
Sugar	47	45.0	41.76	0.0	0.0	0.0
HEC	0.0	1.0	1.21	0.0	0.0	0.0
Bactericide	0.0	0.1	0.27	0.0	0.0	0.0
Triton X-100	1.0	0.0	0.0	0.0	0.0	0.0
DGBE	0.0	0.0	0.0	29.96	29.96	26.7

Table 4: Tissue Dielectric Properties

Salt: 99+% Pure Sodium Chloride; Sugar: 98+% Pure Sucrose; Water: De-ionized, 16MΩ+ resistivity
HEC: Hydroxyethyl Cellulose; DGBE: 99+% Di(ethylene glycol) butyl ether, [2-(2-butoxyethoxy)ethanol]
Triton X-100(ultra pure): Polyethylene glycol mono [4-(1,1,3,3-tetramethylbutyl)phenyl]ether

Tissue Type	Measured Frequency（MHz）	Target Tissue		Measured Tissue		Liquid Temp.	Test Date
		εr (+/-5%)	σ (S/m) (+/-5%)	εr	σ (S/m)		
750B	750	55.5 (52.72~58.28)	0.96 (0.91~1.01)	55.09	0.965	21.4°C	2013-8-06
	780	55.4 (52.63~58.17)	0.96 (0.91~1.01)	54.91	0.979		
835B	825	55.2 (52.44~57.96)	0.97 (0.92~1.02)	56.30	0.992	21.4°C	2013-8-07
	835	55.2 (52.44~57.96)	0.97 (0.92~1.02)	56.18	0.989		
	850	55.2 (52.44~57.96)	0.99 (0.94~1.04)	55.97	1.013		

1800B	1710	53.5 (50.83~56.18)	1.46 (1.39~1.53)	51.89	1.446	21.4°C	2013-8-12
	1730	53.5 (50.83~56.18)	1.48 (1.41~1.55)	51.85	1.463		
	1750	53.4 (50.73~56.07)	1.49 (1.42~1.56)	51.78	1.479		
	1800	53.3 (50.64~55.97)	1.52 (1.44~1.60)	51.78	1.529		
1900B	1850	53.3 (50.64~55.97)	1.52 (1.44~1.60)	53.94	1.475	21.4°C	2013-8-03
	1880	53.3 (50.64~55.97)	1.52 (1.44~1.60)	53.83	1.502		
	1900	53.3 (50.64~55.97)	1.52 (1.44~1.60)	53.87	1.533		
	1910	53.3 (50.64~55.97)	1.52 (1.44~1.60)	53.85	1.538		
ε_r= Relative permittivity, σ= Conductivity							

Table 5:Measured Tissue Parameter

Note: 1）The dielectric parameters of the tissue-equivalent liquid should be measured under similar ambient conditions and within 2 °C of the conditions expected during the SAR evaluation to satisfy protocol requirements.

2） KDB 865664 was ensured to be applied for probe calibration frequencies greater than or equal to 50MHz of the EUT frequencies.

3）The above measured tissue parameters were used in the DASY software to perform interpolation via the DASY software to determine actual dielectric parameters at the test frequencies. The SAR test plots may slightly differ from the table above since the DASY rounds to three significant digits.

4）For UMTS & LTE measurements in AWS band, and for 1800 MHz system verification the same TSL and 1750 MHz SAR probe calibration point have been used.

4.2 System Check

The system check is performed for verifying the accuracy of the complete measurement system and performance of the software. The system check is performed with tissue equivalent material according to IEEE P1528 (described above). The following table shows system check results for all frequency bands and tissue liquids used during the tests (Graphic Plot(s) see Appendix A).

System Check	Target SAR (1W) (+/-10%)		Measured SAR (Normalized to 1W)		Liquid Temp.	Test Date
	1-g (mW/g)	10-g (mW/g)	1-g (mW/g)	10-g (mW/g)		
D750V3 Body	8.80 (7.30~10.30)	5.84 (4.88~6.80)	8.60	5.76	21.4°C	2013-8-06
D835V2 Body	9.42 (7.82~11.02)	6.19 (5.17~7.21)	9.68	6.36	21.4°C	2013-8-07
D1800V2 Body	38.8 (34.92~42.68)	20.4 (18.36~22.44)	38.92	20.04	21.4°C	2013-8-12
D1900V2 Body	41.40 (37.26~45.54)	21.80 (19.62~23.98)	40.80	21.00	21.4°C	2013-8-03

Table 6:System Check Results

4.3 System check Procedure

The system check is performed by using a system check dipole which is positioned parallel to the planar part of the SAM phantom at the reference point. The distance of the dipole to the SAM phantom is determined by a plexiglass spacer. The dipole is connected to the signal source consisting of signal generator and amplifier via a directional coupler, N-connector cable and adaption to SMA. It is fed with a power of 250 mW. To adjust this power a power meter is used. The power sensor is connected to the cable before the system check to measure the power at this point and do adjustments at the signal generator. At the outputs of the directional coupler both return loss as well as forward power are controlled during the system check to make sure that emitted power at the dipole is kept constant. This can also be checked by the power drift measurement after the test (result on plot).
System check results have to be equal or near the values determined during dipole calibration (target SAR in table above) with the relevant liquids and test system.

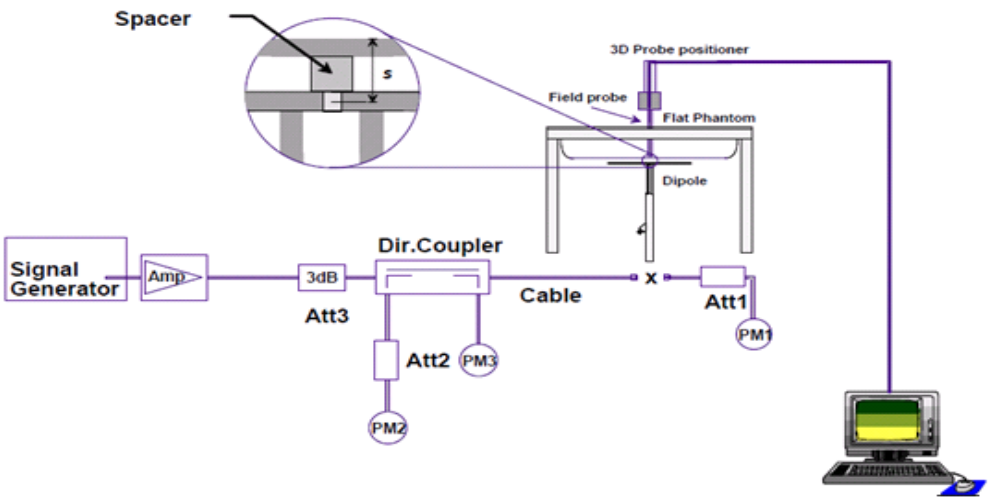

5 Measurement Uncertainty Evaluation

5.1 Measurement uncertainty evaluation for SAR test

The overall combined measurement uncertainty of the measurement system is ± 10.9% (K=1).
The expanded uncertainty (k=2) is assessed to be ± 21.9%
This measurement uncertainty budget is suggested by IEEE P1528 and determined by Schmid & Partner Engineering AG. The breakdown of the individual uncertainties is as follows:

Error Sources	Uncertainty Value	Probability Distribution	Divi-sor	c_i 1g	c_i 10g	Standard Uncertainty 1g	Standard Uncertainty10g	v_i^2 or v_{eff}
Measurement System								
Probe calibration	± 6.0%	Normal	1	1	1	± 6.0%	± 6.0%	∞
Axial isotropy	± 4.7%	Rectangular	√3	0.7	0.7	± 1.9%	± 1.9%	∞
Hemispherical isotropy	± 9.6%	Rectangular	√3	0.7	0.7	± 3.9%	± 3.9%	∞
Spatial resolution	± 0.0%	Rectangular	√3	1	1	± 0.0%	± 0.0%	∞
Boundary effects	± 1.0%	Rectangular	√3	1	1	± 0.6%	± 0.6%	∞
Probe linearity	± 4.7%	Rectangular	√3	1	1	± 2.7%	± 2.7%	∞
System detection limits	± 1.0%	Rectangular	√3	1	1	± 0.6%	± 0.6%	∞
Readout electronics	± 0.3%	Normal	1	1	1	± 0.3%	± 0.3%	∞
Response time	± 0.8%	Rectangular	√3	1	1	± 0.5%	± 0.5%	∞
Integration time	± 2.6%	Rectangular	√3	1	1	± 1.5%	± 1.5%	∞
RF ambient conditions	± 3.0%	Rectangular	√3	1	1	± 1.7%	± 1.7%	∞
Probe positioner	± 0.4%	Rectangular	√3	1	1	± 0.2%	± 0.2%	∞
Probe positioning	± 2.9%	Rectangular	√3	1	1	± 1.7%	± 1.7%	∞
Max. SAR evaluation	± 1.0%	Rectangular	√3	1	1	± 0.6%	± 0.6%	∞
Test Sample Related								
Device positioning	± 2.9%	Normal	1	1	1	± 2.9%	± 2.9%	145
Device holder uncertainty	± 3.6%	Normal	1	1	1	± 3.6%	± 3.6%	5
Power drift	± 5.0%	Rectangular	√3	1	1	± 2.9%	± 2.9%	∞
Phantom and Set-up								
Phantom uncertainty	± 4.0%	Rectangular	√3	1	1	± 2.3%	± 2.3%	∞
Liquid conductivity (target)	± 5.0%	Rectangular	√3	0.64	0.43	± 1.8%	± 1.2%	∞
Liquid conductivity (meas.)	± 2.5%	Normal	1	0.64	0.43	± 1.6%	± 1.1%	∞
Liquid permittivity (target)	± 5.0%	Rectangular	√3	0.6	0.49	± 1.7%	± 1.4%	∞
Liquid permittivity (meas.)	± 2.5%	Normal	1	0.6	0.49	± 1.5%	± 1.2%	∞
Combined Uncertainty	$u_c' = \sqrt{\sum_{i=1}^{21} c_i^2 u_i^2}$					± 10.9%	± 10.7%	387
Expanded Std. Uncertainty	$u_e = 2u_c$	Normal	**K=2**			**± 21.9%**	**± 21.4%**	

Table 7:Measurement uncertainties

5.2 Measurement uncertainty evaluation for system check

The overall combined measurement uncertainty of the measurement system is ± 9.5% (K=1).
The expanded uncertainty (k=2) is assessed to be ± 18.9%
This measurement uncertainty budget is suggested by IEEE P1528 and determined by Schmid & Partner Engineering AG. The breakdown of the individual uncertainties is as follows:

Error Sources	Uncertainty Value	Probability Distribution	Divi-sor	c_i 1g	c_i 10g	Standard Uncertainty 1g	Standard Uncertainty10g	v_i^2 or v_{eff}
Measurement System								
Probe calibration	± 6.0%	Normal	1	1	1	± 6.0%	± 6.0%	∞
Axial isotropy	± 4.7%	Rectangular	√3	1	1	± 2.7%	± 2.7%	∞
Hemispherical isotropy	± 9.6%	Rectangular	√3	0.7	0.7	± 0.0%	± 0.0%	∞
Boundary effects	± 1.0%	Rectangular	√3	1	1	± 0.6%	± 0.6%	∞
Probe linearity	± 4.7%	Rectangular	√3	1	1	± 2.7%	± 2.7%	∞
System detection limits	± 1.0%	Rectangular	√3	1	1	± 0.6%	± 0.6%	∞
Readout electronics	± 0.3%	Normal	1	1	1	± 0.3%	± 0.3%	∞
Response time	± 0.0%	Rectangular	√3	1	1	± 0.0%	± 0.0%	∞
Integration time	± 0.0%	Rectangular	√3	1	1	± 0.0%	± 0.0%	∞
RF ambient conditions	± 1.0%	Rectangular	√3	1	1	± 0.6%	± 0.6%	∞
Probe positioner	± 0.4%	Rectangular	√3	1	1	± 0.2%	± 0.2%	∞
Probe positioning	± 2.9%	Rectangular	√3	1	1	± 1.7%	± 1.7%	∞
Max. SAR evaluation	± 1.0%	Rectangular	√3	1	1	± 0.6%	± 0.6%	∞
Dipole								
Deviation of experimental dipole	± 5.5%	Rectangular	√3	1	1	± 3.2%	± 3.2%	∞
Dipole axis to liquid distance	± 2.0%	Rectangular	1	1	1	± 1.2%	± 1.2%	∞
Power drift	± 4.7%	Rectangular	√3	1	1	± 2.7%	± 2.7%	∞
Phantom and Set-up								
Phantom uncertainty	± 4.0%	Rectangular	√3	1	1	± 2.3%	± 2.3%	∞
Liquid conductivity (target)	± 5.0%	Rectangular	√3	0.64	0.43	± 1.8%	± 1.2%	∞
Liquid conductivity (meas.)	± 2.5%	Normal	1	0.64	0.43	± 1.6%	± 1.1%	∞
Liquid permittivity (target)	± 5.0%	Rectangular	√3	0.6	0.49	± 1.7%	± 1.4%	∞
Liquid permittivity (meas.)	± 2.5%	Normal	1	0.6	0.49	± 1.5%	± 1.2%	∞
Combined Uncertainty	$u_c' = \sqrt{\sum_{i=1}^{21} c_i^2 u_i^2}$					**± 9.5%**	**± 9.2%**	
Expanded Std. Uncertainty	$u_e = 2u_c$	Normal	**K=2**			**± 18.9%**	**± 18.4%**	

Table 8:Measurement uncertainties

6 SAR Test Configuration

6.1 GSM Test Configuration

SAR tests for GSM850 and GSM1900, a communication link is set up with a base station by air link. The tests in the band of GSM850 and GSM1900 are performed in the mode of GPRS/EGPRS function. Since the GPRS class is 12 for this EUT, it has at most 4 timeslots in uplink and at most 4 timeslots in downlink, the maximum total timeslot is 5. The EGPRS class is 12 for this EUT, it has at most 4 timeslots in uplink, and at most 4 timeslots in downlink, the maximum total timeslot is 5.

When SAR tests for EGPRS mode is necessary, GMSK modulation should be used to minimize SAR measurement error due to higher peak-to-average power (PAR) ratios inherent in 8-PSK.

According to specification 3GPP TS 51.010, the maximum power of the GSM can do the power reduction for the multi-slot.

The allowed power reduction in the multi-slot configuration is as following:

Number of timeslots in uplink assignment		Reduction of maximum output power, (dB)		
Band	Time Slots	GPRS (GMSK)	EGPRS (GMSK)	EGPRS (8PSK)
GSM850	1 TX slot	0	0	0
	2 TX slots	2	2	2
	3 TX slots	4	4	4
	4 TX slots	6	6	6
GSM1900	1 TX slot	0	0	0
	2 TX slots	2	2	2
	3 TX slots	4	4	4
	4 TX slots	6	6	6

Table 9: The allowed power reduction in the multi-slot configuration of GSM

6.2 UMTS Test Configuration

1) RMC

As the SAR body tests for UMTS Band V / IV / II, we established the radio link through call processing. The maximum output power were verified on high, middle and low channels for each test band according to 3GPP TS 34.121 with the following configuration:

1) 12.2kbps RMC, 64,144,384 kbps RMC with TPC set to 'all 1'.
2) Test loop Mode 1.

For the output power, the configurations for the DPCCH and $DPDCH_1$ are as followed (EUT do not support the $DPDCH_{2-n}$)

	Channel Bit Rate (kbps)	Channel Symbol Rate (ksps)	Spreading Factor	Spreading Code Number	Bits/Slot
DPCCH	15	15	256	0	10
$DPDCH_1$	15	15	256	64	10
	30	30	128	32	20
	60	60	64	16	40
	120	120	32	8	80
	240	240	16	4	160
	480	480	8	2	320
	960	960	4	1	640
$DPDCH_n$	960	960	4	1, 2, 3	640

SAR for body exposure configurations is measured using the 12.2 kbps RMC with the TPC bits configured to all "1s". SAR for other spreading codes and multiple DPDCHn, when supported by the EUT, are not required when the maximum average outputs of each RF channel, for each spreading code and DPDCHn configuration, are less than ¼ dB higher than those measured in 12.2 kbps RMC.

2) HSDPA

SAR for body exposure configurations is measured according to the "Body SAR Measurements'' procedures of 3G device. In addition, body SAR is also measured for HSDPA when the maximum average outputs of each RF channel with HSDPA active is at ¼ dB higher than that measured without HSDPA using 12.2kbps RMC or the maximum SAR 12.2kbps RMC is above 75% of the SAR limit. Body SAR for HSDPA is measured using an FRC with H-Set 1 in Sub-test 1 and a 12.2kbps RMC configured in Test Loop Mode 1, using the highest body SAR configuration in 12.2 kbps RMC without HSDPA.

HSDPA should be configured according to UE category of a test device. The number of HS-DSCH/HS-PDSCHs, HAPRQ processes, minimum inter-TTI interval, transport block sizes and RV coding sequence are defined by the H-set. To maintain a consistent test configuration and stable transmission condition, QPSK is used in the H-set for SAR testing. HS-DPCCH should be configured with a CQI feedback cycle of 4ms with a CQI repetition factor of 2 to maintain a constant rate of active CQI slots. The β_c and β_d gain factors for DPCCH and DPDCH were set according to the values in the below table, β_{hs} for HS-DPCCH is set automatically to the correct value when ΔACK, ΔNACK, ΔCQI = 8. The variation of the β_c /β_d ratio causes a power reduction at sub-tests 2 - 4.

Sub-test	β_c	β_d	β_d (SF)	β_c /β_d	β_{hs} (1)	CM(dB)(2)	MPR (dB)
1	2/15	15/15	64	2/15	4/15	0.0	0
2	12/15(3)	15/15(3)	64	12/15(3)	24/15	1.0	0
3	15/15	8/15	64	15/8	30/15	1.5	0.5
4	15/15	4/15	64	15/4	30/15	1.5	0.5

Note 1: Δ ACK, Δ NACK and Δ CQI = 8 , $A_{hs} = \beta_{hs}/\beta_c = 30/15$, $\beta_{hs} = 30/15 * \beta_c$

Note 2 : CM=1 for β_c/β_d= 12/15, β_{hs}/β_c = 24/15. For all other combinations of DPDCH,DPCCH and HS-DPCCH the MPR is based on the relative CM difference. This is applicable for only UEs that support HSDPA in release 6 and later releases.

Note 3 : For subtest 2 the β_c/β_d ratio of 12/15 for the TFC during the measurement period (TF1, TF0) is achieved by setting the signalled gain factors for the reference TFC (TF1,TF1) to β_c = 11/15 and β_d = 15/15

Table 10: Sub-tests for UMTS Release 5 HSDPA

The measurements were performed with a Fixed Reference Channel (FRC) and H-Set 1 QPSK.

Parameter	Value
Nominal average inf. bit rate	534 kbit/s
Inter-TTI Distance	3 TTI's
Number of HARQ Processes	2 Processes
Information Bit Payload	3202 Bits
MAC-d PDU size	336 Bits
Number Code Blocks	1 Block
Binary Channel Bits Per TTI	4800 Bits
Total Available SMLs in UE	19200 SMLs
Number of SMLs per HARQ Process	9600 SMLs
Coding Rate	0.67
Number of Physical Channel Codes	5

Table 11:settings of required H-Set 1 QPSK acc. to 3GPP 34.121

HS-DSCH Category	Maximum HS-DSCH Codes Received	Minimum Inter-TTI Interval	Maximum HS-DSCH Transport Block Bits/HS-DSCH TTI	Total Soft Channel Bits
1	5	3	7298	19200
2	5	3	7298	28800
3	5	2	7298	28800
4	5	2	7298	38400
5	5	1	7298	57600
6	5	1	7298	67200
7	10	1	14411	115200
8	10	1	14411	134400
9	15	1	25251	172800
10	15	1	27952	172800
11	5	2	3630	14400

12	5	1	3630	28800
13	15	1	34800	259200
14	15	1	42196	259200
15	15	1	23370	345600
16	15	1	27952	345600

Table 12:HSDPA UE category

3) HSUPA

Body SAR is also measured for HSDPA when the maximum average outputs of each RF channel with HSDPA active is at ¼ dB higher than that measured without HSDPA using 12.2kbps RMC or the maximum SAR 12.2kbps RMC is above 75% of the SAR limit. Body SAR for HSPA is measured with E-DCH Sub-test 5, using H-set 1 and QPSK for FRC and 12.2kbps RMC configured in Test Loop Mode 1 with power control algorithm 2, according to the highest body SAR configuration in 12.2 kbps RMC without HSPA.

Due to inner loop power control requirements in HSDPA, a commercial communication test set should be used for the output power and SAR tests. The 12.2 kbps RMC, FRC H-set 1 and E-DCH configurations for HSDPA should be configured according to the values indicated below as well as other applicable procedures described in the 'WCDMA Handset' and 'Release 5 HSDPA Data Device' sections of 3G device.

Sub-test	β_c	β_d	β_d (SF)	β_c/β_d	β_{hs} (1)	β_{ec}	β_{ed}	β_{ec} (SF)	β_{ed} (code)	CM (2) (dB)	MPR (dB)	AG (4) Index	E-TFCI
1	11/15 (3)	15/15 (3)	64	11/15 (3)	22/15	209/225	1039/225	4	1	1.0	0.0	20	75
2	6/15	15/15	64	6/15	12/15	12/15	94/75	4	1	3.0	2.0	12	67
3	15/15	9/15	64	15/9	30/15	30/15	β_{ed1}:47/15 β_{ed2}:47/15	4	2	2.0	1.0	15	92
4	2/15	15/15	64	2/15	4/15	2/15	56/75	4	1	3.0	2.0	17	71
5	15/15 (4)	15/15 (4)	64	15/15 (4)	30/15	24/15	134/15	4	1	1.0	0.0	21	81

Note 1: ΔACK, ΔNACK and ΔCQI = 8 , $A_{hs} = \beta_{hs}/\beta_c = 30/15$, $\beta_{hs} = 30/15 * \beta_c$

Note 2: CM = 1 for $\beta_c/\beta_d = 12/15$, $\beta_{hs}/\beta_c = 24/15$. For all other combinations of DPDCH, DPCCH, HS-DPCCH, E-DPDCH and E-DPCCH the MPR is based on the relative CM difference

Note 3 : For subtest 1 the β_c/β_d ratio of 11/15 for the TFC during the measurement period (TF1, TF0) is achieved by setting the signalled gain factors for the reference TFC (TF1,TF1) to β_c = 10/15 and β_d = 15/15

Note 4 : For subtest 5 the β_c/β_d ratio of 15/15 for the TFC during the measurement period (TF1, TF0) is achieved by setting the signalled gain factors for the reference TFC (TF1,TF1) to β_c = 14/15 and β_d = 15/15

Note 5 : Testing UE using E-DPDCH Physical Layer category 1 Sub-test 3 is not required according to TS 25.306 Table 5.1g

Note 6: β_{ed} can not be set directly; it is set by Absolute Grant Value.

Table 13:Subtests for UMTS Release 6 HSUPA

UE E-DCH Category	Maximum E-DCH Codes Transmitted	Number of HARQ Processes	E-DCH TTI(ms)	Minimum Speading Factor	Maximum E-DCH Transport Block Bits	Max Rate (Mbps)
1	1	4	10	4	7110	0.7296
2	2	8	2	4	2798	1.4592
	2	4	10	4	14484	
3	2	4	10	4	14484	1.4592
4	2	8	2	2	5772	2.9185
	2	4	10	2	20000	2.00
5	2	4	10	2	20000	2.00
6 (No DPDCH)	4	8	10	2SF2&2SF4	11484	5.76
	4	4	2		20000	2.00
7 (No DPDCH)	4	8	2	2SF2&2SF4	22996	?
	4	4	10		20000	?
NOTE: When 4 codes are transmitted in parallel, two codes shall be transmitted with SF2 and two with SF4.UE categories 1 to 6 support QPSK only.UE category 7 supports QPSK and 16QAM.(TS25.306-7.3.0).						

Table 14:HSUPA UE category

4) DC-HSDPA

In DC-HSDPA implementation of this device, the uplink parameters are the same as HSDPA. No additional channels and modulations (16 QAM, and 64 QAM) are supported in uplink. The difference is only in the downlink parameters, where two carriers are supported. HSDPA settings were used on uplink.

For Rel. 8 DC-HSDPA apply the four subtests from HSDPA Release 5 except use fixed reference channel H-Set 12 for DC-HSDPA. And we can apply the same SAR test exclusion criteria used for Rel. 6 HSPA for Rel. 7 HSPA+ and Rel. 8 DC-HSDPA. That is, if the HSPA, HSPA+, or the DC-HSDPA maximum output is not more than 0.25 dB higher than WCDMA, SAR measurement for those modes is not required.
The following tests were completed according to procedures in section 7.3.13 of 3GPP TS 34.108 v9.5.0. A summary of these settings are illustrated below:

Downlink Physical Channels are set as per 3GPP TS34.121-1 v9.0.0 E.5.0

Table E.5.0: Levels for HSDPA connection setup

Parameter During Connection setup	Unit	Value
P-CPICH_Ec/Ior	dB	-10
P-CCPCH and SCH_Ec/Ior	dB	-12
PICH _Ec/Ior	dB	-15
HS-PDSCH	dB	off
HS-SCCH_1	dB	off
DPCH_Ec/Ior	dB	-5
OCNS_Ec/Ior	dB	-3.1

Call is set up as per 3GPP TS34.108 v9.5.0 sub clause 7.3.13

The configurations of the fixed reference channels for HSDPA RF tests are described in 3GPP TS 34.121, annex C for FDD and 3GPP TS 34.122.

The measurements were performed with a Fixed Reference Channel (FRC) H-Set 12 with QPSK

Parameter	Value
Nominal average inf. bit rate	60 kbit/s
Inter-TTI Distance	1 TTI's
Number of HARQ Processes	6 Processes
Information Bit Payload	120 Bits
Number Code Blocks	1 Block
Binary Channel Bits Per TTI	960 Bits
Total Available SMLs in UE	19200 SMLs
Number of SMLs per HARQ Process	3200 SMLs
Coding Rate	0.15
Number of Physical Channel Codes	1

Table 15:settings of required H-Set 12 QPSK acc. to 3GPP 34.121

Note:

1.The RMC is intended to be used for DC-HSDPA mode and both cells shall transmit with identical parameters as listed in the table above.

2.Maximum number of transmission is limited to 1,i.e.,retransmission is not allowed. The redundancy and constellation version 0 shall be used.

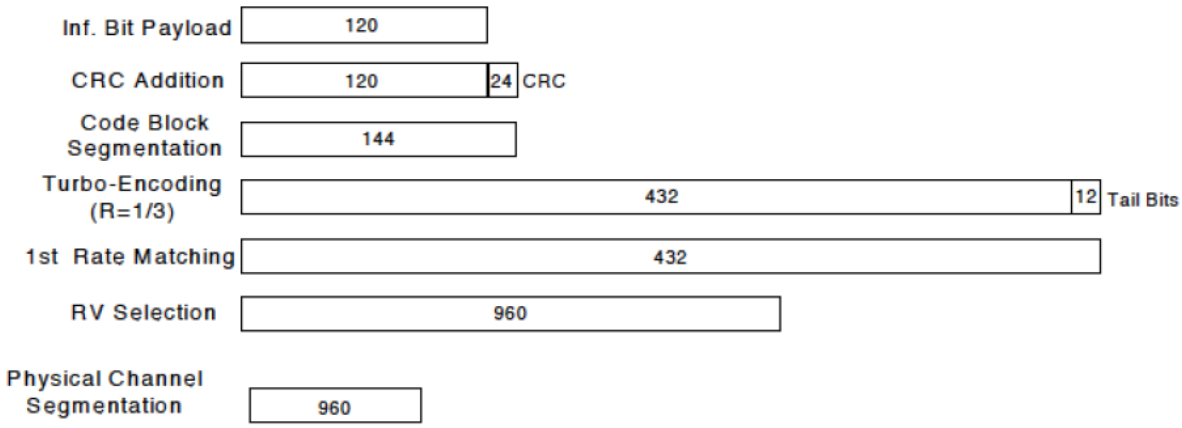

Figure C.8.19: Coding rate for Fixed reference Channel H-Set 12 (QPSK)

The following 4 Sub-tests for HSDPA were completed according to Release 5 procedures. A summary of subtest settings are illustrated below:

Sub-test	β_c	β_d	β_d (SF)	β_c/β_d	β_{hs} (1)	CM(dB)(2)	MPR (dB)
1	2/15	15/15	64	2/15	4/15	0.0	0
2	12/15(3)	15/15(3)	64	12/15(3)	24/15	1.0	0
3	15/15	8/15	64	15/8	30/15	1.5	0.5
4	15/15	4/15	64	15/4	30/15	1.5	0.5

Note 1: Δ ACK, Δ NACK and Δ CQI = 8 $A_{hs} = \beta_{hs}/\beta_c = 30/15$ $\beta_{hs} = 30/15 * \beta_c$

Note 2: CM=1 for β_c/β_d= 12/15, β_{hs}/β_c = 24/15. For all other combinations of DPDCH,DPCCH and HS-DPCCH the MPR is based on the relative CM difference. This is applicable for only UEs that support HSDPA in release 6 and later releases.

Note 3 : For subtest 2 the β_c/β_d ratio of 12/15 for the TFC during the measurement period (TF1, TF0) is achieved by setting the signalled gain factors for the reference TFC (TF1,TF1) to β_c = 11/15 and β_d = 15/15

Up commands are set continuously to set the UE to Max power.

Note:

1.The Dual Carriers transmission only applies to HSDPA physical channels

2.The Dual Carriers belong to the same Node and are on adjacent carriers.

3.The Dual Carriers do not support MIMO to serve UEs configured for dual cell operation

4.The Dual Carriers operate in the same frequency band .

5.The device doesn't support the modulation of 16QAM in uplink but 64QAM in downlink for DC-HSDPA mode.

6.The device doesn't support carrier aggregation for it just can operate in Release 8.

6.3 LTE Test Configuration

SAR for LTE band exposure configurations is measured according to the Procedures of KDB941225 D05. The CMW500 WideBand Radio Communication Tester was used for LTE output power measurements and SAR testing. Closed loop power control was used so the UE transmits with maximum output power during SAR testing.

When MPR is implemented permanently within the UE, regardless of network requirements, only those RB configurations allowed (see 3GPP standards) for the channel bandwidth and modulation combinations may be tested with MPR. Configurations with RB allocations below the required RB thresholds must be tested without MPR. A-MPR must always be disabled.

LTE Band II MPR as belows:

Modulation	Channel bandwidth / Transmission bandwidth configuration [RB]				MPR
	5 MHz	10 MHz	15 MHz	20 MHz	
QPSK	1	1	1	1	0
QPSK	≤8	≤ 12	≤16	≤ 18	0
QPSK	>8	> 12	>16	> 18	0
16 QAM	≤8	≤ 12	≤16	≤ 18	0
16 QAM	>8	> 12	>16	> 18	1

LTE Band IV MPR as belows:

Modulation	Channel bandwidth / Transmission bandwidth configuration [RB]				MPR
	5 MHz	10 MHz	15 MHz	20 MHz	
QPSK	1	1	1	1	0
QPSK	≤8	≤ 12	≤16	≤ 18	0
QPSK	>8	> 12	>16	> 18	0
16 QAM	≤8	≤ 12	≤16	≤ 18	0
16 QAM	>8	> 12	>16	> 18	1

LTE Band V MPR as belows:

Modulation	Channel bandwidth / Transmission bandwidth configuration [RB]		MPR
	5 MHz	10 MHz	
QPSK	1	1	0
QPSK	≤ 8	≤ 12	0
QPSK	> 8	> 12	0.7
16 QAM	≤ 8	≤ 12	0.4
16 QAM	> 8	> 12	1.5

LTE Band XIII MPR as belows:

Modulation	Channel bandwidth / Transmission bandwidth configuration [RB]		MPR
	5 MHz	10 MHz	
QPSK	1	1	0
QPSK	≤ 8	≤ 12	0
QPSK	> 8	> 12	0
16 QAM	≤ 8	≤ 12	0
16 QAM	> 8	> 12	1

A) Largest channel bandwidth standalone SAR test requirements

1) QPSK with 1 RB allocation

Start with the largest channel bandwidth and measure SAR for QPSK with 1 RB allocation, using the RB offset and required test channel combination with the highest maximum output power for RB offsets at the upper edge, middle and lower edge of each required test channel. When the reported SAR is ≤ 0.8 W/kg, testing of the remaining RB offset configurations and required test channels is not required for 1 RB allocation; otherwise, SAR is required for the remaining required test channels and only for the RB offset configuration with the highest output power for that channel. When the reported SAR of a required test channel is > 1.45 W/kg, SAR is required for all three RB offset configurations for that required test channel.

2) QPSK with 50% RB allocation

The procedures required for 1 RB allocation in 1) are applied to measure the SAR for QPSK with 50% RB allocation.

3) QPSK with 100% RB allocation

For QPSK with 100% RB allocation, SAR is not required when the highest maximum output power for 100 % RB allocation is less than the highest maximum output power in 50% and 1 RB allocations and the highest reported SAR for 1 RB and 50% RB allocation in 1) and 2) are ≤ 0.8 W/kg. Otherwise, SAR is measured for the highest output power channel and if the reported SAR is > 1.45 W/kg, the remaining required test channels must also be tested.

4) Higher order modulations
For each modulation besides QPSK; e.g., 16-QAM, 64-QAM, apply the QPSK procedures in above sections to determine the QAM configurations that may need SAR measurement. For each configuration identified as required for testing, SAR is required only when the highest maximum output power for the configuration in the higher order modulation is > ½ dB higher than the same configuration in QPSK or when the reported SAR for the QPSK configuration is > 1.45 W/kg.

B) Other channel bandwidth standalone SAR test requirements
For the other channel bandwidths used by the device in a frequency band, apply all the procedures required for the largest channel bandwidth in section A) to determine the channels and RB configurations that need SAR testing and only measure SAR when the highest maximum output power of a configuration requiring testing in the smaller channel bandwidth is > ½ dB higher than the equivalent channel configurations in the largest channel bandwidth configuration or the reported SAR of a configuration for the largest channel bandwidth is > 1.45 W/kg.

7 SAR Measurement Results

7.1 Conducted power measurements

For the measurements a Rohde & Schwarz Radio Communication Tester CMU 200 was used.
SAR drift measured at the same position in liquid before and after each SAR test as below 7.2 chapter.
Note: CMU200 measures GSM peak and average output power for active timeslots.For SAR the timebased average power is relevant. The difference in between depends on the duty cycle of the TDMA signal :

No. of timeslots	1	2	3	4
Duty Cycle	1:8.3	1:4.1	1:2.77	1:2.08
timebased avg. power compared to slotted avg. power	-9.19dB	-6.13dB	-4.42dB	-3.18dB

The signalling modes differ as follows:

mode	coding scheme	modulation
GPRS	CS1 to CS4	GMSK
EDGE	MCS1 to MCS4	GMSK
EDGE	MCS5 to MCS9	8PSK

Apart from modulation change (GMSK/8PSK) coding schemes differ in code rate without influence on the RF signal. Therefore one coding scheme per mode was selected for conducted power measurements.

7.1.1 Conducted power measurements GSM850

GSM850		Burst-Averaged output Power (dBm)			Division Factors	Frame-Averaged output Power (dBm)		
		128CH	190CH	251CH		128CH	190CH	251CH
Tested data from report no.: SYBH(Z-SAR)013072013-2								
GPRS/ EDGE (GMSK)	1 Tx Slot	31.92	31.96	31.96	-9.19	22.73	22.77	22.77
	2 Tx Slots	29.99	30.05	30.01	-6.13	**23.86**	**23.92**	**23.88**
	3 Tx Slots	27.97	27.92	27.92	-4.42	23.55	23.50	23.50
	4 Tx Slots	25.97	25.88	25.87	-3.18	22.79	22.70	22.69
EDGE (8PSK)	1 Tx Slot	25.39	25.46	25.30	-9.19	16.20	16.27	16.11
	2 Tx Slots	23.35	23.29	23.35	-6.13	17.22	17.16	17.22
	3 Tx Slots	21.45	21.28	21.41	-4.42	17.03	16.86	16.99
	4 Tx Slots	19.50	19.51	19.34	-3.18	16.32	16.33	16.16
E3276s-503 power tested at the worst SAR position of the report no.: SYBH(Z-SAR)013072013-2								
GPRS (GMSK)	2 Tx Slots	29.98	30.01	29.97	-6.13	23.85	23.88	23.84

Table 16:Test results conducted power measurement GSM850

Note: 1) The conducted power of GSM850 is measured with RMS detector.

2) Frame-averaged output power was calculated from the measured burst-averaged output power by converting the slot powers into linear units and calculating the energy over 8 timesolts.

3) Per KDB 941225 D03v01,the bolded GPRS 2Tx slots mode was selected for SAR testing according to the highest frame-averaged output power table.

7.1.2 Conducted power measurements GSM1900

GSM1900		Burst-Averaged output Power (dBm)			Division Factors	Frame-Averaged output Power (dBm)		
		512CH	661CH	810CH		512CH	661CH	810CH
Tested data from report no.: SYBH(Z-SAR)013072013-2								
GPRS/ EDGE (GMSK)	1 Tx Slot	28.84	28.78	28.78	-9.19	19.65	19.59	19.59
	2 Tx Slots	26.83	26.89	26.87	-6.13	**20.70**	**20.76**	**20.74**
	3 Tx Slots	24.85	24.83	24.85	-4.42	20.43	20.41	20.43
	4 Tx Slots	22.85	22.86	22.84	-3.18	19.67	19.68	19.66
EDGE (8PSK)	1 Tx Slot	24.39	24.38	24.42	-9.19	15.20	15.19	15.23
	2 Tx Slots	22.21	22.19	22.34	-6.13	16.08	16.06	16.21
	3 Tx Slots	19.98	19.93	20.01	-4.42	15.56	15.51	15.59
	4 Tx Slots	17.83	17.85	17.83	-3.18	14.65	14.67	14.65
E3276s-503 power tested at the worst SAR position of the report no.: SYBH(Z-SAR)013072013-2								
GPRS (GMSK)	2 Tx Slots	26.52	26.78	26.85	-6.13	20.39	20.65	20.72

Table 17:Test results conducted power measurement GSM1900

Note: 1) The conducted power of GSM1900 is measured with RMS detector.

2) Frame-averaged output power was calculated from the measured burst-averaged output power by converting the slot powers into linear units and calculating the energy over 8 timesolts.

3) Per KDB 941225 D03v01,the bolded GPRS 2Tx slots mode was selected for SAR testing according to the highest frame-averaged output power table.

7.1.3 Conducted power measurements UMTS Band V

UMTS Band V		Average Power (dBm)		
		4132CH	4182CH	4233CH
Tested data from report no.: SYBH(Z-SAR)013072013-2				
WCDMA	12.2kbps RMC	22.03	22.15	22.20
	64kbps RMC	21.97	22.04	22.22
	144kbps RMC	22.02	22.06	22.20
	384kbps RMC	22.00	22.05	22.18
HSDPA	Subtest 1	21.97	21.97	22.18
	Subtest 2	21.69	21.71	21.85
	Subtest 3	21.35	21.41	21.62
	Subtest 4	21.19	21.25	21.47
HSUPA	Subtest 1	20.84	20.83	21.12
	Subtest 2	19.84	19.94	20.18
	Subtest 3	20.80	19.88	20.14
	Subtest 4	20.19	20.21	20.40
	Subtest 5	21.43	21.38	21.62
DC-HSDPA	Subtest 1	21.74	21.82	21.96
	Subtest 2	21.58	21.49	21.81
	Subtest 3	21.30	21.22	21.38
	Subtest 4	21.08	21.09	21.41
E3276s-503 power tested at the worst SAR position of the report no.: SYBH(Z-SAR)013072013-2				
WCDMA	12.2kbps RMC	22.46	22.41	22.50

Table 18:Test results conducted power measurement UMTS Band V

Note: The conducted power of UMTS Band V is measured with RMS detector.

7.1.4 Conducted power measurements UMTS Band IV

UMTS Band IV		Average Power (dBm)		
		1312CH	1413CH	1513CH
Tested data from report no.: SYBH(Z-SAR)013072013-2				
WCDMA	12.2kbps RMC	22.09	21.87	22.26
	64kbps RMC	22.08	21.82	22.18
	144kbps RMC	22.09	21.78	22.13
	384kbps RMC	22.10	21.83	22.15
HSDPA	Subtest 1	22.10	21.82	22.14
	Subtest 2	21.61	21.64	21.78
	Subtest 3	20.99	20.79	21.34
	Subtest 4	20.57	20.93	20.78
HSUPA	Subtest 1	21.00	20.69	20.94
	Subtest 2	18.90	18.67	18.94
	Subtest 3	20.19	19.46	19.89
	Subtest 4	18.15	17.90	18.17
	Subtest 5	20.60	20.70	20.45
DC-HSDPA	Subtest 1	21.97	20.79	22.01
	Subtest 2	21.54	20.81	21.87
	Subtest 3	21.02	21.49	21.19
	Subtest 4	20.59	21.68	20.89
E3276s-503 power tested at the worst SAR position of the report no.: SYBH(Z-SAR)013072013-2				
WCDMA	12.2kbps RMC	22.05	22.21	22.08

Table 19:Test results conducted power measurement UMTS Band IV

Note: The conducted power of UMTS Band IV is measured with RMS detector.

7.1.5 Conducted power measurements UMTS Band II

UMTS Band II		Average Power (dBm)		
		9262CH	9400CH	9538CH
Tested data from report no.: SYBH(Z-SAR)013072013-2				
WCDMA	12.2kbps RMC	22.14	22.00	21.93
	64kbps RMC	21.99	21.95	21.89
	144kbps RMC	22.06	21.90	21.93
	384kbps RMC	22.04	21.90	21.90
HSDPA	Subtest 1	22.06	21.89	21.73
	Subtest 2	21.72	21.66	21.65
	Subtest 3	21.27	21.21	21.47
	Subtest 4	21.92	21.84	22.01
HSUPA	Subtest 1	20.82	20.66	20.60
	Subtest 2	20.07	19.90	19.74
	Subtest 3	20.34	20.82	20.55
	Subtest 4	20.27	20.10	20.80
	Subtest 5	21.40	20.94	20.49
DC-HSDPA	Subtest 1	21.91	21.79	21.59
	Subtest 2	21.58	21.54	21.48
	Subtest 3	21.19	21.16	21.29
	Subtest 4	21.19	21.10	21.87
E3276s-503 power tested at the worst SAR position of the report no.: SYBH(Z-SAR)013072013-2				
WCDMA	12.2kbps RMC	22.24	22.05	22.02

Table 20:Test results conducted power measurement UMTS Band II

Note: The conducted power of UMTS Band II is measured with RMS detector.

7.1.6 Conducted power measurements LTE Band II

LTE FDD Band II				Conducted Power(dBm)		
Bandwidth	Modulation	RB size	RB offset	Channel 18625	Channel 18900	Channel 19175
Tested data from report no.: SYBH(Z-SAR)013072013-2						
5MHz	QPSK	1	0	21.55	21.44	21.80
		1	13	21.99	21.88	21.93
		1	24	21.72	21.59	21.29
		12	0	21.83	21.66	21.87
		12	6	21.90	21.70	21.91
		12	13	21.91	21.65	21.65
		25	0	21.92	21.82	21.85
	16QAM	1	0	21.62	21.37	21.58
		1	13	22.04	21.84	21.62
		1	24	21.78	21.59	21.12
		12	0	21.00	20.56	20.72
		12	6	21.10	20.63	20.78
		12	13	20.90	20.62	20.37
		25	0	20.94	20.63	20.58
Bandwidth	Modulation	RB size	RB offset	Channel 18650	Channel 18900	Channel 19150
10MHz	QPSK	1	0	21.74	21.61	22.02
		1	25	22.04	21.92	22.31
		1	49	21.96	21.91	21.57
		25	0	21.66	21.45	21.91
		25	13	21.92	21.80	22.01
		25	25	21.82	21.64	21.66
		50	0	21.65	21.59	21.71
	16QAM	1	0	21.76	21.62	22.09
		1	25	22.14	21.98	21.96
		1	49	21.95	21.76	21.42
		25	0	20.71	20.32	20.91
		25	13	20.91	20.69	20.96
		25	25	20.79	20.61	20.50
		50	0	20.63	20.48	20.67

Bandwidth	Modulation	RB size	RB offset	Channel 18675	Channel 18900	Channel 19125
15MHz	QPSK	1	0	21.84	21.60	21.87
		1	38	22.30	21.92	22.25
		1	74	22.05	21.90	21.54
		36	0	21.84	21.54	22.14
		36	18	21.87	21.76	22.16
		36	39	21.88	21.84	21.91
		75	0	21.93	21.82	21.95
	16QAM	1	0	21.94	21.66	21.88
		1	38	22.42	22.03	22.23
		1	74	22.17	21.88	21.50
		36	0	20.92	20.51	21.08
		36	18	20.93	20.73	21.11
		36	39	20.81	20.64	20.81
		75	0	20.91	20.60	20.87
Bandwidth	**Modulation**	**RB size**	**RB offset**	**Channel 18700**	**Channel 18900**	**Channel 19100**
20MHz	QPSK	1	0	21.82	21.77	21.85
		1	50	22.25	22.04	22.35
		1	99	22.12	21.81	21.45
		50	0	21.91	21.61	21.97
		50	25	21.90	21.82	22.09
		50	50	21.89	21.64	21.79
		100	0	21.89	21.79	21.93
	16QAM	1	0	22.02	21.84	22.11
		1	50	22.33	22.03	22.50
		1	99	22.17	21.92	21.70
		50	0	20.85	20.55	21.06
		50	25	20.84	20.73	21.20
		50	50	20.83	20.69	20.87
		100	0	20.84	20.63	21.02
E3276s-503 power tested at the worst SAR position of the report no.: SYBH(Z-SAR)013072013-2						
20MHz	QPSK	1	50	22.39	22.09	22.45

Table 21:Test results conducted power measurement for LTE Band II

Note: The conducted power of LTE Band II is measured with RMS detector.

7.1.7 Conducted power measurements LTE Band IV

LTE FDD Band IV			Conducted Power(dBm)			
Bandwidth	Modulation	RB size	RB offset	Channel 19975	Channel 20175	Channel 20375
Tested data from report no.: SYBH(Z-SAR)013072013-2						
5MHz	QPSK	1	0	22.04	21.78	21.85
		1	13	22.50	21.96	22.05
		1	24	22.18	21.66	21.67
		12	0	22.29	21.81	21.86
		12	6	22.45	21.93	21.97
		12	13	22.42	21.83	21.84
		25	0	22.21	21.81	21.84
	16QAM	1	0	21.97	21.54	21.71
		1	13	22.44	21.79	21.94
		1	24	22.13	21.50	21.60
		12	0	21.13	20.79	20.94
		12	6	21.31	20.91	21.06
		12	13	21.29	20.82	20.94
		25	0	21.05	20.80	20.96
Bandwidth	Modulation	RB size	RB offset	Channel 20000	Channel 20175	Channel 20350
10MHz	QPSK	1	0	22.08	22.16	21.97
		1	25	22.61	22.05	22.11
		1	49	22.41	21.94	21.93
		25	0	22.06	21.67	21.69
		25	13	22.28	21.87	21.79
		25	25	22.14	21.56	21.57
		50	0	22.15	21.67	21.57
	16QAM	1	0	22.07	22.15	21.92
		1	25	22.58	22.11	22.03
		1	49	22.48	21.94	21.98
		25	0	20.92	20.60	20.74
		25	13	21.16	20.83	20.86
		25	25	20.93	20.51	20.74
		50	0	20.90	20.58	20.56

Bandwidth	Modulation	RB size	RB offset	Channel 20025	Channel 20175	Channel 20325
15MHz	QPSK	1	0	21.78	22.09	21.53
		1	50	22.28	22.01	22.07
		1	99	22.19	21.76	21.76
		50	0	22.07	21.77	21.76
		50	25	22.09	21.87	21.89
		50	50	22.00	21.67	21.69
		100	0	22.14	21.76	21.71
	16QAM	1	0	22.16	22.01	21.62
		1	50	22.65	21.95	22.15
		1	99	22.43	21.70	21.86
		50	0	21.16	20.76	20.77
		50	25	21.22	20.88	20.90
		50	50	21.15	20.67	20.70
		100	0	21.19	20.78	20.67
Bandwidth	**Modulation**	**RB size**	**RB offset**	**Channel 20050**	**Channel 20175**	**Channel 20300**
20MHz	QPSK	1	0	22.10	22.11	21.67
		1	50	22.60	22.01	22.08
		1	99	22.33	21.75	22.16
		50	0	22.26	21.85	21.73
		50	25	22.41	21.83	21.95
		50	50	22.21	21.65	21.79
		100	0	22.29	21.76	21.77
	16QAM	1	0	22.27	22.11	21.63
		1	50	22.75	22.05	22.04
		1	99	22.48	21.81	21.82
		50	0	21.13	20.89	20.62
		50	25	21.29	20.88	20.87
		50	50	21.09	20.70	20.68
		100	0	21.13	20.79	20.65
E3276s-503 power tested at the worst SAR position of the report no.: SYBH(Z-SAR)013072013-2						
20MHz	QPSK	50	25	22.32	22.27	22.35

Table 22:Test results conducted power measurement for LTE Band IV

Note: The conducted power of LTE Band IV is measured with RMS detector.

7.1.8 Conducted power measurements LTE Band V

LTE FDD Band V			Conducted Power(dBm)			
Bandwidth	**Modulation**	**RB size**	**RB offset**	**Channel 20425**	**Channel 20525**	**Channel 20625**
Tested data from report no.: SYBH(Z-SAR)013072013-2						
5MHz	QPSK	1	0	22.33	22.01	21.95
		1	13	22.60	22.54	21.92
		1	24	22.14	22.30	21.14
		12	0	21.72	21.63	21.31
		12	6	21.81	21.81	21.26
		12	13	21.61	21.90	20.93
		25	0	21.78	21.93	21.19
	16QAM	1	0	21.97	21.62	21.45
		1	13	22.25	22.13	21.48
		1	24	21.78	21.77	20.73
		12	0	20.88	20.70	20.52
		12	6	20.99	20.86	20.50
		12	13	20.80	20.95	20.06
		25	0	20.93	20.97	20.28
Bandwidth	**Modulation**	**RB size**	**RB offset**	**Channel 20450**	**Channel 20525**	**Channel 20600**
10MHz	QPSK	1	0	22.45	22.10	22.19
		1	25	22.48	22.69	22.32
		1	49	22.25	22.33	21.34
		25	0	21.50	21.36	21.27
		25	13	21.63	21.76	21.44
		25	25	21.28	21.48	20.99
		50	0	21.51	21.53	21.20
	16QAM	1	0	22.02	21.75	21.95
		1	25	22.17	22.30	22.17
		1	49	21.91	22.00	21.18
		25	0	20.61	20.58	20.58
		25	13	20.76	20.97	20.78
		25	25	20.40	20.69	20.25
		50	0	20.61	20.71	20.41
E3276s-503 power tested at the worst SAR position of the report no.: SYBH(Z-SAR)013072013-2						
10MHz	QPSK	25	13	22.33	22.11	22.15

Table 23:Test results conducted power measurement for LTE Band V

Note: The conducted power of LTE Band V is measured with RMS detector.

7.1.9 Conducted power measurements LTE Band XIII

LTE FDD Band XIII				Conducted Power(dBm)		
Bandwidth	Modulation	RB size	RB offset	Channel 23205	Channel 23230	Channel 23255
5MHz	QPSK	1	0	22.71	22.57	22.45
		1	13	22.90	22.77	22.90
		1	24	22.50	22.59	22.28
		12	0	22.68	22.65	22.80
		12	6	22.71	22.81	22.93
		12	13	22.60	22.67	22.71
		25	0	22.69	22.68	22.72
	16QAM	1	0	22.57	22.62	22.52
		1	13	22.91	22.84	22.97
		1	24	22.43	22.66	22.44
		12	0	21.75	21.70	21.84
		12	6	21.78	21.89	21.91
		12	13	21.66	21.76	21.82
		25	0	21.76	21.77	21.83
Bandwidth	Modulation	RB size	RB offset	Channel 23230	Channel 23230	Channel 23230
10MHz	QPSK	1	0	22.49	22.49	22.49
		1	25	22.89	22.89	22.89
		1	49	22.59	22.59	22.59
		25	0	22.58	22.58	22.58
		25	13	22.85	22.85	22.85
		25	25	22.58	22.58	22.58
		50	0	22.57	22.57	22.57
	16QAM	1	0	22.85	22.85	22.85
		1	25	22.76	22.76	22.76
		1	49	22.80	22.80	22.80
		25	0	21.59	21.59	21.59
		25	13	21.87	21.87	21.87
		25	25	21.60	21.60	21.60
		50	0	21.56	21.56	21.56

Table 24:Test results conducted power measurement for LTE Band XIII

Note: The conducted power of LTE Band XIII is measured with RMS detector.

7.2 SAR measurement Result

1) Per KDB447498 D01v05r01,testing of other required channels within the operating mode of a frequency band is not required when the reported(Scaled) SAR for the middle channel or highest output power channels is ≤0.8W/kg. When the maximum output power variation across the required test channels is > ½ dB, instead of the middle channel, the highest output power channel must be used.

2) Per KDB865664 D01v01,for each frequency band,repeated SAR measurement is required only when the measured SAR is ≥0.8W/Kg; if the deviation among the repeated measurement is ≤20%,and the measured SAR <1.45W/Kg,only one repeated measurement is required.

3). All measurement SAR result is scaled-up to account for tune-up tolerance is compliant.

4) Per Lab PBA Tracking Number 230023: for the antennas of the project is less than 2.5cm from the USB connector, if the measured SAR level for the horizontal position is < 1.2 W/Kg,testing at the additional position is optional.

5) Per KDB447498D02, the antenna is not within 1.0 cm from the tip of the dongle,so the tip side of the dongle does not need to be tested.

7.2.1 SAR measurement Result of GSM850

Test Position of Body with 5mm	Channel /Freq.(MHz)	Mode	SAR (W/kg)		Power Drift (dB)	Conducted Power (dBm)	Tune-up Limit (dBm)	Scaled SAR1-g (W/kg)	Liquid Temp.
			1-g	10-g					
Tested data from report no.: SYBH(Z-SAR)013072013-2									
Front Side	128/824.2	GPRS 2TS	0.806	0.495	0.060	29.99	31.00	1.017	21.4°C
Front Side	190/836.6	GPRS 2TS	0.820	0.502	0.140	30.05	31.00	1.021	21.4°C
Front Side	251/848.8	GPRS 2TS	0.773	0.477	0.190	30.01	31.00	0.971	21.4°C
Back Side	128/824.2	GPRS 2TS	0.853	0.488	-0.150	29.99	31.00	**1.076**	21.4°C
Back Side	190/836.6	GPRS 2TS	0.850	0.481	-0.170	30.05	31.00	1.058	21.4°C
Back Side-repeated*	190/836.6	GPRS 2TS	0.856	0.490	-0.070	30.05	31.00	1.065	21.4°C
Back Side	251/848.8	GPRS 2TS	0.844	0.476	-0.190	30.01	31.00	1.060	21.4°C
Left Side	190/836.6	GPRS 2TS	0.115	0.080	-0.170	30.05	31.00	0.143	21.4°C
Right Side	128/824.2	GPRS 2TS	0.668	0.385	0.190	29.99	31.00	0.843	21.4°C
Right Side	190/836.6	GPRS 2TS	0.666	0.380	0.140	30.05	31.00	0.829	21.4°C
Right Side	251/848.8	GPRS 2TS	0.660	0.374	0.030	30.01	31.00	0.829	21.4°C
E3276s-503 tested at the worst position from report no.: SYBH(Z-SAR)013072013-2									
Back Side	190/836.6	GPRS 2TS	0.821	0.474	0.140	22.98	31.00	1.038	21.4°C

Table 25: Test results Body SAR GSM850

Note:

1) * - repeated at the highest SAR measurement according to the FCC KDB 865664

2)The maximum SAR value of each test band is marked **bold**.

7.2.2 SAR measurement Result of GSM1900

Test Position of Body with 5mm	Channel /Freq.(MHz)	Mode	SAR (W/kg)		Power Drift (dB)	Conducted Power (dBm)	Tune-up Limit (dBm)	Scaled SAR1-g (W/kg)	Liquid Temp.
			1-g	10-g					
Tested data from report no.: SYBH(Z-SAR)013072013-2									
Front Side	661/1880	GPRS 2TS	0.401	0.227	0.100	26.89	28.00	0.518	21.4°C
Back Side	661/1880	GPRS 2TS	0.616	0.327	-0.090	26.89	28.00	0.795	21.4°C
Back Side	810/1909.8	GPRS 2TS	0.649	0.348	0.130	26.87	28.00	0.842	21.4°C
Back Side	512/1850.2	GPRS 2TS	0.513	0.264	-0.160	26.83	28.00	0.672	21.4°C
Left Side	661/1880	GPRS 2TS	0.180	0.097	-0.120	26.89	28.00	0.232	21.4°C
Right Side	661/1880	GPRS 2TS	0.557	0.299	-0.150	26.89	28.00	0.719	21.4°C
E3276s-503 tested at the worst position from report no.: SYBH(Z-SAR)013072013-2									
Back Side	810/1909.8	GPRS 2TS	0.750	0.390	-0.090	26.85	28.00	**0.977**	21.4°C

Table 26: Test results Body SAR GSM1900

Note:

1) * - repeated at the highest SAR measurement according to the FCC KDB 865664

2)The maximum SAR value of each test band is marked **bold**.

7.2.3 SAR measurement Result of UMTS Band V

Test Position of Body with 5mm	Channel /Freq.(MHz)	Mode	SAR (W/kg)		Power Drift (dB)	Conducted Power (dBm)	Tune-up Limit (dBm)	Scaled SAR1-g (W/kg)	Liquid Temp.
			1-g	10-g					
Tested data from report no.: SYBH(Z-SAR)013072013-2									
Front Side	4182/836.4	RMC	0.791	0.483	0.130	22.00	22.90	0.973	21.4°C
Front Side	4132/826.4	RMC	0.794	0.487	-0.010	22.10	22.90	0.955	21.4°C
Front Side	4233/846.6	RMC	0.849	0.515	0.010	22.14	22.90	1.011	21.4°C
Front Side-repeated*	4233/846.6	RMC	0.849	0.514	0.080	22.14	22.90	1.011	21.4°C
Back Side	4182/836.4	RMC	0.786	0.452	0.060	22.00	22.90	0.967	21.4°C
Back Side	4132/826.4	RMC	0.769	0.452	-0.110	22.10	22.90	0.925	21.4°C
Back Side	4233/846.6	RMC	0.812	0.469	-0.140	22.14	22.90	0.967	21.4°C
Left Side	4182/836.4	RMC	0.101	0.070	-0.060	22.00	22.90	0.124	21.4°C
Right Side	4182/836.4	RMC	0.655	0.371	0.160	22.10	22.90	0.787	21.4°C
E3276s-503 tested at the worst position from report no.: SYBH(Z-SAR)013072013-2									
Front Side	4233/846.6	RMC	0.996	0.619	0.080	22.50	22.90	**1.092**	21.4°C

Table 27:Test results Body SAR UMTS Band V

Note:

1) * - repeated at the highest SAR measurement according to the FCC KDB 865664

2) The maximum SAR value of each test band is marked **bold**.

3) Per KDB941225 D01, when maximum output of each RF channel with HSDPA/HSUPA active is ≤ ¼ dB higher than without HSDPA/HSUPA using 12.2 kbps RMC and maximum SAR for 12.2 kbps RMC is ≤ 75% of SAR limit, SAR evaluation for HSDPA/HSUPA is not required.

4）Per KDB941225 D02, When the maximum average output power of each RF channel with (uplink) HSPA+ or DC-HSDPA active is ≤ ¼ dB higher than that measured without HSPA+ or DC-HSDPA using 12.2 kbps RMC, or the maximum *reported* SAR for 12.2 kbps RMC without HSPA+ or DC-HSDPA is ≤ 75% of the SAR limit, SAR evaluation for HSPA+ or DC-HSDPA is not required.

7.2.4 SAR measurement Result of UMTS Band IV

Test Position of Body with 5mm	Channel /Freq.(MHz)	Mode	SAR (W/kg)		Power Drift (dB)	Conducted Power (dBm)	Tune-up Limit (dBm)	Scaled SAR1-g (W/kg)	Liquid Temp.
			1-g	10-g					
Tested data from report no.: SYBH(Z-SAR)013072013-2									
Front Side	1413/1732.6	RMC	0.564	0.290	0.130	21.87	22.90	0.715	21.4°C
Back Side	1413/1732.6	RMC	0.946	0.451	0.110	21.87	22.90	**1.199**	21.4°C
Back Side	1312/1712.4	RMC	0.885	0.420	-0.140	22.08	22.90	1.069	21.4°C
Back Side	1513/1752.6	RMC	0.996	0.476	-0.110	22.26	22.90	1.154	21.4°C
Back Side-repeated*	1513/1752.6	RMC	1.030	0.497	0.140	22.26	22.90	1.194	21.4°C
Left Side	1413/1732.6	RMC	0.053	0.030	0.140	21.87	22.90	0.067	21.4°C
Right Side	1413/1732.6	RMC	0.615	0.339	0.100	21.87	22.90	0.780	21.4°C
E3276s-503 tested at the worst position from report no.: SYBH(Z-SAR)013072013-2									
Back Side	1513/1752.6	RMC	0.940	0.470	0.070	22.21	22.90	1.102	21.4°C

Table 28:Test results Body SAR UMTS Band IV

Note:

1) * - repeated at the highest SAR measurement according to the FCC KDB 865664

2) The maximum SAR value of each test band is marked **bold**.

3) Per KDB941225 D01, when maximum output of each RF channel with HSDPA/HSUPA active is ≤ ¼ dB higher than without HSDPA/HSUPA using 12.2 kbps RMC and maximum SAR for 12.2 kbps RMC is ⩽ 75% of SAR limit, SAR evaluation for HSDPA/HSUPA is not required.

4) Per KDB941225 D02, When the maximum average output power of each RF channel with (uplink) HSPA+ or DC-HSDPA active is ≤ ¼ dB higher than that measured without HSPA+ or DC-HSDPA using 12.2 kbps RMC, or the maximum *reported* SAR for 12.2 kbps RMC without HSPA+ or DC-HSDPA is ≤ 75% of the SAR limit, SAR evaluation for HSPA+ or DC-HSDPA is not required.

7.2.5 SAR measurement Result of UMTS Band II

Test Position of Body with 5mm	Channel /Freq.(MHz)	Mode	SAR (W/kg)		Power Drift (dB)	Conducted Power (dBm)	Tune-up Limit (dBm)	Scaled SAR_{1-g} (W/kg)	Liquid Temp.
			1-g	10-g					
Tested data from report no.: SYBH(Z-SAR)013072013-2									
Front Side	9400/1880	RMC	0.721	0.411	0.030	22.00	22.90	0.887	21.4°C
Front Side	9262/1852.4	RMC	0.777	0.433	0.130	22.14	22.90	0.926	21.4°C
Front Side	9538/1907.6	RMC	0.597	0.345	0.170	21.93	22.90	0.746	21.4°C
Back Side	9400/1880	RMC	1.130	0.592	-0.180	22.00	22.90	**1.390**	21.4°C
Back Side	9262/1852.4	RMC	1.150	0.595	-0.160	22.14	22.90	1.370	21.4°C
Back Side-repeated*	9262/1852.4	RMC	1.140	0.586	0.030	22.14	22.90	1.358	21.4°C
Back Side	9538/1907.6	RMC	1.110	0.577	-0.110	21.93	22.90	1.388	21.4°C
Left Side	9400/1880	RMC	0.190	0.106	0.160	21.93	22.90	0.238	21.4°C
Right Side	9400/1880	RMC	0.704	0.393	-0.090	22.00	22.90	0.866	21.4°C
Right Side	9262/1852.4	RMC	0.630	0.352	-0.140	22.14	22.90	0.750	21.4°C
Right Side	9538/1907.6	RMC	0.744	0.411	-0.150	21.93	22.90	0.930	21.4°C
E3276s-503 tested at the worst position from report no.: SYBH(Z-SAR)013072013-2									
Back Side	9262/1852.4	RMC	1.090	0.558	0.050	22.05	22.90	1.326	21.4°C

Table 29:Test results Body SAR UMTS Band II

Note:

1) * - repeated at the highest SAR measurement according to the FCC KDB 865664

2) The maximum SAR value of each test band is marked **bold**.

3) Per KDB941225 D01, when maximum output of each RF channel with HSDPA/HSUPA active is ≤ ¼ dB higher than without HSDPA/HSUPA using 12.2 kbps RMC and maximum SAR for 12.2 kbps RMC is ≤ 75% of SAR limit, SAR evaluation for HSDPA/HSUPA is not required.

4）Per KDB941225 D02, When the maximum average output power of each RF channel with (uplink) HSPA+ or DC-HSDPA active is ≤ ¼ dB higher than that measured without HSPA+ or DC-HSDPA using 12.2 kbps RMC, or the maximum *reported* SAR for 12.2 kbps RMC without HSPA+ or DC-HSDPA is ≤ 75% of the SAR limit, SAR evaluation for HSPA+ or DC-HSDPA is not required.

7.2.6 SAR measurement Result of LTE Band II

Test Position of Body with 5mm	Test channel /Frequency	Test Mode	SAR Value (W/kg)		Power Drift (dB)	Conducted Power (dBm)	Tune-up Power (dBm)	Reported 1-g SAR (W/kg)	Liquid Temp.
			1-g	10-g					
Tested data from report no.: SYBH(Z-SAR)013072013-2									
1RB									
Front Side	19100/1900	20M QPSK 1RB#50	0.659	0.383	0.180	22.35	22.70	0.714	21.4°C
Back Side	19100/1900	20M QPSK 1RB#50	1.080	0.572	-0.130	22.35	22.70	1.171	21.4°C
Back Side	18700/1860	20M QPSK 1RB#50	1.060	0.550	0.170	22.25	22.70	1.176	21.4°C
Back Side	18900/1880	20M QPSK 1RB#50	1.120	0.587	-0.070	22.04	22.70	1.304	21.4°C
Back side-repeated*	18900/1880	20M QPSK 1RB#50	1.160	0.602	-0.050	22.04	22.70	**1.350**	21.4°C
Left Side	19100/1900	20M QPSK 1RB#50	0.169	0.096	-0.170	22.35	22.70	0.183	21.4°C
Right Side	19100/1900	20M QPSK 1RB#50	0.757	0.430	-0.090	22.35	22.70	0.821	21.4°C
Right Side	18700/1860	20M QPSK 1RB#50	0.566	0.322	-0.070	22.35	22.70	0.614	21.4°C
Right Side	18900/1880	20M QPSK 1RB#50	0.663	0.377	-0.150	22.35	22.70	0.719	21.4°C
50%RB									
Front Side	19100/1900	20M QPSK 50%RB#25	0.585	0.342	0.170	22.09	22.70	0.673	21.4°C
Back Side	19100/1900	20M QPSK 50%RB#25	1.090	0.569	-0.180	22.09	22.70	1.254	21.4°C
Back Side	18700/1860	20M QPSK 50%RB#0	1.030	0.528	-0.130	21.91	22.70	1.235	21.4°C
Back Side	18900/1880	20M QPSK 50%RB#25	1.090	0.566	-0.180	21.82	22.70	1.335	21.4°C
Left Side	19100/1900	20M QPSK 50%RB#25	0.159	0.090	-0.050	22.09	22.70	0.183	21.4°C
Right Side	19100/1900	20M QPSK 50%RB#25	0.706	0.400	-0.090	22.09	22.70	0.812	21.4°C
Right Side	18700/1860	20M QPSK 50%RB#0	0.523	0.297	-0.100	21.91	22.70	0.627	21.4°C
Right Side	18900/1880	20M QPSK 50%RB#25	0.636	0.360	-0.040	21.82	22.70	0.779	21.4°C
100%RB									
Back Side	19100/1900	20M QPSK 100%RB#0	1.040	0.546	0.000	21.93	22.70	1.242	21.4°C
Right Side	19100/1900	20M QPSK 100%RB#0	0.674	0.381	-0.140	21.93	22.70	0.805	21.4°C
E3276s-503 tested at the worst position from report no.: SYBH(Z-SAR)013072013-2									
Back Side	18900/1880	20M QPSK 1RB#50	1.120	0.575	0.080	22.09	22.70	1.289	21.4°C

Table 30:Test results Body SAR LTE Band II

Note: 1) * - repeated at the highest SAR measurement according to the FCC KDB 865664

2) The maximum SAR value of each test band is marked **bold**.

7.2.7 SAR measurement Result of LTE Band IV

Test Position of Body with 5mm	Test channel /Frequency	Test Mode	SAR Value (W/kg)		Power Drift (dB)	Conducted Power (dBm)	Tune-up Power (dBm)	Reported 1-g SAR (W/kg)	Liquid Temp.
			1-g	10-g					
Tested data from report no.: SYBH(Z-SAR)013072013-2									
1RB									
Front Side	20050/1720	20M QPSK 1RB#50	0.552	0.281	0.060	22.60	23.00	0.605	21.4°C
Back Side	20050/1720	20M QPSK 1RB#50	0.898	0.425	0.040	22.60	23.00	0.985	21.4°C
Back Side	20175/1720	20M QPSK 1RB#0	0.725	0.342	0.030	22.11	23.00	0.890	21.4°C
Back Side	20300/1720	20M QPSK 1RB#99	0.970	0.465	0.060	22.16	23.00	1.177	21.4°C
Left Side	20050/1720	20M QPSK 1RB#50	0.104	0.058	-0.080	22.60	23.00	0.114	21.4°C
Right Side	20050/1720	20M QPSK 1RB#50	0.574	0.315	0.130	22.60	23.00	0.629	21.4°C
50%RB									
Front Side	20050/1720	20M QPSK 50%RB#25	0.525	0.265	-0.190	22.41	23.00	0.601	21.4°C
Back Side	20050/1720	20M QPSK 50%RB#25	0.824	0.393	-0.030	22.41	23.00	0.944	21.4°C
Back Side	20175/1720	20M QPSK 50%RB#0	0.749	0.353	0.050	21.85	23.00	0.976	21.4°C
Back Side	20300/1720	20M QPSK 50%RB#25	1.020	0.485	-0.130	21.95	23.00	1.299	21.4°C
Back Side-repeated*	20300/1720	20M QPSK 50%RB#25	0.996	0.474	0.150	21.95	23.00	1.268	21.4°C
Left Side	20050/1720	20M QPSK 50%RB#25	0.105	0.058	0.080	22.41	23.00	0.120	21.4°C
Right Side	20050/1720	20M QPSK 50%RB#25	0.556	0.305	-0.160	22.41	23.00	0.637	21.4°C
100%RB									
Back Side	20050/1720	20M QPSK 100%RB#0	0.844	0.398	-0.170	22.29	23.00	0.994	21.4°C
E3276s-503 tested at the worst position from report no.: SYBH(Z-SAR)013072013-2									
Back Side	20300/1720	20M QPSK 50%RB#25	1.190	0.593	-0.180	22.35	23.00	**1.382**	21.4°C

Table 31:Test results Body SAR LTE Band IV

Note:

1) * - repeated at the highest SAR measurement according to the FCC KDB 865664

2) The maximum SAR value of each test band is marked **bold**.

7.2.8 SAR measurement Result of LTE Band V

Test Position of Body with 5mm	Test channel /Frequency	Test Mode	SAR Value (W/kg)		Power Drift (dB)	Conducted Power (dBm)	Tune-up Power (dBm)	Reported 1-g SAR (W/kg)	Liquid Temp.
			1-g	10-g					
Tested data from report no.: SYBH(Z-SAR)013072013-2									
1RB									
Front Side	20525/836.5	10M QPSK 1RB#25	0.980	0.595	-0.100	22.69	23.30	1.128	21.4°C
Front Side	20450/829	10M QPSK 1RB#25	0.907	0.561	0.110	22.48	23.30	1.095	21.4°C
Front Side	20600/844	10M QPSK 1RB#25	1.020	0.627	0.040	22.32	23.30	1.278	21.4°C
Back Side	20525/836.5	10M QPSK 1RB#25	1.100	0.620	-0.190	22.69	23.30	1.266	21.4°C
Back Side-repeated*	20525/836.5	10M QPSK 1RB#25	0.989	0.560	-0.180	22.69	23.30	1.138	21.4°C
Back Side	20450/829	10M QPSK 1RB#25	1.020	0.578	-0.130	22.48	23.30	1.232	21.4°C
Back Side	20600/844	10M QPSK 1RB#25	1.020	0.578	-0.080	22.32	23.30	1.278	21.4°C
Left Side	20525/836.5	10M QPSK 1RB#25	0.151	0.105	0.070	22.69	23.30	0.174	21.4°C
Right Side	20525/836.5	10M QPSK 1RB#25	0.872	0.500	0.190	22.69	23.30	1.003	21.4°C
Right Side	20450/829	10M QPSK 1RB#25	0.782	0.452	-0.090	22.48	23.30	0.945	21.4°C
Right Side	20600/844	10M QPSK 1RB#25	0.896	0.511	0.150	22.32	23.30	1.123	21.4°C
50%RB									
Front Side	20525/836.5	10M QPSK 50%RB#13	0.878	0.534	0.080	21.76	22.60	1.065	21.4°C
Front Side	20450/829	10M QPSK 50%RB#13	0.854	0.523	-0.160	21.63	22.60	1.068	21.4°C
Front Side	20600/844	10M QPSK 50%RB#13	0.937	0.565	-0.030	21.44	22.60	1.224	21.4°C
Back Side	20525/836.5	10M QPSK 50%RB#13	1.010	0.570	0.080	21.76	22.60	1.226	21.4°C
Back Side	20450/829	10M QPSK 50%RB#13	0.985	0.553	0.050	21.63	22.60	1.232	21.4°C
Back Side	20600/844	10M QPSK 50%RB#13	1.030	0.579	0.190	21.44	22.60	**1.345**	21.4°C
Left Side	20525/836.5	10M QPSK 50%RB#13	0.132	0.092	-0.110	21.76	22.60	0.160	21.4°C
Right Side	20525/836.5	10M QPSK 50%RB#13	0.723	0.417	-0.010	21.76	22.60	0.877	21.4°C
100%RB									
Front Side	20525/836.5	10M QPSK 100%RB#0	0.787	0.483	0.060	21.53	22.60	1.007	21.4°C

Back Side	20525/836.5	10M QPSK 100%RB#0	0.955	0.538	0.110	21.53	22.60	1.222	21.4°C
Right Side	20525/836.5	10M QPSK 100%RB#0	0.688	0.397	0.110	21.53	22.60	0.880	21.4°C
E3276s-503 tested at the worst position from report no.: SYBH(Z-SAR)013072013-2									
Back Side	20600/844	10M QPSK 50%RB#13	1.070	0.615	-0.080	22.15	22.60	1.187	21.4°C

Table 32:Test results Body SAR LTE Band V

Note:

1) * - repeated at the highest SAR measurement according to the FCC KDB 865664

2) The maximum SAR value of each test band is marked **bold**.

7.2.9 SAR measurement Result of LTE Band XIII

Test Position of Body with 5mm	Test channel /Frequency	Test Mode	SAR Value (W/kg)		Power Drift (dB)	Conducted Power (dBm)	Tune-up Power (dBm)	Reported 1-g SAR (W/kg)	Liquid Temp.
			1-g	10-g					
1RB									
Front Side	23230/782	10M QPSK 1RB#25	0.842	0.517	0.170	22.89	23.00	0.864	21.4°C
Back Side	23230/782	10M QPSK 1RB#25	1.050	0.613	0.020	22.89	23.00	1.077	21.4°C
Back Side-repeated	23230/782	10M QPSK 1RB#25	1.090	0.632	-0.060	22.89	23.00	**1.118**	21.4°C
Left Side	23230/782	10M QPSK 1RB#25	0.192	0.136	-0.100	22.89	23.00	0.197	21.4°C
Right Side	23230/782	10M QPSK 1RB#25	0.844	0.487	-0.040	22.89	23.00	0.866	21.4°C
50%RB									
Front Side	23230/782	10M QPSK 50%RB#13	0.955	0.591	0.190	22.85	23.00	0.989	21.4°C
Back Side	23230/782	10M QPSK 50%RB#13	1.040	0.599	-0.050	22.85	23.00	1.077	21.4°C
Left Side	23230/782	10M QPSK 50%RB#13	0.200	0.142	0.130	22.85	23.00	0.207	21.4°C
Right Side	23230/782	10M QPSK 50%RB#13	0.838	0.487	0.190	22.85	23.00	0.867	21.4°C
100%RB									
Front Side	23230/782	10M QPSK 100%RB#0	0.865	0.534	0.070	22.57	23.00	0.955	21.4°C
Back Side	23230/782	10M QPSK 100%RB#0	0.970	0.564	-0.080	22.57	23.00	1.071	21.4°C
Right Side	23230/782	10M QPSK 100%RB#0	0.784	0.461	-0.010	22.57	23.00	0.866	21.4°C

Table 33:Test results Body SAR LTE Band XIII

Note:

1) * - repeated at the highest SAR measurement according to the FCC KDB 865664

2) The maximum SAR value of each test band is marked **bold**.

7.3 simultaneous transmission SAR

GSM&UMTS&LTE mode can not work at the same time. Only one mode can work at a time.No Simultaneous transmission mode is provided for the device. Therefore, simultaneous transmission SAR is not required.

Appendix A. System Check Plots
(Pls See Appendix A.)

Appendix B. SAR Measurement Plots
(Pls See Appendix B.)

Appendix C. Calibration Certificate
(Pls See Appendix C.)

Appendix D. Photo documentation
(Pls See Appendix D.)

End