FCC SAR Compliance Test Report

Project Name: Mobile WiFi

Model : CDMA HWD11

FCC ID : QISE5776U-72

Report No. : SYBH(Z-SAR)038082012-2

	APPROVED	CHECKED	PREPARED
BY	Liu Chunlin	Aluinway	Xu Ruiqing
DATE	2012-09-29	2012-09-29	2012-09-29

The test results of this test report relate exclusively to the item(s) tested , The HUAWEI does not assume responsibility for any conclusions and generalisations drawn from the test results with regard to other specimens or samples of the type of the equipment represented by the test item. The test report may only be reproduced or published in full. Reproduction or publication of extracts from the report requires the prior written approval of HUAWEI.

Reliability Laboratory of Huawei Technologies Co., Ltd.

Administration Building, Headquarters of Huawei Technologies Co., Ltd., Bantian, Longgang District, Shenzhen, 518129, P.R.C
Tel: +86 755 28780808 Fax: +86 755 89652518

Table of Contents

1 General Information 4
1.1 Statement of Compliance 4
1.2 RF exposure limits 4
1.3 EUT Description 5
1.3.1 General Description 5
1.4 Test specification(s) 6
1.5 Testing laboratory 6
1.6 Applicant and Manufacturer 6
1.7 Application details 6
1.8 Ambient Condition 6
2 SAR Measurement System 7
2.1 SAR Measurement Set-up 7
2.2 Test environment 8
2.3 Data Acquisition Electronics description 8
2.4 Probe description 9
2.5 Phantom description 10
2.6 Device holder description 10
2.7 Test Equipment List 11
3 SAR Measurement Procedure 12
3.1 Scanning procedure 12
3.2 Spatial Peak SAR Evaluation 13
3.3 Data Storage and Evaluation 14
4 System Verification Procedure 16
4.1 Tissue Verification 16
4.2 System Check 17
4.3 Validation Procedure 18
5 Measurement Uncertainty Evaluation 19
5.1 Measurement uncertainty evaluation for SAR test 19
5.2 Measurement uncertainty evaluation for system validation 20
6 SAR Test Configuration 21
6.1 GSM Test Configuration 21
6.2 UMTS Test Configuration 22
6.3 CDMA 1x EVDO Releas A Test Configurations 27
6.4 CDMA 1x EVDO Releas B Test Configurations 28
6.5 CDMA 1xRTT Test Configurations 29
6.6 WiFi Test Configuration 30
7 SAR Measurement Results 30
7.1 Conducted power measurements 30
7.1.1 Conducted power measurements GSM1900 31
7.1.2 Conducted power measurements UMTS Band V 31
7.1.3 Conducted power measurements UMTS Band II 32
7.1.4 Conducted power measurements CDMA BC0 32
7.2 SAR measurement Result 33
7.2.1 SAR measurement Result of GSM1900 33
7.2.2 SAR measurement Result of UMTS Band V 33
7.2.3 SAR measurement Result of UMTS Band II 34
7.2.4 SAR measurement Result of CDMA BC0 34
7.2.5 SAR measurement Result of WiFi 35
7.3 Multiple Transmitter Evaluation 36
7.3.1 Stand-alone SAR 38
7.3.2 SAR Summation Scenario 38
7.3.3 Simultaneous SAR 38
Appendix A. System Check Plots 39
Appendix B. SAR Measurement Plots 39
Appendix C. Calibration Certificate 39
Appendix D. Photo documentation 39

※ ※ Modified History ※ ※

REV.	DESCRIPTION	ISSUED DATE	REMARK
Rev.1.0	Initial Test Report Release	2012-08-29	Xu Ruiqing
Rev.1.1	1.Added KDB941225 D06 in Section 1.4 'Test specification(s)' on page 6. 2.Revised the content of table 1 in page 4 and table 28 in page 38. 3.Revised the description under the SAR test result table from page 33 to 35. 4.Replaced the "Body SAR" with "Hotspot mode SAR" of the report.	2012-09-29	Xu Ruiqing

1 General Information

1.1 Statement of Compliance

The maximum results of Specific Absorption Rate (SAR) found during testing for CDMA HWD11 are as below Table 1.

Band	Distance (Hotspot mode)	Measured MAX SAR_{1g} (W/kg)	Conducted Power (dBm)	Tune-up Power(dBm)	Extraploted Result(W/kg)
GSM1900	10mm	0.666	29.83	30.50	0.777
UMTS Band V	10mm	0.732	21.88	23.00	0.947
UMTS Band II	10mm	**0.995**	22.39	23.00	1.145
CDMA BC0	10mm	0.732	23.81	25.00	0.963
WiFi	10mm	0.142	13.22	/	/
Simultaneous SAR_{Max} is 1.028W/kg					

Table 1:Summary of test result

The device is in compliance with Specific Absorption Rate（SAR）for general population/uncontraolled exposure limits of 1.6 W/Kg as averaged over any 1 g tissue according to the FCC rule §2.1093, the ANSI/IEEE C 95.1:1992, the NCRP Report Number 86 for uncontrolled environment, according to the Health Canada's Safety Code 6 and the Industry Canada Radio Standards Specification RSS-102 for General Population/Uncontrolled exposure, and had been tested in accordance with the measurement methods and procedures specified in IEEE Std 1528-2003 & IEEE Std 1528a-2005 and FCC OET Bulletin 65 Supplement C Edition 01-01.

1.2 RF exposure limits

Human Exposure	Uncontrolled Environment General Population	Controlled Environment Occupational
Spatial Peak SAR* (Brain/Body/Arms/Legs)	**1.60 mW/g**	8.00 mW/g
Spatial Average SAR** (Whole Body)	0.08 mW/g	0.40 mW/g
Spatial Peak SAR*** (Hands/Feet/Ankle/Wrist)	4.00 mW/g	20.00 mW/g

Table 2: RF exposure limits

The limit applied in this test report is shown in **bold** letters

Notes:

* The Spatial Peak value of the SAR averaged over any 1 gram of tissue (defined as a tissue volume in the shape of a cube) and over the appropriate averaging time

** The Spatial Average value of the SAR averaged over the whole body.

*** The Spatial Peak value of the SAR averaged over any 10 grams of tissue (defined as a tissue volume in the shape of a cube) and over the appropriate averaging time.

Uncontrolled Environments are defined as locations where there is the exposure of individuals who have no knowledge or control of their exposure.

Controlled Environments are defined as locations where there is exposure that may be incurred by persons who are aware of the potential for exposure, (i.e. as a result of employment or occupation.

1.3 EUT Description

Device Information:			
DUT Name:	Mobile WiFi		
Type Identification:	CDMA HWD11		
FCC ID:	QISE5776U-72		
SN No.:	L4H01A9262100085		
Device Type :	portable device		
Exposure Category:	uncontrolled environment / general population		
Hardware Version :	CL1E5776UM		
Software Version :	11.220.01.90.824		
Antenna Type :	internal antenna		
Device Operating Configurations:			
Supporting Mode(s)	GSM1900,UMTS Band V/II,BC0,WiFi(tested)		
Test Modulation	GSM(GMSK), WCDMA/BC0(QPSK)		
Device Class	B		
Operating Frequency Range(s)	Band	Tx (MHz)	Rx (MHz)
	GSM1900	1850-1910	1930-1990
	UMTS Band V	824-849	869-894
	UMTS Band II	1850-1910	1930-1990
	CDMA BC0	824-849	869-894
GPRS Multislot Class(12)	Max Number of Timeslots in Uplink:		4
	Max Number of Timeslots in Downlink:		4
	Max Total Timeslot:		5
EGPRS Multislot Class(12)	Max Number of Timeslots in Uplink:		4
	Max Number of Timeslots in Downlink:		4
	Max Total Timeslot:		5
HSDPA UE Category	14		
HSUPA UE category	6		
DC-HSDPA UE Category	24		
Power Class:	1,tested with power level 0(GSM1900)		
	3, tested with power control “all 1”(UMTS Band V)		
	3, tested with power control “all 1”(UMTS Band II)		
	Tested with power control all up (CDMA BC0)		
Test Channels (low-mid-high):	512-661-810 (GSM1900)		
	4132-4182-4233(UMTS Band V)		
	9262-9400-9538 (UMTS Band II)		
	1013-384-777 (CDMA BC0)		

Table 3:Device information and operating configuration

1.3.1 General Description

CDMA HWD11 LTE/EVDO/UMTS/GSM multi-mode 10 bands Mobile WiFi is subscriber equipment in the LTE/EVDO/UMTS/GSM system. CDMA HWD11 implement such functions as RF signal receiving /transmitting, LTE/EVDO/UMTS/GSM protocol processing, data service etc. and it can act as a Wi-Fi hotspot for user accessing to internet. Externally it provides USB interface (to connect to the notebook etc.) and USIM card interface. CDMA HWD11 has 3 internal antennas as default Wi-Fi , diversity, and main antenna.

1.4 Test specification(s)

ANSI Std C95.1 – 1992	Safety Levels with Respect to Human Exposure to Radio Frequency Electromagnetic Fields, 3 kHz – 300 GHz.(IEEE Std C95.1 – 1991)
IEEE Std 1528-2003	Recommended Practice for Determining the Peak Spatial-Average Specific Absorption Rate (SAR) in the Human Head from Wireless Communications Devices: Measurement Techniques
IEEE Std 1528a-2005	IEEE Recommended Practice for Determining the Peak Spatial-Average Specific Absorption Rate (SAR) in the Human Head from Wireless Communications Devices: Measurement Techniques Amendment 1: CAD File for Human Head Model (SAM Phantom)
OET Bulletin No. 65, Supplement C Edition 01-01– 2001	Evaluating Compliance with FCC Guidelines for Human Exposure to Radiofrequency Electromagnetic Fields---Additional Information for Evaluating Compliance of Mobile and Portable Devices with FCC Limits for Human Exposure to Radiofrequency Emissions
Canada's Safety Code 6	Limits of Human Exposure to Radiofrequency Electromagnetic Fields in the Frequency Range from 3 kHz to 300 GHz (99-EHD-237)
RSS-102	Radio Frequency Exposure Compliance of Radiocommunication Apparatus (All Frequency Bands (Issue 4 of March 2010)
KDB 941225 D01	SAR test for 3G devices v02
KDB 941225 D03	SAR Test Reduction GSM GPRS EDGE vo1
KDB 941225 D06	Hotspot SAR v01
KDB 447498 D01	Mobile Portable RF Exposure V04
KDB 248227 D01	SAR meas for 802.11 a/b/g v01r02

1.5 Testing laboratory

Test Site	The Reliability Laboratory of Huawei Technologies Co., Ltd.
Test Location	Zone K3,Huawei Industrial Base, Bantian Industry Area, Longgang District, Shenzhen, Guangdong, China
Telephone	+86 755 28780808
Fax	+86 755 89652518
State of accreditation	The Test laboratory (area of testing) is accredited according to ISO/IEC 17025. CNAS Registration number: L0310 A2LA TESTING CERT #2174.0

1.6 Applicant and Manufacturer

Company Name	HUAWEI TECHNOLOGIES CO., LTD
Address	Administration Building, Headquarters of Huawei Technologies Co., Ltd., Bantian, Longgang District, Shenzhen, 518129, P.R.C

1.7 Application details

Start Date of test	2012/08/10
End Date of test	2012/08/27

1.8 Ambient Condition

Ambient temperature	20°C – 24°C
Relative Humidity	30% – 70%

2 SAR Measurement System

2.1 SAR Measurement Set-up

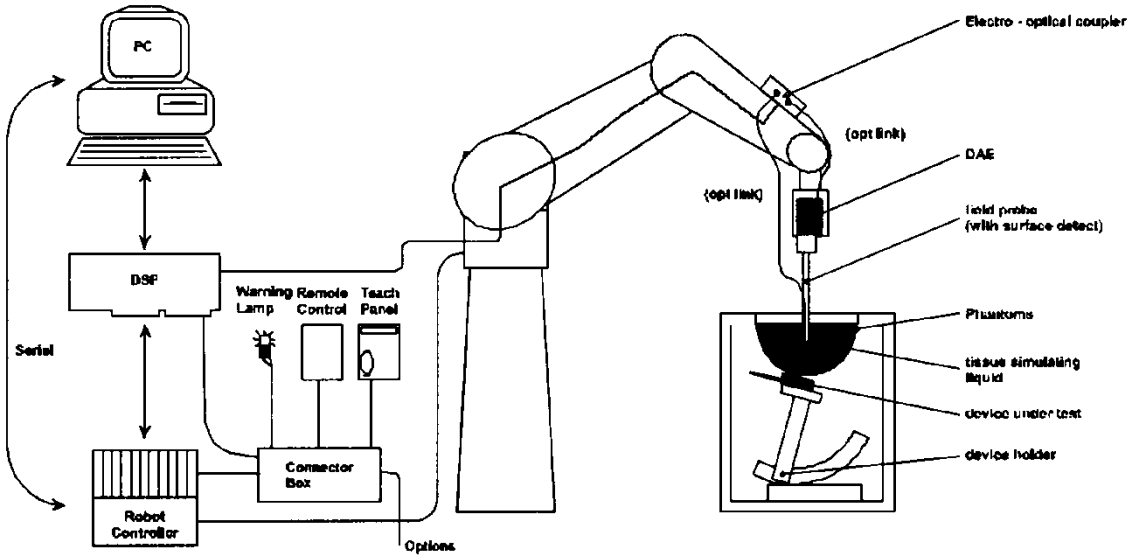

The DASY5 system for performing compliance tests consists of the following items:

- A standard high precision 6-axis robot (Stäubli RX family) with controller and software. An arm extension for accommodating the data acquisition electronics (DAE).

- A dosimetric probe, i.e. an isotropic E-field probe optimized and calibrated for usage in tissue simulating liquid. The probe is equipped with an optical surface detector system.

- A data acquisition electronic (DAE) which performs the signal amplification, signal multiplexing, AD-conversion, offset measurements, mechanical surface detection, collision detection, etc. The unit is battery powered with standard or rechargeable batteries. The signal is optically transmitted to the EOC.
- A unit to operate the optical surface detector which is connected to the EOC.
- The Electro-Optical Coupler (EOC) performs the conversion from the optical into a digital electric signal of the DAE. The EOC is connected to the DASY5 measurement server.
- The DASY5 measurement server, which performs all real-time data evaluation for field measurements and surface detection, controls robot movements and handles safety operation. A computer operating Windows XP.
- DASY5 software and SEMCAD data evaluation software.
- Remote control with teach panel and additional circuitry for robot safety such as warning lamps, etc.
- The generic twin phantom enabling the testing of left-hand and right-hand usage.
- The device holder for handheld mobile phones.
- Tissue simulating liquid mixed according to the given recipes.
- System validation dipoles allowing to validate the proper functioning of the system.

2.2 Test environment

The DASY4 measurement system is placed at the head end of a room with dimensions:
5 x 2.5 x 3 m³, the SAM phantom is placed in a distance of 75 cm from the side walls and 1.1m from the rear wall. Above the test system a 1.5 x 1.5 m² array of pyramid absorbers is installed to reduce reflections from the ceiling.
Picture 1 of the photo documentation shows a complete view of the test environment.
The system allows the measurement of SAR values larger than 0.005 mW/g.

2.3 Data Acquisition Electronics description

The data acquisition electronics (DAE) consist of a highly sensitive electrometer-grade preamplifier with auto-zeroing, a channel and gain-switching multiplexer, a fast 16 bit AD-converte and a command decoder with a control logic unit. Transmission to the measurement server is accomplished through an optical downlink for data and status information, as well as an optical uplink for commands and the clock.

The mechanical probe mounting device includes two different sensor systems for frontal and sideways probe contacts. They are used for mechanical surface detection and probe collision detection.

DAE4

Input Impedance	200MOhm	
The Inputs	symmetrical and floating	
Common mode rejection	above 80 dB	

2.4 Probe description

These probes are specially designed and calibrated for use in liquids with high permittivities. They should not be used in air, since the spherical isotropy in air is poor (±2 dB). The dosimetric probes have special calibrations in various liquids at different frequencies.

Isotropic E-Field Probe ES3DV3 for Dosimetric Measurements

Construction	Symmetrical design with triangular core Interleaved sensors Built-in shielding against static charges PEEK enclosure material (resistant to organic solvents, e.g., DGBE)	
Calibration	ISO/IEC 17025 calibration service available.	
Frequency	10 MHz to 4 GHz; Linearity: ± 0.2 dB (30 MHz to 4 GHz)	
Directivity	± 0.2 dB in HSL (rotation around probe axis) ± 0.3 dB in tissue material (rotation normal to probe axis)	
Dynamic range	5 µW/g to > 100 mW/g; Linearity: ± 0.2 dB	
Dimensions	Overall length: 337 mm (Tip: 20 mm) Tip diameter: 3.9 mm (Body: 12 mm) Distance from probe tip to dipole centers: 2.0 mm	
Application	General dosimetry up to 4 GHz Dosimetry in strong gradient fields Compliance tests of mobile phones	

Isotropic E-Field Probe EX3DV4 for Dosimetric Measurements

Construction	Symmetrical design with triangular core Built-in shielding against static charges PEEK enclosure material (resistant to organic solvents, e.g., DGBE)	
Calibration	ISO/IEC 17025 calibration service available.	
Frequency	10 MHz to >6 GHz; Linearity: ± 0.2 dB (30 MHz to 6 GHz)	
Directivity	± 0.3 dB in HSL (rotation around probe axis) ± 0.5 dB in tissue material (rotation normal to probe axis)	
Dynamic range	10 µW/g to > 100 mW/g; Linearity: ± 0.2 dB(noise:typically<1µW/g)	
Dimensions	Overall length: 337 mm (Tip:20 mm) Tip diameter:2.5 mm (Body:12 mm) Typical distance from probe tip to dipole centers: 1mm	
Application	High precision dosimetric measurements in any exposure scenario(e.g.,very strong gradient fields). Only probe which enables compliance testing for frequencies up to 6 GHz with precision of better 30%	

2.5 Phantom description

SAM Twin Phantom

Shell Thickness	2mm +/- 0.2 mm; The ear region: 6mm	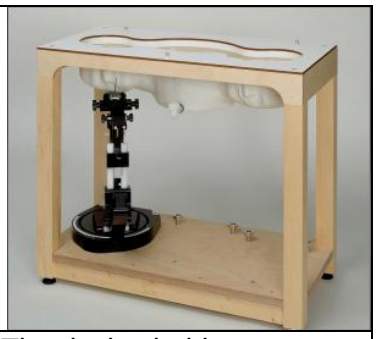
Filling Volume	Approximately 30 liters	
Dimensions	Length:1000mm; Width:500mm; Height: adjustable feet	
Measurement Areas	Left hand Right hand Flat phantom	
The bottom plate contains three pairs of bolts for locking the device holder. The device holder positions are adjusted to the standard measurement positions in the three sections. A white cover is provided to cover the phantom during off-periods to prevent water evaporation and changes in the liquid parameters. Free space scans of devices on top of this phantom cover are possible. Three reference marks are provided on the phantom counter. These reference marks are used to teach the absolute phantom position relative to the robot.		

ELI4 Phantom

Shell Thickness	2mm +/- 0.2 mm	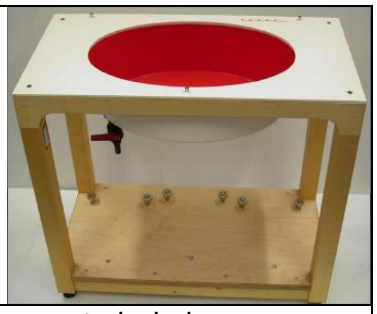
Filling Volume	Approximately 30 liters	
Dimensions	Length:1000mm; Width:500mm; Height: adjustable feet	
Measurement Areas	Flat phantom	
The ELI4 phantom is intended for compliance testing of handheld and body-mounted wireless devices in the frequency range of 30MHz to 6GHz. ELI4 is fully compatible with the latest draft of the standard IEC 62209-2 and all known tissue simulating liquids.		

2.6 Device holder description

The DASY5 device holder has two scales for device rotation (with respect to the body axis) and the device inclination (with respect to the line between the ear openings). The plane between the ear openings and the mouth tip has a rotation angle of 65°. The bottom plate contains three pair of bolts for locking the device holder. The device holder positions are adjusted to the standard measurement positions in the three sections. This device holder is used for standard mobile phones or PDA's only. If necessary an additional support of polystyrene material is used.

Larger DUT's (e.g. notebooks) cannot be tested using this device holder. Instead a support of bigger polystyrene cubes and thin polystyrene plates is used to position the DUT in all relevant positions to find and measure spots with maximum SAR values.
Therefore those devices are normally only tested at the flat part of the SAM.

2.7 Test Equipment List

This table gives a complete overview of the SAR measurement equipment
Devices used during the test described are marked ☒

	Manufacturer	Device	Type	Serial number	Date of last calibration)*
☒	SPEAG	Dosimetric E-Field Probe	EX3DV4	3736	2012-04-26
☐	SPEAG	Dosimetric E-Field Probe	ES3DV3	3168	2011-09-27
☒	SPEAG	835 MHz Validation Dipole	D835V2	4d126	2011-11-07
☐	SPEAG	1800 MHz Validation Dipole	D1800V2	2d184	2011-03-08
☒	SPEAG	1900 MHz Validation Dipole	D1900V2	5d143	2011-09-26
☐	SPEAG	2000 MHz Validation Dipole	D2000V2	1052	2011-03-10
☐	SPEAG	2300 MHz Validation Dipole	D2300V2	1016	2011-11-22
☒	SPEAG	2450 MHz Validation Dipole	D2450V2	860	2011-03-08
☐	SPEAG	2600 MHz Validation Dipole	D2600V2	1021	2011-11-21
☒	SPEAG	Data acquisition electronics	DAE4	852	2011-11-16
☐	SPEAG	Data acquisition electronics	DAE4	1236	2012-03-28
☒	SPEAG	Software	DASY 5	N/A	N/A
☐	SPEAG	Twin Phantom	SAM1	TP-1475	N/A
☐	SPEAG	Twin Phantom	SAM2	TP-1474	N/A
☒	SPEAG	Twin Phantom	SAM3	TP-1597	N/A
☒	SPEAG	Twin Phantom	SAM4	TP-1620	N/A
☐	SPEAG	Flat Phantom	ELI 4.0	TP-1038	N/A
☐	SPEAG	Flat Phantom	ELI 4.0	TP-1111	N/A
☒	R & S	Universal Radio Communication Tester	CMU 200	113989	2012-06-07
☒	Agilent	Universal Radio Communication Tester	E5515C	MY50260793	2011-10-24
☒	Agilent	Universal Radio Communication Tester	E5515C	MY50266847	2011-11-14
☒	Agilent	Universal Radio Communication Tester	E5515C	MY50266848	2011-11-14
☒	Agilent)*	Network Analyser	E5071B	MY42404956	2012-02-14
☒	Agilent	Dielectric Probe Kit	85070E	2484	N/A
☒	Agilent	Signal Generator	N5181A	MY47420989	2012-02-14
☒	MINI-CIRCUITS	Amplifier	ZHL-42W	QA0746001	N/A
☒	Agilent	Power Meter	E4417A	MY45101339	2012-02-14
☒	Agilent	Power Meter Sensor	E9321A	MY44420359	2012-02-14

Note: All the test equipments are calibrated once a year, except the dipoles, which are calibrated every three years. Moreover, we have self-calibration every year to the dipoles.

1) Per KDB 450824 D02 requirements for dipole calibration, Huawei SAR lab has adopted three years calibration interval. But each measured dipole is expected to evaluate with the following criteria at least on annual interval in Appendix C.

a) There is no physical damage on the dipole;
b) System validation with specific dipole is within 10% of calibrated value;
c) Return-loss is within 10% of calibrated measurement;
d) Impedance is within 5Ω from the previous measurement.

2) Network analyzer probe calibration against air, distilled water and a shorting block performed before measuring liquid parameters.

3 SAR Measurement Procedure

3.1 Scanning procedure

The DASY5 installation includes predefined files with recommended procedures for measurements and validation. They are read-only document files and destined as fully defined but unmeasured masks. All test positions (hotspot mode) are tested with the same configuration of test steps differing only in the grid definition for the different test positions.

- The reference and drift measurements are located at the beginning and end of the batch process. They measure the field drift at one single point in the liquid over the complete procedure. The indicated drift is mainly the variation of the DUT's output power and should vary max. +/- 5 %.

- The surface check measurement tests the optical surface detection system of the DASY5 system by repeatedly detecting the surface with the optical and mechanical surface detector and comparing the results. The output gives the detecting heights of both systems, the difference between the two systems and the standard deviation of the detection repeatability. Air bubbles or refraction in the liquid due to separation of the sugar-water mixture gives poor repeatability (above ± 0.1mm). To prevent wrong results tests are only executed when the liquid is free of air bubbles. The difference between the optical surface detection and the actual surface depends on the probe and is specified with each probe. (It does not depend on the surface reflectivity or the probe angle to the surface within ± 30°.)

- The area scan measures the SAR above the DUT or verification dipole on a parallel plane to the surface. It is used to locate the approximate location of the peak SAR with 2D spline interpolation. The robot performs a stepped movement along one grid axis while the local electrical field strength is measured by the probe. The probe is touching the surface of the SAM during acquisition of measurement values. The standard scan uses large grid spacing for faster measurement. Standard grid spacing for head measurements is 15 mm in x- and y- dimension. If a finer resolution is needed, the grid spacing can be reduced. Grid spacing and orientation have no influence on the SAR result. For special applications where the standard scan method does not find the peak SAR within the grid, e.g. mobile phones with flip cover, the grid can be adapted in orientation.
  Results of this coarse scan are shown in Appendix B.

- A 7x7x7 zoom scan measures the field in a volume around the 2D peak SAR value acquired in the previous coarse scan. This is a fine 7x7 grid where the robot additionally moves the probe in 7 steps along the z-axis away from the bottom of the Phantom. Grid spacing for the cube measurement is 5 mm in x and y-direction and 5 mm in z-direction. DASY5 is also able to perform repeated zoom scans if more than 1 peak is found during area scan. In this document, the evaluated peak 1g and 10g averaged SAR values are shown in the 2D-graphics in Appendix B. Test results relevant for the specified standard (see chapter 1.4.) are shown in table form in chapter 7.2.

- A Z-axis scan measures the total SAR value at the x-and y-position of the maximum SAR value found during the cube 7x7x7 scan. The probe is moved away in z-direction from the bottom of the SAM phantom in 2mm steps. This measurement shows the continuity of the liquid and can - depending in the field strength – also show the liquid depth. A z-axis scan of the measurement with maximum SAR value is shown in Appendix B.

3.2 Spatial Peak SAR Evaluation

The spatial peak SAR - value for 1 and 10 g is evaluated after the Cube measurements have been done. The basis of the evaluation are the SAR values measured at the points of the fine cube grid consisting of 7 x 7 x 7 points. The algorithm that finds the maximal averaged volume is separated into three different stages.

- The data between the dipole center of the probe and the surface of the phantom are extrapolated. This data cannot be measured since the center of the dipole is 2.7 mm away from the tip of the probe and the distance between the surface and the lowest measuring point is about 1 mm (see probe calibration sheet). The extrapolated data from a cube measurement can be visualized by selecting 'Graph Evaluated'.

- The maximum interpolated value is searched with a straight-forward algorithm. Around this maximum the SAR - values averaged over the spatial volumes (1g or 10 g) are computed using the 3d-spline interpolation algorithm. If the volume cannot be evaluated (i.e., if a part of the grid was cut off by the boundary of the measurement area) the evaluation will be started on the corners of the bottom plane of the cube.

- All neighboring volumes are evaluated until no neighboring volume with a higher average value is found.

Extrapolation

The extrapolation is based on a least square algorithm [W. Gander, Computermathematik, p.168-180]. Through the points in the first 3 cm along the z-axis, polynomials of order four are calculated. These polynomials are then used to evaluate the points between the surface and the probe tip. The points, calculated from the surface, have a distance of 1 mm from each other.

Interpolation

The interpolation of the points is done with a 3d-Spline. The 3d-Spline is composed of three one-dimensional splines with the "Not a knot"-condition [W. Gander, Computermathematik, p.141-150] (x, y and z -direction) [Numerical Recipes in C, Second Edition, p.123ff].

Volume Averaging

At First the size of the cube is calculated. Then the volume is integrated with the trapezoidal algorithm. 8000 points (20x20x20) are interpolated to calculate the average.

Advanced Extrapolation

DASY5 uses the advanced extrapolation option which is able to compansate boundary effects on E-field probes.

3.3 Data Storage and Evaluation

Data Storage

The DASY5 software stores the acquired data from the data acquisition electronics as raw data (in microvolt readings from the probe sensors), together with all necessary software parameters for the data evaluation (probe calibration data, liquid parameters and device frequency and modulation data) in measurement files with the extension DAE4. The software evaluates the desired unit and format for output each time the data is visualized or exported. This allows verification of the complete software setup even after the measurement and allows correction of incorrect parameter settings. For example, if a measurement has been performed with a wrong crest factor parameter in the device setup, the parameter can be corrected afterwards and the data can be re-evaluated.

The measured data can be visualized or exported in different units or formats, depending on the selected probe type ([V/m], [A/m], [°C], [mW/g], [mW/cm²], [dBrel], etc.). Some of these units are not available in certain situations or show meaningless results, e.g., a SAR output in a lossless media will always be zero. Raw data can also be exported to perform the evaluation with other software packages.

Data Evaluation by SEMCAD

The SEMCAD software automatically executes the following procedures to calculate the field units from the microvolt readings at the probe connector. The parameters used in the evaluation are stored in the configuration modules of the software:

Probe parameters:	- Sensitivity	$Norm_i$, a_{i0}, a_{i1}, a_{i2}
	- Conversion factor	$ConvF_i$
	- Diode compression point	Dcpi
Device parameters:	- Frequency	f
	- Crest factor	cf
Media parameters:	- Conductivity	σ
	- Density	ρ

These parameters must be set correctly in the software. They can be found in the component documents or they can be imported into the software from the configuration files issued for the DASY5 components. In the direct measuring mode of the multimeter option, the parameters of the actual system setup are used. In the scan visualization and export modes, the parameters stored in the corresponding document files are used.

The first step of the evaluation is a linearization of the filtered input signal to account for the compression characteristics of the detector diode. The compensation depends on the input signal, the diode type and the DC-transmission factor from the diode to the evaluation electronics.

If the exciting field is pulsed, the crest factor of the signal must be known to correctly compensate for peak power. The formula for each channel can be given as:

$$V_i = U_i + U_i^2 \bullet cf/dcp_i$$

with	V_i	= compensated signal of channel i	(i = x, y, z)
	U_i	= input signal of channel i	(i = x, y, z)
	cf	= crest factor of exciting field	(DASY parameter)
	dcp_i	= diode compression point	(DASY parameter)

From the compensated input signals the primary field data for each channel can be evaluated:

E-field probes: $E_i = (V_i / Norm_i \bullet ConvF)^{1/2}$

H-field probes: $H_i = (V_i)^{1/2} \bullet (a_{i0} + a_{i1}f + a_{i2}f^2)/f$

with V_i = compensated signal of channel i (i = x, y, z)
$Norm_i$ = sensor sensitivity of channel i (i = x, y, z)
[mV/(V/m)^2] for E-field Probes
ConvF = sensitivity enhancement in solution
a_{ij} = sensor sensitivity factors for H-field probes
f = carrier frequency [GHz]
E_i = electric field strength of channel i in V/m
H_i = magnetic field strength of channel i in A/m

The RSS value of the field components gives the total field strength (Hermitian magnitude):

$$E_{tot} = (E_x^2 + E_Y^2 + E_z^2)^{1/2}$$

The primary field data are used to calculate the derived field units.

$$SAR = (E_{tot}^2 \bullet \sigma) / (\rho \bullet 1000)$$

with SAR = local specific absorption rate in mW/g
E_{tot} = total field strength in V/m
σ = conductivity in [mho/m] or [Siemens/m]
ρ = equivalent tissue density in g/cm^3

Note that the density is normally set to 1 (or 1.06), to account for actual brain density rather than the density of the simulation liquid.The power flow density is calculated assuming the excitation field to be a free space field.

$P_{pwe} = E_{tot}^2 / 3770$ or $P_{pwe} = H_{tot}^2 \bullet 37.7$

with P_{pwe} = equivalent power density of a plane wave in mW/cm^2
E_{tot} = total electric field strength in V/m
H_{tot} = total magnetic field strength in A/m

4 System Verification Procedure

4.1 Tissue Verification

The simulating liquids should be checked at the beginning of a series of SAR measurements to determine of the dielectic parameter are within the tolerances of the specified target values. The measured conductivity and relative permittivity should be within ± 5% of the target values.

The following materials are used for producing the tissue-equivalent materials.

Ingredients (% of weight)	Body Tissue					
Frequency Band (MHz)	450	**835**	900	1800	**1900**	**2450**
Water	51.16	52.4	56.0	69.91	69.91	73.2
Salt (NaCl)	1.49	1.40	0.76	0.13	0.13	0.04
Sugar	46.78	45.0	41.76	0.0	0.0	0.0
HEC	0.52	1.0	1.21	0.0	0.0	0.0
Bactericide	0.05	0.1	0.27	0.0	0.0	0.0
Triton X-100	0.0	0.0	0.0	0.0	0.0	0.0
DGBE	0.0	0.0	0.0	29.96	29.96	26.7

Table 4: Tissue Dielectric Properties

Salt: 99+% Pure Sodium Chloride; Sugar: 98+% Pure Sucrose; Water: De-ionized, 16MΩ+ resistivity
HEC: Hydroxyethyl Cellulose; DGBE: 99+% Di(ethylene glycol) butyl ether, [2-(2-butoxyethoxy)ethanol]
Triton X-100(ultra pure): Polyethylene glycol mono [4-(1,1,3,3-tetramethylbutyl)phenyl]ether

Tissue Type	Measured Frequency （MHz）	Target Tissue		Measured Tissue		Liquid Temp.	Test Date
		εr (+/-5%)	σ (S/m) (+/-5%)	εr	σ (S/m)		
835B	825	55.20 (52.44~57.96)	0.97 (0.92~1.02)	55.07	0.979	21.4°C	2012/8/10
	835	55.20 (52.44~57.96)	0.97 (0.92~1.02)	55.00	0.982		
	850	55.20 (52.44~57.96)	0.99 (0.94~1.04)	54.98	0.992		
835B	825	55.20 (52.44~57.96)	0.97 (0.92~1.02)	55.58	0.982	21.4°C	2012/8/26
	835	55.20 (52.44~57.96)	0.97 (0.92~1.02)	55.50	0.984		
	850	55.20 (52.44~57.96)	0.99 (0.94~1.04)	55.34	0.989		
1900B	1850	53.30 (50.64~55.97)	1.52 (1.44~1.60)	53.90	1.477	21.4°C	2012/8/25
	1880	53.30 (50.64~55.97)	1.52 (1.44~1.60)	53.78	1.504		
	1900	53.30 (50.64~55.97)	1.52 (1.44~1.60)	53.28	1.536		
	1910	53.30 (50.64~55.97)	1.52 (1.44~1.60)	53.81	1.541		
2450B	2410	52.80 (50.16~55.44)	1.91 (1.81~2.00)	52.98	1.945	21.4°C	2012/8/27
	2435	52.70 (50.07~55.34)	1.94 (1.84~2.04)	52.88	1.967		
	2450	52.70 (50.07~55.34)	1.95 (1.85~2.05)	52.73	1.977		
	2460	52.70 (50.07~55.34)	1.96 (1.86~2.06)	52.76	1.984		
ε_r= Relative permittivity, σ= Conductivity							

Table 5:Measured Tissue Parameter

Note: 1）The dielectric parameters of the tissue-equivalent liquid should be measured under similar ambient conditions and within 2 °C of the conditions expected during the SAR evaluation to satisfy protocol requirements.

2） KDB 450824 was ensured to be applied for probe calibration frequencies greater than or equal to 50MHz of the EUT frequencies.

3）The above measured tissue parameters were used in the DASY software to perform interpolation via the DASY software to determine actual dielectric parameters at the test frequencies. The SAR test plots may slightly differ from the table above since the DASY rounds to three significant digits.

4.2 System Check

The system check is performed for verifying the accuracy of the complete measurement system and performance of the software. The system validation is performed with tissue equivalent material according to IEEE P1528 (described above). The following table shows validation results for all frequency bands and tissue liquids used during the tests (Graphic Plot(s) see Appendix A).

System Check	Target SAR (1W) (+/-10%)		Measured SAR (Normalized to 1W)		Liquid Temp.	Test Date
	1-g (mW/g)	10-g (mW/g)	1-g (mW/g)	10-g (mW/g)		
D835V2 Body	9.54 (8.59~10.49)	6.29 (5.66~6.92)	10.44	6.84	21.4°C	2012/8/10
D835V2 Body	9.54 (8.59~10.49)	6.29 (5.66~6.92)	10.12	6.64	21.4°C	2012/8/26
D1900V2 Body	41.40 (37.26~45.54)	21.80 (19.62~23.98)	40.40	20.84	21.4°C	2012/8/25
D2450V2 Body	52.80 (47.52~58.08)	24.50 (22.05~26.95)	49.20	22.44	21.4°C	2012/8/27

Table 6:System Check Results

4.3 Validation Procedure

The validation is performed by using a validation dipole which is positioned parallel to the planar part of the SAM phantom at the reference point. The distance of the dipole to the SAM phantom is determined by a plexiglass spacer. The dipole is connected to the signal source consisting of signal generator and amplifier via a directional coupler, N-connector cable and adaption to SMA. It is fed with a power of 250 mW. To adjust this power a power meter is used. The power sensor is connected to the cable before the validation to measure the power at this point and do adjustments at the signal generator. At the outputs of the directional coupler both return loss as well as forward power are controlled during the validation to make sure that emitted power at the dipole is kept constant. This can also be checked by the power drift measurement after the test (result on plot).
Validation results have to be equal or near the values determined during dipole calibration (target SAR in table above) with the relevant liquids and test system.

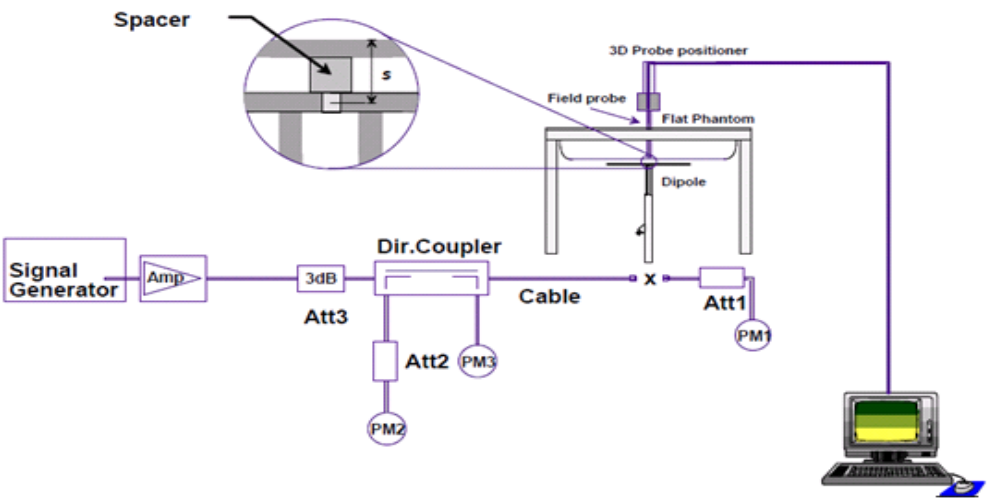

5 Measurement Uncertainty Evaluation

5.1 Measurement uncertainty evaluation for SAR test

The overall combined measurement uncertainty of the measurement system is ± 10.9% (K=1).
The expanded uncertainty (k=2) is assessed to be ± 21.9%
This measurement uncertainty budget is suggested by IEEE P1528 and determined by Schmid & Partner Engineering AG. The breakdown of the individual uncertainties is as follows:

Error Sources	Uncertainty Value	Probability Distribution	Divi-sor	c_i 1g	c_i 10g	Standard Uncertainty 1g	Standard Uncertainty10g	v_i^2 or v_{eff}
Measurement System								
Probe calibration	± 6.0%	Normal	1	1	1	± 6.0%	± 6.0%	∞
Axial isotropy	± 4.7%	Rectangular	√3	0.7	0.7	± 1.9%	± 1.9%	∞
Hemispherical isotropy	± 9.6%	Rectangular	√3	0.7	0.7	± 3.9%	± 3.9%	∞
Spatial resolution	± 0.0%	Rectangular	√3	1	1	± 0.0%	± 0.0%	∞
Boundary effects	± 1.0%	Rectangular	√3	1	1	± 0.6%	± 0.6%	∞
Probe linearity	± 4.7%	Rectangular	√3	1	1	± 2.7%	± 2.7%	∞
System detection limits	± 1.0%	Rectangular	√3	1	1	± 0.6%	± 0.6%	∞
Readout electronics	± 0.3%	Normal	1	1	1	± 0.3%	± 0.3%	∞
Response time	± 0.8%	Rectangular	√3	1	1	± 0.5%	± 0.5%	∞
Integration time	± 2.6%	Rectangular	√3	1	1	± 1.5%	± 1.5%	∞
RF ambient conditions	± 3.0%	Rectangular	√3	1	1	± 1.7%	± 1.7%	∞
Probe positioner	± 0.4%	Rectangular	√3	1	1	± 0.2%	± 0.2%	∞
Probe positioning	± 2.9%	Rectangular	√3	1	1	± 1.7%	± 1.7%	∞
Max. SAR evaluation	± 1.0%	Rectangular	√3	1	1	± 0.6%	± 0.6%	∞
Test Sample Related								
Device positioning	± 2.9%	Normal	1	1	1	± 2.9%	± 2.9%	145
Device holder uncertainty	± 3.6%	Normal	1	1	1	± 3.6%	± 3.6%	5
Power drift	± 5.0%	Rectangular	√3	1	1	± 2.9%	± 2.9%	∞
Phantom and Set-up								
Phantom uncertainty	± 4.0%	Rectangular	√3	1	1	± 2.3%	± 2.3%	∞
Liquid conductivity (target)	± 5.0%	Rectangular	√3	0.64	0.43	± 1.8%	± 1.2%	∞
Liquid conductivity (meas.)	± 2.5%	Normal	1	0.64	0.43	± 1.6%	± 1.1%	∞
Liquid permittivity (target)	± 5.0%	Rectangular	√3	0.6	0.49	± 1.7%	± 1.4%	∞
Liquid permittivity (meas.)	± 2.5%	Normal	1	0.6	0.49	± 1.5%	± 1.2%	∞
Combined Uncertainty	$u_c' = \sqrt{\sum_{i=1}^{21} c_i^2 u_i^2}$					± 10.9%	± 10.7%	387
Expanded Std. Uncertainty	$u_e = 2u_c$	Normal	**K=2**			**± 21.9%**	**± 21.4%**	

Table 7:Measurement uncertainties

5.2 Measurement uncertainty evaluation for system validation

The overall combined measurement uncertainty of the measurement system is ± 9.5% (K=1).
The expanded uncertainty (k=2) is assessed to be ± 18.9%
This measurement uncertainty budget is suggested by IEEE P1528 and determined by Schmid & Partner Engineering AG. The breakdown of the individual uncertainties is as follows:

Error Sources	Uncertainty Value	Probability Distribution	Divi-sor	c_i 1g	c_i 10g	Standard Uncertainty 1g	Standard Uncertainty10g	v_i^2 or v_{eff}
Measurement System								
Probe calibration	± 6.0%	Normal	1	1	1	± 6.0%	± 6.0%	∞
Axial isotropy	± 4.7%	Rectangular	√3	1	1	± 2.7%	± 2.7%	∞
Hemispherical isotropy	± 9.6%	Rectangular	√3	0.7	0.7	± 0.0%	± 0.0%	∞
Boundary effects	± 1.0%	Rectangular	√3	1	1	± 0.6%	± 0.6%	∞
Probe linearity	± 4.7%	Rectangular	√3	1	1	± 2.7%	± 2.7%	∞
System detection limits	± 1.0%	Rectangular	√3	1	1	± 0.6%	± 0.6%	∞
Readout electronics	± 0.3%	Normal	1	1	1	± 0.3%	± 0.3%	∞
Response time	± 0.0%	Rectangular	√3	1	1	± 0.0%	± 0.0%	∞
Integration time	± 0.0%	Rectangular	√3	1	1	± 0.0%	± 0.0%	∞
RF ambient conditions	± 1.0%	Rectangular	√3	1	1	± 0.6%	± 0.6%	∞
Probe positioner	± 0.4%	Rectangular	√3	1	1	± 0.2%	± 0.2%	∞
Probe positioning	± 2.9%	Rectangular	√3	1	1	± 1.7%	± 1.7%	∞
Max. SAR evaluation	± 1.0%	Rectangular	√3	1	1	± 0.6%	± 0.6%	∞
Dipole								
Deviation of experimental dipole	± 5.5%	Rectangular	√3	1	1	± 3.2%	± 3.2%	∞
Dipole axis to liquid distance	± 2.0%	Rectangular	1	1	1	± 1.2%	± 1.2%	∞
Power drift	± 4.7%	Rectangular	√3	1	1	± 2.7%	± 2.7%	∞
Phantom and Set-up								
Phantom uncertainty	± 4.0%	Rectangular	√3	1	1	± 2.3%	± 2.3%	∞
Liquid conductivity (target)	± 5.0%	Rectangular	√3	0.64	0.43	± 1.8%	± 1.2%	∞
Liquid conductivity (meas.)	± 2.5%	Normal	1	0.64	0.43	± 1.6%	± 1.1%	∞
Liquid permittivity (target)	± 5.0%	Rectangular	√3	0.6	0.49	± 1.7%	± 1.4%	∞
Liquid permittivity (meas.)	± 2.5%	Normal	1	0.6	0.49	± 1.5%	± 1.2%	∞
Combined Uncertainty	$u_c' = \sqrt{\sum_{i=1}^{21} c_i^2 u_i^2}$					**± 9.5%**	**± 9.2%**	
Expanded Std. Uncertainty	$u_e = 2u_c$	Normal	**K=2**			**± 18.9%**	**± 18.4%**	

Table 8:Measurement uncertainties

6 SAR Test Configuration

6.1 GSM Test Configuration

SAR tests for GSM1900, a communication link is set up with a base station by air link. The tests in the band of GSM1900 are performed in the mode of GPRS/EGPRS function. Since the GPRS class is 12 for this EUT, it has at most 4 timeslots in uplink and at most 4 timeslots in downlink, the maximum total timeslot is 5. The EGPRS class is 12 for this EUT, it has at most 4 timeslots in uplink, and at most 4 timeslots in downlink, the maximum total timeslot is 5.

When SAR tests for EGPRS mode is necessary, GMSK modulation should be used to minimize SAR measurement error due to higher peak-to-average power (PAR) ratios inherent in 8-PSK.

According to specification 3GPP TS 51.010, the maximum power of the GSM can do the power reduction for the multi-slot.

The allowed power reduction in the multi-slot configuration is as following:

Number of timeslots in uplink assignment		Reduction of maximum output power, (dB)		
Band	Time Slots	GPRS (GMSK）	EGPRS (GMSK)	EGPRS (8PSK)
GSM1900	1 TX slot	0	0	0
	2 TX slots	3	3	2
	3 TX slots	4	4	4
	4 TX slots	5.5	5.5	6

Table 9: The allowed power reduction in the multi-slot configuration of GSM

6.2 UMTS Test Configuration

1) RMC

As the SAR hotspot mode tests for UMTS Band V/Band II, we established the radio link through call processing. The maximum output power were verified on high, middle and low channels for each test band according to 3GPP TS 34.121 with the following configuration:

1) 12.2kbps RMC, 64,144,384 kbps RMC with TPC set to 'all 1'.
2) Test loop Mode 1.

For the output power, the configurations for the DPCCH and $DPDCH_1$ are as followed (EUT do not support the $DPDCH_{2-n}$)

	Channel Bit Rate (kbps)	Channel Symbol Rate (ksps)	Spreading Factor	Spreading Code Number	Bits/Slot
DPCCH	15	15	256	0	10
$DPDCH_1$	15	15	256	64	10
	30	30	128	32	20
	60	60	64	16	40
	120	120	32	8	80
	240	240	16	4	160
	480	480	8	2	320
	960	960	4	1	640
$DPDCH_n$	960	960	4	1, 2, 3	640

SAR for hotspot mode exposure configurations is measured using the 12.2 kbps RMC with the TPC bits configured to all "1s". SAR for other spreading codes and multiple DPDCHn, when supported by the EUT, are not required when the maximum average outputs of each RF channel, for each spreading code and DPDCHn configuration, are less than ¼ dB higher than those measured in 12.2 kbps RMC.

2) HSDPA

SAR for hotspot mode exposure configurations is measured according to the "Body SAR Measurements'' procedures of 3G device. In addition, hotspot mode SAR is also measured for HSDPA when the maximum average outputs of each RF channel with HSDPA active is at ¼ dB higher than that measured without HSDPA using 12.2kbps RMC or the maximum SAR 12.2kbps RMC is above 75% of the SAR limit. Hotspot mode SAR for HSDPA is measured using an FRC with H-Set 1 in Sub-test 1 and a 12.2kbps RMC configured in Test Loop Mode 1, using the highest hotspot mode SAR configuration in 12.2 kbps RMC without HSDPA.

HSDPA should be configured according to UE category of a test device. The number of HS-DSCH/HS-PDSCHs, HAPRQ processes, minimum inter-TTI interval, transport block sizes and RV coding sequence are defined by the H-set. To maintain a consistent test configuration and stable transmission condition, QPSK is used in the H-set for SAR testing. HS-DPCCH should be configured with a CQI feedback cycle of 4ms with a CQI repetition factor of 2 to maintain a constant rate of active CQI slots. The β_c and β_d gain factors for DPCCH and DPDCH were set according to the values in the below table, β_{hs} for HS-DPCCH is set automatically to the correct value when ΔACK, ΔNACK, ΔCQI = 8. The variation of the β_c /β_d ratio causes a power reduction at sub-tests 2 - 4.

Sub-test	β_c	β_d	β_d (SF)	β_c/β_d	β_{hs} (1)	CM(dB)(2)	MPR (dB)
1	2/15	15/15	64	2/15	4/15	0.0	0
2	12/15(3)	15/15(3)	64	12/15(3)	24/15	1.0	0
3	15/15	8/15	64	15/8	30/15	1.5	0.5
4	15/15	4/15	64	15/4	30/15	1.5	0.5

Note 1: ΔACK, ΔNACK and ΔCQI = 8 $A_{hs} = \beta_{hs}/\beta_c = 30/15$ $\beta_{hs} = 30/15 * \beta_c$

Note 2 : CM=1 for β_c/β_d= 12/15, β_{hs}/β_c = 24/15. For all other combinations of DPDCH,DPCCH and HS-DPCCH the MPR is based on the relative CM difference. This is applicable for only UEs that support HSDPA in release 6 and later releases.

Note 3 : For subtest 2 the β_c/β_d ratio of 12/15 for the TFC during the measurement period (TF1, TF0) is achieved by setting the signalled gain factors for the reference TFC (TF1,TF1) to β_c = 11/15 and β_d = 15/15

Table 10: Sub-tests for UMTS Release 5 HSDPA

The measurements were performed with a Fixed Reference Channel (FRC) and H-Set 1 QPSK.

Parameter	Value
Nominal average inf. bit rate	534 kbit/s
Inter-TTI Distance	3 TTI's
Number of HARQ Processes	2 Processes
Information Bit Payload	3202 Bits
MAC-d PDU size	336 Bits
Number Code Blocks	1 Block
Binary Channel Bits Per TTI	4800 Bits
Total Available SMLs in UE	19200 SMLs
Number of SMLs per HARQ Process	9600 SMLs
Coding Rate	0.67
Number of Physical Channel Codes	5

Table 11:settings of required H-Set 1 QPSK acc. to 3GPP 34.121

HS-DSCH Category	Maximum HS-DSCH Codes Received	Minimum Inter-TTI Interval	Maximum HS-DSCH Transport Block Bits/HS-DSCH TTI	Total Soft Channel Bits
1	5	3	7298	19200
2	5	3	7298	28800
3	5	2	7298	28800
4	5	2	7298	38400
5	5	1	7298	57600
6	5	1	7298	67200
7	10	1	14411	115200
8	10	1	14411	134400
9	15	1	25251	172800
10	15	1	27952	172800
11	5	2	3630	14400
12	5	1	3630	28800
13	15	1	34800	259200
14	15	1	42196	259200
15	15	1	23370	345600
16	15	1	27952	345600

Table 12:HSDPA UE category

3) HSUPA

Hotspot mode SAR is also measured for HSDPA when the maximum average outputs of each RF channel with HSDPA active is at ¼ dB higher than that measured without HSDPA using 12.2kbps RMC or the maximum SAR 12.2kbps RMC is above 75% of the SAR limit. Hotspot mode SAR for HSPA is measured with E-DCH Sub-test 5, using H-set 1 and QPSK for FRC and 12.2kbps RMC configured in Test Loop Mode 1 with power control algorithm 2, according to the highest hotspot mode SAR configuration in 12.2 kbps RMC without HSPA.

Due to inner loop power control requirements in HSDPA, a commercial communication test set should be used for the output power and SAR tests. The 12.2 kbps RMC, FRC H-set 1 and E-DCH configurations for HSDPA should be configured according to the values indicated below as well as other applicable procedures described in the 'UMTS Handset' and 'Release 5 HSDPA Data Device' sections of 3G device.

Sub-test	β_c	β_d	β_d (SF)	β_c/β_d	β_{hs}(1)	β_{ec}	β_{ed}	β_{ec} (SF)	β_{ed} (code)	CM(2) (dB)	MPR (dB)	AG(4) Index	E-TFCI
1	11/15(3)	15/15(3)	64	11/15(3)	22/15	209/225	1039/225	4	1	1.0	0.0	20	75
2	6/15	15/15	64	6/15	12/15	12/15	94/75	4	1	3.0	2.0	12	67
3	15/15	9/15	64	15/9	30/15	30/15	β_{ed1}:47/15 β_{ed2}:47/15	4	2	2.0	1.0	15	92
4	2/15	15/15	64	2/15	4/15	2/15	56/75	4	1	3.0	2.0	17	71
5	15/15(4)	15/15(4)	64	15/15(4)	30/15	24/15	134/15	4	1	1.0	0.0	21	81

Note 1: Δ ACK, Δ NACK and Δ CQI = 8 $A_{hs} = \beta_{hs}/\beta_c = 30/15$ $\beta_{hs} = 30/15 * \beta_c$

Note 2: CM = 1 for $\beta_c/\beta_d = 12/15$, $\beta_{hs}/\beta_c = 24/15$. For all other combinations of DPDCH, DPCCH, HS-DPCCH, E-DPDCH and E-DPCCH the MPR is based on the relative CM difference

Note 3 : For subtest 1 the β_c/β_d ratio of 11/15 for the TFC during the measurement period (TF1, TF0) is achieved by setting the signalled gain factors for the reference TFC (TF1,TF1) to $\beta_c = 10/15$ and $\beta_d = 15/15$

Note 4 : For subtest 5 the β_c/β_d ratio of 15/15 for the TFC during the measurement period (TF1, TF0) is achieved by setting the signalled gain factors for the reference TFC (TF1,TF1) to $\beta_c = 14/15$ and $\beta_d = 15/15$

Note 5 : Testing UE using E-DPDCH Physical Layer category 1 Sub-test 3 is not required according to TS 25.306 Table 5.1g

Note 6: β_{ed} can not be set directly; it is set by Absolute Grant Value.

Table 13:Subtests for UMTS Release 6 HSUPA

UE E-DCH Category	Maximum E-DCH Codes Transmitted	Number of HARQ Processes	E-DCH TTI(ms)	Minimum Speading Factor	Maximum E-DCH Transport Block Bits	Max Rate (Mbps)
1	1	4	10	4	7110	0.7296
2	2	8	2	4	2798	1.4592
	2	4	10	4	14484	
3	2	4	10	4	14484	1.4592
4	2	8	2	2	5772	2.9185
	2	4	10	2	20000	2.00
5	2	4	10	2	20000	2.00
6 (No DPDCH)	4	8	10	2SF2&2SF4	11484	5.76
	4	4	2		20000	2.00
7 (No DPDCH)	4	8	2	2SF2&2SF4	22996	?
	4	4	10		20000	?
NOTE: When 4 codes are transmitted in parallel, two codes shall be transmitted with SF2 and two with SF4.UE categories 1 to 6 support QPSK only.UE category 7 supports QPSK.(TS25.306-7.3.0).						

Table 14:HSUPA UE category

4) DC-HSDPA

In DC-HSDPA implementation of this device, the uplink parameters are the same as HSDPA. No additional channels and modulations (16 QAM, and 64 QAM) are supported in uplink. The difference is only in the downlink parameters, where two carriers are supported. HSDPA settings were used on uplink.

For Rel. 8 DC-HSDPA apply the four subtests from HSDPA Release 5 except use fixed reference channel H-Set 12 for DC-HSDPA. And we can apply the same SAR test exclusion criteria used for Rel. 6 HSPA for Rel. 7 HSPA+ and Rel. 8 DC-HSDPA. That is, if the HSPA, HSPA+, or the DC-HSDPA maximum output is not more than 0.25 dB higher than WCDMA, SAR measurement for those modes is not required.
The following tests were completed according to procedures in section 7.3.13 of 3GPP TS34.108 v9.5.0. A summary of these settings are illustrated below:

Downlink Physical Channels are set as per 3GPP TS34.121-1 v9.0.0 E.5.0

Table E.5.0: Levels for HSDPA connection setup

Parameter During Connection setup	Unit	Value
P-CPICH_Ec/Ior	dB	-10
P-CCPCH and SCH_Ec/Ior	dB	-12
PICH _Ec/Ior	dB	-15
HS-PDSCH	dB	off
HS-SCCH_1	dB	off
DPCH_Ec/Ior	dB	-5
OCNS_Ec/Ior	dB	-3.1

Call is set up as per 3GPP TS34.108 v9.5.0 sub clause 7.3.13
The configurations of the fixed reference channels for HSDPA RF tests are described in 3GPP TS 34.121, annex C for FDD and 3GPP TS 34.122.

The measurements were performed with a Fixed Reference Channel (FRC) H-Set 12 with QPSK

Parameter	Value
Nominal average inf. bit rate	60 kbit/s
Inter-TTI Distance	1 TTI's
Number of HARQ Processes	6 Processes
Information Bit Payload	120 Bits
Number Code Blocks	1 Block
Binary Channel Bits Per TTI	960 Bits
Total Available SMLs in UE	19200 SMLs
Number of SMLs per HARQ Process	3200 SMLs
Coding Rate	0.15
Number of Physical Channel Codes	1

Table 15:settings of required H-Set 12 QPSK acc. to 3GPP 34.121

Note:

1.The RMC is intended to be used for DC-HSDPA mode and both cells shall transmit with identical parameters as listed in the table above.

2.Maximum number of transmission is limited to 1,i.e.,retransmission is not allowed. The redundancy and constellation version 0 shall be used.

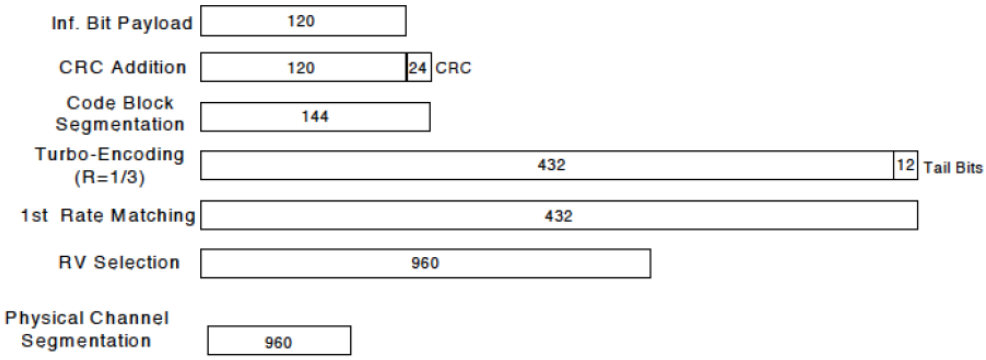

Figure C.8.19: Coding rate for Fixed reference Channel H-Set 12 (QPSK)

The following 4 Sub-tests for HSDPA were completed according to Release 5 procedures. A summary of subtest settings are illustrated below:

Sub-test	β_c	β_d	β_d (SF)	β_c/β_d	β_{hs} (1)	CM(dB)(2)	MPR (dB)
1	2/15	15/15	64	2/15	4/15	0.0	0
2	12/15(3)	15/15(3)	64	12/15(3)	24/15	1.0	0
3	15/15	8/15	64	15/8	30/15	1.5	0.5
4	15/15	4/15	64	15/4	30/15	1.5	0.5

Note 1: Δ ACK, Δ NACK and Δ CQI = 8 $A_{hs} = \beta_{hs}/\beta_c = 30/15$ $\beta_{hs} = 30/15 * \beta_c$

Note 2: CM=1 for β_c/β_d= 12/15, β_{hs}/β_c = 24/15. For all other combinations of DPDCH,DPCCH and HS-DPCCH the MPR is based on the relative CM difference. This is applicable for only UEs that support HSDPA in release 6 and later releases.

Note 3: For subtest 2 the β_c/β_d ratio of 12/15 for the TFC during the measurement period (TF1, TF0) is achieved by setting the signalled gain factors for the reference TFC (TF1,TF1) to β_c = 11/15 and β_d = 15/15

Up commands are set continuously to set the UE to Max power.

Note:

1.The Dual Carriers transmission only applies to HSDPA physical channels

2.The Dual Carriers belong to the same Node and are on adjacent carriers.

3.The Dual Carriers do not support MIMO to serve UEs configured for dual cell operation

4.The Dual Carriers operate in the same frequency band .

5.The device doesn't support the modulation of 16QAM in uplink but 64QAM in downlink for DC-HSDPA mode.

6.The device doesn't support carrier aggregation for it just can operate in Release 8.

6.3 CDMA 1x EVDO Releas A Test Configurations

1) Output Power Verification for EVDO

Maximum output power is verified on the High, Middle, Low channel according to procedures in section 3.1.1.3.4 of3GPP2 C.S0033-0TIA-866 for Rev.0 and section 4.3.4 of 3GPP2 C.S0033-A for Rev. A, maximum output power for both Subtype 0/1 and Subtype 2 Physical Layer configurations should be measured.

2) SAR measurement

SAR is measured using FTAP/RTAP and FETA/RETA respectively for Rev.0 and Rev. A devices.
The AT is tested with a Reverse Data Channel rate of 153.6kbps IN Subtype 0/1 Physical Layer configuration; and a Reverse Data Channel payload size of 4096 bits and Termination Target of 16 slot in Subtype 2 Physical Layer configurations. Both FTAP and FETAP are configured with a Forward Traffic Channel data rate corresponding to the 2-slot version of 307.2kbps with the ACK channel transmitting in all slots. AT power control should be in “All Bits Up” conditions for TAP/ETAP.

Hotspot mode SAR is measured using Subtype 0/1 Physical Layer configurations for Rev.0. SAR for Subtype 2 Physical Layer configurations is not required for Rev. A when the maximum average output of each RF channel is less that measured in Subtype 0/1 Physical Layer configurations. Otherwise, SAR is measured on the maximum output channel for Rev. A using the exposure configuration that results in the highest SAR for that RF channels in Rev.014.

3) 1xRTT support

For EVDO devices that also support 1x RTT voice and/or data operations, SAR is not required for 1x RTT when the maximum average output of each channel is less than 1/4 dB higher than that measured in Subtype 0/1 Physical Layer configurations for Rev.0. Otherwise, the ‘Hotspot mode SAR Measurements’ procedures in the ‘CDMA-2000 1x Handsets’ section should be applied.

6.4 CDMA 1x EVDO Releas B Test Configurations

1) Connection Diagram

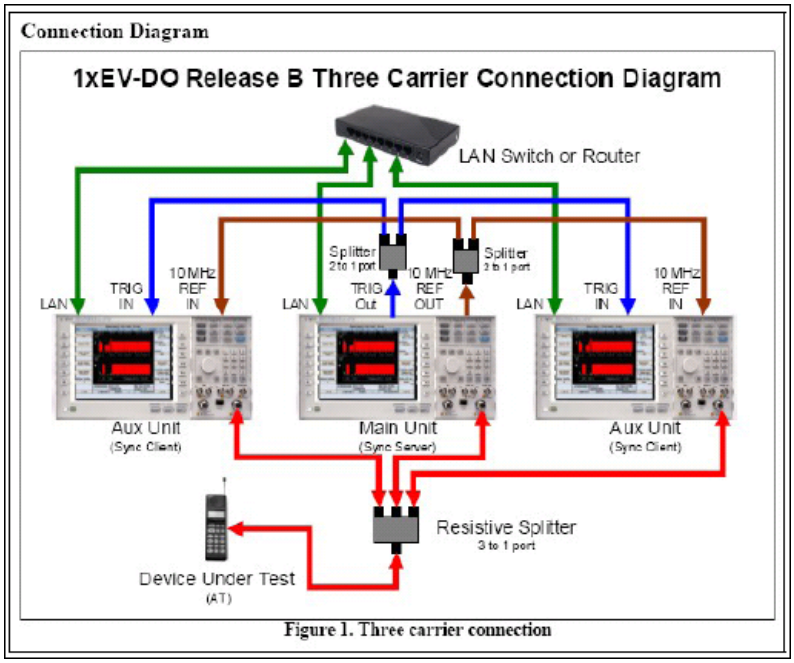

2) Output Power Verification for EVDO

Test parameter setup for maximum RF output power according to C.S033-B_v1.0 of 3GPP2:

a. Set up Test Application session for Subtype3 Physical Layer.Configure the Test Application RMCTAP so that the Reverse Data Channel payload size corresponds to 4096 bits with Temination Target of 4 sub-packets. Configure the Test Application FMCTAP(for Subtype3 Physical Layer) so that the Forward Traffic Channel data rate corresponds to the 2slot version of 307.2kbps,and the ACK Channel is transmitted at all the carriers.
b. Set or Ior to -85dBm/1.23MHz for each of the carriers.
c. Set Power control bits to “All up bits’.

3) SAR measurement

SAR is measured using FMCTAP/RMCTAP for Rev.B device.The AT is tested with a Reverse Data Channel payload size of 4096 bits in Subtype3 Physical Layer configuration.Both FTAP and FETAP are configured with a Forward Traffic Channel data rate corresponding to the 4-slot version of 307.2kbps with the ACK Channel transmitting in all slots.AT power control should be in “All Bits Up”.

We do the SAR test in 1xEVDO mode following the procedures below:

1) Test 1 channel operation in Rev.0 and Rev.A mode following policies and procedures;
2) For both 2 and 3 channel operation in Rev.B mode, perform SAR tests on the middle channel settings. If measurement results are higher than 1.2 W/kg, repeat tests for the upper and lower channels.

6.5 CDMA 1xRTT Test Configurations

1) Output power verification

For SAR test, the maximum power output is very important and essential; it is identical under the measurement uncertainty. It is proper to use typical Test Mode 3(FW RC3, RVS RC3, SO55) as the worst case for SAR test.

Test Parameter setup for maximum RF output power according to section 4.4.5 of 3GPP2;

Parameter	Units	Value
I or	dBm/1.23MHz	-104
PilotE c/I or	dB	-7
TrafficE c /I or	dB	-7.4

2) Hotspot mode SAR measurement

SAR is measured in RC3 with the EUT configured to transmit at full rate using TDSO/SO32 transmit at full rate on FCH with all other code channels disabled. SAR for multiple code channels (FCH+SCHn) is not required when the maximum average output of each RF channel is less than 0.25dB higher than measured with FCH only.

Hotspot mode SAR in RC1 is not requires because the maximum average output of each channel is less than 0.25dB higher than that measured in RC3. Otherwise, SAR is measured on the maximum output channel in RC1; with Loopback Service Option SO55, at full rate using the hotspot mode exposure configuration that results in the highest SAR for that channel in RC3.

Communication standard between mobile station and base station simulator	3GPP2 C.S0011-B
Radio configuration	RC3(Supporting CDMA 1X)
Spreading Rate	SR1
Data Rate	9600bps
Service Options	SO55(Test Loopback mode1)
Service Options	SO32(Test Data service mode)
Multiplex Options	The mobile station does not support this service

6.6 WiFi Test Configuration

For the 802.11b/g SAR tests, a communication link is set up with the test mode software for WiFi mode test. The Absolute Radio Frequency Channel Number(ARFCN) is allocated to 1 ,6 and 11 respectively in the case of 2450 MHz.During the test,at the each test frequency channel, the EUT is operated at the RF continuous emission mode. Each channel should be tested at the lowest data rate.

802.11b/g operating modes are tested independently according to the service requirements in each frquency band. 802.11b/g modes are tested on channel 1, 6, 11; however,if output power reduction is necessary for channels 1 and/or 11 to meet restricted band requirements the highest output channel closest to each of these channels must be tested instead.

SAR is not required for 802.11g/n channels when the maximum average output power is less than 0.25dB higher than that measured on the corresponding 802.11b channels.

Mode	Band	GHz	Channel	"Default Test Channels"	
				802.11b	802.11g
802.11b/g	2.4 GHz	2.412	1#	√	△
		2.437	6	√	△
		2.462	11#	√	△

Notes:
√ = "default test channels"
△= possible 802.11g channels with maximum average output ¼ dB the "default test channels"
= when output power is reduced for channel 1 and /or 11 to meet restricted band requirements the highest output channels closest to each of these channels should be tested.

802.11 Test Channels per FCC Requirements

7 SAR Measurement Results

7.1 Conducted power measurements

For the measurements a Rohde & Schwarz Radio Communication Tester CMU 200 and 3 Aglient Universal Radio Communication Tester E5515C was used.
SAR drift measured at the same position in liquid before and after each SAR test as below 7.2 chapter.
Note: CMU200 measures GSM peak and average output power for active timeslots.For SAR the timebased average power is relevant. The difference in between depends on the duty cycle of the TDMA signal :

No. of timeslots	**1**	**2**	**3**	**4**
Duty Cycle	1:8	1:4	1:2.66	1:2
timebased avg. power compared to slotted avg. power	-9dB	-6dB	-4.25dB	-3dB

The signalling modes differ as follows:

mode	**coding scheme**	**modulation**
GPRS	CS1 to CS4	GMSK
EDGE	MCS1 to MCS4	GMSK
EDGE	MCS5 to MCS9	8PSK

Apart from modulation change (GMSK/8PSK) coding schemes differ in code rate without influence on the RF signal. Therefore one coding scheme per mode was selected for conducted power measurements.

7.1.1 Conducted power measurements GSM1900

GSM1900		Burst-Averaged output Power (dBm)			Division Factors	Frame-Averaged output Power (dBm)		
		512CH	661CH	810CH		512CH	661CH	810CH
GPRS (GMSK)	1 Tx Slot	29.83	**29.86**	29.81	-9	20.83	20.86	20.81
	2 Tx Slots	26.64	26.66	26.61	-6	20.64	20.66	20.61
	3 Tx Slots	25.51	25.57	25.53	-4.25	21.26	21.32	21.28
	4 Tx Slots	23.37	23.40	23.37	-3	20.37	20.40	20.37
EDGE (GMSK)	1 Tx Slot	29.81	29.83	29.82	-9	20.81	20.83	20.82
	2 Tx Slots	26.61	26.61	26.59	-6	20.61	20.61	20.59
	3 Tx Slots	25.48	25.53	25.51	-4.25	21.23	21.28	21.26
	4 Tx Slots	23.34	23.41	23.38	-3	20.34	20.41	20.38
EDGE (8PSK)	1 Tx Slot	25.93	25.86	25.88	-9	16.93	16.86	16.88
	2 Tx Slots	23.56	23.60	23.60	-6	17.56	17.60	17.60
	3 Tx Slots	21.92	21.86	21.96	-4.25	17.67	17.61	17.71
	4 Tx Slots	19.95	19.90	20.00	-3	16.95	16.90	17.00

Table 16:Test results conducted power measurement GSM 1900MHz

Note: 1. The conducted power of GSM1900 is measured with RMS detector.

2. Frame-averaged output power was calculated from the measured burst-averaged output power by converting the slot powers into linear units and calculating the energy over 8 timesolts.

7.1.2 Conducted power measurements UMTS Band V

UMTS850 (Band V)		Average Power (dBm)		
		4132CH	4182CH	4233CH
WCDMA	12.2kbps RMC	**22.22**	21.88	21.75
	64kbps RMC	22.16	21.86	21.72
	144kbps RMC	22.19	21.81	21.68
	384kbps RMC	22.20	21.82	21.68
HSDPA	Subtest 1	21.93	21.64	21.58
	Subtest 2	21.86	21.62	21.47
	Subtest 3	21.36	21.01	20.97
	Subtest 4	21.30	20.98	20.93
HSUPA	Subtest 1	21.42	21.40	21.12
	Subtest 2	20.72	20.28	20.30
	Subtest 3	20.56	20.35	20.41
	Subtest 4	20.66	21.31	20.24
	Subtest 5	21.38	21.36	21.06
DC-HSDPA	Subtest 1	21.88	21.76	21.64
	Subtest 2	21.83	21.78	21.57
	Subtest 3	21.32	21.17	21.11
	Subtest 4	21.38	21.08	21.12

Table 17:Test results conducted power measurement UMTS Band V

Note: The conducted power of UMTS Band V is measured with RMS detector.

7.1.3 Conducted power measurements UMTS Band II

UMTS1900 (Band II)		Average Power (dBm)		
		9262CH	9400CH	9538CH
WCDMA	12.2kbps RMC	22.57	**22.72**	22.39
	64kbps RMC	22.48	22.70	22.33
	144kbps RMC	22.55	22.67	22.32
	384kbps RMC	22.50	22.64	22.33
HSDPA	Subtest 1	22.38	22.44	22.27
	Subtest 2	22.31	22.46	22.34
	Subtest 3	21.98	21.95	21.86
	Subtest 4	21.93	21.89	21.77
HSUPA	Subtest 1	21.77	22.05	21.86
	Subtest 2	20.61	20.46	20.42
	Subtest 3	21.21	21.07	20.95
	Subtest 4	20.67	20.34	20.37
	Subtest 5	21.81	22.01	21.83
DC-HSDPA	Subtest 1	22.35	22.36	22.11
	Subtest 2	22.25	22.37	22.19
	Subtest 3	21.86	21.82	21.71
	Subtest 4	21.81	21.87	21.61

Table 18:Test results conducted power measurement UMTS Band II

Note: The conducted power of UMTS Band II is measured with RMS detector.

7.1.4 Conducted power measurements CDMA BC0

CDMA BC0（1xRTT）		Conducted Power (dBm)		
		1013CH	384CH	777CH
RC1	SO55	23.96	23.69	23.45
RC3	SO55	23.95	23.73	23.49
	TDSO32（FCH）	23.94	23.72	23.47
	TDSO32（FCH+SCH	23.89	23.68	23.45
CDMA BC0 (1xEV-DO)		Conducted Power (dBm)		
		1013CH	384CH	777CH
Rev 0	RTAP 153.6	23.89	23.81	23.57
Rev A	RETAP 4096	23.85	23.64	23.55

Rev.B	Double carriers	Conducted Power (dBm)		
		1013/31	384/425	736/777
		21.07	21.37	21.23
	Three carriers	Conducted Power (dBm)		
		1013/31/72	343/384/425	695/736/777
		19.06	18.98	18.71

Table 19:Test results conducted power measurement CDMA 800MHz

Note: The conducted power of CDMA BC0 is measured with RMS detector.

7.2 SAR measurement Result

7.2.1 SAR measurement Result of GSM1900

Test Position of Body with 10mm	Test channel /Frequency	Test Mode	SAR Value (W/kg)		Power Drift (dB)	Conducted Power (dBm)	Liquid Temp.
			1-g	10-g			
Front Side	661/1880	GPRS 1TS	0.551	0.289	0.030	29.86	21.4°C
		GPRS 2TS	0.496	0.260	0.100	26.66	21.4°C
		GPRS 3TS	0.561	0.293	-0.110	25.57	21.4°C
		GPRS 4TS	0.483	0.253	0.000	23.40	21.4°C
Rear Side	661/1880	GPRS 3TS	0.420	0.223	0.070	25.57	21.4°C
Right Side			0.630	0.324	-0.040		21.4°C
Top Side			0.098	0.060	0.160		21.4°C
Bottom Side			0.146	0.088	0.000		21.4°C
Right Side	661/1880	EDGE 1TS	**0.666**	0.340	0.150	29.83	21.4°C
		EDGE 2TS	0.597	0.305	0.110	26.61	21.4°C
		EDGE 3TS	0.663	0.340	0.150	25.53	21.4°C
		EDGE 4TS	0.528	0.271	0.120	23.41	21.4°C

Table 20:Test results Hotspot mode SAR GSM1900

Note: 1) The maximum SAR value of each test band is shown in **bold** letters.

2) Per KDB447498 D01,the SAR test shall be performed at the high, middle and low frequency channels of each operating mode. If the SAR measured at mid-band channel for each test configuration is at least 3.0 dB lower than the SAR limit (< 0.8 W/kg), testing at the high and low channels is optional.

3) Per KDB941225 D06,for the antenna-to-edge distance is greater than 2.5 cm,so the left side does not need to be tested.

7.2.2 SAR measurement Result of UMTS Band V

Test Position of Body with 10mm	Test channel /Frequency	Test Mode	SAR Value (W/kg)		Power Drift (dB)	Conducted Power (dBm)	Liquid Temp.
			1-g	10-g			
Front Side	4182/836.4	RMC	**0.732**	0.524	-0.180	21.88	21.4°C
Rear Side			0.682	0.487	0.000		21.4°C
Right Side			0.070	0.044	-0.020		21.4°C
Top Side			0.368	0.257	-0.030		21.4°C
Bottom Side			0.381	0.262	0.070		21.4°C

Table 21:Test results Hotspot mode SAR UMTS Band V

Note: 1) The maximum SAR value of each test band is shown in **bold** letters.

2) Per KDB447498 D01,the SAR test shall be performed at the high, middle and low frequency channels of each operating mode. If the SAR measured at mid-band channel for each test configuration is at least 3.0 dB lower than the SAR limit (< 0.8 W/kg), testing at the high and low channels is optional.

3) Per KDB941225 D06,for the antenna-to-edge distance is greater than 2.5 cm,so the left side does not need to be tested.

4) Per KDB941225 D01,Body SAR is not required for HSPA when the maximum average output power of HSPA active is less than 0.25dBm higher than that measured without HSPA using 12.2kbps RMC and the maximum SAR 12.2kbps RMC is less than 75% of the SAR limit.

5) If the the DC-HSDPA maximum output is not more than 0.25 dB higher than WCDMA, SAR measurement for this mode is not required.

7.2.3 SAR measurement Result of UMTS Band II

Test Position of Body with 10mm	Test channel /Frequency	Test Mode	SAR Value (W/kg)		Power Drift (dB)	Conducted Power (dBm)	Liquid Temp.
			1-g	10-g			
Front Side	9538/1907.6	RMC	0.825	0.424	0.150	22.39	21.4°C
	9400/1880		0.886	0.459	0.020	22.72	21.4°C
	9262/1852.4		0.651	0.340	0.100	22.57	21.4°C
Rear Side	9400/1880	RMC	0.606	0.346	0.090	22.72	21.4°C
Right Side	9538/1907.6	RMC	**0.995**	0.507	-0.150	22.39	21.4°C
	9400/1880		0.849	0.437	-0.050	22.72	21.4°C
	9262/1852.4		0.606	0.311	-0.030	22.57	21.4°C
Top Side	9400/1880	RMC	0.155	0.101	-0.110	22.72	21.4°C
Bottom Side			0.200	0.125	-0.050		21.4°C

Table 22:Test results Hotspot mode SAR UMTS Band II

Note: 1) The maximum SAR value of each test band is shown in **bold** letters.

2) Per KDB447498 D01,the SAR test shall be performed at the high, middle and low frequency channels of each operating mode. If the SAR measured at mid-band channel for each test configuration is at least 3.0 dB lower than the SAR limit (< 0.8 W/kg), testing at the high and low channels is optional.

3) Per KDB941225 D06,for the antenna-to-edge distance is greater than 2.5 cm,so the left side does not need to be tested.

4) Per KDB941225 D01,Body SAR is not required for HSPA when the maximum average output power of HSPA active is less than 0.25dBm higher than that measured without HSPA using 12.2kbps RMC and the maximum SAR 12.2kbps RMC is less than 75% of the SAR limit.

5) If the the DC-HSDPA maximum output is not more than 0.25 dB higher than WCDMA, SAR measurement for this mode is not required.

7.2.4 SAR measurement Result of CDMA BC0

Test Position of Body with 10mm	Test channel /Frequency	Test Mode	SAR Value (W/kg)		Power Drift (dB)	Conducted Power (dBm)	Liquid Temp.
			1-g	10-g			
Front Side	384/836.52	EVDO Rev.0	**0.732**	0.525	0.010	23.81	21.4°C
Rear Side			0.670	0.481	0.050		21.4°C
Right Side			0.069	0.045	0.000		21.4°C
Top Side			0.384	0.270	-0.020		21.4°C
Bottom Side			0.409	0.283	-0.030		21.4°C
Front Side	384/836.52	EVDO Rev.A	0.724	0.516	-0.090	23.64	21.4°C
		CDMA 1xRTT	0.691	0.489	0.150	23.72	21.4°C
Front Side	384/836.52	EVDO Rev.B Double carriers	0.312	0.207	0.060	21.37	21.4°C
		EVDO Rev.B Three carriers	0.380	0.270	-0.010	18.98	21.4°C

Table 23:Test results Hotspot mode SAR CDMA 800MHz

Note: 1) The maximum SAR value of each test band is shown in **bold** letters.

2) Per KDB447498 D01,the SAR test shall be performed at the high, middle and low frequency channels of each operating mode. If the SAR measured at mid-band channel for each test configuration is at least 3.0 dB lower than the SAR limit (< 0.8 W/kg), testing at the high and low channels is optional.

3) Per KDB941225 D06,for the antenna-to-edge distance is greater than 2.5 cm,so the left side does not need to be tested.

4) 1 channel can only be operated under EVDO Rev.0 & Rev.A mode.

5) For both 2 and 3 channel operation, perform SAR tests on the middle channel settings. If measurement results are higher than 1.2 W/kg, repeat tests for the upper and lower channels. It is only available to EVDO Rev.B.

7.2.5 SAR measurement Result of WiFi

Test Position of Body with 10mm	Test channel /Frequency	Test Mode	SAR Value (W/kg)		Power Drift (dB)	Conducted Power (dBm)	Liquid Temp.
			1-g	10-g			
Front Side	1/2422	802.11b	**0.142**	0.070	0.060	13.22	21.4°C
Rear Side	1/2422	802.11b	0.026	0.017	0.080	13.22	21.4°C
Top Side	1/2422	802.11b	0.089	0.048	0.160	13.22	21.4°C

Table 24: Test results Hotspot mode SAR WiFi 2450MHz

Note: 1) The maximum SAR value of each test band is shown in **bold** letters.

2) Per KDB447498 D01,the SAR test shall be performed at the high, middle and low frequency channels of each operating mode. If the SAR measured at mid-band channel for each test configuration is at least 3.0 dB lower than the SAR limit (< 0.8 W/kg), testing at the high and low channels is optional.

3) Per KDB941225 D06,for the antenna-to-edge distance is greater than 2.5 cm,so the left,right and bottom sides do not need to be tested.

7.3 Multiple Transmitter Evaluation

These procedures were followed according to FCC "KDB648474 D01 SAR Handsets Multi Xmiter and Ant, v01r05", Sept 2008. The procedures are applicable to phones with built-in unlicensed transmitters, such as 802.11 a/b/g and Bluetooth devices.

	2.45	5.15 - 5.35	5.47 - 5.85	GHz
P_{Ref}	12	6	5	mW
Device output power should be rounded to the nearest mW to compare with values specified in this table.				

Table 25: Output Power Thresholds for Unlicensed Transmitters

	Individual Transmitter	Simultaneous Transmission
Licensed Transmitters	Routine evaluation required	SAR not required: Unlicensed only ○ when stand-alone 1-g SAR is not required and antenna is ≥ 5 cm from other antennas Licensed & Unlicensed ○ when the sum of the 1-g SAR is < 1.6 W/kg for all simultaneous transmitting antennas ○ when SAR to peak location separation ratio of simultaneous transmitting antenna pair is < 0.3 SAR required: Licensed & Unlicensed antenna pairs with SAR to peak location separation ratio ≥ 0.3; test is only required for the configuration that results in the highest SAR in stand-alone configuration for each wireless mode and exposure condition Note: simultaneous transmission exposure conditions for head and body can be different for different style phones; therefore, different test requirements may apply
Unlicensed Transmitters	When there is no simultaneous transmission – ○ output ≤ 60/f: SAR not required ○ output > 60/f: stand-alone SAR required When there is simultaneous transmission – Stand-alone SAR not required when ○ output ≤ 2·P_{Ref} and antenna is ≥ 5.0 cm from other antennas ○ output ≤ P_{Ref} and antenna is ≥ 2.5 cm from other antennas ○ output ≤ P_{Ref} and antenna is < 2.5 cm from other antennas, each with either output power ≤ P_{Ref} or 1-g SAR < 1.2 W/kg Otherwise stand-alone SAR is required When stand-alone SAR is required ○ test SAR on highest output channel for each wireless mode and exposure condition ○ if SAR for highest output channel is > 50% of SAR limit, evaluate all channels according to normal procedures	

Table 26: Summary of SAR Evaluation Requirements for a Cell Phone with Multiple Transmitters

The closest distance between WiFi antenna and main antenna is 3.6cm,which is between 2.5cm and 5cm, and the location of the antennas inside Mobile WiFi is shown as below picture:

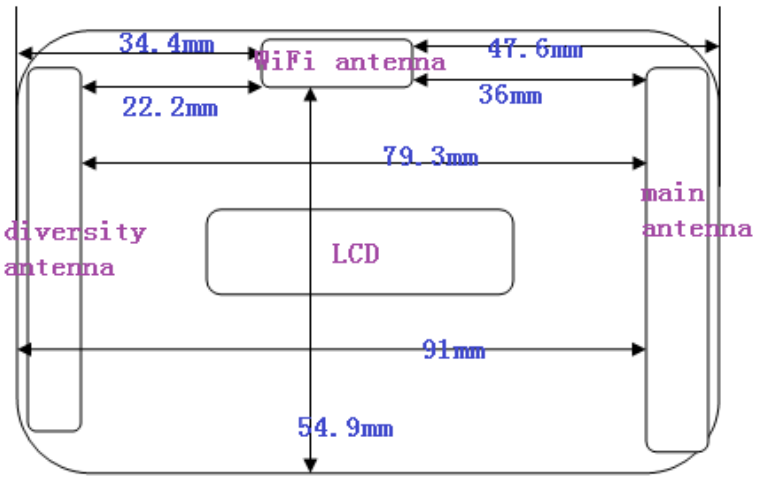

The output power of WiFi antenna is as following:

Wi-Fi 2450MHz	Channel	Average Power (dBm) for Data Rates (Mbps)							
		1	2	5.5	11	/	/	/	/
802.11b	1	**13.22**	13.03	13.15	13.13	/	/	/	/
	6	13.16	13.08	13.02	12.96	/	/	/	/
	11	13.07	13.03	13.17	13.13	/	/	/	/
802.11g	Channel	6	9	12	18	24	36	48	54
	1	11.17	11.06	11.05	11.05	10.64	10.73	10.96	10.99
	6	11.93	11.95	11.87	11.67	11.25	11.23	11.50	11.49
	11	11.52	11.42	11.54	11.43	11.03	10.93	11.22	11.17
802.11n HT20	Channel	6.5	13	19.5	26	39	52	58.5	65
	1	6.17	6.21	6.44	6.85	6.88	6.95	6.88	6.67
	6	6.98	8.85	7.15	7.34	7.35	7.37	7.32	7.26
	11	7.66	7.54	7.70	7.87	7.78	7.80	7.87	7.82

Table 27:Test results conducted power measurement WiFi .

Note:

1. The conducted power of WiFi is measured with RMS detector.
2. Per KDB248227, For each frequency band, Testing at higher data rates and higher order modulations is not required when the maximum average output power for each of these configurations is less than 1/4dB higher than those measured at the lowest data rate.

7.3.1 Stand-alone SAR

According to the output power measurement results and the distance between WiFi antenna and main antenna we can draw the conclusion that:

Stand-alone SAR evaluation is required for WiFi, because the output power of WiFi unlicensed transmitter is 13.22dBm > 12mW (10.8dBm)and its antenna(s) is 3.6cm from main antenna, which is between 2.5cm and 5.0cm.

7.3.2 SAR Summation Scenario

Hotspot mode SAR Test Position	GSM&WCDMA&CDMA SAR_{Max}				WiFi SAR_{Max}	Σ1-g SARmax
	GSM1900	Band V	Band II	BC0		
Front side	0.561	0.732	**0.886**	0.732	**0.142**	**1.028**
Rear side	0.420	**0.682**	0.606	0.670	**0.026**	0.708
Left side	NA	NA	NA	NA	**NA**	NA
Right side	0.660	0.070	**0.995**	0.069	**NA**	0.995
Top side	0.098	0.368	0.155	**0.384**	**0.089**	0.473
Bottom side	0.146	**0.381**	0.200	0.409	**NA**	0.381

Table 28: Simultaneous Tx Combination

Note:

For the transmitters requiring stand-alone SAR testing,the KDB guidelines direct that if the sum of the 1-g SAR measured for the simultaneously transmitting antennas is less than the SAR limit, SAR evaluation for simultaneous transmission is not required.

7.3.3 Simultaneous SAR

Simultaneous Transmission SAR evaluation is not required for WiFi and GSM&UMTS&CDMA, because the sum of the 1g SAR is 1.028W/kg < 1.6W/kg for WiFi and GSM&UMTS&CDMA.

Appendix A. System Check Plots
(Pls See Appendix A.)

Appendix B. SAR Measurement Plots
(Pls See Appendix B.)

Appendix C. Calibration Certificate
(Pls See Appendix C.)

Appendix D. Photo documentation
(Pls See Appendix D.)

End