FCC SAR Compliance Test Report

Project Name: UMTS Smart Phone

Model : HUAWEI G527-U081, G527-U081

FCC ID : QISG527-U081

Report No. : SYBH(Z-SAR)039072013-2

	APPROVED (Lab Manager)	PREPARED (Test Engineer)
BY	Alwinway	Qin Guohui
DATE	2013-09-22	2013-09-22

The test results of this test report relate exclusively to the item(s) tested , The HUAWEI does not assume responsibility for any conclusions and generalisations drawn from the test results with regard to other specimens or samples of the type of the equipment represented by the test item. The test report may only be reproduced or published in full. Reproduction or publication of extracts from the report requires the prior written approval of HUAWEI.

Reliability Laboratory of Huawei Technologies Co., Ltd.

Administration Building, Headquarters of Huawei Technologies Co., Ltd., Bantian, Longgang District, Shenzhen, 518129, P.R.C
Tel: +86 755 28780808 Fax: +86 755 89652518

Table of Contents

1 General Information 4
1.1 Statement of Compliance 4
1.2 RF exposure limits 5
1.3 EUT Description 6
1.3.1 General Description 7
1.4 Test specification(s) 8
1.5 Testing laboratory 8
1.6 Applicant and Manufacturer 8
1.7 Application details 8
1.8 Ambient Condition 8
2 SAR Measurement System 9
2.1 SAR Measurement Set-up 9
2.2 Test environment 10
2.3 Data Acquisition Electronics description 10
2.4 Probe description 11
2.5 Phantom description 12
2.6 Device holder description 12
2.7 Test Equipment List 13
3 SAR Measurement Procedure 14
3.1 Scanning procedure 14
3.2 Spatial Peak SAR Evaluation 15
3.3 Data Storage and Evaluation 16
4 System Verification Procedure 18
4.1 Tissue Verification 18
4.2 System Check 21
4.3 System check Procedure 22
5 Measurement Uncertainty Evaluation 23
5.1 Measurement uncertainty evaluation for SAR test 23
5.2 Measurement uncertainty evaluation for system check 24
6 SAR Test Configuration 25
6.1 GSM Test Configuration 25
6.2 UMTS Test Configuration 25
6.3 WiFi Test Configuration 29
7 SAR Measurement Results 30
7.1 Conducted power measurements 30
7.1.1 Conducted power measurements GSM850 30
7.1.2 Conducted power measurements GSM1900 31
7.1.3 Conducted power measurements UMTS Band V 31
7.1.4 Conducted power measurements UMTS Band IV 32
7.1.5 Conducted power measurements UMTS Band II 32
7.1.6 Conducted power measurements WiFi&BT 33
7.2 SAR measurement Result 34
7.2.1 SAR measurement Result of GSM850 34
7.2.2 SAR measurement Result of GSM1900 36
7.2.3 SAR measurement Result of UMTS Band V 38
7.2.4 SAR measurement Result of UMTS Band IV 39
7.2.5 SAR measurement Result of UMTS Band II 40
7.2.6 SAR measurement Result of WiFi 41
7.3 Multiple Transmitter Evaluation 42
7.3.1 Stand-alone SAR test exclusion 43
7.3.2 Simultaneous Transmission Possibilities 45
7.3.3 SAR Summation Scenario 45
7.3.4 Simultaneous Transmission Conlcusion 49
Appendix A. System Check Plots 50
Appendix B. SAR Measurement Plots 50
Appendix C. Calibration Certificate 50
Appendix D. Photo documentation 50

※ ※ Modified History ※ ※

REV.	DESCRIPTION	ISSUED DATE	REMARK
Rev.1.0	Initial Test Report Release	2013-09-16	Qin Guohui
Rev. 1.1	Page 33: Update the BT average conducted power in Table 20;	2013-09-22	Qin Guohui

1 General Information

1.1 Statement of Compliance

The maximum results of Specific Absorption Rate (SAR) found during testing for HUAWEI G527-U081, G527-U081 are as below Table 1.

Band	Position*	MAX Reported SAR_{1g} (W/kg)
GSM850	Head	0.309
	Body Worn(15mm)	0.522
	Hotspot(10mm)	0.767
GSM1900	Head	0.344
	Body Worn(15mm)	0.366
	Hotspot(10mm)	0.668
UMTS Band V	Head	0.293
	Body Worn(15mm)	0.509
	Hotspot(10mm)	0.633
UMTS Band IV	Head	0.557
	Body Worn(15mm)	0.602
	Hotspot(10mm)	1.132
UMTS Band II	Head	**0.729**
	Body Worn(15mm)	**0.731**
	Hotspot(10mm)	**1.179**
WiFi	Head	0.106
	Body Worn(15mm)	0.014
	Hotspot(10mm)	0.045
The highest simultaneous SAR is 1.238W/kg per KDB690783 D01		

Table 1:Summary of test result

Note: *For body worn operation, this device has been tested and meets FCC RF exposure guidelines when used with any accessory that contains no metal and that positions the handset a minimum of 15mm from the body. Use of other accessories may not ensure compliance with FCC RF exposure guidelines.

The device is in compliance with Specific Absorption Rate（SAR）for general population/uncontraolled exposure limits of 1.6 W/Kg as averaged over any 1g tissue according to the FCC rule §2.1093, the ANSI/IEEE C95.1:1992, the NCRP Report Number 86 for uncontrolled environment, according to the Industry Canada Radio Standards Specification RSS-102 for General Population/Uncontrolled exposure, and had been tested in accordance with the measurement methods and procedures specified in IEEE Std 1528-2003 & IEEE Std 1528a-2005.

1.2 RF exposure limits

Human Exposure	Uncontrolled Environment General Population	Controlled Environment Occupational
Spatial Peak SAR* (Brain/Body/Arms/Legs)	**1.60 mW/g**	8.00 mW/g
Spatial Average SAR** (Whole Body)	0.08 mW/g	0.40 mW/g
Spatial Peak SAR*** (Hands/Feet/Ankle/Wrist)	4.00 mW/g	20.00 mW/g

Table 2: RF exposure limits

The limit applied in this test report is shown in **bold** letters

Notes:

* The Spatial Peak value of the SAR averaged over any 1 gram of tissue (defined as a tissue volume in the shape of a cube) and over the appropriate averaging time.

** The Spatial Average value of the SAR averaged over the whole body.

*** The Spatial Peak value of the SAR averaged over any 10 grams of tissue (defined as a tissue volume in the shape of a cube) and over the appropriate averaging time.

Uncontrolled Environments are defined as locations where there is the exposure of individuals who have no knowledge or control of their exposure.

Controlled Environments are defined as locations where there is exposure that may be incurred by persons who are aware of the potential for exposure, (i.e. as a result of employment or occupation.

1.3 EUT Description

Device Information:			
DUT Name:	UMTS Smart Phone		
Type Identification:	HUAWEI G527-U081, G527-U081		
FCC ID :	QISG527-U081		
SN No.:	G6E01A9381300533		
Device Type :	portable device		
Device Phase:	Identical Prototype		
Exposure Category:	uncontrolled environment / general population		
Hardware Version :	HU1G527U081M		
Software Version :	G527-U081V100R001USAC189B135		
Antenna Type :	internal antenna		
Others Accessories	Headset		
Device Operating Configurations:			
Supporting Mode(s)	GSM850/1900, UMTS Band V/IV/II, WiFi (tested),BT		
Test Modulation	GSM(GMSK/8PSK), UMTS(QPSK)		
Device Class	B		
Operating Frequency Range(s)	Band	Tx (MHz)	Rx (MHz)
	GSM850	824-849	869-894
	GSM1900	1850-1910	1930-1990
	UMTS Band V	824-849	869-894
	UMTS Band IV	1713 - 1753	2113 - 2153
	UMTS Band II	1850-1910	1930-1990
	BT	2402-2480	
	WiFi	2412-2462	
GPRS Multislot Class(10)	Max Number of Timeslots in Uplink:	2	
	Max Number of Timeslots in Downlink:	4	
	Max Total Timeslot:	5	
EGPRS Multislot Class(10)	Max Number of Timeslots in Uplink:	2	
	Max Number of Timeslots in Downlink:	4	
	Max Total Timeslot:	5	
HSDPA UE Category	14		
HSUPA UE Category:	6		
Power Class:	4,tested with power level 5(GSM850)		
	1,tested with power level 0(GSM1900)		
	3, tested with power control “all 1”(UMTS Band V)		
	3, tested with power control “all 1”(UMTS Band IV)		
	3, tested with power control “all 1”(UMTS Band II)		
Test Channels (low-mid-high):	128-190-251 (GSM850)		
	512-661-810 (GSM1900)		
	4132-4182-4233 (UMTS Band V)		
	1312-1413-1513 (UMTS Band IV)		
	9262-9400-9538 (UMTS Band II)		
	1-6-11 (WiFi 2450)		

Table 3:Device information and operating configuration

1.3.1 General Description

HUAWEI G527-U081, G527-U081 is subscriber equipment in the WCDMA/GSM system. The HSPA/UMTS frequency band includes Band I and Band II and Band IV and Band V. The GSM/GPRS/EDGE frequency band includes GSM850 and GSM900 and DCS1800 and PCS1900, but only GSM850, PCS1900, Band II, Band IV and Band V bands test data included in this report. The Mobile Phone implements such functions as RF signal receiving/transmitting, HSPA/UMTS and GSM/GPRS/EDGE protocol processing, voice, video MMS service, GPS, AGPS and WIFI etc. Externally it provides micro SD card interface, earphone port(to provide voice service) and USIM card interface. It also provides Bluetooth module to synchronize data between a PC and the phone, or to use the built-in modem of the phone to access the Internet with a PC, or to exchange data with other Bluetooth devices.

Battery

Name	Manufacture	Serials number	Description
Rechargeable Li-ion	Huawei Technologies Co., Ltd.	1#：AAID617X24331702 2#：LQCD7079243G3800	Battery Model: HB505076RBC Rated capacity: 2150mAh Nominal Voltage: ⎓ +3.8V Charging Voltage: ⎓ +4.35V

1.4 Test specification(s)

ANSI Std C95.1-1992	Safety Levels with Respect to Human Exposure to Radio Frequency Electromagnetic Fields, 3 kHz – 300 GHz.(IEEE Std C95.1-1991)
IEEE Std 1528-2003	Recommended Practice for Determining the Peak Spatial-Average Specific Absorption Rate (SAR) in the Human Head from Wireless Communications Devices: Measurement Techniques
IEEE Std 1528a-2005	IEEE Recommended Practice for Determining the Peak Spatial-Average Specific Absorption Rate (SAR) in the Human Head from Wireless Communications Devices: Measurement Techniques Amendment 1: CAD File for Human Head Model (SAM Phantom)
RSS-102	Radio Frequency Exposure Compliance of Radiocommunication Apparatus (All Frequency Bands (Issue 4 of March 2010)
KDB941225 D01	SAR test for 3G devices v02
KDB941225 D02	HSPA and 1x Advanced v02r02
KDB941225 D03	SAR Test Reduction GSM GPRS EDGE v01
KDB941225 D06	Hot Spot SAR v01r01
KDB447498 D01	General RF Exposure Guidance v05r01
KDB648474 D04	SAR Handsets Multi Xmiter and Ant v01r01
KDB248227 D01	SAR meas for 802.11 a/b/g v01r02
KDB865664 D01	SAR measurement 100 MHz to 6 GHz v01r01
KDB865664 D02	SAR Reporting v01r01

1.5 Testing laboratory

Test Site	The Reliability Laboratory of Huawei Technologies Co., Ltd.
Test Location	Zone K3,Huawei Industrial Base, Bantian Industry Area, Longgang District, Shenzhen, Guangdong, China
Telephone	+86 755 28780808
Fax	+86 755 89652518
State of accreditation	The Test laboratory (area of testing) is accredited according to ISO/IEC 17025. CNAS Registration number: L0310 A2LA TESTING CERT #2174.01

1.6 Applicant and Manufacturer

Company Name	HUAWEI TECHNOLOGIES CO., LTD
Address	Administration Building, Headquarters of Huawei Technologies Co., Ltd., Bantian, Longgang District, Shenzhen, 518129, P.R.C

1.7 Application details

Start Date of test	2013-09-06
End Date of test	2013-09-12

1.8 Ambient Condition

Ambient temperature	20°C – 24°C
Relative Humidity	30% – 70%

2 SAR Measurement System

2.1 SAR Measurement Set-up

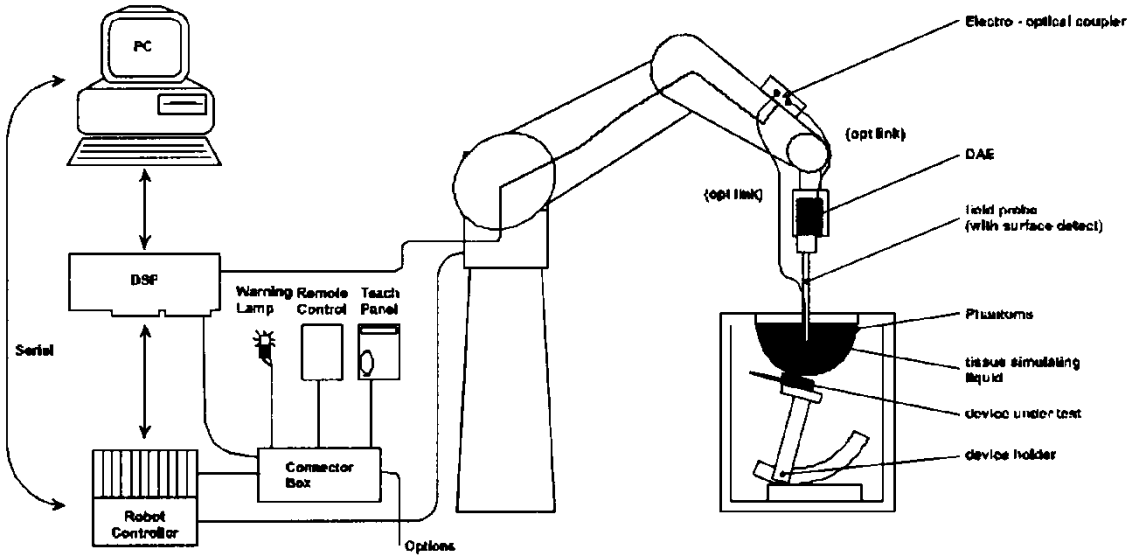

The DASY5 system for performing compliance tests consists of the following items:

- A standard high precision 6-axis robot (Stäubli RX family) with controller and software. An arm extension for accommodating the data acquisition electronics (DAE).

- A dosimetric probe, i.e. an isotropic E-field probe optimized and calibrated for usage in tissue simulating liquid. The probe is equipped with an optical surface detector system.

- A data acquisition electronic (DAE) which performs the signal amplification, signal multiplexing, AD-conversion, offset measurements, mechanical surface detection, collision detection, etc. The unit is battery powered with standard or rechargeable batteries. The signal is optically transmitted to the EOC.
- A unit to operate the optical surface detector which is connected to the EOC.
- The Electro-Optical Coupler (EOC) performs the conversion from the optical into a digital electric signal of the DAE. The EOC is connected to the DASY5 measurement server.
- The DASY5 measurement server, which performs all real-time data evaluation for field measurements and surface detection, controls robot movements and handles safety operation. A computer operating Windows XP.
- DASY5 software and SEMCAD data evaluation software.
- Remote control with teach panel and additional circuitry for robot safety such as warning lamps, etc.
- The generic twin phantom enabling the testing of left-hand and right-hand usage.
- The device holder for handheld mobile phones.
- Tissue simulating liquid mixed according to the given recipes.
- System check dipoles allowing to validate the proper functioning of the system.

2.2 Test environment

The DASY4 measurement system is placed at the head end of a room with dimensions:
5 x 2.5 x 3 m³, the SAM phantom is placed in a distance of 75 cm from the side walls and 1.1m from the rear wall. Above the test system a 1.5 x 1.5 m² array of pyramid absorbers is installed to reduce reflections from the ceiling.
Picture 1 of the photo documentation shows a complete view of the test environment.
The system allows the measurement of SAR values larger than 0.005 mW/g.

2.3 Data Acquisition Electronics description

The data acquisition electronics (DAE) consist of a highly sensitive electrometer-grade preamplifier with auto-zeroing, a channel and gain-switching multiplexer, a fast 16 bit AD-converte and a command decoder with a control logic unit. Transmission to the measurement server is accomplished through an optical downlink for data and status information, as well as an optical uplink for commands and the clock.

The mechanical probe mounting device includes two different sensor systems for frontal and sideways probe contacts. They are used for mechanical surface detection and probe collision detection.

DAE4

Input Impedance	200MOhm	
The Inputs	symmetrical and floating	
Common mode rejection	above 80 dB	

2.4 Probe description

These probes are specially designed and calibrated for use in liquids with high permittivities. They should not be used in air, since the spherical isotropy in air is poor (±2 dB). The dosimetric probes have special calibrations in various liquids at different frequencies.

Isotropic E-Field Probe ES3DV3 for Dosimetric Measurements

Construction	Symmetrical design with triangular core Interleaved sensors Built-in shielding against static charges PEEK enclosure material (resistant to organic solvents, e.g., DGBE)	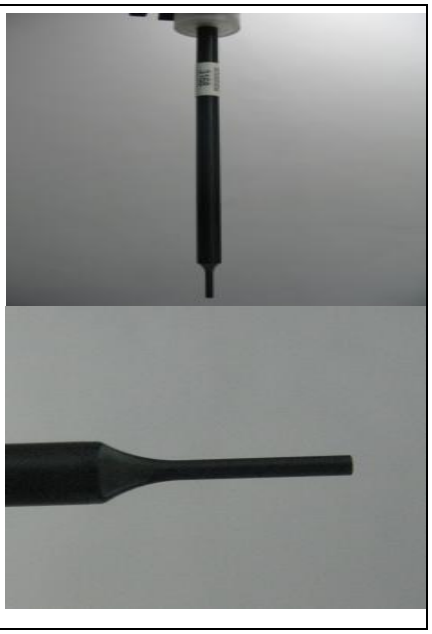
Calibration	ISO/IEC 17025 calibration service available.	
Frequency	10 MHz to 4 GHz; Linearity: ± 0.2 dB (30 MHz to 4 GHz)	
Directivity	± 0.2 dB in HSL (rotation around probe axis) ± 0.3 dB in tissue material (rotation normal to probe axis)	
Dynamic range	5 µW/g to > 100 mW/g; Linearity: ± 0.2 dB	
Dimensions	Overall length: 337 mm (Tip: 20 mm) Tip diameter: 3.9 mm (Body: 12 mm) Distance from probe tip to dipole centers: 2.0 mm	
Application	General dosimetry up to 4 GHz Dosimetry in strong gradient fields Compliance tests of mobile phones	

Isotropic E-Field Probe EX3DV4 for Dosimetric Measurements

Construction	Symmetrical design with triangular core Built-in shielding against static charges PEEK enclosure material (resistant to organic solvents, e.g., DGBE)	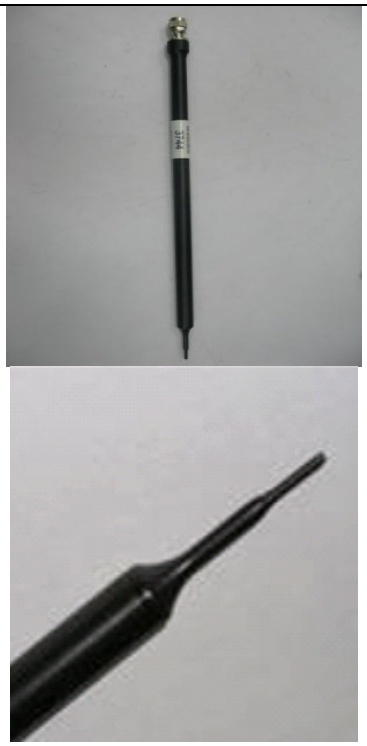
Calibration	ISO/IEC 17025 calibration service available.	
Frequency	10 MHz to >6 GHz; Linearity: ± 0.2 dB (30 MHz to 6 GHz)	
Directivity	± 0.3 dB in HSL (rotation around probe axis) ± 0.5 dB in tissue material (rotation normal to probe axis)	
Dynamic range	10 µW/g to > 100 mW/g; Linearity: ± 0.2 dB(noise:typically<1µW/g)	
Dimensions	Overall length: 337 mm (Tip:20 mm) Tip diameter:2.5 mm (Body:12 mm) Typical distance from probe tip to dipole centers: 1mm	
Application	High precision dosimetric measurements in any exposure scenario(e.g.,very strong gradient fields). Only probe which enables compliance testing for frequencies up to 6 GHz with precision of better 30%	

2.5 Phantom description

SAM Twin Phantom

Shell Thickness	2mm +/- 0.2 mm; The ear region: 6mm	
Filling Volume	Approximately 30 liters	
Dimensions	Length:1000mm; Width:500mm; Height: adjustable feet	
Measurement Areas	Left hand Right hand Flat phantom	
The bottom plate contains three pairs of bolts for locking the device holder. The device holder positions are adjusted to the standard measurement positions in the three sections. A white cover is provided to cover the phantom during off-periods to prevent water evaporation and changes in the liquid parameters. Free space scans of devices on top of this phantom cover are possible. Three reference marks are provided on the phantom counter. These reference marks are used to teach the absolute phantom position relative to the robot.		

ELI4 Phantom

Shell Thickness	2mm +/- 0.2 mm	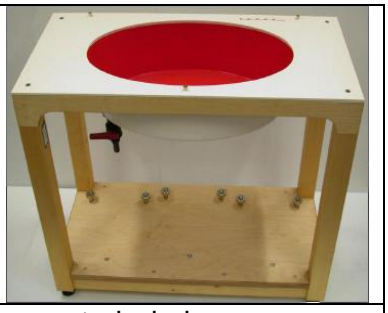
Filling Volume	Approximately 30 liters	
Dimensions	Length:1000mm; Width:500mm; Height: adjustable feet	
Measurement Areas	Flat phantom	
The ELI4 phantom is intended for compliance testing of handheld and body-mounted wireless devices in the frequency range of 30MHz to 6GHz. ELI4 is fully compatible with the latest draft of the standard IEC 62209-2 and all known tissue simulating liquids.		

2.6 Device holder description

The DASY5 device holder has two scales for device rotation (with respect to the body axis) and the device inclination (with respect to the line between the ear openings). The plane between the ear openings and the mouth tip has a rotation angle of 65°. The bottom plate contains three pair of bolts for locking the device holder. The device holder positions are adjusted to the standard measurement positions in the three sections. This device holder is used for standard mobile phones or PDA's only. If necessary an additional support of polystyrene material is used.

Larger DUT's (e.g. notebooks) cannot be tested using this device holder. Instead a support of bigger polystyrene cubes and thin polystyrene plates is used to position the DUT in all relevant positions to find and measure spots with maximum SAR values.
Therefore those devices are normally only tested at the flat part of the SAM.

2.7 Test Equipment List

This table gives a complete overview of the SAR measurement equipment
Devices used during the test described are marked ☒

	Manufacturer	Device	Type	Serial number	Date of last calibration)*	Valid period
☒	SPEAG	Dosimetric E-Field Probe	ES3DV3	3168	2012-10-02	One year
☒	SPEAG	835 MHz Dipole	D835V2	4d059	2013-05-02	Three years
☒	SPEAG	1800 MHz Dipole	D1800V2	2d184	2011-03-08	Three years
☒	SPEAG	1900 MHz Dipole	D1900V2	5d143	2011-09-26	Three years
☐	SPEAG	2000 MHz Dipole	D2000V2	1052	2011-03-10	Three years
☐	SPEAG	2300 MHz Dipole	D2300V2	1016	2011-11-22	Three years
☒	SPEAG	2450 MHz Dipole	D2450V2	860	2011-03-08	Three years
☐	SPEAG	2600 MHz Dipole	D2600V2	1021	2011-11-22	Three years
☒	SPEAG	Data acquisition electronics	DAE4	1236	2012-11-23	One year
☒	SPEAG	Software	DASY 5	N/A	N/A	N/A
☒	SPEAG	Twin Phantom	SAM1	TP-1475	N/A	N/A
☒	SPEAG	Twin Phantom	SAM2	TP-1474	N/A	N/A
☐	SPEAG	Twin Phantom	SAM3	TP-1597	N/A	N/A
☐	SPEAG	Twin Phantom	SAM4	TP-1620	N/A	N/A
☐	SPEAG	Flat Phantom	ELI 4.0	TP-1038	N/A	N/A
☐	SPEAG	Flat Phantom	ELI 4.0	TP-1111	N/A	N/A
☒	R & S	Universal Radio Communication Tester	CMU 200	113989	2013-06-08	One year
☒	Agilent)*	Network Analyser	E5071B	MY42404956	2013-02-27	One year
☒	Agilent	Dielectric Probe Kit	85070E	2484	N/A	N/A
☒	Agilent	Signal Generator	N5181A	MY47420989	2013-02-27	One year
☒	MINI-CIRCUITS	Amplifier	ZHL-42W	QA0746001	N/A	N/A
☒	Agilent	Power Meter	E4417A	MY45101339	2013-02-26	One year
☒	Agilent	Power Meter Sensor	E9321A	MY44420359	2013-02-26	One year

Note: All the test equipments are calibrated once a year, except the dipoles, which are calibrated every three years. Moreover, we have self-calibration every year to the dipoles.

1) Per KDB865664 requirements for dipole calibration, Huawei SAR lab has adopted three years calibration interval. But each measured dipole is expected to evaluate with the following criteria at least on annual interval in Appendix C.

a) There is no physical damage on the dipole;
b) System check with specific dipole is within 10% of calibrated value;
c) Return-loss is within 10% of calibrated measurement;
d) Impedance is within 5Ω from the previous measurement.

2) Network analyzer probe calibration against air, distilled water and a shorting block performed before measuring liquid parameters.

3 SAR Measurement Procedure

3.1 Scanning procedure

The DASY5 installation includes predefined files with recommended procedures for measurements and system check. They are read-only document files and destined as fully defined but unmeasured masks. All test positions (head or body-worn) are tested with the same configuration of test steps differing only in the grid definition for the different test positions.

- The “reference” and “drift” measurements are located at the beginning and end of the batch process. They measure the field drift at one single point in the liquid over the complete procedure. The indicated drift is mainly the variation of the DUT’s output power and should vary max. +/- 5 %.

- The “surface check” measurement tests the optical surface detection system of the DASY5 system by repeatedly detecting the surface with the optical and mechanical surface detector and comparing the results. The output gives the detecting heights of both systems, the difference between the two systems and the standard deviation of the detection repeatability. Air bubbles or refraction in the liquid due to separation of the sugar-water mixture gives poor repeatability (above ± 0.1mm). To prevent wrong results tests are only executed when the liquid is free of air bubbles. The difference between the optical surface detection and the actual surface depends on the probe and is specified with each probe. (It does not depend on the surface reflectivity or the probe angle to the surface within ± 30°.)

- The “area scan” measures the SAR above the DUT or verification dipole on a parallel plane to the surface. It is used to locate the approximate location of the peak SAR with 2D spline interpolation. The robot performs a stepped movement along one grid axis while the local electrical field strength is measured by the probe. The probe is touching the surface of the SAM during acquisition of measurement values. The standard scan uses large grid spacing for faster measurement. Standard grid spacing for head measurements is 15 mm in x- and y- dimension(≤2GHz)，12 mm in x- and y-dimension(2-4 GHz) and 10mm in x- and y- dimension(4-6GHz). If a finer resolution is needed, the grid spacing can be reduced. Grid spacing and orientation have no influence on the SAR result. For special applications where the standard scan method does not find the peak SAR within the grid, e.g. mobile phones with flip cover, the grid can be adapted in orientation.
  Results of this coarse scan are shown in Appendix B.

- A “zoom scan” measures the field in a volume around the 2D peak SAR value acquired in the previous “coarse” scan. This is a fine grid with maximum scan spatial resolution: Δx_{zoom}, Δy_{zoom} ≤ 2GHz - ≤ 8 mm，2-4GHz - ≤ 5 mm and 4-6 GHz-≤ 4 mm; Δz_{zoom} ≤ 3GHz - ≤ 5 mm, 3-4 GHz-≤ 4 mm 4-6GHz-≤2mm where the robot additionally moves the probe along the z-axis away from the bottom of the Phantom. DASY is also able to perform repeated zoom scans if more than 1 peak is found during area scan. In this document, the evaluated peak 1g and 10g averaged SAR values are shown in the 2D-graphics in Appendix B. Test results relevant for the specified standard (see chapter 1.4.)are shown in table form form in chapter 7.2.
- A Z-axis scan measures the total SAR value at the x-and y-position of the maximum SAR value found during the cube scan. The probe is moved away in z-direction from the bottom of the SAM phantom in 2 mm steps. This measurement shows the continuity of the liquid and can - depending in the field strength – also show the liquid depth. A z-axis scan of the measurement with maximum SAR value is shown in Appendix B.

3.2 Spatial Peak SAR Evaluation

The spatial peak SAR - value for 1 and 10 g is evaluated after the Cube measurements have been done. The basis of the evaluation are the SAR values measured at the points of the fine cube grid consisting of 5 x 5 x 7 points(with 8mm horizontal resolution) or 7 x 7 x 7 points(with 5mm horizontal resolution). The algorithm that finds the maximal averaged volume is separated into three different stages.

- The data between the dipole center of the probe and the surface of the phantom are extrapolated. This data cannot be measured since the center of the dipole is 2.7 mm away from the tip of the probe and the distance between the surface and the lowest measuring point is about 1 mm (see probe calibration sheet). The extrapolated data from a cube measurement can be visualized by selecting 'Graph Evaluated'.

- The maximum interpolated value is searched with a straight-forward algorithm. Around this maximum the SAR - values averaged over the spatial volumes (1g or 10 g) are computed using the 3d-spline interpolation algorithm. If the volume cannot be evaluated (i.e., if a part of the grid was cut off by the boundary of the measurement area) the evaluation will be started on the corners of the bottom plane of the cube.

- All neighboring volumes are evaluated until no neighboring volume with a higher average value is found.

Extrapolation

The extrapolation is based on a least square algorithm [W. Gander, Computermathematik, p.168-180]. Through the points in the first 3 cm along the z-axis, polynomials of order four are calculated. These polynomials are then used to evaluate the points between the surface and the probe tip. The points, calculated from the surface, have a distance of 1 mm from each other.

Interpolation

The interpolation of the points is done with a 3d-Spline. The 3d-Spline is composed of three one-dimensional splines with the "Not a knot"-condition [W. Gander, Computermathematik, p.141-150] (x, y and z -direction) [Numerical Recipes in C, Second Edition, p.123ff].

Volume Averaging

At First the size of the cube is calculated. Then the volume is integrated with the trapezoidal algorithm. 8000 points (20x20x20) are interpolated to calculate the average.

Advanced Extrapolation

DASY5 uses the advanced extrapolation option which is able to compansate boundary effects on E-field probes.

3.3 Data Storage and Evaluation

Data Storage

The DASY5 software stores the acquired data from the data acquisition electronics as raw data (in microvolt readings from the probe sensors), together with all necessary software parameters for the data evaluation (probe calibration data, liquid parameters and device frequency and modulation data) in measurement files with the extension "DAE4". The software evaluates the desired unit and format for output each time the data is visualized or exported. This allows verification of the complete software setup even after the measurement and allows correction of incorrect parameter settings. For example, if a measurement has been performed with a wrong crest factor parameter in the device setup, the parameter can be corrected afterwards and the data can be re-evaluated.

The measured data can be visualized or exported in different units or formats, depending on the selected probe type ([V/m], [A/m], [°C], [mW/g], [mW/cm²], [dBrel], etc.). Some of these units are not available in certain situations or show meaningless results, e.g., a SAR output in a lossless media will always be zero. Raw data can also be exported to perform the evaluation with other software packages.

Data Evaluation by SEMCAD

The SEMCAD software automatically executes the following procedures to calculate the field units from the microvolt readings at the probe connector. The parameters used in the evaluation are stored in the configuration modules of the software:

Probe parameters:	- Sensitivity	$Norm_i$, a_{i0}, a_{i1}, a_{i2}
	- Conversion factor	$ConvF_i$
	- Diode compression point	Dcpi
Device parameters:	- Frequency	f
	- Crest factor	cf
Media parameters:	- Conductivity	σ
	- Density	ρ

These parameters must be set correctly in the software. They can be found in the component documents or they can be imported into the software from the configuration files issued for the DASY5 components. In the direct measuring mode of the multimeter option, the parameters of the actual system setup are used. In the scan visualization and export modes, the parameters stored in the corresponding document files are used.

The first step of the evaluation is a linearization of the filtered input signal to account for the compression characteristics of the detector diode. The compensation depends on the input signal, the diode type and the DC-transmission factor from the diode to the evaluation electronics.

If the exciting field is pulsed, the crest factor of the signal must be known to correctly compensate for peak power. The formula for each channel can be given as:

$$V_i = U_i + U_i^2 \bullet cf/dcp_i$$

with	V_i	= compensated signal of channel i	(i = x, y, z)
	U_i	= input signal of channel i	(i = x, y, z)
	cf	= crest factor of exciting field	(DASY parameter)
	dcp_i	= diode compression point	(DASY parameter)

From the compensated input signals the primary field data for each channel can be evaluated:

E-field probes: $E_i = (V_i / Norm_i \cdot ConvF)^{1/2}$

H-field probes: $H_i = (V_i)^{1/2} \cdot (a_{i0} + a_{i1}f + a_{i2}f^2)/f$

with V_i = compensated signal of channel i (i = x, y, z)
$Norm_i$ = sensor sensitivity of channel i (i = x, y, z)
[mV/(V/m)^2] for E-field Probes
ConvF = sensitivity enhancement in solution
a_{ij} = sensor sensitivity factors for H-field probes
f = carrier frequency [GHz]
E_i = electric field strength of channel i in V/m
H_i = magnetic field strength of channel i in A/m

The RSS value of the field components gives the total field strength (Hermitian magnitude):

$$E_{tot} = (E_x^2 + E_Y^2 + E_z^2)^{1/2}$$

The primary field data are used to calculate the derived field units.

$$SAR = (E_{tot}^2 \cdot \sigma) / (\rho \cdot 1000)$$

with SAR = local specific absorption rate in mW/g
E_{tot} = total field strength in V/m
σ = conductivity in [mho/m] or [Siemens/m]
ρ = equivalent tissue density in g/cm^3

Note that the density is normally set to 1 (or 1.06), to account for actual brain density rather than the density of the simulation liquid.The power flow density is calculated assuming the excitation field to be a free space field.

$P_{pwe} = E_{tot}^2 / 3770$ or $P_{pwe} = H_{tot}^2 \cdot 37.7$

with P_{pwe} = equivalent power density of a plane wave in mW/cm^2
E_{tot} = total electric field strength in V/m
H_{tot} = total magnetic field strength in A/m

4 System Verification Procedure

4.1 Tissue Verification

The simulating liquids should be checked at the beginning of a series of SAR measurements to determine of the dielectic parameter are within the tolerances of the specified target values. The measured conductivity and relative permittivity should be within ± 5% of the target values.

The following materials are used for producing the tissue-equivalent materials.

Ingredients (% of weight)	Head Tissue					
Frequency Band (MHz)	450	**835**	**1800**	**1900**	**2450**	2600
Water	38.56	41.45	52.64	55.242	62.7	55.242
Salt (NaCl)	3.95	1.45	0.36	0.306	0.5	0.306
Sugar	56.32	56.0	0.0	0.0	0.0	0.0
HEC	0.98	1.0	0.0	0.0	0.0	0.0
Bactericide	0.19	0.1	0.0	0.0	0.0	0.0
Triton X-100	0.0	0.0	0.0	0.0	0.0	0.0
DGBE	0.0	0.0	47.0	44.542	36.8	44.452
Ingredients (% of weight)	Body Tissue					
Frequency Band (MHz)	450	**835**	**1800**	**1900**	**2450**	2600
Water	51.16	52.4	69.91	69.91	73.2	64.493
Salt (NaCl)	1.49	1.40	0.13	0.13	0.04	0.024
Sugar	46.78	45.0	0.0	0.0	0.0	0.0
HEC	0.52	1.0	0.0	0.0	0.0	0.0
Bactericide	0.05	0.1	0.0	0.0	0.0	0.0
Triton X-100	0.0	0.0	0.0	0.0	0.0	0.0
DGBE	0.0	0.0	29.96	29.96	26.7	32.252

Table 4: Tissue Dielectric Properties

Salt: 99+% Pure Sodium Chloride; Sugar: 98+% Pure Sucrose; Water: De-ionized, 16MΩ+ resistivity
HEC: Hydroxyethyl Cellulose; DGBE: 99+% Di(ethylene glycol) butyl ether, [2-(2-butoxyethoxy)ethanol]
Triton X-100(ultra pure): Polyethylene glycol mono [4-(1,1,3,3-tetramethylbutyl)phenyl]ether

Tissue Type	Measured Frequency （MHz）	Target Tissue		Measured Tissue		Liquid Temp.	Test Date
		εr (+/-5%)	σ (S/m) (+/-5%)	εr	σ (S/m)		
835H	825	41.60 (39.52~43.68)	0.90 (0.86~0.95)	40.50	0.875	21.4°C	2013-9-8
	835	41.50 (39.43~43.58)	0.90 (0.86~0.95)	40.36	0.883		
	850	41.50 (39.43~43.58)	0.92 (0.87~0.96)	39.91	0.898		
835B	825	55.20 (52.44~57.96)	0.97 (0.92~1.02)	54.74	0.960	21.4°C	2013-9-8
	835	55.20 (52.44~57.96)	0.97 (0.92~1.02)	54.52	0.956		
	850	55.20 (52.44~57.96)	0.99 (0.94~1.04)	54.51	0.978		
1800H	1710	40.1 (38.10~42.11)	1.35 (1.28~1.42)	40.56	1.330	21.4°C	2013-9-6
	1730	40.1 (38.10~42.11)	1.36 (1.29~1.43)	40.50	1.355		
	1750	40.1 (38.10~42.11)	1.37 (1.30~1.44)	40.36	1.361		
	1800	40.0 (38.00~42.00)	1.40 (1.33~1.47)	40.18	1.412		
1800B	1710	53.5 (50.83~56.18)	1.46 (1.39~1.53)	53.08	1.453	21.4°C	2013-9-10
	1730	53.5 (50.83~56.18)	1.48 (1.41~1.55)	52.93	1.475		
	1750	53.4 (50.73~56.07)	1.49 (1.42~1.56)	52.91	1.498		
	1800	53.3 (50.64~55.97)	1.52 (1.44~1.60)	52.78	1.541		
1900H	1850	40.00 (38.00~42.00)	1.40 (1.33~1.47)	39.81	1.343	21.4°C	2013-9-7
	1880	40.00 (38.00~42.00)	1.40 (1.33~1.47)	39.63	1.381		
	1900	40.00 (38.00~42.00)	1.40 (1.33~1.47)	39.53	1.396		
	1910	40.00 (38.00~42.00)	1.40 (1.33~1.47)	39.54	1.410		
1900B	1850	53.30 (50.64~55.97)	1.52 (1.44~1.60)	53.63	1.471	21.4°C	2013-9-9
	1880	53.30 (50.64~55.97)	1.52 (1.44~1.60)	53.57	1.503		
	1900	53.30 (50.64~55.97)	1.52 (1.44~1.60)	53.53	1.524		
	1910	53.30 (50.64~55.97)	1.52 (1.44~1.60)	53.52	1.535		

2450H	2410	39.30 (37.34~41.26)	1.76 (1.67~1.85)	38.95	1.782	21.4°C	2013-9-11
	2435	39.20 (37.24~41.16)	1.79 (1.70~1.88)	38.98	1.827		
	2450	39.20 (37.24~41.16)	1.80 (1.71~1.89)	38.86	1.823		
	2460	39.20 (37.24~41.16)	1.81 (1.72~1.90)	38.79	1.840		
2450B	2410	52.80 (50.16~55.44)	1.91 (1.81~2.00)	52.17	1.941	21.4°C	2013-9-12
	2435	52.70 (50.07~55.34)	1.94 (1.84~2.04)	52.04	1.968		
	2450	52.70 (50.07~55.34)	1.95 (1.85~2.05)	51.95	1.982		
	2460	52.70 (50.07~55.34)	1.96 (1.86~2.06)	51.91	1.995		
ε_r= Relative permittivity, σ= Conductivity							

Table 5:Measured Tissue Parameter

Note: 1）The dielectric parameters of the tissue-equivalent liquid should be measured under similar ambient conditions and within 2 °C of the conditions expected during the SAR evaluation to satisfy protocol requirements.

2）KDB 865664 was ensured to be applied for probe calibration frequencies greater than or equal to 50MHz of the EUT frequencies.

3）The above measured tissue parameters were used in the DASY software to perform interpolation via the DASY software to determine actual dielectric parameters at the test frequencies. The SAR test plots may slightly differ from the table above since the DASY rounds to three significant digits.

4）For UMTS measurements in band IV, and for 1800 MHz system verification the same TSL and 1750 MHz SAR probe calibration point have been used.

4.2 System Check

The system check is performed for verifying the accuracy of the complete measurement system and performance of the software. The system check is performed with tissue equivalent material according to IEEE P1528 (described above). The following table shows system check results for all frequency bands and tissue liquids used during the tests (Graphic Plot(s) see Appendix A).

System Check	Target SAR (1W) (+/-10%)		Measured SAR (Normalized to 1W)		Liquid Temp.	Test Date
	1-g (mW/g)	10-g (mW/g)	1-g (mW/g)	10-g (mW/g)		
D835V2 Head	9.49 (8.54~10.44)	6.18 (5.56~6.80)	9.24	6.00	21.4°C	2013-9-8
D1800V2 Head	39.1 (35.19~43.01)	20.3 (18.27~22.33)	38.80	20.28	21.4°C	2013-9-6
D1900V2 Head	40.60 (36.54~44.66)	21.20 (19.08~23.32)	37.04	19.20	21.4°C	2013-9-7
D2450V2 Head	53.70 (48.33~59.07)	24.90 (22.41~27.39)	52.80	23.92	21.4°C	2013-9-11
D835V2 Body	9.42 (8.48~10.36)	6.19 (5.57~6.80)	9.24	6.12	21.4°C	2013-9-8
D1800V2 Body	38.8 (34.92~42.68)	20.4 (18.36~22.44)	37.08	19.12	21.4°C	2013-9-10
D1900V2 Body	41.40 (37.26~45.54)	21.80 (19.62~23.98)	39.00	20.16	21.4°C	2013-9-9
D2450V2 Body	52.80 (47.52~58.08)	24.50 (22.05~26.95)	53.20	23.52	21.6°C	2013-9-12

Table 6:System Check Results

4.3 System check Procedure

The system check is performed by using a system check dipole which is positioned parallel to the planar part of the SAM phantom at the reference point. The distance of the dipole to the SAM phantom is determined by a plexiglass spacer. The dipole is connected to the signal source consisting of signal generator and amplifier via a directional coupler, N-connector cable and adaption to SMA. It is fed with a power of 250 mW. To adjust this power a power meter is used. The power sensor is connected to the cable before the system check to measure the power at this point and do adjustments at the signal generator. At the outputs of the directional coupler both return loss as well as forward power are controlled during the system check to make sure that emitted power at the dipole is kept constant. This can also be checked by the power drift measurement after the test (result on plot).
System check results have to be equal or near the values determined during dipole calibration (target SAR in table above) with the relevant liquids and test system.

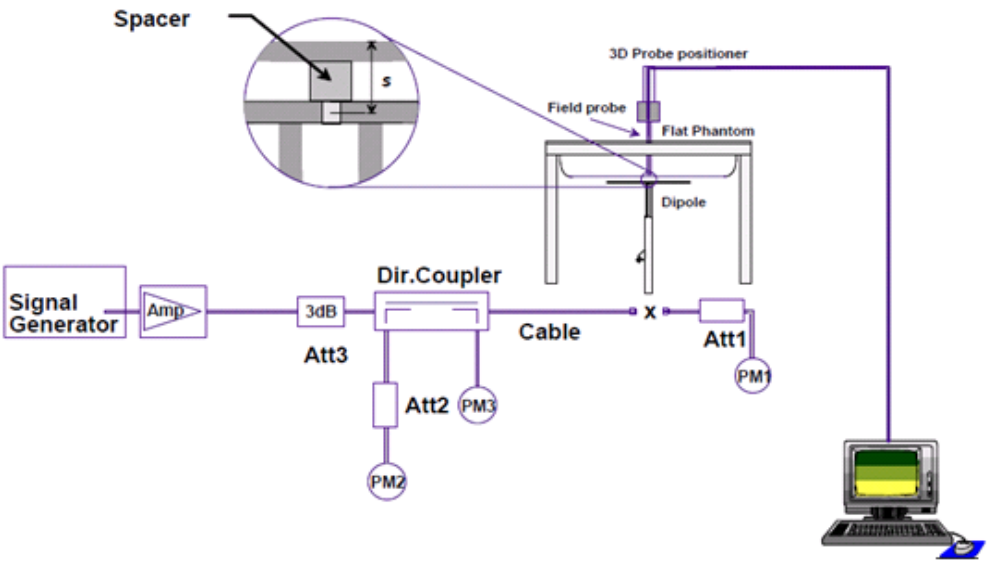

5 Measurement Uncertainty Evaluation

5.1 Measurement uncertainty evaluation for SAR test

The overall combined measurement uncertainty of the measurement system is ± 10.9% (K=1).
The expanded uncertainty (k=2) is assessed to be ± 21.9%
This measurement uncertainty budget is suggested by IEEE P1528 and determined by Schmid & Partner Engineering AG. The breakdown of the individual uncertainties is as follows:

Error Sources	Uncertainty Value	Probability Distribution	Divi-sor	c_i 1g	c_i 10g	Standard Uncertainty 1g	Standard Uncertainty10g	v_i^2 or v_{eff}
Measurement System								
Probe calibration	± 6.0%	Normal	1	1	1	± 6.0%	± 6.0%	∞
Axial isotropy	± 4.7%	Rectangular	√3	0.7	0.7	± 1.9%	± 1.9%	∞
Hemispherical isotropy	± 9.6%	Rectangular	√3	0.7	0.7	± 3.9%	± 3.9%	∞
Spatial resolution	± 0.0%	Rectangular	√3	1	1	± 0.0%	± 0.0%	∞
Boundary effects	± 1.0%	Rectangular	√3	1	1	± 0.6%	± 0.6%	∞
Probe linearity	± 4.7%	Rectangular	√3	1	1	± 2.7%	± 2.7%	∞
System detection limits	± 1.0%	Rectangular	√3	1	1	± 0.6%	± 0.6%	∞
Readout electronics	± 0.3%	Normal	1	1	1	± 0.3%	± 0.3%	∞
Response time	± 0.8%	Rectangular	√3	1	1	± 0.5%	± 0.5%	∞
Integration time	± 2.6%	Rectangular	√3	1	1	± 1.5%	± 1.5%	∞
RF ambient conditions	± 3.0%	Rectangular	√3	1	1	± 1.7%	± 1.7%	∞
Probe positioner	± 0.4%	Rectangular	√3	1	1	± 0.2%	± 0.2%	∞
Probe positioning	± 2.9%	Rectangular	√3	1	1	± 1.7%	± 1.7%	∞
Max. SAR evaluation	± 1.0%	Rectangular	√3	1	1	± 0.6%	± 0.6%	∞
Test Sample Related								
Device positioning	± 2.9%	Normal	1	1	1	± 2.9%	± 2.9%	145
Device holder uncertainty	± 3.6%	Normal	1	1	1	± 3.6%	± 3.6%	5
Power drift	± 5.0%	Rectangular	√3	1	1	± 2.9%	± 2.9%	∞
Phantom and Set-up								
Phantom uncertainty	± 4.0%	Rectangular	√3	1	1	± 2.3%	± 2.3%	∞
Liquid conductivity (target)	± 5.0%	Rectangular	√3	0.64	0.43	± 1.8%	± 1.2%	∞
Liquid conductivity (meas.)	± 2.5%	Normal	1	0.64	0.43	± 1.6%	± 1.1%	∞
Liquid permittivity (target)	± 5.0%	Rectangular	√3	0.6	0.49	± 1.7%	± 1.4%	∞
Liquid permittivity (meas.)	± 2.5%	Normal	1	0.6	0.49	± 1.5%	± 1.2%	∞
Combined Uncertainty	$u_c' = \sqrt{\sum_{i=1}^{21} c_i^2 u_i^2}$					± 10.9%	± 10.7%	387
Expanded Std. Uncertainty	$u_e = 2u_c$	Normal	**K=2**			**± 21.9%**	**± 21.4%**	

Table 7:Measurement uncertainties

5.2 Measurement uncertainty evaluation for system check

The overall combined measurement uncertainty of the measurement system is ± 9.5% (K=1).
The expanded uncertainty (k=2) is assessed to be ± 18.9%
This measurement uncertainty budget is suggested by IEEE P1528 and determined by Schmid & Partner Engineering AG. The breakdown of the individual uncertainties is as follows:

Error Sources	Uncertainty Value	Probability Distribution	Divi-sor	c_i 1g	c_i 10g	Standard Uncertainty 1g	Standard Uncertainty10g	v_i^2 or v_{eff}
Measurement System								
Probe calibration	± 6.0%	Normal	1	1	1	± 6.0%	± 6.0%	∞
Axial isotropy	± 4.7%	Rectangular	√3	1	1	± 2.7%	± 2.7%	∞
Hemispherical isotropy	± 9.6%	Rectangular	√3	0.7	0.7	± 0.0%	± 0.0%	∞
Boundary effects	± 1.0%	Rectangular	√3	1	1	± 0.6%	± 0.6%	∞
Probe linearity	± 4.7%	Rectangular	√3	1	1	± 2.7%	± 2.7%	∞
System detection limits	± 1.0%	Rectangular	√3	1	1	± 0.6%	± 0.6%	∞
Readout electronics	± 0.3%	Normal	1	1	1	± 0.3%	± 0.3%	∞
Response time	± 0.0%	Rectangular	√3	1	1	± 0.0%	± 0.0%	∞
Integration time	± 0.0%	Rectangular	√3	1	1	± 0.0%	± 0.0%	∞
RF ambient conditions	± 1.0%	Rectangular	√3	1	1	± 0.6%	± 0.6%	∞
Probe positioner	± 0.4%	Rectangular	√3	1	1	± 0.2%	± 0.2%	∞
Probe positioning	± 2.9%	Rectangular	√3	1	1	± 1.7%	± 1.7%	∞
Max. SAR evaluation	± 1.0%	Rectangular	√3	1	1	± 0.6%	± 0.6%	∞
Dipole								
Deviation of experimental dipole	± 5.5%	Rectangular	√3	1	1	± 3.2%	± 3.2%	∞
Dipole axis to liquid distance	± 2.0%	Rectangular	1	1	1	± 1.2%	± 1.2%	∞
Power drift	± 4.7%	Rectangular	√3	1	1	± 2.7%	± 2.7%	∞
Phantom and Set-up								
Phantom uncertainty	± 4.0%	Rectangular	√3	1	1	± 2.3%	± 2.3%	∞
Liquid conductivity (target)	± 5.0%	Rectangular	√3	0.64	0.43	± 1.8%	± 1.2%	∞
Liquid conductivity (meas.)	± 2.5%	Normal	1	0.64	0.43	± 1.6%	± 1.1%	∞
Liquid permittivity (target)	± 5.0%	Rectangular	√3	0.6	0.49	± 1.7%	± 1.4%	∞
Liquid permittivity (meas.)	± 2.5%	Normal	1	0.6	0.49	± 1.5%	± 1.2%	∞
Combined Uncertainty	$u_c' = \sqrt{\sum_{i=1}^{21} c_i^2 u_i^2}$					**± 9.5%**	**± 9.2%**	
Expanded Std. Uncertainty	$u_e = 2u_c$	Normal	**K=2**			**± 18.9%**	**± 18.4%**	

Table 8:Measurement uncertainties

6 SAR Test Configuration

6.1 GSM Test Configuration

SAR tests for GSM850 and GSM1900, a communication link is set up with a base station by air link. Using CMU200 the power lever is set to “5”and “0” in SAR of GSM850 and GSM1900. The tests in the band of GSM850 and GSM1900 are performed in the mode of GPRS/EGPRS function. Since the GPRS class is 10 for this EUT, it has at most 2 timeslots in uplink and at most 4 timeslots in downlink, the maximum total timeslot is 5. The EGPRS class is 10 for this EUT, it has at most 2 timeslots in uplink, and at most 4 timeslots in downlink, the maximum total timeslot is 5.

When SAR tests for EGPRS mode is necessary, GMSK modulation should be used to minimize SAR measurement error due to higher peak-to-average power (PAR) ratios inherent in 8-PSK.

According to specification 3GPP TS 51.010, the maximum power of the GSM can do the power reduction for the multi-slot.

The allowed power reduction in the multi-slot configuration is as following:

Number of timeslots in uplink assignment		Reduction of maximum output power (dB)		
Band	Time Slots	GPRS (GMSK）	EGPRS (GMSK)	EGPRS (8PSK)
GSM850	1 TX slot	0	0	0
	2 TX slots	2.5	2.5	0
GSM1900	1 TX slot	0	0	0
	2 TX slots	2.5	2.5	0

Table 9: The allowed power reduction in the multi-slot configuration of GSM

6.2 UMTS Test Configuration

1) RMC

As the SAR body tests for UMTS Band V/IV/II, we established the radio link through call processing. The maximum output power were verified on high, middle and low channels for each test band according to 3GPP TS 34.121 with the following configuration:

1) 12.2kbps RMC, 64,144,384 kbps RMC with TPC set to ‘all 1’.
2) Test loop Mode 1.

For the output power, the configurations for the DPCCH and $DPDCH_1$ are as followed (EUT do not support the $DPDCH_{2\text{-}n}$)

	Channel Bit Rate (kbps)	Channel Symbol Rate (ksps)	Spreading Factor	Spreading Code Number	Bits/Slot
DPCCH	15	15	256	0	10
$DPDCH_1$	15	15	256	64	10
	30	30	128	32	20
	60	60	64	16	40
	120	120	32	8	80
	240	240	16	4	160
	480	480	8	2	320
	960	960	4	1	640
$DPDCH_n$	960	960	4	1, 2, 3	640

SAR for body exposure configurations is measured using the 12.2 kbps RMC with the TPC bits configured to all “1s”. SAR for other spreading codes and multiple DPDCHn, when supported by the EUT, are not required when the maximum average outputs of each RF channel, for each spreading code and DPDCHn configuration, are less than ¼ dB higher than those measured in 12.2 kbps RMC.

2) HSDPA

SAR for body exposure configurations is measured according to the “Body SAR Measurements’’ procedures of 3G device. In addition, body SAR is also measured for HSDPA when the maximum average outputs of each RF channel with HSDPA active is at ¼ dB higher than that measured without HSDPA using 12.2kbps RMC or the maximum SAR 12.2kbps RMC is above 75% of the SAR limit. Body SAR for HSDPA is measured using an FRC with H-Set 1 in Sub-test 1 and a 12.2kbps RMC configured in Test Loop Mode 1, using the highest body SAR configuration in 12.2 kbps RMC without HSDPA.

HSDPA should be configured according to UE category of a test device. The number of HS-DSCH/HS-PDSCHs, HAPRQ processes, minimum inter-TTI interval, transport block sizes and RV coding sequence are defined by the H-set. To maintain a consistent test configuration and stable transmission condition, QPSK is used in the H-set for SAR testing. HS-DPCCH should be configured with a CQI feedback cycle of 4ms with a CQI repetition factor of 2 to maintain a constant rate of active CQI slots. The β_c and β_d gain factors for DPCCH and DPDCH were set according to the values in the below table, β_{hs} for HS-DPCCH is set automatically to the correct value when ΔACK, ΔNACK, ΔCQI = 8. The variation of the β_c /β_d ratio causes a power reduction at sub-tests 2 - 4.

Sub-test	β_c	β_d	β_d (SF)	β_c /β_d	β_{hs} (1)	CM(dB)(2)	MPR (dB)
1	2/15	15/15	64	2/15	4/15	0.0	0
2	12/15(3)	15/15(3)	64	12/15(3)	24/15	1.0	0
3	15/15	8/15	64	15/8	30/15	1.5	0.5
4	15/15	4/15	64	15/4	30/15	1.5	0.5

Note 1: △ACK, △NACK and △CQI = 8 $A_{hs} = \beta_{hs}/\beta_c = 30/15$ $\beta_{hs} = 30/15 * \beta_c$

Note 2 : CM=1 for β_c/β_d= 12/15, $\beta_{hs}/\beta_c = 24/15$. For all other combinations of DPDCH,DPCCH and HS-DPCCH the MPR is based on the relative CM difference. This is applicable for only UEs that support HSDPA in release 6 and later releases.

Note 3 : For subtest 2 the β_c/β_d ratio of 12/15 for the TFC during the measurement period (TF1, TF0) is achieved by setting the signalled gain factors for the reference TFC (TF1,TF1) to $\beta_c = 11/15$ and $\beta_d = 15/15$

Table 10: Sub-tests for UMTS Release 5 HSDPA

The measurements were performed with a Fixed Reference Channel (FRC) and H-Set 1 QPSK.

Parameter	Value
Nominal average inf. bit rate	534 kbit/s
Inter-TTI Distance	3 TTI’s
Number of HARQ Processes	2 Processes
Information Bit Payload	3202 Bits
MAC-d PDU size	336 Bits
Number Code Blocks	1 Block
Binary Channel Bits Per TTI	4800 Bits
Total Available SMLs in UE	19200 SMLs
Number of SMLs per HARQ Process	9600 SMLs
Coding Rate	0.67
Number of Physical Channel Codes	5

Table 11:settings of required H-Set 1 QPSK acc. to 3GPP 34.121

HS-DSCH Category	Maximum HS-DSCH Codes Received	Minimum Inter-TTI Interval	Maximum HS-DSCH Transport Block Bits/HS-DSCH TTI	Total Soft Channel Bits
1	5	3	7298	19200
2	5	3	7298	28800
3	5	2	7298	28800
4	5	2	7298	38400
5	5	1	7298	57600
6	5	1	7298	67200
7	10	1	14411	115200
8	10	1	14411	134400
9	15	1	25251	172800
10	15	1	27952	172800
11	5	2	3630	14400
12	5	1	3630	28800
13	15	1	34800	259200
14	15	1	42196	259200
15	15	1	23370	345600
16	15	1	27952	345600

Table 12:HSDPA UE category

3) HSUPA

Body SAR is also measured for HSDPA when the maximum average outputs of each RF channel with HSDPA active is at ¼ dB higher than that measured without HSDPA using 12.2kbps RMC or the maximum SAR 12.2kbps RMC is above 75% of the SAR limit. Body SAR for HSPA is measured with E-DCH Sub-test 5, using H-set 1 and QPSK for FRC and 12.2kbps RMC configured in Test Loop Mode 1 with power control algorithm 2, according to the highest body SAR configuration in 12.2 kbps RMC without HSPA.

Due to inner loop power control requirements in HSDPA, a commercial communication test set should be used for the output power and SAR tests. The 12.2 kbps RMC, FRC H-set 1 and E-DCH configurations for HSDPA should be configured according to the values indicated below as well as other applicable procedures described in the 'WCDMA Handset' and 'Release 5 HSDPA Data Device' sections of 3G device.

Sub-test	β_c	β_d	β_d (SF)	β_c/β_d	β_{hs}(1)	β_{ec}	β_{ed}	β_{ec} (SF)	β_{ed} (code)	CM(2) (dB)	MPR (dB)	AG(4) Index	E-TFCI
1	11/15(3)	15/15(3)	64	11/15(3)	22/15	209/225	1039/225	4	1	1.0	0.0	20	75
2	6/15	15/15	64	6/15	12/15	12/15	94/75	4	1	3.0	2.0	12	67
3	15/15	9/15	64	15/9	30/15	30/15	β_{ed1}:47/15 β_{ed2}:47/15	4	2	2.0	1.0	15	92
4	2/15	15/15	64	2/15	4/15	2/15	56/75	4	1	3.0	2.0	17	71
5	15/15(4)	15/15(4)	64	15/15(4)	30/15	24/15	134/15	4	1	1.0	0.0	21	81

Note 1: Δ ACK, Δ NACK and Δ CQI = 8 $A_{hs} = \beta_{hs}/\beta_c = 30/15$ $\beta_{hs} = 30/15 * \beta_c$

Note 2: CM = 1 for $\beta_c/\beta_d = 12/15$, $\beta_{hs}/\beta_c = 24/15$. For all other combinations of DPDCH, DPCCH, HS-DPCCH, E-DPDCH and E-DPCCH the MPR is based on the relative CM difference

Note 3 : For subtest 1 the β_c/β_d ratio of 11/15 for the TFC during the measurement period (TF1, TF0) is achieved by setting the signalled gain factors for the reference TFC (TF1,TF1) to $\beta_c = 10/15$ and $\beta_d = 15/15$

Note 4 : For subtest 5 the β_c/β_d ratio of 15/15 for the TFC during the measurement period (TF1, TF0) is achieved by setting the signalled gain factors for the reference TFC (TF1,TF1) to $\beta_c = 14/15$ and $\beta_d = 15/15$

Note 5 : Testing UE using E-DPDCH Physical Layer category 1 Sub-test 3 is not required according to TS 25.306 Table 5.1g

Note 6: β_{ed} can not be set directly; it is set by Absolute Grant Value.

Table 13:Subtests for UMTS Release 6 HSUPA

UE E-DCH Category	Maximum E-DCH Codes Transmitted	Number of HARQ Processes	E-DCH TTI(ms)	Minimum Speading Factor	Maximum E-DCH Transport Block Bits	Max Rate (Mbps)
1	1	4	10	4	7110	0.7296
2	2	8	2	4	2798	1.4592
	2	4	10	4	14484	
3	2	4	10	4	14484	1.4592
4	2	8	2	2	5772	2.9185
	2	4	10	2	20000	2.00
5	2	4	10	2	20000	2.00
6 (No DPDCH)	4	8	10	2SF2&2SF4	11484	5.76
	4	4	2		20000	2.00
7 (No DPDCH)	4	8	2	2SF2&2SF4	22996	?
	4	4	10		20000	?

NOTE: When 4 codes are transmitted in parallel, two codes shall be transmitted with SF2 and two with SF4.UE categories 1 to 6 support QPSK only. UE category 7 supports QPSK and 16QAM.(TS25.306-7.3.0).

Table 14:HSUPA UE category

6.3 WiFi Test Configuration

For the 802.11b/g SAR tests, a communication link is set up with the test mode software for WiFi mode test. The Absolute Radio Frequency Channel Number(ARFCN) is allocated to 1 ,6 and 11 respectively in the case of 2450 MHz.During the test,at the each test frequency channel, the EUT is operated at the RF continuous emission mode. Each channel should be tested at the lowest data rate.

802.11b/g operating modes are tested independently according to the service requirements in each frquency band. 802.11b/g modes are tested on channel 1, 6, 11; however,if output power reduction is necessary for channels 1 and/or 11 to meet restricted band requirements the highest output channel closest to each of these channels must be tested instead.

SAR is not required for 802.11g/n channels when the maximum average output power is less than 0.25dB higher than that measured on the corresponding 802.11b channels.

Mode	Band	GHz	Channel	"Default Test Channels"	
				802.11b	802.11g
802.11b/g	2.4 GHz	2.412	1#	√	△
		2.437	6	√	△
		2.462	11#	√	△

Notes:
√ = "default test channels"
△= possible 802.11g channels with maximum average output ¼ dB the "default test channels"
= when output power is reduced for channel 1 and /or 11 to meet restricted band requirements the highest output channels closest to each of these channels should be tested.

802.11 Test Channels per FCC Requirements

7 SAR Measurement Results

7.1 Conducted power measurements

For the measurements a Rohde & Schwarz Radio Communication Tester CMU 200 was used.

SAR drift measured at the same position in liquid before and after each SAR test as below 7.2 chapter.

Note: CMU200 measures GSM peak and average output power for active timeslots.For SAR the timebased average power is relevant. The difference in between depends on the duty cycle of the TDMA signal :

No. of timeslots	**1**	**2**	**3**	**4**
Duty Cycle	1:8.3	1:4.1	1:2.77	1:2.08
timebased avg. power compared to slotted avg. power	-9.19dB	-6.13dB	-4.42dB	-3.18dB

The signalling modes differ as follows:

mode	**coding scheme**	**modulation**
GPRS	CS1 to CS4	GMSK
EDGE	MCS1 to MCS4	GMSK
EDGE	MCS5 to MCS9	8PSK

Apart from modulation change (GMSK/8PSK) coding schemes differ in code rate without influence on the RF signal. Therefore one coding scheme per mode was selected for conducted power measurements.

7.1.1 Conducted power measurements GSM850

GSM850		Burst-Averaged output Power (dBm)			Division Factors	Frame-Averaged output Power (dBm)		
		128CH	190CH	251CH		128CH	190CH	251CH
GSM (CS)		32.92	32.91	32.86	-9.19	23.73	23.72	23.67
GPRS/ EDGE (GMSK)	1 Tx Slot	32.94	32.90	32.85	-9.19	23.75	23.71	23.66
	2 Tx Slots	31.07	31.12	31.07	-6.13	**24.94**	**24.99**	**24.94**
EDGE (8PSK)	1 Tx Slot	27.75	27.66	27.68	-9.19	18.56	18.47	18.49
	2 Tx Slots	27.51	27.52	27.46	-6.13	21.38	21.39	21.33

Table 15:Test results conducted power measurement GSM850

Note: 1. The conducted power of GSM850 is measured with RMS detector.

2. Frame-averaged output power was calculated from the measured burst-averaged output power by converting the slot powers into linear units and calculating the energy over 8 timesolts.

3. Per KDB 941225 D03v01,the bolded GPRS mode was selected for SAR testing according to the highest frame –averaged output power table.

7.1.2 Conducted power measurements GSM1900

GSM1900		Burst-Averaged output Power (dBm)			Division Factors	Frame-Averaged output Power (dBm)		
		512CH	661CH	810CH		512CH	661CH	810CH
GSM (CS)		30.22	30.11	30.47	-9.19	21.03	20.92	21.28
GPRS/ EDGE (GMSK)	1 Tx Slot	30.23	30.10	30.42	-9.19	21.04	20.91	21.23
	2 Tx Slots	27.62	27.38	27.48	-6.13	**21.49**	**21.25**	**21.35**
EDGE (8PSK)	1 Tx Slot	26.06	25.97	26.02	-9.19	16.87	16.78	16.83
	2 Tx Slots	25.86	25.85	25.83	-6.13	19.73	19.72	19.70

Table 16:Test results conducted power measurement GSM1900

Note: 1. The conducted power of GSM1900 is measured with RMS detector.

2. Frame-averaged output power was calculated from the measured burst-averaged output power by converting the slot powers into linear units and calculating the energy over 8 timesolts.

3 . Per KDB 941225 D03v01,the bolded GPRS mode was selected for SAR testing according to the highest frame –averaged output power table.

7.1.3 Conducted power measurements UMTS Band V

UMTS Band V		Conducted Power (dBm)		
		4132CH	4182CH	4233CH
WCDMA	12.2kbps RMC	24.22	24.13	24.02
	64kbps RMC	24.22	24.16	24.06
	144kbps RMC	24.26	24.20	24.00
	384kbps RMC	24.27	24.15	24.05
HSDPA	Subtest 1	23.21	23.14	23.00
	Subtest 2	22.97	22.82	22.85
	Subtest 3	22.37	22.27	22.26
	Subtest 4	22.39	22.22	22.23
HSUPA	Subtest 1	22.83	22.73	22.25
	Subtest 2	21.95	21.67	21.69
	Subtest 3	21.10	21.80	21.54
	Subtest 4	21.96	21.90	21.82
	Subtest 5	22.57	22.72	22.21

Table 17:Test results conducted power measurement UMTS Band V

Note:

1) The conducted power of UMTS Band V is measured with RMS detector.

2) Per KDB941225 D01v02, when maximum output of each RF channel with HSDPA/HSUPA active is ≤ ¼ dB higher than without HSDPA/HSUPA using 12.2 kbps RMC and maximum SAR for 12.2 kbps RMC is ≤ 75% of SAR limit, SAR evaluation for HSDPA/HSUPA is not required.

7.1.4 Conducted power measurements UMTS Band IV

UMTS Band IV		Conducted Power (dBm)		
		1312CH	1413CH	1513CH
WCDMA	12.2kbps RMC	23.66	23.65	23.52
	64kbps RMC	23.69	23.60	23.53
	144kbps RMC	23.65	23.66	23.52
	384kbps RMC	23.69	23.65	23.60
HSDPA	Subtest 1	22.62	22.67	22.48
	Subtest 2	22.46	22.43	22.33
	Subtest 3	21.85	21.84	21.70
	Subtest 4	21.87	21.81	21.74
HSUPA	Subtest 1	22.13	22.19	22.28
	Subtest 2	21.39	21.34	21.30
	Subtest 3	20.81	21.40	20.83
	Subtest 4	21.61	21.57	21.59
	Subtest 5	22.22	21.87	22.14

Table 18:Test results conducted power measurement UMTS Band IV

Note:

1) The conducted power of UMTS Band IV is measured with RMS detector.

2) Per KDB941225 D01v02, when maximum output of each RF channel with HSDPA/HSUPA active is ≤ ¼ dB higher than without HSDPA/HSUPA using 12.2 kbps RMC and maximum SAR for 12.2 kbps RMC is ≤ 75% of SAR limit, SAR evaluation for HSDPA/HSUPA is not required.

7.1.5 Conducted power measurements UMTS Band II

UMTS Band II		Conducted Power (dBm)		
		9262CH	9400CH	9538CH
WCDMA	12.2kbps RMC	23.70	23.54	23.70
	64kbps RMC	23.76	23.48	23.62
	144kbps RMC	23.75	23.48	23.57
	384kbps RMC	23.73	23.53	23.52
HSDPA	Subtest 1	22.65	22.44	22.80
	Subtest 2	22.61	22.33	23.30
	Subtest 3	21.85	21.67	23.15
	Subtest 4	21.83	21.68	23.07
HSUPA	Subtest 1	21.81	22.14	21.56
	Subtest 2	21.39	21.15	21.07
	Subtest 3	21.40	20.40	21.07
	Subtest 4	21.46	21.42	21.73
	Subtest 5	21.95	21.62	21.89

Table 19:Test results conducted power measurement UMTS Band II

Note:

1) The conducted power of UMTS Band II is measured with RMS detector.

2) Per KDB941225 D01v02, when maximum output of each RF channel with HSDPA/HSUPA active is ≤ ¼ dB higher than without HSDPA/HSUPA using 12.2 kbps RMC and maximum SAR for 12.2 kbps RMC is ≤ 75% of SAR limit, SAR evaluation for HSDPA/HSUPA is not required.

7.1.6 Conducted power measurements WiFi&BT

The average output power of BT antenna is as following:

BT 2450MHz	Average Conducted Power (dBm)		
	0CH	39CH	78CH
DH5	2.67	**3.37**	3.10
2DH5	1.24	2.56	2.02
3DH5	1.52	2.48	2.10

Table 20:Test results conducted power measurement BT.

Note: The conducted power of BT is measured with RMS detector.

The average output power of WiFi antenna is as following:

Wi-Fi 2450MHz	Channel	Average Power (dBm) for Data Rates (Mbps)							
		1	2	5.5	11	/	/	/	/
802.11b	1	15.73	15.77	15.88	15.70	/	/	/	/
	6	15.81	15.82	15.93	15.92	/	/	/	/
	11	15.89	15.92	15.94	15.93	/	/	/	/
802.11g	Channel	6	9	12	18	24	36	48	54
	1	11.98	11.67	11.04	11.06	10.70	9.83	9.77	9.52
	6	12.05	11.87	11.16	11.25	10.84	10.04	10.02	9.62
	11	12.16	11.94	11.23	11.31	10.98	10.10	10.11	9.74
802.11n (HT20,800ns)	Channel	6.5	13	19.5	26	39	52	58.5	65
	1	10.13	9.21	9.25	8.78	8.06	8.09	7.79	7.45
	6	10.27	9.41	9.47	8.95	8.23	8.26	7.96	7.57
	11	10.39	9.52	9.60	9.03	8.28	8.31	8.04	7.68

Table 21:Test results conducted power measurement WiFi .

Note:

1) The Average conducted power of WiFi is measured with RMS detector.

2) Per KDB248227, for each frequency band, testing at higher data rates and higher order modulations is not required when the maximum average output power for each of these configurations is less than 1/4dB higher than those measured at the lowest data rate.

7.2 SAR measurement Result

1) Per KDB447498 D01v05r01,testing of other required channels within the operating mode of a frequency band is not required when the reported(Scaled) SAR for the middle channel or highest output power channels is ⩽0.8W/kg. When the maximum output power variation across the required test channels is > ½ dB, instead of the middle channel, the highest output power channel must be used.
2) Per KDB865664 D01v01r01,for each frequency band,repeated SAR measurement is required only when the measured SAR is ⩾0.8W/Kg; if the deviation among the repeated measurement is ⩽20%,and the measured SAR <1.45W/Kg,only one repeated measurement is required.
3) Per KDB648474 D04v01r01,SAR is evaluated without a headset connected to the device.When the standalone reported SAR is ⩽1.2 W/kg, no additional SAR evaluations using a headset are required.
4) Per KDB248227, for each frequency band of WiFi, SAR test at higher data rates and higher order modulations is not required when the maximum average output power for each of these configurations is less than 1/4dB higher than those measured at the lowest data rate.
5) Per KDB447498 D01v05r01,Body-worn accessory testing is typically associated with voice operations. Therefore, GSM voice was evaluated for body-worn SAR.
6) Per KDB941225 D01v02, when maximum output of each RF channel with HSDPA/HSUPA active is ≤ ¼ dB higher than without HSDPA/HSUPA using 12.2 kbps RMC and maximum SAR for 12.2 kbps RMC is ⩽ 75% of SAR limit, SAR evaluation for HSDPA/HSUPA is not required.
7) Per KDB941225 D06v01r01, the DUT Dimension is bigger than 9 cm x 5 cm, so 10mm is chosen as Hotspot mode. When the antenna-to-edge distance is greater than 2.5cm,such position does not to be tested.
8) All measurement SAR result is scaled-up to account for tune-up tolerance is compliant

7.2.1 SAR measurement Result of GSM850

Test Position of Head	Test channel /Frequency	Test Mode	SAR Value (W/kg)		Power Drift (dB)	Conducted Power (dBm)	Tune-up Power (dBm)	Scaled SAR1-g (W/kg)	Liquid Temp.
			1-g	10-g					
Test data with the battery 1#									
Left Hand Touched	190/836.6	GSM	0.258	0.193	0.050	32.91	33.50	0.296	21.2°C
Left Hand Tilted 15°	190/836.6	GSM	0.191	0.145	0.070	32.91	33.50	0.219	21.2°C
Right Hand Touched	190/836.6	GSM	0.260	0.199	-0.090	32.91	33.50	0.298	21.2°C
Right Hand Tilted 15°	190/836.6	GSM	0.188	0.145	0.010	32.91	33.50	0.215	21.2°C
Tested at worst position with the battery 2#									
Right Hand Touched	190/836.6	GSM	0.270	0.205	0.130	32.91	33.50	**0.309**	21.2°C

Table 22: Test results head SAR GSM850

Test Position of Body-Worn with 15mm	Test channel /Frequency	Test Mode	SAR Value (W/kg)		Power Drift (dB)	Conducted Power (dBm)	Tune-up Power (dBm)	Scaled SAR1-g (W/kg)	Liquid Temp.
			1-g	10-g					
Test data with the battery 1#									
Front side	190/836.6	GSM	0.312	0.239	-0.020	32.91	33.50	0.357	21.2°C
Back side	190/836.6	GSM	0.449	0.342	-0.040	32.91	33.50	0.514	21.2°C
Tested at worst position with the battery 2#									
Back side	190/836.6	GSM	0.456	0.346	-0.070	32.91	33.50	**0.522**	21.2°C

Table 23:Test results Body-Worn SAR GSM850

Test Position of Hotspot with 10mm	Test channel /Frequency	Test Mode	SAR Value (W/kg)		Power Drift (dB)	Conducted Power (dBm)	Tune-up Power (dBm)	Scaled SAR1-g (W/kg)	Liquid Temp.
			1-g	10-g					
Test data with the battery 1#									
Front side	190/836.6	GPRS 2TS	0.438	0.339	-0.190	31.12	31.50	0.478	21.2°C
Back side	190/836.6	GPRS 2TS	0.683	0.521	0.030	31.12	31.50	0.745	21.2°C
Left side	190/836.6	GPRS 2TS	0.482	0.335	0.000	31.12	31.50	0.526	21.2°C
Right side	190/836.6	GPRS 2TS	0.490	0.341	-0.010	31.12	31.50	0.535	21.2°C
Bottom side	190/836.6	GPRS 2TS	0.042	0.025	-0.010	31.12	31.50	0.046	21.2°C
Tested at worst position with the battery 2#									
Back side	190/836.6	GPRS 2TS	0.703	0.537	-0.060	31.12	31.50	**0.767**	21.2°C

Table 24:Test results Hotspot SAR GSM850

Note:

1) Per KDB941225 D06,for the antenna-to-edge distance is greater than 2.5 cm,so the top side does not need to be tested.

7.2.2 SAR measurement Result of GSM1900

Test Position of Head	Test channel /Frequency	Test Mode	SAR Value (W/kg)		Power Drift (dB)	Conducted Power (dBm)	Tune-up Power (dBm)	Scaled SAR1-g (W/kg)	Liquid Temp.
			1-g	10-g					
Test data with the battery 1#									
Left Hand Touched	661/1880	GSM	0.275	0.173	0.010	30.11	30.50	0.301	21.4°C
Left Hand Tilted 15°	661/1880	GSM	0.153	0.097	0.060	30.11	30.50	0.167	21.4°C
Right Hand Touched	661/1880	GSM	0.314	0.200	0.070	30.11	30.50	**0.344**	21.4°C
Right Hand Tilted 15°	661/1880	GSM	0.163	0.091	0.030	30.11	30.50	0.178	21.4°C
Tested at worst position with the battery 2#									
Right Hand Touched	661/1880	GSM	0.313	0.198	0.090	30.11	30.50	0.342	21.4°C

Table 25:Test results head SAR GSM1900

Test Position of Body-Worn with 15mm	Test channel /Frequency	Test Mode	SAR Value (W/kg)		Power Drift (dB)	Conducted Power (dBm)	Tune-up Power (dBm)	Scaled SAR1-g (W/kg)	Liquid Temp.
			1-g	10-g					
Test data with the battery 1#									
Front side	661/1880	GSM	0.275	0.177	-0.060	30.11	30.50	0.301	21.4°C
Back side	661/1880	GSM	0.335	0.211	0.020	30.11	30.50	**0.366**	21.4°C
Tested at worst position with the battery 2#									
Back side	661/1880	GSM	0.331	0.208	-0.050	30.11	30.50	0.362	21.4°C

Table 26:Test results Body-Worn SAR GSM1900

Test Position of Hotspot with 10mm	Test channel /Frequency	Test Mode	SAR Value (W/kg)		Power Drift (dB)	Conducted Power (dBm)	Tune-up Power (dBm)	Scaled SAR1-g (W/kg)	Liquid Temp.
			1-g	10-g					
Test data with the battery 1#									
Front side	661/1880	GPRS 2TS	0.440	0.277	-0.110	27.38	28.00	0.508	21.4°C
Back side	661/1880	GPRS 2TS	0.579	0.357	-0.030	27.38	28.00	**0.668**	21.4°C
Left side	661/1880	GPRS 2TS	0.187	0.106	-0.110	27.38	28.00	0.216	21.4°C
Right side	661/1880	GPRS 2TS	0.124	0.074	0.070	27.38	28.00	0.143	21.4°C
Bottom side	661/1880	GPRS 2TS	0.336	0.191	0.090	27.38	28.00	0.388	21.4°C
Tested at worst position with the battery 2#									
Back side	661/1880	GPRS 2TS	0.520	0.320	-0.180	27.38	28.00	0.600	21.4°C

Table 27:Test results Hotspot SAR GSM1900

Note:

1) Per KDB941225 D06,for the antenna-to-edge distance is greater than 2.5 cm,so the top side does not need to be tested.

7.2.3 SAR measurement Result of UMTS Band V

Test Position of Head	Test channel /Frequency	Test Mode	SAR Value (W/kg)		Power Drift (dB)	Conducted Power (dBm)	Tune-up Power (dBm)	Scaled SAR1-g (W/kg)	Liquid Temp.
			1-g	10-g					
Test data with the battery 1#									
Left Hand Touched	4182/836.4	RMC	0.201	0.151	0.180	24.13	25.00	0.246	21.4°C
Left Hand Tilted 15°	4182/836.4	RMC	0.168	0.127	0.040	24.13	25.00	0.205	21.4°C
Right Hand Touched	4182/836.4	RMC	0.240	0.183	0.060	24.13	25.00	**0.293**	21.4°C
Right Hand Tilted 15°	4182/836.4	RMC	0.166	0.128	0.130	24.13	25.00	0.203	21.4°C
Tested at worst position with the battery 2#									
Right Hand Touched	4182/836.4	RMC	0.234	0.179	0.140	24.13	25.00	0.286	21.4°C

Table 28:Test results head SAR UMTS Band V

Test Position of Body-Worn with 15mm	Test channel /Frequency	Test Mode	SAR Value (W/kg)		Power Drift (dB)	Conducted Power (dBm)	Tune-up Power (dBm)	Scaled SAR1-g (W/kg)	Liquid Temp.
			1-g	10-g					
Test data with the battery 1#									
Front side	4182/836.4	RMC	0.274	0.210	-0.060	24.13	25.00	0.335	21.4°C
Back side	4182/836.4	RMC	0.417	0.317	0.050	24.13	25.00	**0.509**	21.4°C
Tested at worst position with the battery 2#									
Back side	4182/836.4	RMC	0.398	0.303	-0.040	24.13	25.00	0.486	21.4°C

Table 29:Test results Body-worn SAR UMTS Band V

Test Position of Hotspot with 10mm	Test channel /Frequency	Test Mode	SAR Value (W/kg)		Power Drift (dB)	Conducted Power (dBm)	Tune-up Power (dBm)	Scaled SAR1-g (W/kg)	Liquid Temp.
			1-g	10-g					
Test data with the battery 1#									
Front side	4182/836.4	RMC	0.315	0.244	-0.030	24.13	25.00	0.385	21.4°C
Back side	4182/836.4	RMC	0.518	0.396	-0.030	24.13	25.00	**0.633**	21.4°C
Left side	4182/836.4	RMC	0.331	0.230	-0.060	24.13	25.00	0.404	21.4°C
Right side	4182/836.4	RMC	0.359	0.250	0.080	24.13	25.00	0.439	21.4°C
Bottom side	4182/836.4	RMC	0.032	0.019	0.110	24.13	25.00	0.039	21.4°C
Tested at worst position with the battery 2#									
Back side	4182/836.4	RMC	0.496	0.379	0.020	24.13	25.00	0.606	21.4°C

Table 30:Test results Hotspot SAR UMTS Band V

Note:

1) Per KDB941225 D06,for the antenna-to-edge distance is greater than 2.5 cm,so the top side does not need to be tested.

7.2.4 SAR measurement Result of UMTS Band IV

Test Position of Head	Test channel /Frequency	Test Mode	SAR Value (W/kg)		Power Drift (dB)	Conducted Power (dBm)	Tune-up Power (dBm)	Scaled SAR1-g (W/kg)	Liquid Temp.
			1-g	10-g					
Test data with the battery 1#									
Left Hand Touched	1413/1732.6	RMC	0.404	0.262	0.070	23.65	25.00	0.551	21.4°C
Left Hand Tilted 15°	1413/1732.6	RMC	0.246	0.163	-0.060	23.65	25.00	0.336	21.4°C
Right Hand Touched	1413/1732.6	RMC	0.392	0.255	0.020	23.65	25.00	0.535	21.4°C
Right Hand Tilted 15°	1413/1732.6	RMC	0.200	0.117	0.120	23.65	25.00	0.273	21.4°C
Tested at worst position with the battery 2#									
Left Hand Touched	1413/1732.6	RMC	0.408	0.262	-0.010	23.65	25.00	**0.557**	21.4°C

Table 31:Test results head SAR UMTS Band IV

Test Position of Body-Worn with 15mm	Test channel /Frequency	Test Mode	SAR Value (W/kg)		Power Drift (dB)	Conducted Power (dBm)	Tune-up Power (dBm)	Scaled SAR1-g (W/kg)	Liquid Temp.
			1-g	10-g					
Test data with the battery 1#									
Front side	1413/1732.6	RMC	0.382	0.247	-0.030	23.65	25.00	0.521	21.4°C
Back side	1413/1732.6	RMC	0.441	0.278	-0.120	23.65	25.00	**0.602**	21.4°C
Tested at worst position with the battery 2#									
Back side	1413/1732.6	RMC	0.426	0.269	0.040	23.65	25.00	0.581	21.4°C

Table 32:Test results Body-Worn SAR UMTS Band IV

Test Position of Hotspot with 10mm	Test channel /Frequency	Test Mode	SAR Value (W/kg)		Power Drift (dB)	Conducted Power (dBm)	Tune-up Power (dBm)	Scaled SAR1-g (W/kg)	Liquid Temp.
			1-g	10-g					
Test data with the battery 1#									
Front side	1413/1732.6	RMC	0.584	0.372	-0.070	23.65	25.00	0.797	21.4°C
Back side	1413/1732.6	RMC	0.749	0.459	0.160	23.65	25.00	1.022	21.4°C
Back side	1312/1712.4	RMC	0.817	0.501	0.080	23.66	25.00	1.112	21.4°C
Back side-repeated*	1312/1712.4	RMC	0.820	0.506	-0.040	23.66	25.00	1.116	21.4°C
Back side	1513/1752.6	RMC	0.802	0.490	0.140	23.52	25.00	1.128	21.4°C
Left side	1413/1732.6	RMC	0.274	0.158	-0.030	23.65	25.00	0.374	21.4°C
Right side	1413/1732.6	RMC	0.131	0.079	-0.010	23.65	25.00	0.179	21.4°C
Bottom side	1413/1732.6	RMC	0.487	0.283	-0.060	23.65	25.00	0.665	21.4°C
Tested at worst position with the battery 2#									
Back side	1513/1752.6	RMC	0.805	0.491	0.020	23.52	25.00	**1.132**	21.4°C

Table 33:Test results Hotspot SAR UMTS Band IV

Note:

1) * - repeated at the highest SAR measurement according to the FCC KDB 865664
2) Per KDB941225 D06,for the antenna-to-edge distance is greater than 2.5 cm,so the top side does not need to be tested.

7.2.5 SAR measurement Result of UMTS Band II

Test Position of Head	Test channel /Frequency	Test Mode	SAR Value (W/kg)		Power Drift (dB)	Conducted Power (dBm)	Tune-up Power (dBm)	Scaled SAR1-g (W/kg)	Liquid Temp.
			1-g	10-g					
Test data with the battery 1#									
Left Hand Touched	9400/1880	RMC	0.435	0.276	-0.020	23.54	25.00	0.609	21.4°C
Left Hand Tilted 15°	9400/1880	RMC	0.249	0.156	0.000	23.54	25.00	0.348	21.4°C
Right Hand Touched	9400/1880	RMC	0.502	0.319	0.000	23.54	25.00	0.703	21.4°C
Right Hand Tilted 15°	9400/1880	RMC	0.264	0.149	-0.050	23.54	25.00	0.369	21.4°C
Tested at worst position with the battery 2#									
Right Hand Touched	9400/1880	RMC	0.521	0.329	-0.070	23.54	25.00	**0.729**	21.4°C

Table 34:Test results head SAR UMTS Band II

Test Position of Body-Worn with 15mm	Test channel /Frequency	Test Mode	SAR Value (W/kg)		Power Drift (dB)	Conducted Power (dBm)	Tune-up Power (dBm)	Scaled SAR1-g (W/kg)	Liquid Temp.
			1-g	10-g					
Test data with the battery 1#									
Front side	9400/1880	RMC	0.402	0.261	-0.120	23.54	25.00	0.563	21.4°C
Back side	9400/1880	RMC	0.473	0.302	-0.120	23.54	25.00	0.662	21.4°C
Tested at worst position with the battery 2#									
Back side	9400/1880	RMC	0.522	0.328	0.040	23.54	25.00	**0.731**	21.4°C

Table 35:Test results Body-Worn SAR UMTS Band II

Test Position of Hotspot with 10mm	Test channel /Frequency	Test Mode	SAR Value (W/kg)		Power Drift (dB)	Conducted Power (dBm)	Tune-up Power (dBm)	Scaled SAR1-g (W/kg)	Liquid Temp.
			1-g	10-g					
Test data with the battery 1#									
Front side	9400/1880	RMC	0.686	0.435	-0.120	23.54	24.50	0.856	21.4°C
Front side	9262/1852.4	RMC	0.763	0.485	-0.100	23.70	24.50	0.917	21.4°C
Front side	9538/1907.6	RMC	0.718	0.453	-0.010	23.70	24.50	0.863	21.4°C
Back side	9400/1880	RMC	0.889	0.557	-0.010	23.54	24.50	1.109	21.4°C
Back side	9262/1852.4	RMC	0.981	0.615	0.040	23.70	24.50	1.179	21.4°C
Back side-repeated*	9262/1852.4	RMC	0.978	0.612	0.010	23.70	24.50	**1.176**	21.4°C
Back side	9538/1907.6	RMC	0.927	0.577	0.090	23.70	24.50	1.114	21.4°C
Left side	9400/1880	RMC	0.304	0.172	0.040	23.54	24.50	0.379	21.4°C
Right side	9400/1880	RMC	0.211	0.130	-0.060	23.54	24.50	0.263	21.4°C
Bottom side	9400/1881	RMC	0.489	0.284	-0.040	23.54	24.50	0.610	21.4°C
Tested at worst position with the battery 2#									
Back side	9262/1852.4	RMC	0.934	0.576	-0.040	23.70	24.50	1.123	21.4°C

Table 36:Test results Hotspot SAR UMTS Band II

Note:

1) * - repeated at the highest SAR measurement according to the FCC KDB 865664
2) Per KDB941225 D06,for the antenna-to-edge distance is greater than 2.5 cm,so the top side does not need to be tested.

7.2.6 SAR measurement Result of WiFi

Test Position of Head	Test channel /Frequency	Test Mode	SAR Value (W/kg)		Power Drift (dB)	Conducted Power (dBm)	Tune-up Power (dBm)	Scaled SAR1-g (W/kg)	Liquid Temp.
			1-g	10-g					
Test data with the battery 1#									
Left Hand Touched	11/2462	802.11 b	0.103	0.052	0.130	15.89	16.00	**0.106**	21.4°C
Left Hand Tilted 15°	11/2462	802.11 b	0.087	0.042	0.140	15.89	16.00	0.089	21.4°C
Right Hand Touched	11/2462	802.11 b	0.079	0.042	0.140	15.89	16.00	0.081	21.4°C
Right Hand Tilted 15°	11/2462	802.11 b	0.087	0.044	0.120	15.89	16.00	0.089	21.4°C
Tested at worst position with the battery 2#									
Left Hand Touched	11/2462	802.11 b	0.088	0.043	0.110	15.89	16.00	0.090	21.4°C

Table 37: Test results head SAR WiFi 2450MHz

Test Position of Body-Worn with 15mm	Test channel /Frequency	Test Mode	SAR Value (W/kg)		Power Drift (dB)	Conducted Power (dBm)	Tune-up Power (dBm)	Scaled SAR1-g (W/kg)	Liquid Temp.
			1-g	10-g					
Test data with the battery 1#									
Front side	11/2462	802.11 b	0.014	0.008	0.060	15.89	16.00	**0.014**	21.4°C
Back side	11/2462	802.11 b	0.013	0.007	-0.160	15.89	16.00	0.013	21.4°C
Tested at worst position with the battery 2#									
Front side	11/2462	802.11 b	0.011	0.006	0.070	15.89	16.00	0.012	21.4°C

Table 38: Test results Body-worn SAR WiFi 2450MHz

Test Position of Hotspot with 10mm	Test channel /Frequency	Test Mode	SAR Value (W/kg)		Power Drift (dB)	Conducted Power (dBm)	Tune-up Power (dBm)	Scaled SAR1-g (W/kg)	Liquid Temp.
			1-g	10-g					
Test data with the battery 1#									
Front side	11/2462	802.11 b	0.022	0.012	-0.120	15.89	16.00	0.022	21.4°C
Back side	11/2462	802.11 b	0.026	0.014	0.110	15.89	16.00	0.027	21.4°C
Right side	11/2462	802.11 b	0.017	0.008	-0.070	15.89	16.00	0.017	21.4°C
Top side	11/2462	802.11 b	0.044	0.022	0.010	15.89	16.00	**0.045**	21.4°C
Tested at worst position with the battery 2#									
Top side	11/2462	802.11 b	0.033	0.017	-0.020	15.89	16.00	0.034	21.4°C

Table 39: Test results Hotspot SAR WiFi 2450MHz

Note:

1）Per KDB941225 D06,for the antenna-to-edge distance is greater than 2.5 cm,so the Bottom&Left sides does not need to be tested.

7.3 Multiple Transmitter Evaluation

The following tables list information which is relevant for the decision if a simultaneous transmit evaluation is necessary according to FCC KDB 447498D01.

The location of the antennas inside mobile phone is shown as below picture:

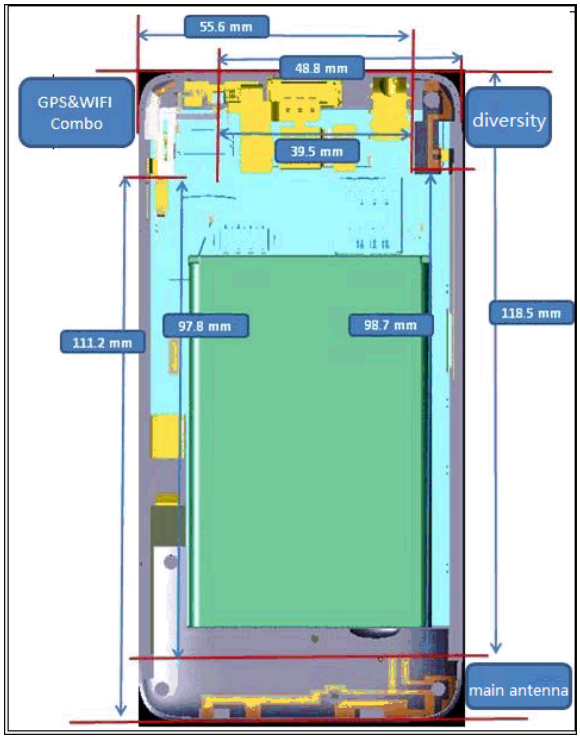

Note: Diversity antenna is used to improve the acceptance of performance of the main antenna, does not have a transmitter function.

7.3.1 Stand-alone SAR test exclusion

The 1-g SAR test exclusion thresholds for 100 MHz to 6 GHz at test separation distances ≤ 50 mm are determined by:

[(max. power of channel, including tune-up tolerance, mW)/(min. test separation distance, mm)] ·[√f(GHz)] ≤ 3.0 for 1-g SAR, where:

- f(GHz) is the RF channel transmit frequency in GHz
- Power and distance are rounded to the nearest mW and mm before calculation
- The result is rounded to one decimal place for comparison

When the minimum test separation distance is < 5 mm, a distance of 5 mm is applied to determine SAR test exclusion.

a) Head position

Mode	P_{max} (dBm)*	P_{max} (mW)	Distance (mm)	f (GHz)	Calculation Result	Exclusion threshold	SAR test exclusion
GSM850	33.50	2238.72	5	0.850	412.80	3.00	No
GSM1900	30.50	1122.02	5	1.900	309.32	3.00	No
UMTS Band V	25.00	316.23	5	0.850	58.31	3.00	No
UMTS Band IV	25.00	316.23	5	1.700	82.46	3.00	No
UMTS Band II	25.00	316.23	5	1.900	87.18	3.00	No
WiFi	16.00	39.81	5	2.450	12.46	3.00	No
BT	4.50	2.82	5	2.450	0.88	3.00	Yes

Table 40: Standalone SAR test exclusion in head position

Note: * - maximum possible output power declared by manufacturer

b) Body-Worn position

Mode	P_{max} (dBm)*	P_{max} (mW)	Distance (mm)	f (GHz)	Calculation Result	Exclusion threshold	SAR test exclusion
GSM850	33.50	2238.72	15	0.850	137.60	3.00	No
GSM1900	30.50	1122.02	15	1.900	103.11	3.00	No
UMTS Band V	25.00	316.23	15	0.850	19.44	3.00	No
UMTS Band IV	25.00	316.23	15	1.700	27.49	3.00	No
UMTS Band II	25.00	316.23	15	1.900	29.06	3.00	No
WiFi	16.00	39.81	15	2.450	4.15	3.00	No
BT	4.50	2.82	15	2.450	0.29	3.00	Yes

Table 41: Standalone SAR test exclusion in body-worn position

Note: * - maximum possible output power declared by manufacturer

c) Hotspot position

Mode	P_{max} (dBm)*	P_{max} (mW)	Distance (mm)	f (GHz)	Calculation Result	Exclusion threshold	SAR test exclusion
GSM850	31.50	1412.54	10	0.850	130.23	3.00	No
GSM1900	28.00	630.96	10	1.900	86.97	3.00	No
UMTS Band V	25.00	316.23	10	0.850	29.15	3.00	No
UMTS Band IV	25.00	316.23	10	1.700	41.23	3.00	No
UMTS Band II	25.00	316.23	10	1.900	43.59	3.00	No
WiFi	16.00	39.81	15	2.450	4.15	3.00	No
BT	4.50	2.82	15	2.450	0.29	3.00	Yes

Table 42: Standalone SAR test exclusion in hotspot position

Note: * - maximum possible output power declared by manufacturer

When standalone SAR test exclusion applies to an antenna that transmits simultaneously with other antennas, the standalone SAR must be estimated according to following to determine simultaneous transmission SAR test exclusion:

(max. power of channel, including tune-up tolerance, mW)/(min. test separation distance, mm)] • [√f(GHz)/x] W/kg for test separation distances ≤ 50 mm,where x = 7.5 for 1-g SAR.

When the minimum test separation distance is < 5 mm, a distance of 5 mm is applied to determine SAR test exclusion

Mode	Position	P_{max} (dBm)*	P_{max} (mW)	Distance (mm)	f (GHz)	X	Estimated SAR (W/Kg)*
BT	Head	4.50	2.82	5	2.450	7.5	0.118
BT	Body	4.50	2.82	15	2.450	7.5	0.039
BT	Body	4.50	2.82	10	2.450	7.5	0.059

Table 43: Estimated SAR calculation for BT

Note: * - maximum possible output power declared by manufacturer

7.3.2 Simultaneous Transmission Possibilities

The Simultaneous Transmission Possibilities are as below:

Simultaneous Transmission Possibilities				
Simultaneous Tx Combination	**Configuration**	**Head**	**Body-Worn**	**Hotspot**
1	GSM 850/1900(Voice)+ WiFi 2.4G	Yes	Yes	N/A
2	GPRS/EDGE 850/1900 (Data)+ WiFi 2.4G	N/A	N/A	Yes
3	GSM 850/1900(Voice)+BT	Yes	Yes	N/A
4	GPRS/EDGE 850/1900 (Data)+BT	N/A	N/A	Yes
5	UMTS Band II/IV/V(Voice)+ WiFi 2.4G	Yes	Yes	N/A
6	UMTS Band II/IV/V(Data)+ WiFi 2.4G	N/A	N/A	Yes
7	UMTS Band II/IV/V(Voice)+ BT	Yes	Yes	N/A
8	UMTS Band II/IV/V(Data)+ BT	N/A	N/A	Yes

Table 44: Simultaneous Transmission Possibilities

Note:

1) The device does not support simultaneous BT and WiFi, because they share the same antenna.

2) The device does not support DTM function.

7.3.3 SAR Summation Scenario

Test Position		Scaled SAR_{Max}		Σ1-g SAR	SPLSR	Remark
		GSM850	WiFi			
Head	Left Hand Touched	0.309	0.106	0.415	N/A	N/A
	Left Hand Tilted 15°	0.219	0.089	0.308	N/A	N/A
	Right Hand Touched	0.298	0.081	0.379	N/A	N/A
	Right Hand Tilted 15°	0.215	0.089	0.304	N/A	N/A
Body-Worn	Front side	0.357	0.014	0.371	N/A	N/A
	Back side	0.522	0.013	0.535	N/A	N/A
Hotspot	Front side	0.478	0.022	0.500	N/A	N/A
	Back side	0.767	0.027	0.794	N/A	N/A
	Left side	0.526	0.000	0.526	N/A	N/A
	Right side	0.535	0.017	0.552	N/A	N/A
	Top side	0.000	0.045	0.045	N/A	N/A
	Bottom side	0.046	0.000	0.046	N/A	N/A

Table 45: Simultaneous Tx Combination of GSM850 and WiFi

Test Position		Scaled SAR_{Max}		Σ1-g SAR	SPLSR	Remark
		GSM1900	WiFi			
Head	Left Hand Touched	0.301	0.106	0.407	N/A	N/A
	Left Hand Tilted 15°	0.167	0.089	0.256	N/A	N/A
	Right Hand Touched	0.344	0.081	0.425	N/A	N/A
	Right Hand Tilted 15°	0.178	0.089	0.267	N/A	N/A
Body-Worn	Front side	0.301	0.014	0.315	N/A	N/A
	Back side	0.366	0.013	0.379	N/A	N/A
Hotspot	Front side	0.508	0.022	0.530	N/A	N/A
	Back side	0.668	0.027	0.695	N/A	N/A
	Left side	0.216	0.000	0.216	N/A	N/A
	Right side	0.143	0.017	0.160	N/A	N/A
	Top side	0.000	0.045	0.045	N/A	N/A
	Bottom side	0.388	0.000	0.388	N/A	N/A

Table 46: Simultaneous Tx Combination of GSM1900 and WiFi

Test Position		Scaled SAR_{Max}		Σ1-g SAR	SPLSR	Remark
		UMTS Band V	WiFi			
Head	Left Hand Touched	0.246	0.106	0.352	N/A	N/A
	Left Hand Tilted 15°	0.205	0.089	0.294	N/A	N/A
	Right Hand Touched	0.293	0.081	0.374	N/A	N/A
	Right Hand Tilted 15°	0.203	0.089	0.292	N/A	N/A
Body-Worn	Front side	0.335	0.014	0.349	N/A	N/A
	Back side	0.509	0.013	0.522	N/A	N/A
Hotspot	Front side	0.385	0.022	0.407	N/A	N/A
	Back side	0.633	0.027	0.660	N/A	N/A
	Left side	0.404	0.000	0.404	N/A	N/A
	Right side	0.439	0.017	0.456	N/A	N/A
	Top side	0.000	0.045	0.045	N/A	N/A
	Bottom side	0.039	0.000	0.039	N/A	N/A

Table 47: Simultaneous Tx Combination of UMTS Band V and WiFi

Test Position		Scaled SAR_{Max}		Σ1-g SAR	SPLSR	Remark
		UMTS Band IV	WiFi			
Head	Left Hand Touched	0.557	0.106	0.663	N/A	N/A
	Left Hand Tilted 15°	0.336	0.089	0.425	N/A	N/A
	Right Hand Touched	0.535	0.081	0.616	N/A	N/A
	Right Hand Tilted 15°	0.273	0.089	0.362	N/A	N/A
Body-Worn	Front side	0.521	0.014	0.535	N/A	N/A
	Back side	0.602	0.013	0.615	N/A	N/A
Hotspot	Front side	0.797	0.022	0.819	N/A	N/A
	Back side	1.132	0.027	1.159	N/A	N/A
	Left side	0.374	0.000	0.374	N/A	N/A
	Right side	0.179	0.017	0.196	N/A	N/A
	Top side	0.000	0.045	0.045	N/A	N/A
	Bottom side	0.665	0.000	0.665	N/A	N/A

Table 48: Simultaneous Tx Combination of UMTS Band IV and WiFi

Test Position		Scaled SAR_{Max}		Σ1-g SAR	SPLSR	Remark
		UMTS Band II	WiFi			
Head	Left Hand Touched	0.609	0.106	0.715	N/A	N/A
	Left Hand Tilted 15°	0.348	0.089	0.437	N/A	N/A
	Right Hand Touched	0.729	0.081	0.810	N/A	N/A
	Right Hand Tilted 15°	0.369	0.089	0.458	N/A	N/A
Body-Worn	Front side	0.563	0.014	0.577	N/A	N/A
	Back side	0.731	0.013	0.744	N/A	N/A
Hotspot	Front side	0.917	0.022	0.939	N/A	N/A
	Back side	1.179	0.027	1.206	N/A	N/A
	Left side	0.379	0.000	0.379	N/A	N/A
	Right side	0.263	0.017	0.280	N/A	N/A
	Top side	0.000	0.045	0.045	N/A	N/A
	Bottom side	0.610	0.000	0.610	N/A	N/A

Table 49: Simultaneous Tx Combination of UMTS Band II and WiFi

Test Position		Scaled SAR_{Max}		Σ1-g SAR	SPLSR	Remark
		GSM850	BT			
Head	Left Hand Touched	0.309	0.118	0.427	N/A	N/A
	Left Hand Tilted 15°	0.219	0.118	0.337	N/A	N/A
	Right Hand Touched	0.298	0.118	0.416	N/A	N/A
	Right Hand Tilted 15°	0.215	0.118	0.333	N/A	N/A
Body-Worn	Front side	0.357	0.039	0.396	N/A	N/A
	Back side	0.522	0.039	0.561	N/A	N/A
Hotspot	Front side	0.478	0.059	0.537	N/A	N/A
	Back side	0.767	0.059	0.826	N/A	N/A
	Left side	0.526	0.059	0.585	N/A	N/A
	Right side	0.535	0.059	0.594	N/A	N/A
	Top side	0.000	0.059	0.059	N/A	N/A
	Bottom side	0.046	0.059	0.105	N/A	N/A

Table 50: Simultaneous Tx Combination of GSM850 and BT

Test Position		Scaled SAR_{Max}		Σ1-g SAR	SPLSR	Remark
		GSM1900	BT			
Head	Left Hand Touched	0.301	0.118	0.419	N/A	N/A
	Left Hand Tilted 15°	0.167	0.118	0.285	N/A	N/A
	Right Hand Touched	0.344	0.118	0.462	N/A	N/A
	Right Hand Tilted 15°	0.178	0.118	0.296	N/A	N/A
Body-Worn	Front side	0.301	0.039	0.340	N/A	N/A
	Back side	0.366	0.039	0.405	N/A	N/A
Hotspot	Front side	0.508	0.059	0.567	N/A	N/A
	Back side	0.668	0.059	0.727	N/A	N/A
	Left side	0.216	0.059	0.275	N/A	N/A
	Right side	0.143	0.059	0.202	N/A	N/A
	Top side	0.000	0.059	0.059	N/A	N/A
	Bottom side	0.388	0.059	0.447	N/A	N/A

Table 51: Simultaneous Tx Combination of GSM1900 and BT

Test Position		Scaled SAR_{Max}		Σ1-g SAR	SPLSR	Remark
		UMTS Band V	BT			
Head	Left Hand Touched	0.246	0.118	0.364	N/A	N/A
	Left Hand Tilted 15°	0.205	0.118	0.323	N/A	N/A
	Right Hand Touched	0.293	0.118	0.411	N/A	N/A
	Right Hand Tilted 15°	0.203	0.118	0.321	N/A	N/A
Body-Worn	Front side	0.335	0.039	0.374	N/A	N/A
	Back side	0.509	0.039	0.548	N/A	N/A
Hotspot	Front side	0.385	0.059	0.444	N/A	N/A
	Back side	0.633	0.059	0.692	N/A	N/A
	Left side	0.404	0.059	0.463	N/A	N/A
	Right side	0.439	0.059	0.498	N/A	N/A
	Top side	0.000	0.059	0.059	N/A	N/A
	Bottom side	0.039	0.059	0.098	N/A	N/A

Table 52: Simultaneous Tx Combination of UMTS Band V and BT

Test Position		Scaled SAR_{Max}		Σ1-g SAR	SPLSR	Remark
		UMTS Band IV	BT			
Head	Left Hand Touched	0.557	0.118	0.675	N/A	N/A
	Left Hand Tilted 15°	0.336	0.118	0.454	N/A	N/A
	Right Hand Touched	0.535	0.118	0.653	N/A	N/A
	Right Hand Tilted 15°	0.273	0.118	0.391	N/A	N/A
Body-Worn	Front side	0.521	0.039	0.560	N/A	N/A
	Back side	0.602	0.039	0.641	N/A	N/A
Hotspot	Front side	0.797	0.059	0.856	N/A	N/A
	Back side	1.132	0.059	1.191	N/A	N/A
	Left side	0.374	0.059	0.433	N/A	N/A
	Right side	0.179	0.059	0.238	N/A	N/A
	Top side	0.000	0.059	0.059	N/A	N/A
	Bottom side	0.665	0.059	0.724	N/A	N/A

Table 53: Simultaneous Tx Combination of UMTS Band IV and BT

Test Position		Scaled SAR_{Max}		Σ1-g SAR	SPLSR	Remark
		UMTS Band II	BT			
Head	Left Hand Touched	0.609	0.118	0.727	N/A	N/A
	Left Hand Tilted 15°	0.348	0.118	0.466	N/A	N/A
	Right Hand Touched	0.729	0.118	0.847	N/A	N/A
	Right Hand Tilted 15°	0.369	0.118	0.487	N/A	N/A
Body-Worn	Front side	0.563	0.039	0.602	N/A	N/A
	Back side	0.731	0.039	0.770	N/A	N/A
Hotspot	Front side	0.917	0.059	0.976	N/A	N/A
	Back side	1.179	0.059	**1.238**	N/A	N/A
	Left side	0.379	0.059	0.438	N/A	N/A
	Right side	0.263	0.059	0.322	N/A	N/A
	Top side	0.000	0.059	0.059	N/A	N/A
	Bottom side	0.61	0.059	0.669	N/A	N/A

Table 54: Simultaneous Tx Combination of UMTS Band II and BT

7.3.4 Simultaneous Transmission Conlcusion

The above numeral summed SAR results and SPLSR analysis is sufficient to determin that simultaneous transmission cases will not exceed the SAR limit and therefore simultaneous transmission SAR with Volume Scans is not required per KDB 447498 D01.

Appendix A. System Check Plots
(Pls See Appendix A.)

Appendix B. SAR Measurement Plots
(Pls See Appendix B.)

Appendix C. Calibration Certificate
(Pls See Appendix C.)

Appendix D. Photo documentation
(Pls See Appendix D.)

End