HUAWEI G6-L22

Quick Start Guide

HUAWEI

Getting to know your phone

Thank you for choosing the HUAWEI smartphone.

First, let's take a look at a few basics:

Press and hold the power button to power on your phone. After your phone is powered up, you can use the power button to turn the screen off and on.

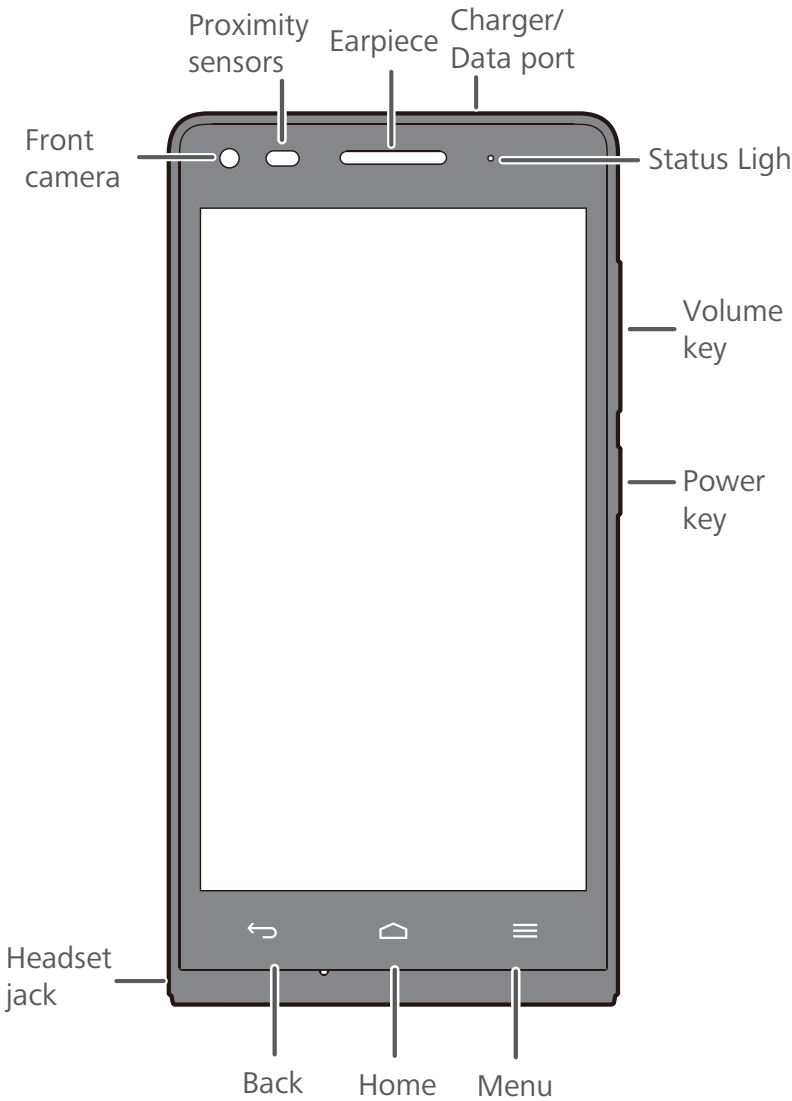

Preparing your phone

To insert the SIM card, and microSD card, please perform the steps shown in the following figures.

Don't insert or remove the SIM card when your phone is powered on.

1 Remove the battery cover

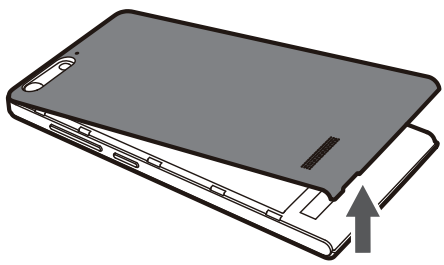

2 Insert the SIM card

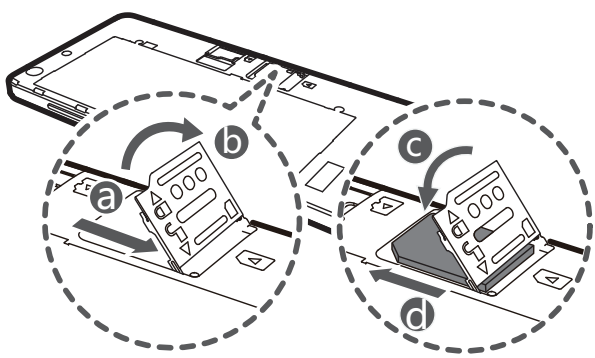

3 Insert the microSD card (optional)

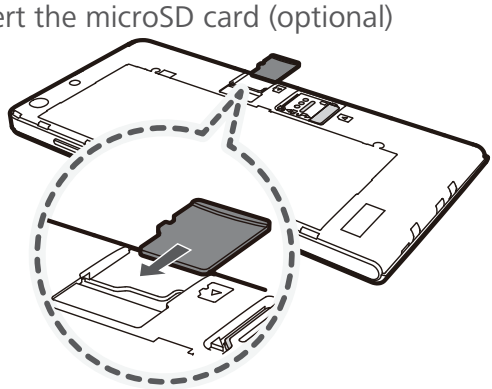

Your phone is shipped with the battery partially charged. It is recommended that you fully charge the battery before using it for the first time.

4 Close the battery cover

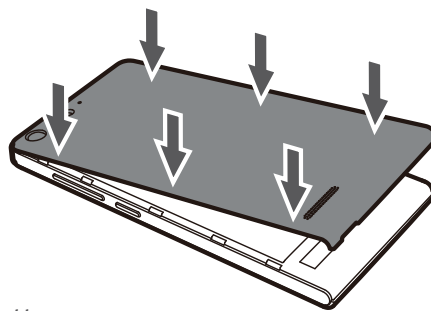

5 Charge the battery

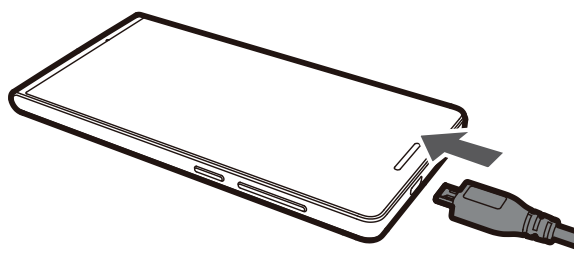

Using the Simple UI

On the home screen, touch and hold a blank area to display the **Set Home Screen** dialog box, and then touch **Simple home**.

On the simple home screen, touch **Standard Home** to switch to standard home screen style.

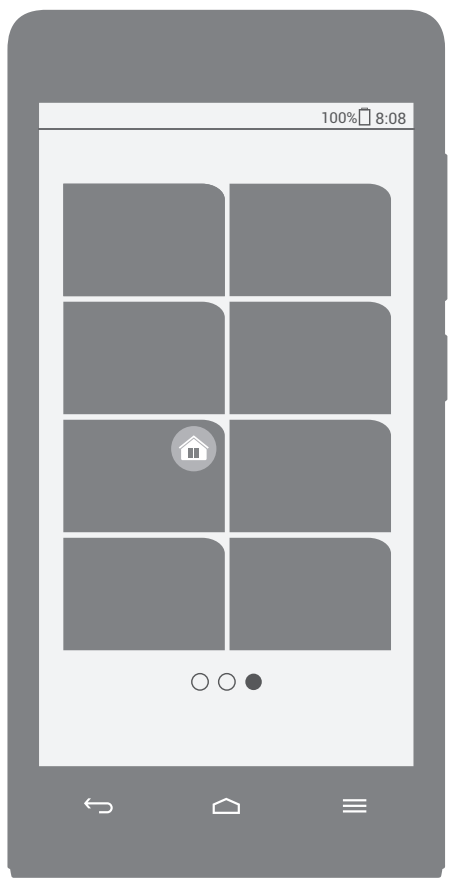

Locking and unlocking the screen

When you are not using your phone, press the power button to turn off the screen.

After being idle for a specified period of time, your phone automatically locks its screen.

Follow the onscreen instructions and drag to unlock the screen or open an application.

Managing contacts

Touch to open **People**.

From the contact list, touch > **Manage contacts** to import contacts from the SIM card, microSD card, or another Bluetooth device.

Touch the **Groups** tab page to group your contacts for easier management.

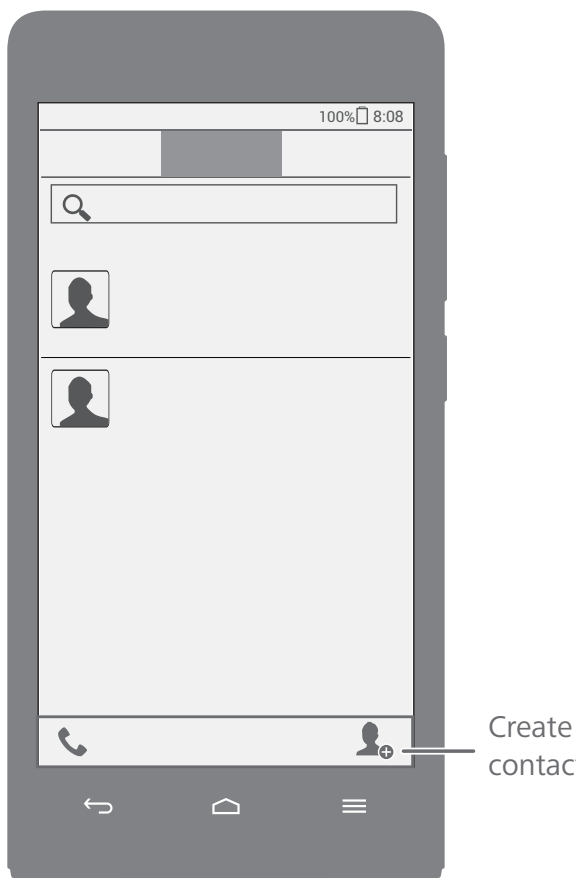

Personalizing your Home screen

The unique Me Widget can group widgets that you often use. You can touch an icon to open a widget.

Touch and hold Me Widget until your phone vibrates, and then touch **Touch to customize** to customize your Me Widget.

Making a call

Touch to open the dialer.

You can dial a phone number directly or touch to choose a contact.

To answer an incoming call, drag to .

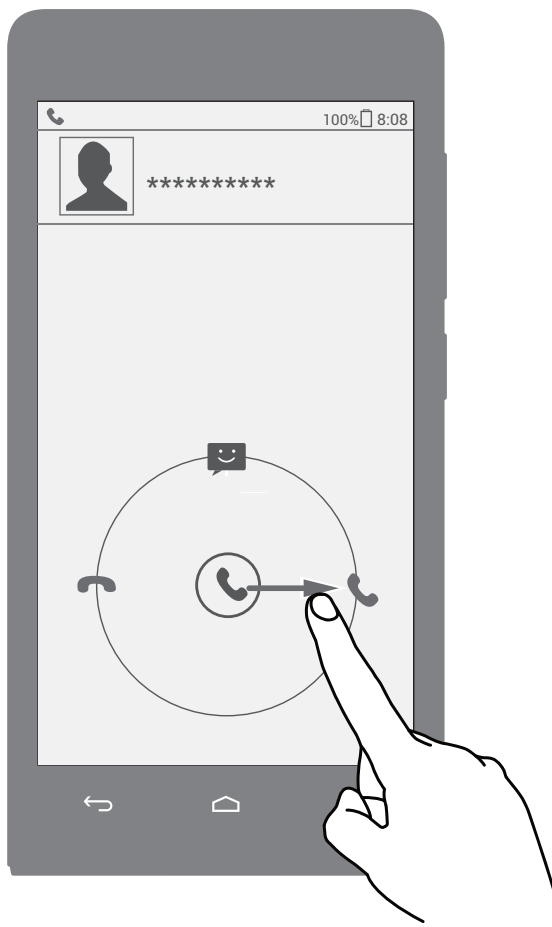

Sending messages

Touch to open **Messaging**.

Adding a photo or audio clip to a text message turns it into a multimedia message.

You can also save attachments from multimedia messages.

Taking a photo or video

Touch to open **Camera**.

In photo mode, let your camera focus automatically or touch the screen to focus the camera. Then touch to take a photo. In video mode, frame the scene and touch to record a video.

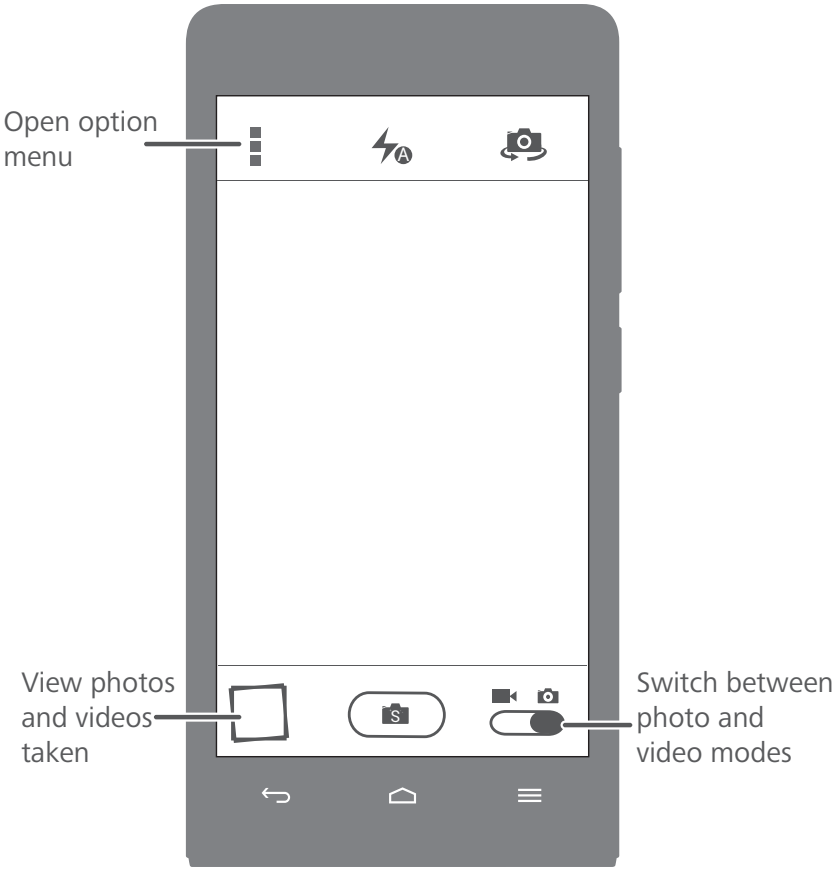

Listening to music

Touch to open **Music**.

You can copy songs to your phone and immerse yourself with extraordinary audio experience anytime.

You can play songs by name, artist, album and more.

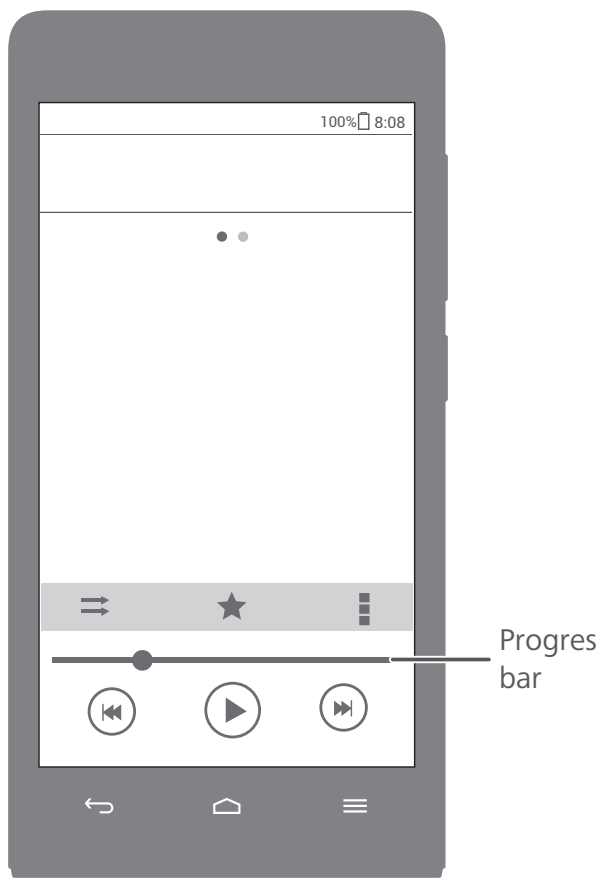

For more help

Want to obtain the user guide?

Search for and download the User Guide from http://consumer.huawei.com/en/.

Want to learn more about Huawei Emotion UI?

Visit en.ui.vmall.com for the latest information.

Safety information

This section contains important information about how to use your device safely and how it operates. Read this information carefully before using your device.

Electronic device

Do not use your device if its use is prohibited or if it may cause danger or interference with other electronic devices.

Interference with medical equipment

- Adhere to any rules or regulations set forth by hospitals and health care facilities.
- Some wireless devices may affect the performance of hearing aids or pacemakers. For more information, contact your service provider.
- Pacemaker manufacturers recommend maintaining a minimum distance of 15 cm between a pacemaker and a wireless device to prevent potential interference with the pacemaker. If using a pacemaker, hold the device on the side opposite the pacemaker and do not carry the device in your front pocket.

Protecting your hearing when using a headset

- To prevent possible hearing damage, do not listen at high volume levels for long periods.
- Using a headset at high volumes may damage your hearing. To reduce this risk, lower the headset volume to a safe and comfortable level.
- Exposure to high volumes while driving may cause distraction and increase your risk of an accident.

Areas with flammables and explosives

- Do not use the device in environments where flammables or explosives are stored, such as a petrol station, because the

electronics in the device may trigger an explosion or fire. Always adhere to any warning signs or information that may be present in these environments.

- Do not store or transport the device in containers with flammable liquids, gases, or explosives.

Traffic safety

- Adhere to local laws and regulations while using the device. To reduce the risk of accidents, do not use your device while driving.
- Concentrate on driving. Your first responsibility is to drive safely.
- Do not hold the device while driving. Use hands-free accessories.
- If you must make or answer a call, stop your vehicle at a safe location first.
- The signals from the device may interfere with the electronic systems of motor vehicles. For more information, contact the vehicle manufacturer.
- Do not place the device over an air bag or in the deployment area of an air bag in a motor vehicle. Doing so may cause injury if the air bag deploys.
- Do not use the wireless functions of your device while flying or while boarding an aeroplane. Doing so may interfere with the aeroplane's systems and may be illegal.

Operating environment

- Avoid environments in which there is dust, damp, dirt, or magnetic fields. Using the device in these environments may cause it to malfunction.
- Do not use your device during thunderstorms to protect your device against any danger caused by lightning.
- Ideal operating temperatures are 0°C to 35°C. Ideal storage temperatures are -20°C to 70°C. Extreme heat or cold may damage your device or accessories.

- Do not expose your device to direct sunlight (such as on a car dashboard) for prolonged periods.
- To protect your device or accessories from fire or electrical shock hazards, avoid rain and moisture.
- Keep the device away from sources of heat and fire, such as a heater, microwave oven, stove, water heater, radiator, or candle.
- Do not place sharp metal objects, such as pins, near the earpiece or speaker. The earpiece may attract these objects and result in injury.
- If the device overheats, close any opened applications or stop using it until it cools down. If skin is exposed to an overheated device for an extended period, low-temperature burn symptoms, such as red spots or darker pigmentation, may occur.
- Do not use your device's camera flash directly in the eyes of people or pets. Otherwise, a temporary loss of vision or damage to the eyes may occur.
- Do not touch the device's antenna. Otherwise, communication quality may be reduced.
- Do not allow children or pets to bite or suck the device or accessories. Doing so may result in damage or explosion.
- Adhere to local laws and regulations, and respect the privacy and legal rights of others.

Child's safety

- Keep the device and its accessories away from children and take all necessary precautions to ensure their safety. The device includes detachable parts that may present a choking hazard.
- The device and its accessories are not intended for use by children. Children should use the device only under direct adult supervision.

Accessories

- Using an unapproved or incompatible power adapter, charger, or battery may cause a fire, explosion, or other hazards.
- Use only approved accessories. The use of unapproved accessories may void the warranty, may violate local regulations and laws, and may be dangerous. For information about the availability of approved accessories in your area, contact your retailer.

Charger safety

- For pluggable devices, the socket-outlet shall be installed near the devices and shall be easily accessible.
- Unplug the charger from the electric socket and from the device when not in use.
- Do not drop or cause an impact to the charger.
- If the power cable is damaged or the plug is loose, stop using it immediately. Continued use may lead to an electric shock, short circuit, or fire.
- Do not touch the power cable with wet hands or pull it to disconnect the charger.
- Do not touch the device or the charger with wet hands. Doing so may lead to an electric shock, short circuit, or malfunction.
- If your charger has been exposed to liquid or excessive moisture, take it to an authorised service centre for inspection.
- Ensure that the charger complies with Clause 2.5 in IEC60950-1/EN60950-1/UL60950-1 and has been tested and approved according to national or local standards.
- Connect the device only to products that display the USB-IF logo or that comply with the USB-IF program.

Battery safety

- Do not bridge the battery terminals with conductive material, such as keys or jewellery. Doing so will short-circuit the battery and may cause injury.
- Keep the battery away from excessive heat and direct sunlight. Do not place it on or in heating devices, such as microwave ovens, stoves, or radiators. Batteries may explode if overheated.
- Do not attempt to modify the battery, insert foreign objects into it, or immerse or expose it to liquids. Doing so may lead to fire, explosion, or other hazards.
- If the battery leaks, ensure that the electrolyte does not make contact with your skin or eyes. If contact is made, immediately flush with clean water and consult a doctor.
- If battery deformation occurs, it changes colour, or it overheats while charging or storing, stop using the device immediately and remove the battery. Continued use may lead to battery leakage, fire, or explosion.
- Do not dispose of batteries in fire as they may explode. Damaged batteries may also explode.
- Dispose of used batteries in accordance with local regulations. Improper battery use may lead to fire, explosion, or other hazards.
- Do not allow children or pets to bite or suck the battery. Doing so may result in damage or explosion.
- Do not damage the battery or expose it to high external pressure. Doing so may lead to a short circuit or overheating.
- Do not drop the device or battery. Doing so may damage the device or battery.
- If the device standby time shortens significantly, replace the battery.
- The device has a built-in, non-removable battery. Do not attempt to remove it. Doing so may damage the device. To

replace the battery, take the device to an authorised service centre.

Cleaning and maintenance

- Keep the device and accessories dry. Do not attempt to dry it with an external heat source, such as a microwave oven or hair dryer.
- Do not expose your device or accessories to extreme heat or cold, which may interfere with proper function and may lead to fire or explosion.
- Avoid collision, which may lead to device malfunctions, overheating, fire, or explosion.
- Before you clean or maintain the device, stop using it, close all applications, and disconnect all cables connected to it.
- Do not use chemical detergents, powders, or other agents (such as alcohol or benzene) to clean the device or accessories. These substances may cause damage to parts or present a fire hazard. Use a clean, soft, and dry cloth to clean the device and accessories.
- Do not place magnetic stripe cards, such as bankcards and phone cards, near the device for extended periods of time. Otherwise, these cards may be damaged.
- Do not dismantle or attempt to modify the device or its accessories. This voids the warranty and releases the manufacturer from liability for damage. In case of damage, contact an authorised service centre for assistance or repair.
- If the device screen is damaged, stop using the device immediately. Do not touch or attempt to remove the broken parts. Contact an authorised service centre as soon as possible.

Emergency calls

The availability of emergency calls is subject to the signal quality, service provider policy, and local laws and regulations. Never rely solely on your device for critical communications such as medical emergencies.

Environmental protection

- The device and its accessories (if included), such as the power adapter, headset, and battery, should not be disposed of with household waste.
- Disposal of the device and its accessories is subject to local regulations. Ensure proper collection and recycling.

Disposal and recycling information

This symbol (with or without a solid bar) on the device, batteries (if included), and/or the packaging, indicates that the device, its electrical accessories (for example, a headset, adapter, or cable), and batteries should not be disposed of as household garbage.

These items should not be disposed of as unsorted municipal waste and should be taken to a certified collection point for recycling or proper disposal.

For more detailed information about device or battery recycling, contact your local city office, household waste disposal service, or retail store.

Disposal of the device and batteries (if included) is subject to WEEE Directive Recast (Directive 2012/19/EU) and Battery Directive (Directive 2006/66/EC). The purpose of separating WEEE and batteries from other waste is to minimise the potential environmental impacts and human health risk of any hazardous substances that may be present.

Reduction of hazardous substances

This device is compliant with the REACH Regulation [Regulation (EC) No 1907/2006] and RoHS Directive Recast (Directive 2011/65/EU). Batteries (if included) are compliant with the Battery Directive (Directive 2006/66/EC). For up-to-date information about REACH and RoHS compliance, visit the website http://consumer.huawei.com/certification.

EU regulatory conformance

Body worn operation

The device complies with RF specifications when used near your ear or at a distance of 1.5 cm from your body. Ensure that the device accessories, such as a device case and device holster, are not composed of metal components. Keep the device away from your body to meet the distance requirement.

Certification information (SAR)

This device meets guidelines for exposure to radio waves.

Your device is a low-power radio transmitter and receiver. As recommended by international guidelines, the device is designed not to exceed the limits for exposure to radio waves. These guidelines were developed by the International Commission on Non-Ionizing Radiation Protection (ICNIRP), an independent scientific organisation, and include safety measures designed to ensure the safety of all users, regardless of age and health.

The Specific Absorption Rate (SAR) is the unit of measurement for the amount of radio frequency energy absorbed by the body when using a device. The SAR value is determined at the highest certified power level in laboratory conditions, but the actual SAR level during operation can be well below the value. This is because the device is designed to use the minimum power required to reach the network.

The SAR limit adopted by Europe is 2.0 W/kg averaged over 10 grams of tissue, and the highest SAR value for this device complies with this limit.

The highest SAR value reported for this device type when tested at the ear is 0.529 W/kg, and when properly worn on the body is 0.631 W/kg.

Statement

Hereby, Huawei Technologies Co., Ltd. declares that this device is in compliance with the essential requirements and other relevant provisions of Directive 1999/5/EC and Directive 2011/65/EU.

For the declaration of conformity, visit the website http://consumer.huawei.com/certification.

The following marking is included in the product:

CE0168

This device may be operated in all member states of the EU. Adhere to national and local regulations where the device is used. This device may be restricted for use, depending on the local network.

Restrictions in the 2.4 GHz band:

Norway: This subsection does not apply for the geographical area within a radius of 20 km from the centre of Ny-Ålesund.

FCC Regulatory Compliance

Body worn operation

The device complies with RF specifications when used near your ear or at a distance of 1.5 cm from your body. Ensure that the device accessories, such as a device case and device holster, are not composed of metal components. Keep the device away from your body to meet the distance requirement.

Certification information (SAR)

This device is also designed to meet the requirements for exposure to radio waves established by the Federal Communications Commission (USA).

The SAR limit adopted by the USA is 1.6 W/kg averaged over one gram of tissue. The highest SAR value reported to the FCC for this device type complies with this limit.

The highest SAR value reported to the FCC for this device type when using at the ear is 0.844 W/kg, and when properly worn on the body is 1.370 W/kg, and when using the Wi-Fi hotspot function is 1.234 W/Kg.

FCC statement

This device has been tested and found to comply with the limits for a Class B digital device, pursuant to Part 15 of the FCC Rules. These limits are designed to provide reasonable protection against harmful interference in a residential installation. This device generates, uses and can radiate radio frequency energy and, if not installed and used in accordance with the instructions, may cause harmful interference to radio communications. However, there is no guarantee that interference will not occur in a particular

installation. If this device does cause harmful interference to radio or television reception, which can be determined by turning the equipment off and on, the user is encouraged to perform one or more of the following operations to try to correct the interference:
--Reorient or relocate the receiving antenna.
--Increase the separation between the equipment and receiver.
--Connect the device into an outlet on a circuit different from that to which the receiver is connected.
--Consult the dealer or an experienced radio/TV technician for help.
This device complies with Part 15 of the FCC Rules. Operation is subject to the following two conditions: (1) this device may not cause harmful interference, and (2) this device must accept any interference received, including interference that may cause undesired operation.

Caution: Any changes or modifications to this device not expressly approved by Huawei Technologies Co., Ltd. for compliance could void the user's authority to operate the device.

Personal Information and Data Security

The use of some functions or third-party applications on your device could result in your personal information and data being lost or becoming accessible to others. Several measures are recommended to help you protect personal and confidential information.

- Place your device in a safe area to prevent it from unauthorized use.
- Set your device screen to lock and create a password or unlock pattern to open it.
- Periodically back up personal information kept on your SIM/UIM card, memory card, or stored in your device memory. If you change to a different device, be sure to move or delete any personal information on your old device.

- If you are worried about viruses when you receive messages or emails from a stranger, you can delete them without opening them.
- If you use your device to browse the Internet, avoid websites that might pose a security risk to avoid theft of your personal information.
- If you use services such as Wi-Fi tether or Bluetooth, set passwords for these services to prevent unauthorized access. When these services are not in use, turn them off.
- Install or upgrade device security software and regularly scan for viruses.
- Be sure to obtain third-party applications from a legitimate source. Downloaded third-party applications should be scanned for viruses.
- Install security software or patches released by Huawei or third-party application providers.
- Some applications require and transmit location information. As a result, a third-party may be able to share your location information.
- Your device may provide detection and diagnostic information to third-party application providers. Third party vendors use this information to improve their products and services.
- If you have concerns about the security of your personal information and data, please contact mobile@huawei.com.

Legal Notice

Copyright © Huawei Technologies Co., Ltd. 2014. All rights reserved.

This document, whether in part or whole, shall not be reproduced or transmitted in any way, shape, or form without the prior written consent of Huawei Technologies Co., Ltd. and its affiliates ("Huawei").

The product described in this document may include software that is the copyright of Huawei or its licensors. Such software shall not be reproduced, distributed, modified, decompiled, disassembled, decrypted, extracted, reverse engineered, leased, assigned, or sublicensed unless such restrictions are prohibited by law or such actions are approved by the copyright holder.

Trademarks and Permissions

HUAWEI, HUAWEI, and are trademarks or registered trademarks of Huawei Technologies Co., Ltd.
Android™ is a trademark of Google Inc.
LTE is a trade mark of ETSI.

The *Bluetooth*® word mark and logos are registered trademarks owned by *Bluetooth SIG, Inc.* and any use of such marks by Huawei Technologies Co., Ltd. is under license.
Other trademarks, products, services and company names mentioned herein may be the property of their respective owners.

Notice

Some features of the product and its accessories described herein rely on the software installed or the capacities and settings of the local network, and therefore may not be activated or may be limited by local network operators or network service providers. Therefore, the descriptions herein may not exactly match the purchased product or its accessories.
Huawei reserves the right to change or modify any information or specifications contained in this document at any time without prior notice and without any liability.

Third-Party Software Statement

Huawei does not own the intellectual property of the third-party software and applications that are delivered with this product. Therefore, Huawei will not provide any warranty of any kind for third-party software and applications. Neither will Huawei provide support to customers who use third-party software and applications, nor be responsible or liable for the functions or performance of third-party software and applications.
Third-party software and applications services may be interrupted or terminated at any time, and Huawei does not guarantee the

availability of any content or service. Third-party service providers provide content and services through network or transmission tools outside of the control of Huawei. To the greatest extent permitted by applicable law, it is explicitly stated that Huawei shall not compensate or be liable for services provided by third-party service providers, or the interruption or termination of third-party contents or services.

Huawei shall not be responsible for the legality, quality, or any other aspects of any third-party software installed on this product, or for any uploaded or downloaded third-party works in any form, including but not limited to texts, images, videos, or software etc. Customers shall bear the risk for any and all effects, including incompatibility between the software and this product, which result from installing software or uploading or downloading the third-party works.

This product is based on the open-source Android™ platform. Huawei has made necessary changes to the platform. Therefore, this product may not support all the functions that are supported by the standard Android platform or may be incompatible with third-party software. Huawei does not provide any warranty or representation in connect with any such compatibility and expressly excludes all liability in connection with such matters.

DISCLAIMER

ALL CONTENTS OF THIS DOCUMENT ARE PROVIDED “AS IS”. EXCEPT AS REQUIRED BY APPLICABLE LAWS, NO WARRANTIES OF ANY KIND, EITHER EXPRESS OR IMPLIED, INCLUDING BUT NOT LIMITED TO, THE IMPLIED WARRANTIES OF MERCHANTABILITY AND FITNESS FOR A PARTICULAR PURPOSE, ARE MADE IN RELATION TO THE ACCURACY, RELIABILITY OR CONTENTS OF THIS DOCUMENT.

TO THE MAXIMUM EXTENT PERMITTED BY APPLICABLE LAW, UNDER NO CIRCUMSTANCES SHALL HUAWEI BE LIABLE FOR ANY SPECIAL, INCIDENTAL, INDIRECT, OR CONSEQUENTIAL DAMAGES, OR LOSS OF PROFITS, BUSINESS, REVENUE, DATA, GOODWILL SAVINGS OR ANTICIPATED SAVINGS REGARDLESS OF WHETHER SUCH LOSSES ARE FORSEEABLE OR NOT.

THE MAXIMUM LIABILITY (THIS LIMITATION SHALL NOT APPLY TO LIABILITY FOR PERSONAL INJURY TO THE EXTENT APPLICABLE LAW PROHIBITS SUCH A LIMITATION) OF HUAWEI ARISING FROM THE USE OF THE PRODUCT DESCRIBED IN THIS DOCUMENT SHALL BE LIMITED TO THE AMOUNT PAID BY CUSTOMERS FOR THE PURCHASE OF THIS PRODUCT.

Import and Export Regulations

All applicable export or import laws and regulations must be complied with and all necessary governmental permits and licenses must be obtained before exporting or importing the product, including the software and technical data, described in this document.

Privacy Policy

To better understand how we protect your personal information, please see our privacy policy at http://consumer.huawei.com/privacy-policy.

For DTS patents, see http://patents.dts.com. Manufactured under license from DTS Licensing Limited. DTS, the Symbol, & DTS and the Symbol together are registered trademarks, and DTS Sound is a trademark of DTS, Inc. © DTS, Inc. All Rights Reserved.

Please visit www.huaweidevice.com/worldwide/support/hotline for recently updated hotline and email address in your country or region.

Model: HUAWEI G6-L22