In Collaboration with
s p e a g
CALIBRATION LABORATORY

Add: No.51 Xueyuan Road, Haidian District, Beijing, 100191, China
Tel: +86-10-62304633-2218 Fax: +86-10-62304633-2209
E-mail: cttl@chinattl.com Http://www.chinattl.cn

# DASY/EASY – Parameters of Probe: EX3DV4 – SN: 3962

## Calibration Parameter Determined in Body Tissue Simulating Media

| f [MHz][C] | Relative Permittivity [F] | Conductivity (S/m) [F] | ConvF X | ConvF Y | ConvF Z | Alpha[G] | Depth[G] (mm) | Unct. (k=2) |
|---|---|---|---|---|---|---|---|---|
| 750 | 55.5 | 0.96 | 10.37 | 10.37 | 10.37 | 0.40 | 0.85 | ±12.1% |
| 835 | 55.2 | 0.97 | 9.98 | 9.98 | 9.98 | 0.17 | 1.43 | ±12.1% |
| 1750 | 53.4 | 1.49 | 8.49 | 8.49 | 8.49 | 0.22 | 1.12 | ±12.1% |
| 1900 | 53.3 | 1.52 | 8.09 | 8.09 | 8.09 | 0.20 | 1.17 | ±12.1% |
| 2300 | 52.9 | 1.81 | 7.90 | 7.90 | 7.90 | 0.34 | 1.17 | ±12.1% |
| 2450 | 52.7 | 1.95 | 7.78 | 7.78 | 7.78 | 0.34 | 1.25 | ±12.1% |
| 2600 | 52.5 | 2.16 | 7.61 | 7.61 | 7.61 | 0.44 | 0.96 | ±12.1% |
| 5250 | 48.9 | 5.36 | 5.22 | 5.22 | 5.22 | 0.45 | 1.45 | ±13.3% |
| 5600 | 48.5 | 5.77 | 4.45 | 4.45 | 4.45 | 0.50 | 1.60 | ±13.3% |
| 5750 | 48.3 | 5.94 | 4.59 | 4.59 | 4.59 | 0.50 | 1.45 | ±13.3% |

[C] Frequency validity above 300 MHz of ±100MHz only applies for DASY v4.4 and higher (Page 2), else it is restricted to ±50MHz. The uncertainty is the RSS of ConvF uncertainty at calibration frequency and the uncertainty for the indicated frequency band. Frequency validity below 300 MHz is ± 10, 25, 40, 50 and 70 MHz for ConvF assessments at 30, 64, 128, 150 and 220 MHz respectively. Above 5 GHz frequency validity can be extended to ± 110 MHz.

[F] At frequency below 3 GHz, the validity of tissue parameters (ε and σ) can be relaxed to ±10% if liquid compensation formula is applied to measured SAR values. At frequencies above 3 GHz, the validity of tissue parameters (ε and σ) is restricted to ±5%. The uncertainty is the RSS of the ConvF uncertainty for indicated target tissue parameters.

[G] Alpha/Depth are determined during calibration. SPEAG warrants that the remaining deviation due to the boundary effect after compensation is always less than ± 1% for frequencies below 3 GHz and below ± 2% for the frequencies between 3-6 GHz at any distance larger than half the probe tip diameter from the boundary.

In Collaboration with
s p e a g
CALIBRATION LABORATORY

Add: No.51 Xueyuan Road, Haidian District, Beijing, 100191, China
Tel: +86-10-62304633-2218 Fax: +86-10-62304633-2209
E-mail: cttl@chinattl.com Http://www.chinattl.cn

# Frequency Response of E-Field
## (TEM-Cell: ifi110 EXX, Waveguide: R22)

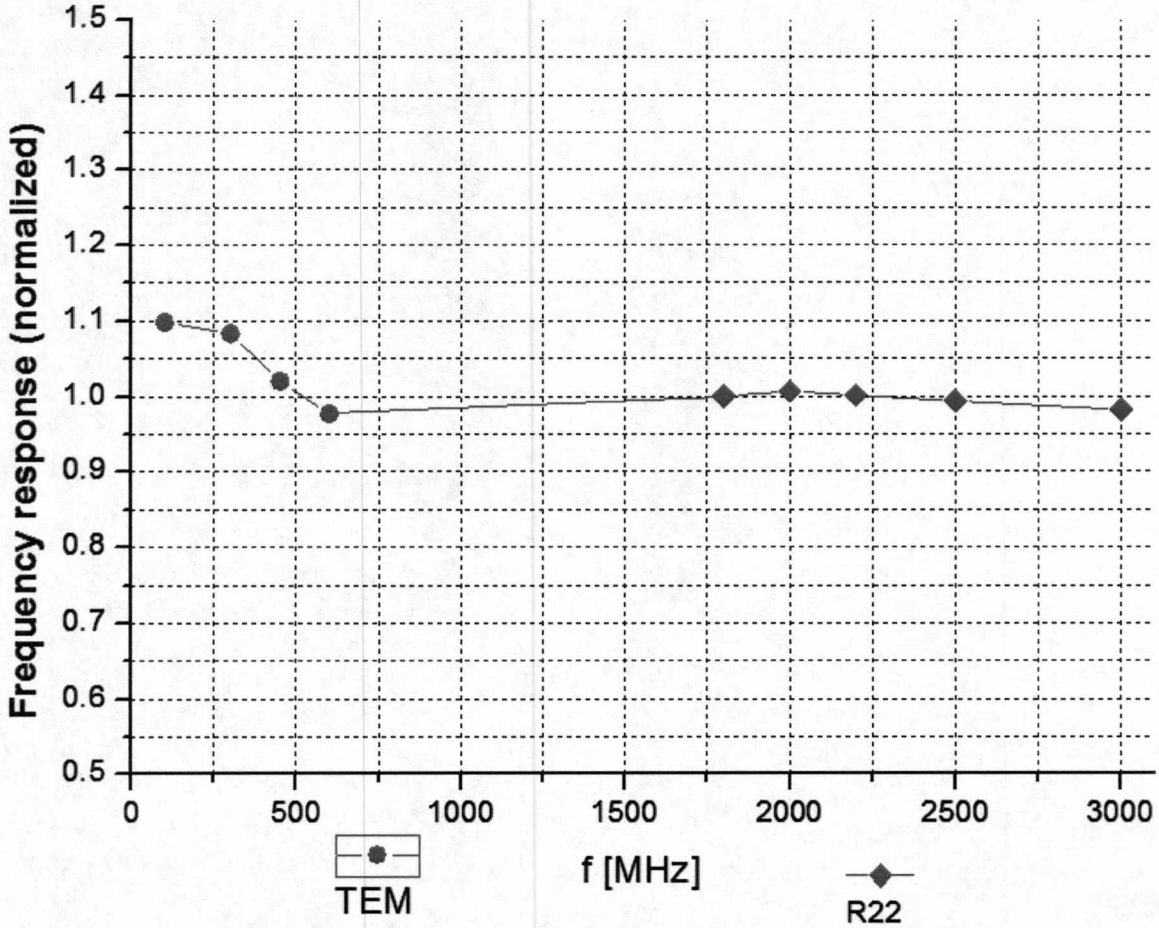


**Uncertainty of Frequency Response of E-field: ±7.4% (k=2)**

In Collaboration with
s p e a g
CALIBRATION LABORATORY

Add: No.51 Xueyuan Road, Haidian District, Beijing, 100191, China
Tel: +86-10-62304633-2218 Fax: +86-10-62304633-2209
E-mail: cttl@chinattl.com Http://www.chinattl.cn

# Receiving Pattern (Φ), θ=0°

## f=600 MHz, TEM

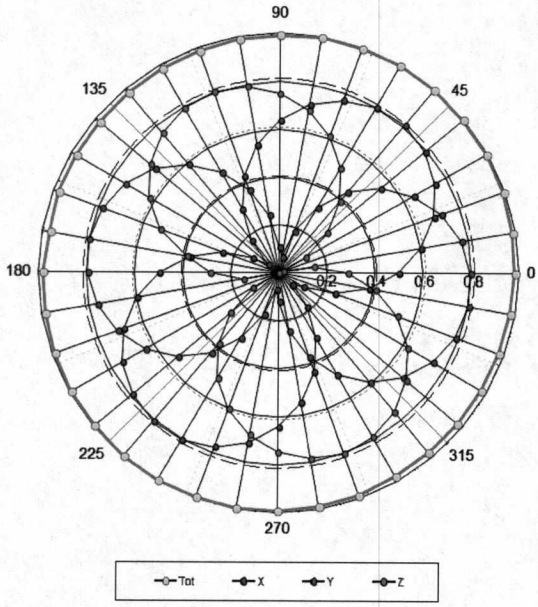


## f=1800 MHz, R22

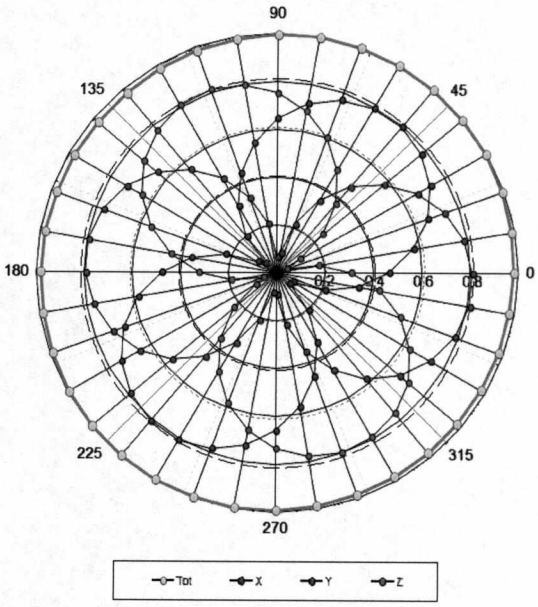


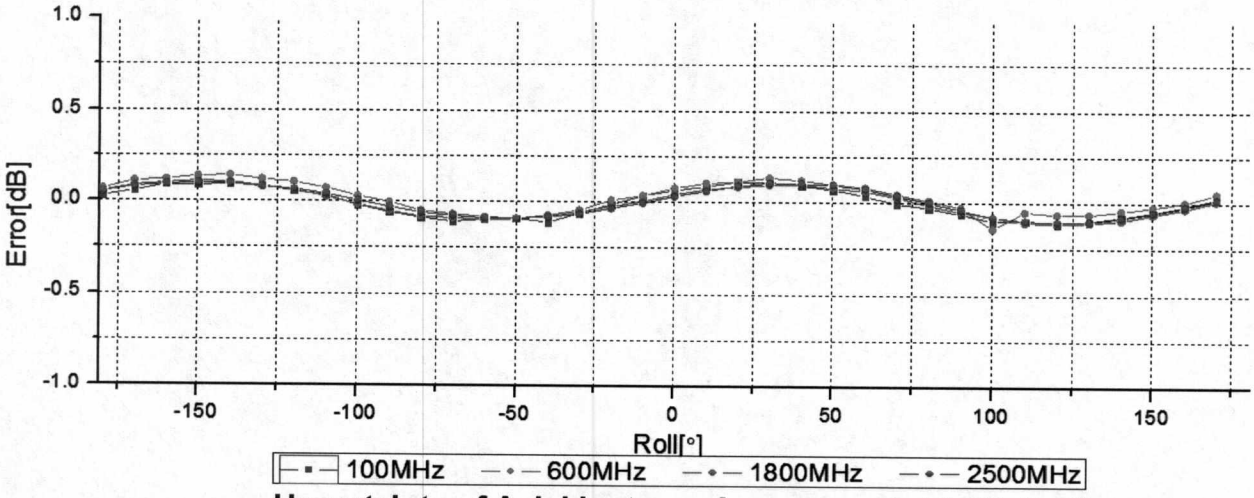


**Uncertainty of Axial Isotropy Assessment: ±1.2% (k=2)**

In Collaboration with
CTTL speag
CALIBRATION LABORATORY
Add: No.51 Xueyuan Road, Haidian District, Beijing, 100191, China
Tel: +86-10-62304633-2218 Fax: +86-10-62304633-2209
E-mail: cttl@chinattl.com Http://www.chinattl.cn

# Dynamic Range f($SAR_{head}$)
## (TEM cell, f = 900 MHz)

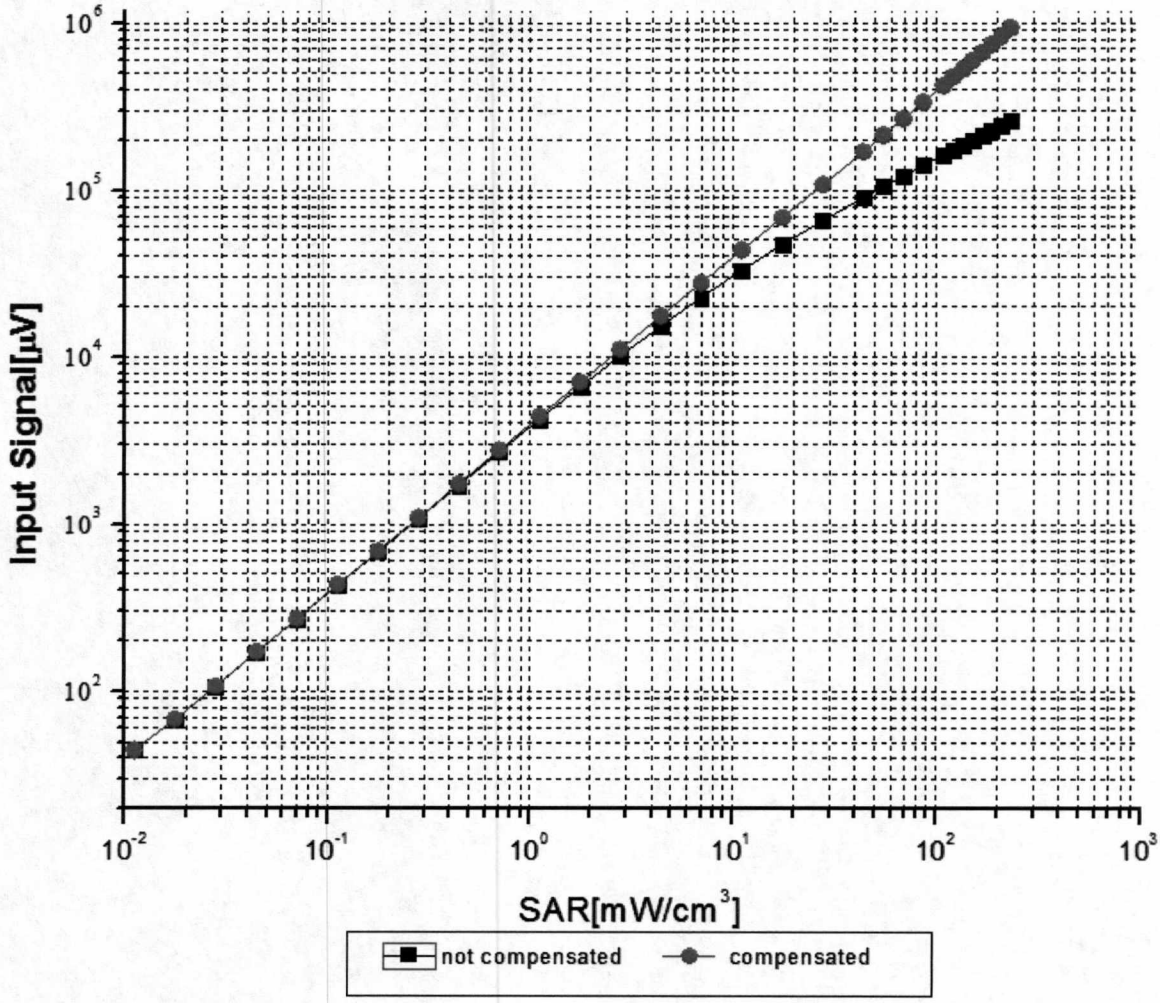


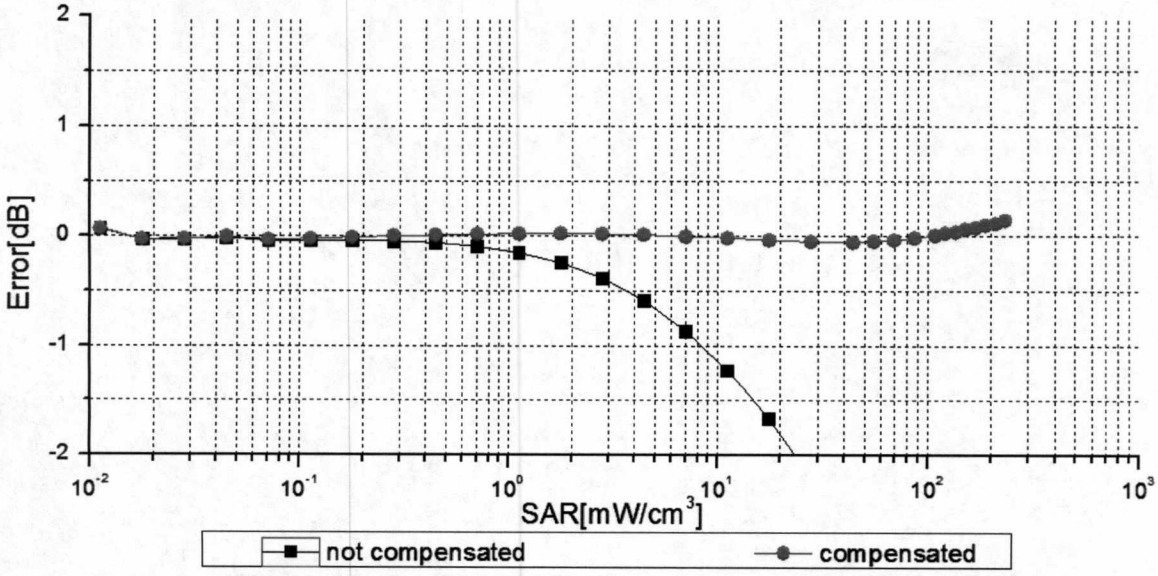


**Uncertainty of Linearity Assessment: ±0.9% (k=2)**

In Collaboration with
s p e a g
CALIBRATION LABORATORY

Add: No.51 Xueyuan Road, Haidian District, Beijing, 100191, China
Tel: +86-10-62304633-2218 Fax: +86-10-62304633-2209
E-mail: cttl@chinattl.com Http://www.chinattl.cn

# Conversion Factor Assessment

## f=835 MHz, WGLS R9(H_convF)

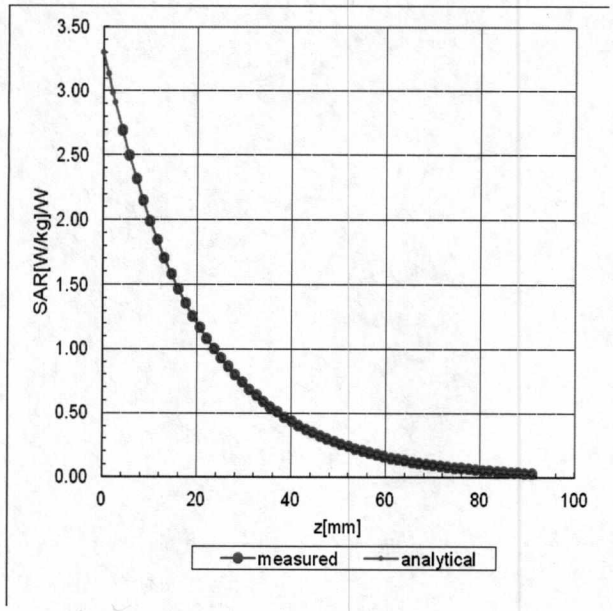


## f=1750 MHz, WGLS R22(H_convF)

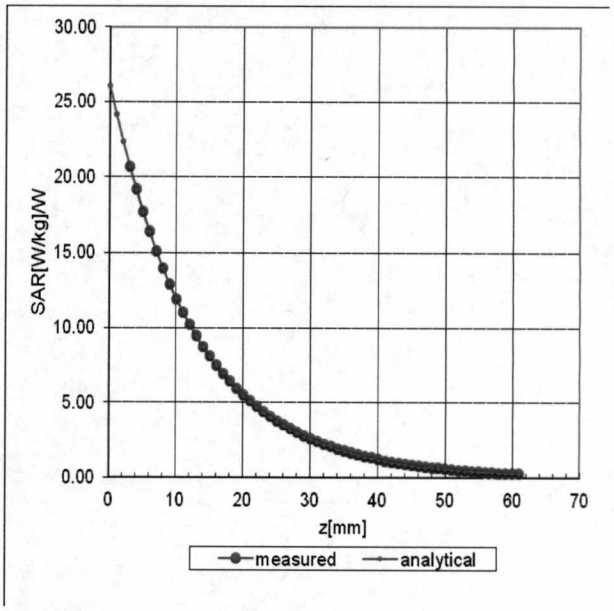


# Deviation from Isotropy in Liquid

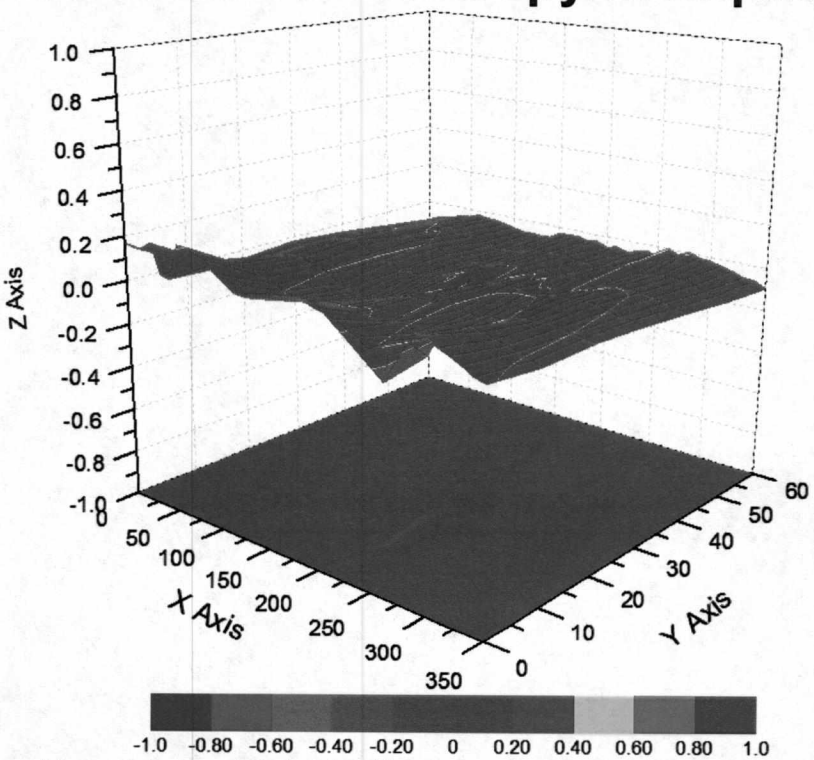


**Uncertainty of Spherical Isotropy Assessment: ±3.2% (K=2)**

In Collaboration with
s p e a g
CALIBRATION LABORATORY
Add: No.51 Xueyuan Road, Haidian District, Beijing, 100191, China
Tel: +86-10-62304633-2218 Fax: +86-10-62304633-2209
E-mail: cttl@chinattl.com Http://www.chinattl.cn

# DASY/EASY – Parameters of Probe: EX3DV4 – SN: 3962

## Other Probe Parameters

| | |
|---|---|
| Sensor Arrangement | Triangular |
| Connector Angle (°) | 152.2 |
| Mechanical Surface Detection Mode | enabled |
| Optical Surface Detection Mode | disable |
| Probe Overall Length | 337mm |
| Probe Body Diameter | 10mm |
| Tip Length | 9mm |
| Tip Diameter | 2.5mm |
| Probe Tip to Sensor X Calibration Point | 1mm |
| Probe Tip to Sensor Y Calibration Point | 1mm |
| Probe Tip to Sensor Z Calibration Point | 1mm |
| Recommended Measurement Distance from Surface | 1.4mm |

| Dipole D2450V2 SN 733 | | | | |
|---|---|---|---|---|
| Head Liquid | | | | |
| Date of Measurement | Return Loss(dB) | Δ % | Impedance (Ω) | ΔΩ |
| 2016-12-07 | -26.3 | / | 52.9 | / |
| 2017-12-06 | -27.5 | 4.56% | 56.1 | 3.2Ω |
| Body Liquid | | | | |
| Date of Measurement | Return Loss(dB) | Δ % | Impedance (Ω) | ΔΩ |
| 2016-12-07 | -24.6 | / | 49.7 | / |
| 2017-12-06 | -25.3 | 2.85% | 51.8 | 2.1Ω |

| Dipole D5GHzV2 SN 1165 | | | | |
|---|---|---|---|---|
| 5750MHz Head Liquid | | | | |
| Date of Measurement | Return Loss(dB) | Δ % | Impedance (Ω) | ΔΩ |
| 2016-12-13 | -27.6 | / | 52.4 | / |
| 2017-12-12 | -28.5 | 3.26% | 54.1 | 1.7Ω |
| 5750MHz Body Liquid | | | | |
| Date of Measurement | Return Loss(dB) | Δ % | Impedance (Ω) | ΔΩ |
| 2016-12-13 | -26.4 | / | 53.3 | / |
| 2017-12-12 | -27.1 | 2.65% | 55.9 | 2.6Ω |