In Collaboration with
s p e a g
CALIBRATION LABORATORY

Add: No.51 Xueyuan Road, Haidian District, Beijing, 100191, China
Tel: +86-10-62304633-2512 Fax: +86-10-62304633-2504
E-mail: cttl@chinattl.com Http://www.chinattl.cn

中国认可
国际互认
校准
CALIBRATION
CNAS L0570

Client **SGS** **Certificate No: Z19-60038**

CALIBRATION CERTIFICATE

Object	EX3DV4 - SN:3962
Calibration Procedure(s)	FF-Z11-004-01 Calibration Procedures for Dosimetric E-field Probes
Calibration date:	February 25, 2019

This calibration Certificate documents the traceability to national standards, which realize the physical units of measurements(SI). The measurements and the uncertainties with confidence probability are given on the following pages and are part of the certificate.

All calibrations have been conducted in the closed laboratory facility: environment temperature(22±3)°C and humidity<70%.

Calibration Equipment used (M&TE critical for calibration)

Primary Standards	ID #	Cal Date(Calibrated by, Certificate No.)	Scheduled Calibration
Power Meter NRP2	101919	20-Jun-18 (CTTL, No.J18X05032)	Jun-19
Power sensor NRP-Z91	101547	20-Jun-18 (CTTL, No.J18X05032)	Jun-19
Power sensor NRP-Z91	101548	20-Jun-18 (CTTL, No.J18X05032)	Jun-19
Reference10dBAttenuator	18N50W-10dB	09-Feb-18(CTTL, No.J18X01133)	Feb-20
Reference20dBAttenuator	18N50W-20dB	09-Feb-18(CTTL, No.J18X01132)	Feb-20
Reference Probe EX3DV4	SN 7514	27-Aug-18(SPEAG,No.EX3-7514_Aug18)	Aug-19
DAE4	SN 1555	20-Aug-18(SPEAG, No.DAE4-1555_Aug18)	Aug -19
Secondary Standards	**ID #**	**Cal Date(Calibrated by, Certificate No.)**	**Scheduled Calibration**
SignalGeneratorMG3700A	6201052605	21-Jun-18 (CTTL, No.J18X05033)	Jun-19
Network Analyzer E5071C	MY46110673	24-Jan-18 (CTTL, No.J18X00561)	Jan -19

	Name	Function	Signature
Calibrated by:	Yu Zongying	SAR Test Engineer	
Reviewed by:	Lin Hao	SAR Test Engineer	
Approved by:	Qi Dianyuan	SAR Project Leader	

Issued: February 27, 2019

This calibration certificate shall not be reproduced except in full without written approval of the laboratory.

Add: No.51 Xueyuan Road, Haidian District, Beijing, 100191, China
Tel: +86-10-62304633-2512 Fax: +86-10-62304633-2504
E-mail: cttl@chinattl.com Http://www.chinattl.cn

Glossary:

TSL	tissue simulating liquid
NORMx,y,z	sensitivity in free space
ConvF	sensitivity in TSL / NORMx,y,z
DCP	diode compression point
CF	crest factor (1/duty_cycle) of the RF signal
A,B,C,D	modulation dependent linearization parameters
Polarization Φ	Φ rotation around probe axis
Polarization θ	θ rotation around an axis that is in the plane normal to probe axis (at measurement center), i θ=0 is normal to probe axis
Connector Angle	information used in DASY system to align probe sensor X to the robot coordinate system

Calibration is Performed According to the Following Standards:

a) IEEE Std 1528-2013, "IEEE Recommended Practice for Determining the Peak Spatial-Averaged Specific Absorption Rate (SAR) in the Human Head from Wireless Communications Devices: Measurement Techniques", June 2013

b) IEC 62209-1, "Measurement procedure for the assessment of Specific Absorption Rate (SAR) from hand-held and body-mounted devices used next to the ear (frequency range of 300 MHz to 6 GHz)", July 2016

c) IEC 62209-2, "Procedure to determine the Specific Absorption Rate (SAR) for wireless communication devices used in close proximity to the human body (frequency range of 30 MHz to 6 GHz)", March 2010

d) KDB 865664, "SAR Measurement Requirements for 100 MHz to 6 GHz"

Methods Applied and Interpretation of Parameters:

- *NORMx,y,z:* Assessed for E-field polarization θ=0 (f≤900MHz in TEM-cell; f>1800MHz: waveguide). NORMx,y,z are only intermediate values, i.e., the uncertainties of NORMx,y,z does not effect the E^2-field uncertainty inside TSL (see below ConvF).
- *NORM(f)x,y,z = NORMx,y,z* frequency_response* (see Frequency Response Chart). This linearization is implemented in DASY4 software versions later than 4.2. The uncertainty of the frequency response is included in the stated uncertainty of ConvF.
- *DCPx,y,z:* DCP are numerical linearization parameters assessed based on the data of power sweep (no uncertainty required). DCP does not depend on frequency nor media.
- PAR: PAR is the Peak to Average Ratio that is not calibrated but determined based on the signal characteristics.
- *Ax,y,z; Bx,y,z; Cx,y,z;VRx,y,z:*A,B,C are numerical linearization parameters assessed based on the data of power sweep for specific modulation signal. The parameters do not depend on frequency nor media. VR is the maximum calibration range expressed in RMS voltage across the diode.
- *ConvF and Boundary Effect Parameters:* Assessed in flat phantom using E-field (or Temperature Transfer Standard for f≤800MHz) and inside waveguide using analytical field distributions based on power measurements for f >800MHz. The same setups are used for assessment of the parameters applied for boundary compensation (alpha, depth) of which typical uncertainty valued are given. These parameters are used in DASY4 software to improve probe accuracy close to the boundary. The sensitivity in TSL corresponds to NORMx,y,z* ConvF whereby the uncertainty corresponds to that given for ConvF. A frequency dependent ConvF is used in DASY version 4.4 and higher which allows extending the validity from±50MHz to±100MHz.
- *Spherical isotropy (3D deviation from isotropy):* in a field of low gradients realized using a flat phantom exposed by a patch antenna.
- *Sensor Offset:* The sensor offset corresponds to the offset of virtual measurement center from the probe tip (on probe axis). No tolerance required.
- *Connector Angle:* The angle is assessed using the information gained by determining the *NORMx* (no uncertainty required).

In Collaboration with
s p e a g
CALIBRATION LABORATORY
Add: No.51 Xueyuan Road, Haidian District, Beijing, 100191, China
Tel: +86-10-62304633-2512 Fax: +86-10-62304633-2504
E-mail: cttl@chinattl.com Http://www.chinattl.cn

Probe EX3DV4

SN: 3962

Calibrated: February 25, 2019

Calibrated for DASY/EASY Systems

(Note: non-compatible with DASY2 system!)

In Collaboration with
s p e a g
CALIBRATION LABORATORY
Add: No.51 Xueyuan Road, Haidian District, Beijing, 100191, China
Tel: +86-10-62304633-2512 Fax: +86-10-62304633-2504
E-mail: cttl@chinattl.com Http://www.chinattl.cn

DASY/EASY – Parameters of Probe: EX3DV4 – SN: 3962

Basic Calibration Parameters

	Sensor X	Sensor Y	Sensor Z	Unc (k=2)
Norm(μV/(V/m)²)[A]	0.42	0.47	0.44	±10.0%
DCP(mV)[B]	102.3	104.6	95.1	

Modulation Calibration Parameters

UID	Communication System Name		A dB	B dB√μV	C	D dB	VR mV	Unc[E] (k=2)
0	CW	X	0.0	0.0	1.0	0.00	155.1	±3.8%
		Y	0.0	0.0	1.0		166.8	
		Z	0.0	0.0	1.0		155.8	

The reported uncertainty of measurement is stated as the standard uncertainty of Measurement multiplied by the coverage factor k=2, which for a normal distribution Corresponds to a coverage probability of approximately 95%.

[A] The uncertainties of Norm X, Y, Z do not affect the E^2-field uncertainty inside TSL (see Page 5 and Page 6).
[B] Numerical linearization parameter: uncertainty not required.
[E] Uncertainly is determined using the max. deviation from linear response applying rectangular distribution and is expressed for the square of the field value.

In Collaboration with
s p e a g
CALIBRATION LABORATORY
Add: No.51 Xueyuan Road, Haidian District, Beijing, 100191, China
Tel: +86-10-62304633-2512 Fax: +86-10-62304633-2504
E-mail: cttl@chinattl.com Http://www.chinattl.cn

DASY/EASY – Parameters of Probe: EX3DV4 – SN: 3962

Calibration Parameter Determined in Head Tissue Simulating Media

f [MHz][C]	Relative Permittivity [F]	Conductivity (S/m) [F]	ConvF X	ConvF Y	ConvF Z	Alpha[G]	Depth[G] (mm)	Unct. (k=2)
750	41.9	0.89	10.10	10.10	10.10	0.15	1.23	±12.1%
835	41.5	0.90	9.80	9.80	9.80	0.16	1.26	±12.1%
1750	40.1	1.37	8.44	8.44	8.44	0.29	0.98	±12.1%
1900	40.0	1.40	8.14	8.14	8.14	0.30	0.93	±12.1%
2000	40.0	1.40	7.99	7.99	7.99	0.25	1.00	±12.1%
2300	39.5	1.67	7.94	7.94	7.94	0.64	0.69	±12.1%
2450	39.2	1.80	7.58	7.58	7.58	0.68	0.68	±12.1%
2600	39.0	1.96	7.39	7.39	7.39	0.65	0.70	±12.1%
5250	35.9	4.71	5.55	5.55	5.55	0.45	1.20	±13.3%
5600	35.5	5.07	4.80	4.80	4.80	0.45	1.50	±13.3%
5750	35.4	5.22	4.90	4.90	4.90	0.50	1.40	±13.3%

[C] Frequency validity above 300 MHz of ±100MHz only applies for DASY v4.4 and higher (Page 2), else it is restricted to ±50MHz. The uncertainty is the RSS of ConvF uncertainty at calibration frequency and the uncertainty for the indicated frequency band. Frequency validity below 300 MHz is ± 10, 25, 40, 50 and 70 MHz for ConvF assessments at 30, 64, 128, 150 and 220 MHz respectively. Above 5 GHz frequency validity can be extended to ± 110 MHz.

[F] At frequency below 3 GHz, the validity of tissue parameters (ε and σ) can be relaxed to ±10% if liquid compensation formula is applied to measured SAR values. At frequencies above 3 GHz, the validity of tissue parameters (ε and σ) is restricted to ±5%. The uncertainty is the RSS of the ConvF uncertainty for indicated target tissue parameters.

[G] Alpha/Depth are determined during calibration. SPEAG warrants that the remaining deviation due to the boundary effect after compensation is always less than ± 1% for frequencies below 3 GHz and below ± 2% for the frequencies between 3-6 GHz at any distance larger than half the probe tip diameter from the boundary.

In Collaboration with
s p e a g
CALIBRATION LABORATORY
Add: No.51 Xueyuan Road, Haidian District, Beijing, 100191, China
Tel: +86-10-62304633-2512 Fax: +86-10-62304633-2504
E-mail: cttl@chinattl.com Http://www.chinattl.cn

DASY/EASY – Parameters of Probe: EX3DV4 – SN: 3962

Calibration Parameter Determined in Body Tissue Simulating Media

f [MHz][C]	Relative Permittivity[F]	Conductivity (S/m)[F]	ConvF X	ConvF Y	ConvF Z	Alpha[G]	Depth[G] (mm)	Unct. (k=2)
750	55.5	0.96	10.34	10.34	10.34	0.40	0.80	±12.1%
835	55.2	0.97	9.92	9.92	9.92	0.19	1.38	±12.1%
1750	53.4	1.49	8.30	8.30	8.30	0.27	1.02	±12.1%
1900	53.3	1.52	8.02	8.02	8.02	0.24	1.14	±12.1%
2300	52.9	1.81	7.82	7.82	7.82	0.62	0.79	±12.1%
2450	52.7	1.95	7.70	7.70	7.70	0.69	0.75	±12.1%
2600	52.5	2.16	7.51	7.51	7.51	0.65	0.75	±12.1%
5250	48.9	5.36	5.10	5.10	5.10	0.50	1.45	±13.3%
5600	48.5	5.77	4.33	4.33	4.33	0.55	1.55	±13.3%
5750	48.3	5.94	4.43	4.43	4.43	0.55	1.35	±13.3%

[C] Frequency validity above 300 MHz of ±100MHz only applies for DASY v4.4 and higher (Page 2), else it is restricted to ±50MHz. The uncertainty is the RSS of ConvF uncertainty at calibration frequency and the uncertainty for the indicated frequency band. Frequency validity below 300 MHz is ± 10, 25, 40, 50 and 70 MHz for ConvF assessments at 30, 64, 128, 150 and 220 MHz respectively. Above 5 GHz frequency validity can be extended to ± 110 MHz.

[F] At frequency below 3 GHz, the validity of tissue parameters (ε and σ) can be relaxed to ±10% if liquid compensation formula is applied to measured SAR values. At frequencies above 3 GHz, the validity of tissue parameters (ε and σ) is restricted to ±5%. The uncertainty is the RSS of the ConvF uncertainty for indicated target tissue parameters.

[G] Alpha/Depth are determined during calibration. SPEAG warrants that the remaining deviation due to the boundary effect after compensation is always less than ± 1% for frequencies below 3 GHz and below ± 2% for the frequencies between 3-6 GHz at any distance larger than half the probe tip diameter from the boundary.

In Collaboration with
s p e a g
CALIBRATION LABORATORY
Add: No.51 Xueyuan Road, Haidian District, Beijing, 100191, China
Tel: +86-10-62304633-2512 Fax: +86-10-62304633-2504
E-mail: cttl@chinattl.com Http://www.chinattl.cn

Frequency Response of E-Field
(TEM-Cell: ifi110 EXX, Waveguide: R22)

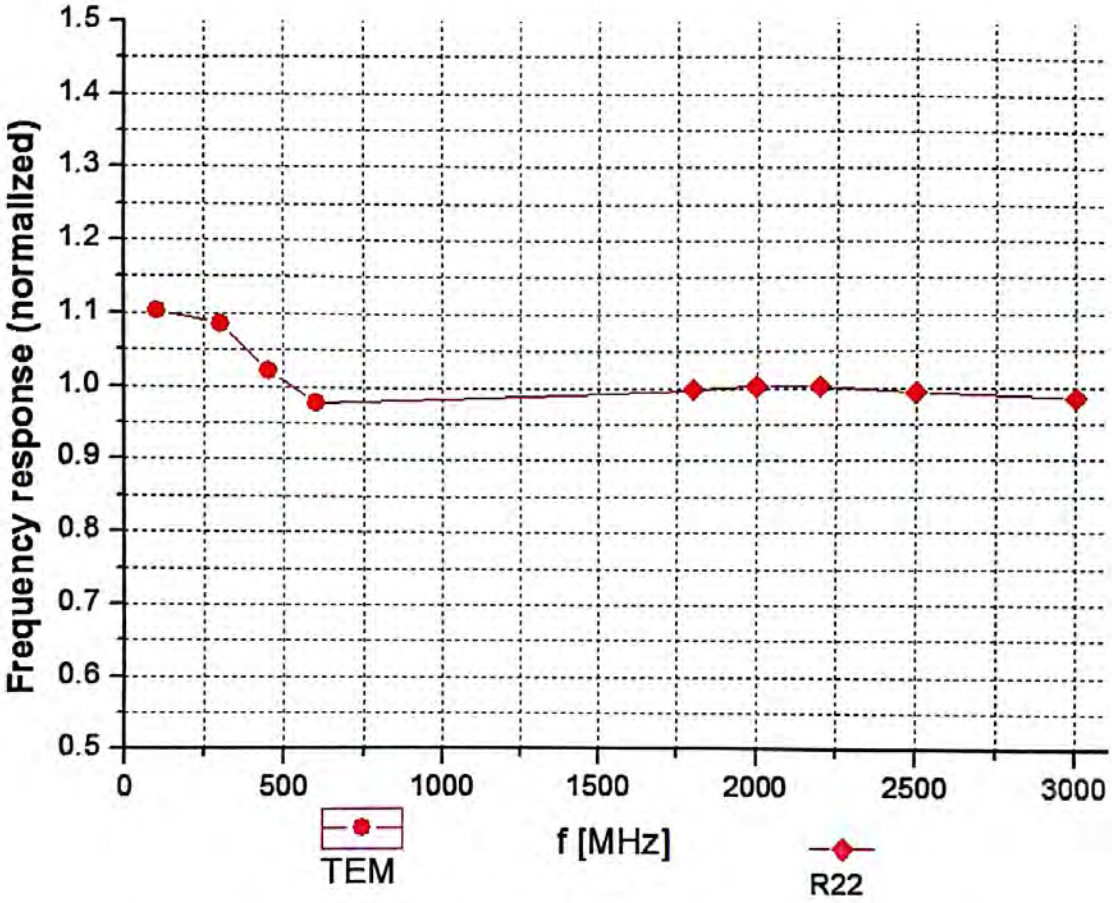

Uncertainty of Frequency Response of E-field: ±7.4% (k=2)

In Collaboration with
s p e a g
CALIBRATION LABORATORY
Add: No.51 Xueyuan Road, Haidian District, Beijing, 100191, China
Tel: +86-10-62304633-2512 Fax: +86-10-62304633-2504
E-mail: cttl@chinattl.com Http://www.chinattl.cn

Receiving Pattern (Φ), θ=0°

f=600 MHz, TEM

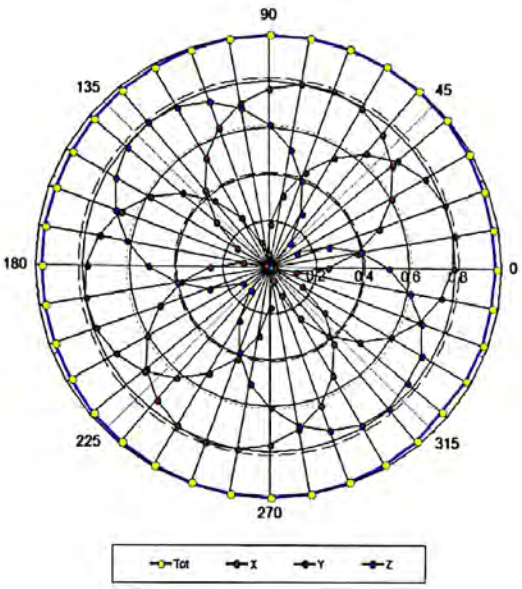

f=1800 MHz, R22

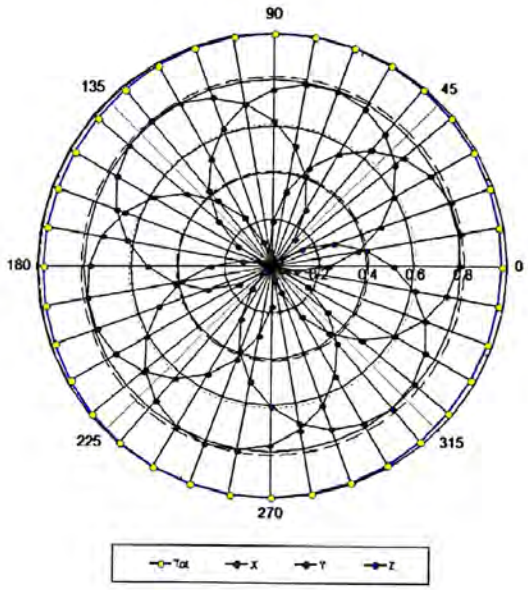

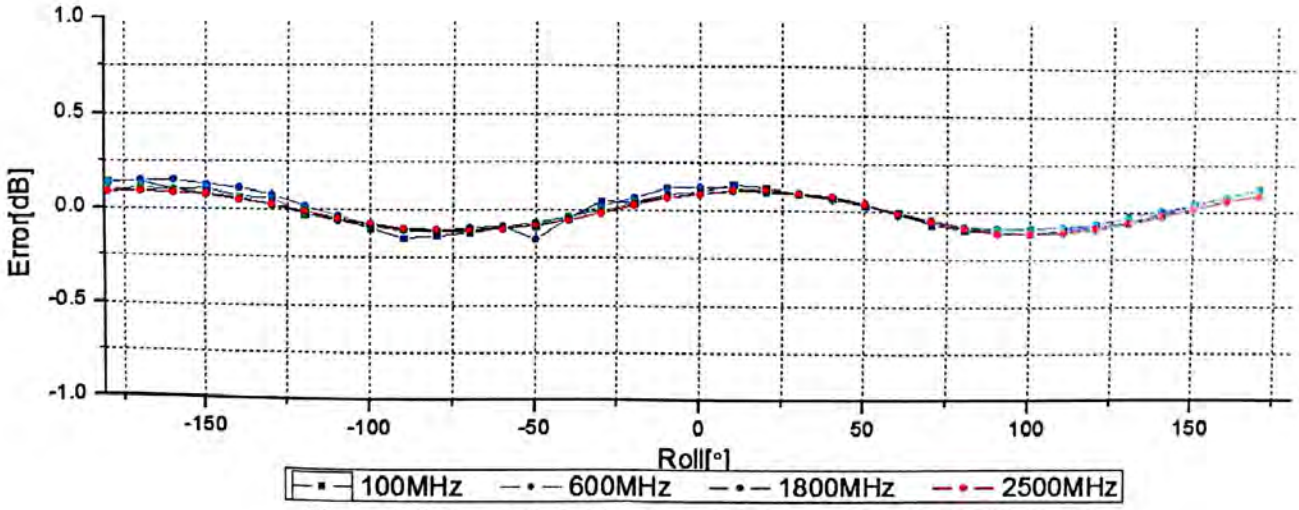

Uncertainty of Axial Isotropy Assessment: ±1.2% (k=2)

In Collaboration with
s p e a g
CALIBRATION LABORATORY
Add: No.51 Xueyuan Road, Haidian District, Beijing, 100191, China
Tel: +86-10-62304633-2512 Fax: +86-10-62304633-2504
E-mail: cttl@chinattl.com Http://www.chinattl.cn

Dynamic Range f(SAR$_{head}$)
(TEM cell, f = 900 MHz)

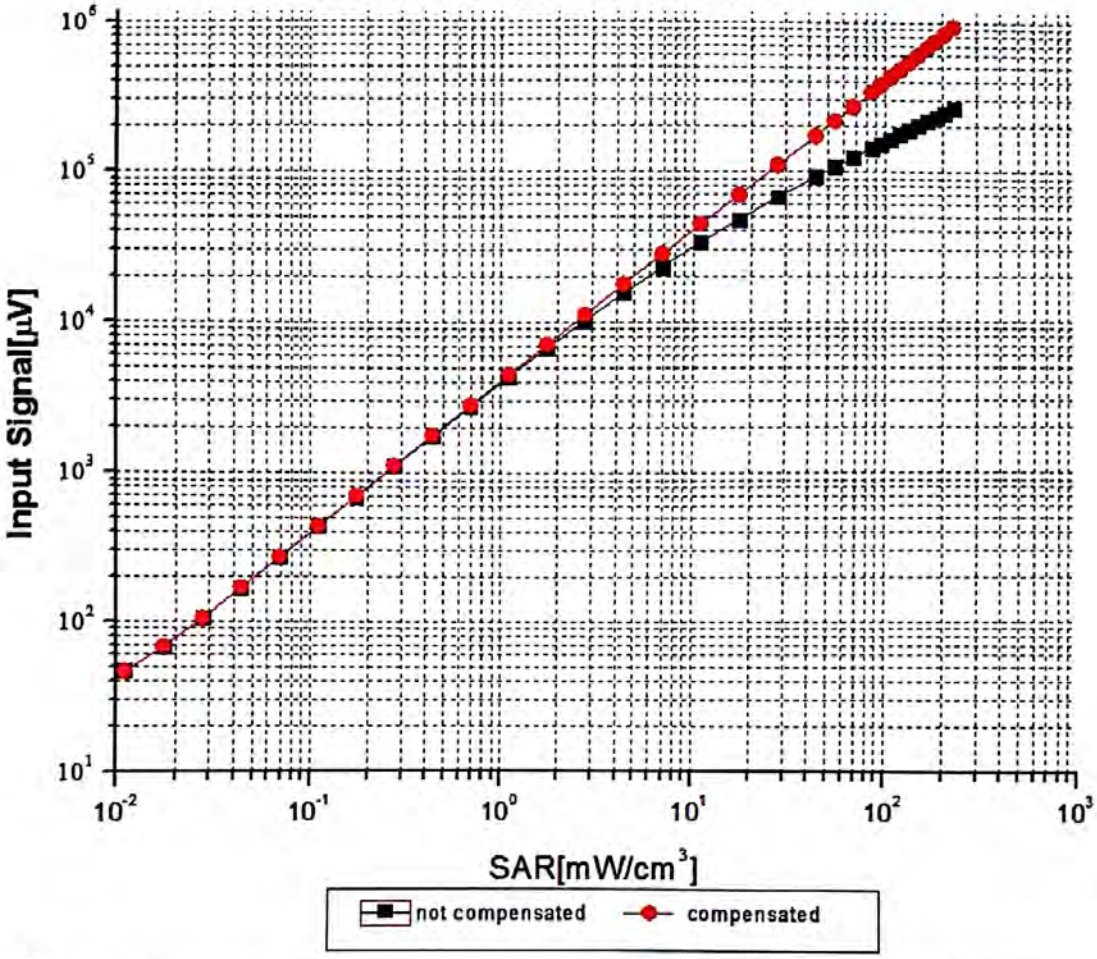

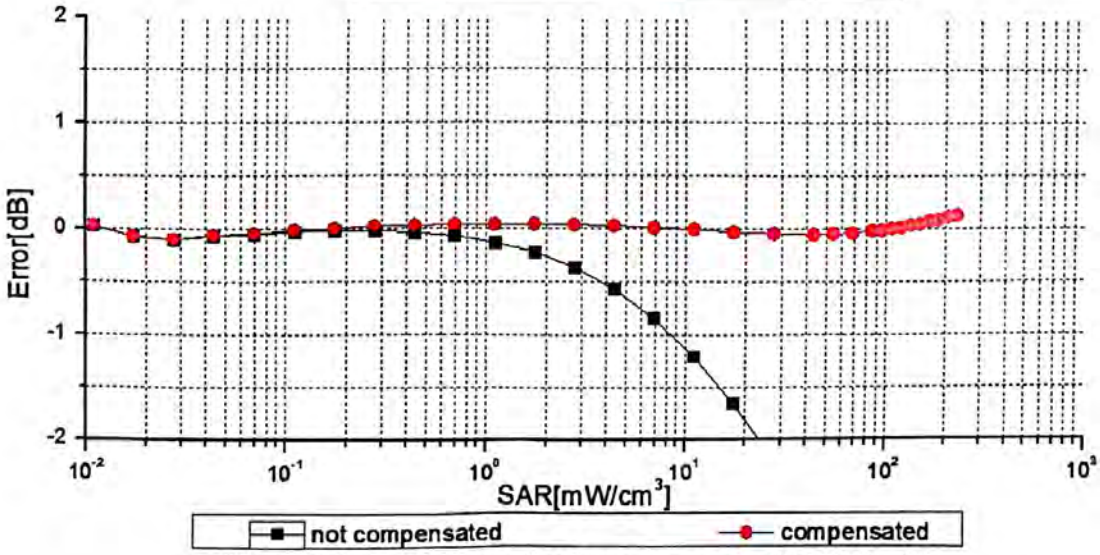

Uncertainty of Linearity Assessment: ±0.9% (k=2)

In Collaboration with
s p e a g
CALIBRATION LABORATORY
Add: No.51 Xueyuan Road, Haidian District, Beijing, 100191, China
Tel: +86-10-62304633-2512 Fax: +86-10-62304633-2504
E-mail: cttl@chinattl.com Http://www.chinattl.cn

Conversion Factor Assessment

f=750 MHz, WGLS R9(H_convF)

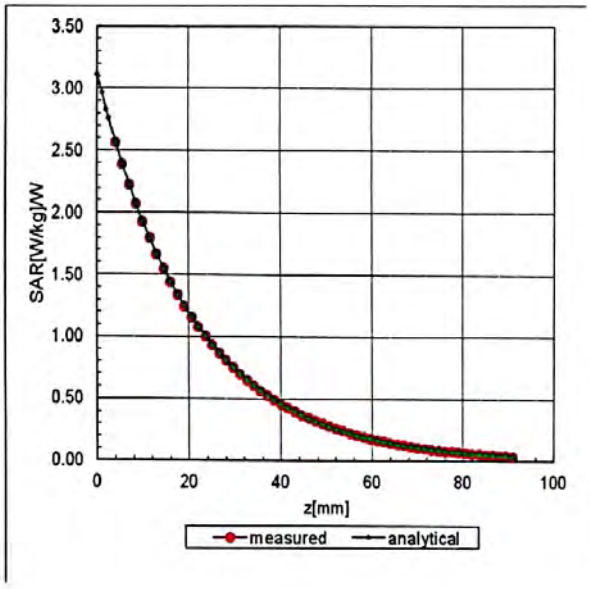

f=1750 MHz, WGLS R22(H_convF)

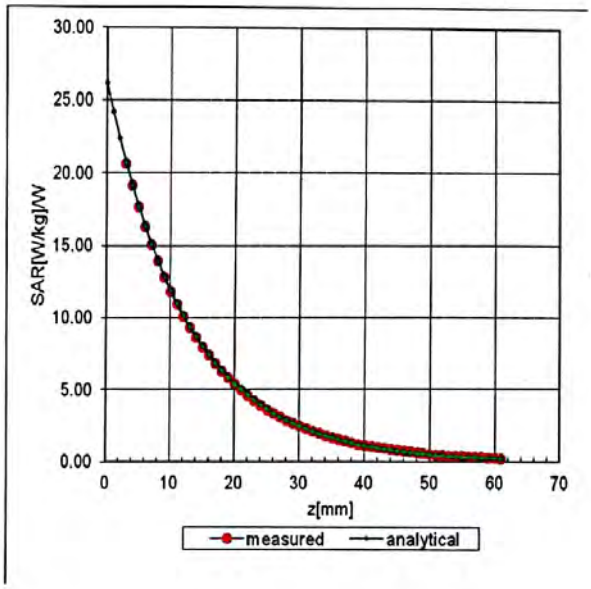

Deviation from Isotropy in Liquid

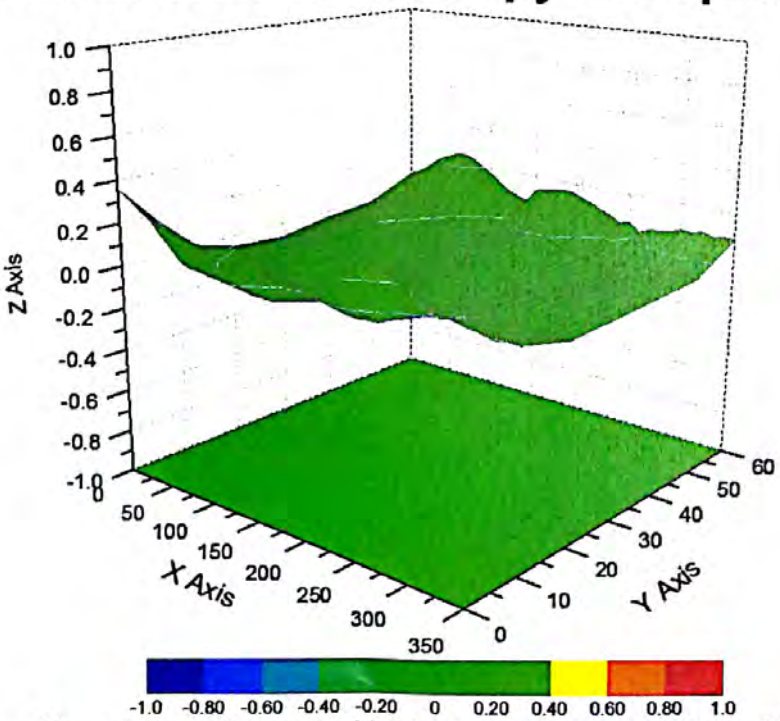

Uncertainty of Spherical Isotropy Assessment: ±3.2% (K=2)

In Collaboration with
s p e a g
CALIBRATION LABORATORY
Add: No.51 Xueyuan Road, Haidian District, Beijing, 100191, China
Tel: +86-10-62304633-2512 Fax: +86-10-62304633-2504
E-mail: cttl@chinattl.com Http://www.chinattl.cn

DASY/EASY – Parameters of Probe: EX3DV4 – SN: 3962

Other Probe Parameters

Sensor Arrangement	Triangular
Connector Angle (°)	151.2
Mechanical Surface Detection Mode	enabled
Optical Surface Detection Mode	disable
Probe Overall Length	337mm
Probe Body Diameter	10mm
Tip Length	9mm
Tip Diameter	2.5mm
Probe Tip to Sensor X Calibration Point	1mm
Probe Tip to Sensor Y Calibration Point	1mm
Probe Tip to Sensor Z Calibration Point	1mm
Recommended Measurement Distance from Surface	1.4mm

In Collaboration with
s p e a g
CALIBRATION LABORATORY

中国认可
国际互认
校准
CALIBRATION
CNAS L0570

Add: No.51 Xueyuan Road, Haidian District, Beijing, 100191, China
Tel: +86-10-62304633-2512 Fax: +86-10-62304633-2504
E-mail: cttl@chinattl.com Http://www.chinattl.cn

Client **Amphenol** **Certificate No: Z19-60035**

CALIBRATION CERTIFICATE

Object	ES3DV3 - SN:3121
Calibration Procedure(s)	FF-Z11-004-01 Calibration Procedures for Dosimetric E-field Probes
Calibration date:	February 25, 2019

This calibration Certificate documents the traceability to national standards, which realize the physical units of measurements(SI). The measurements and the uncertainties with confidence probability are given on the following pages and are part of the certificate.

All calibrations have been conducted in the closed laboratory facility: environment temperature(22±3)°C and humidity<70%.

Calibration Equipment used (M&TE critical for calibration)

Primary Standards	ID #	Cal Date(Calibrated by, Certificate No.)	Scheduled Calibration
Power Meter NRP2	101919	20-Jun-18 (CTTL, No.J18X05032)	Jun-19
Power sensor NRP-Z91	101547	20-Jun-18 (CTTL, No.J18X05032)	Jun-19
Power sensor NRP-Z91	101548	20-Jun-18 (CTTL, No.J18X05032)	Jun-19
Reference10dBAttenuator	18N50W-10dB	09-Feb-18(CTTL, No.J18X01133)	Feb-20
Reference20dBAttenuator	18N50W-20dB	09-Feb-18(CTTL, No.J18X01132)	Feb-20
Reference Probe EX3DV4	SN 7514	27-Aug-18(SPEAG,No.EX3-7514_Aug18)	Aug-19
DAE4	SN 1555	20-Aug-18(SPEAG, No.DAE4-1555_Aug18)	Aug -19
Secondary Standards	**ID #**	**Cal Date(Calibrated by, Certificate No.)**	**Scheduled Calibration**
SignalGeneratorMG3700A	6201052605	21-Jun-18 (CTTL, No.J18X05033)	Jun-19
Network Analyzer E5071C	MY46110673	24-Jan-18 (CTTL, No.J18X00561)	Jan -19

	Name	Function	Signature
Calibrated by:	Yu Zongying	SAR Test Engineer	
Reviewed by:	Lin Hao	SAR Test Engineer	
Approved by:	Qi Dianyuan	SAR Project Leader	

Issued: February 27, 2019

This calibration certificate shall not be reproduced except in full without written approval of the laboratory.

Add: No.51 Xueyuan Road, Haidian District, Beijing, 100191, China
Tel: +86-10-62304633-2512 Fax: +86-10-62304633-2504
E-mail: cttl@chinattl.com Http://www.chinattl.cn

Glossary:

TSL	tissue simulating liquid
NORMx,y,z	sensitivity in free space
ConvF	sensitivity in TSL / NORMx,y,z
DCP	diode compression point
CF	crest factor (1/duty_cycle) of the RF signal
A,B,C,D	modulation dependent linearization parameters
Polarization Φ	Φ rotation around probe axis
Polarization θ	θ rotation around an axis that is in the plane normal to probe axis (at measurement center), i θ=0 is normal to probe axis
Connector Angle	information used in DASY system to align probe sensor X to the robot coordinate system

Calibration is Performed According to the Following Standards:

a) IEEE Std 1528-2013, "IEEE Recommended Practice for Determining the Peak Spatial-Averaged Specific Absorption Rate (SAR) in the Human Head from Wireless Communications Devices: Measurement Techniques", June 2013

b) IEC 62209-1, "Measurement procedure for the assessment of Specific Absorption Rate (SAR) from hand-held and body-mounted devices used next to the ear (frequency range of 300 MHz to 6 GHz)", July 2016

c) IEC 62209-2, "Procedure to determine the Specific Absorption Rate (SAR) for wireless communication devices used in close proximity to the human body (frequency range of 30 MHz to 6 GHz)", March 2010

d) KDB 865664, "SAR Measurement Requirements for 100 MHz to 6 GHz"

Methods Applied and Interpretation of Parameters:

- *NORMx,y,z:* Assessed for E-field polarization θ=0 (f≤900MHz in TEM-cell; f>1800MHz: waveguide). NORMx,y,z are only intermediate values, i.e., the uncertainties of NORMx,y,z does not effect the E^2-field uncertainty inside TSL (see below ConvF).
- *NORM(f)x,y,z = NORMx,y,z* frequency_response* (see Frequency Response Chart). This linearization is implemented in DASY4 software versions later than 4.2. The uncertainty of the frequency response is included in the stated uncertainty of ConvF.
- *DCPx,y,z:* DCP are numerical linearization parameters assessed based on the data of power sweep (no uncertainty required). DCP does not depend on frequency nor media.
- PAR: PAR is the Peak to Average Ratio that is not calibrated but determined based on the signal characteristics.
- *Ax,y,z; Bx,y,z; Cx,y,z;VRx,y,z:*A,B,C are numerical linearization parameters assessed based on the data of power sweep for specific modulation signal. The parameters do not depend on frequency nor media. VR is the maximum calibration range expressed in RMS voltage across the diode.
- *ConvF and Boundary Effect Parameters:* Assessed in flat phantom using E-field (or Temperature Transfer Standard for f≤800MHz) and inside waveguide using analytical field distributions based on power measurements for f >800MHz. The same setups are used for assessment of the parameters applied for boundary compensation (alpha, depth) of which typical uncertainty valued are given. These parameters are used in DASY4 software to improve probe accuracy close to the boundary. The sensitivity in TSL corresponds to NORMx,y,z* ConvF whereby the uncertainty corresponds to that given for ConvF. A frequency dependent ConvF is used in DASY version 4.4 and higher which allows extending the validity from±50MHz to±100MHz.
- *Spherical isotropy (3D deviation from isotropy):* in a field of low gradients realized using a flat phantom exposed by a patch antenna.
- *Sensor Offset:* The sensor offset corresponds to the offset of virtual measurement center from the probe tip (on probe axis). No tolerance required.
- *Connector Angle:* The angle is assessed using the information gained by determining the *NORMx* (no uncertainty required).

In Collaboration with
s p e a g
CALIBRATION LABORATORY
Add: No.51 Xueyuan Road, Haidian District, Beijing, 100191, China
Tel: +86-10-62304633-2512 Fax: +86-10-62304633-2504
E-mail: cttl@chinattl.com Http://www.chinattl.cn

Probe ES3DV3

SN: 3121

Calibrated: February 25, 2019

Calibrated for DASY/EASY Systems

(Note: non-compatible with DASY2 system!)

In Collaboration with
s p e a g
CALIBRATION LABORATORY
Add: No.51 Xueyuan Road, Haidian District, Beijing, 100191, China
Tel: +86-10-62304633-2512 Fax: +86-10-62304633-2504
E-mail: cttl@chinattl.com Http://www.chinattl.cn

DASY/EASY – Parameters of Probe: ES3DV3 - SN: 3121

Basic Calibration Parameters

	Sensor X	Sensor Y	Sensor Z	Unc (k=2)
Norm(μV/(V/m)²)[A]	1.13	1.27	1.25	±10.0%
DCP(mV)[B]	106.0	103.9	103.8	

Modulation Calibration Parameters

UID	Communication System Name		A dB	B dB√μV	C	D dB	VR mV	Unc[E] (k=2)
0	CW	X	0.0	0.0	1.0	0.00	272.3	±2.3%
		Y	0.0	0.0	1.0		283.8	
		Z	0.0	0.0	1.0		284.6	

The reported uncertainty of measurement is stated as the standard uncertainty of Measurement multiplied by the coverage factor k=2, which for a normal distribution Corresponds to a coverage probability of approximately 95%.

[A] The uncertainties of Norm X, Y, Z do not affect the E^2-field uncertainty inside TSL (see Page 5 and Page 6).
[B] Numerical linearization parameter: uncertainty not required.
[E] Uncertainly is determined using the max. deviation from linear response applying rectangular distribution and is expressed for the square of the field value.

In Collaboration with
s p e a g
CALIBRATION LABORATORY
Add: No.51 Xueyuan Road, Haidian District, Beijing, 100191, China
Tel: +86-10-62304633-2512 Fax: +86-10-62304633-2504
E-mail: cttl@chinattl.com Http://www.chinattl.cn

DASY/EASY – Parameters of Probe: ES3DV3 - SN: 3121

Calibration Parameter Determined in Head Tissue Simulating Media

f [MHz][C]	Relative Permittivity [F]	Conductivity (S/m) [F]	ConvF X	ConvF Y	ConvF Z	Alpha[G]	Depth[G] (mm)	Unct. (k=2)
750	41.9	0.89	6.33	6.33	6.33	0.38	1.45	±12.1%
900	41.5	0.97	6.21	6.21	6.21	0.36	1.54	±12.1%
1750	40.1	1.37	5.25	5.25	5.25	0.62	1.25	±12.1%
1810	40.0	1.40	5.08	5.08	5.08	0.68	1.21	±12.1%
2100	39.8	1.49	4.96	4.96	4.96	0.68	1.23	±12.1%
2450	39.2	1.80	4.60	4.60	4.60	0.90	1.10	±12.1%
2600	39.0	1.96	4.41	4.41	4.41	0.90	1.10	±12.1%

[C] Frequency validity above 300 MHz of ±100MHz only applies for DASY v4.4 and higher (Page 2), else it is restricted to ±50MHz. The uncertainty is the RSS of ConvF uncertainty at calibration frequency and the uncertainty for the indicated frequency band. Frequency validity below 300 MHz is ± 10, 25, 40, 50 and 70 MHz for ConvF assessments at 30, 64, 128, 150 and 220 MHz respectively. Above 5 GHz frequency validity can be extended to ± 110 MHz.

[F] At frequency below 3 GHz, the validity of tissue parameters (ε and σ) can be relaxed to ±10% if liquid compensation formula is applied to measured SAR values. At frequencies above 3 GHz, the validity of tissue parameters (ε and σ) is restricted to ±5%. The uncertainty is the RSS of the ConvF uncertainty for indicated target tissue parameters.

[G] Alpha/Depth are determined during calibration. SPEAG warrants that the remaining deviation due to the boundary effect after compensation is always less than ± 1% for frequencies below 3 GHz and below ± 2% for the frequencies between 3-6 GHz at any distance larger than half the probe tip diameter from the boundary.

In Collaboration with
s p e a g
CALIBRATION LABORATORY
Add: No.51 Xueyuan Road, Haidian District, Beijing, 100191, China
Tel: +86-10-62304633-2512 Fax: +86-10-62304633-2504
E-mail: cttl@chinattl.com Http://www.chinattl.cn

DASY/EASY – Parameters of Probe: ES3DV3 - SN: 3121

Calibration Parameter Determined in Body Tissue Simulating Media

f [MHz][C]	Relative Permittivity [F]	Conductivity (S/m) [F]	ConvF X	ConvF Y	ConvF Z	Alpha[G]	Depth[G] (mm)	Unct. (k=2)
750	55.5	0.96	6.31	6.31	6.31	0.40	1.40	±12.1%
900	55.0	1.05	6.15	6.15	6.15	0.51	1.42	±12.1%
1750	53.4	1.49	4.99	4.99	4.99	0.59	1.30	±12.1%
1810	53.3	1.52	4.85	4.85	4.85	0.61	1.30	±12.1%
2100	53.2	1.62	4.73	4.73	4.73	0.72	1.24	±12.1%
2450	52.7	1.95	4.47	4.47	4.47	0.90	1.10	±12.1%
2600	52.5	2.16	4.30	4.30	4.30	0.90	1.05	±12.1%

[C] Frequency validity above 300 MHz of ±100MHz only applies for DASY v4.4 and higher (Page 2), else it is restricted to ±50MHz. The uncertainty is the RSS of ConvF uncertainty at calibration frequency and the uncertainty for the indicated frequency band. Frequency validity below 300 MHz is ± 10, 25, 40, 50 and 70 MHz for ConvF assessments at 30, 64, 128, 150 and 220 MHz respectively. Above 5 GHz frequency validity can be extended to ± 110 MHz.

[F] At frequency below 3 GHz, the validity of tissue parameters (ε and σ) can be relaxed to ±10% if liquid compensation formula is applied to measured SAR values. At frequencies above 3 GHz, the validity of tissue parameters (ε and σ) is restricted to ±5%. The uncertainty is the RSS of the ConvF uncertainty for indicated target tissue parameters.

[G] Alpha/Depth are determined during calibration. SPEAG warrants that the remaining deviation due to the boundary effect after compensation is always less than ± 1% for frequencies below 3 GHz and below ± 2% for the frequencies between 3-6 GHz at any distance larger than half the probe tip diameter from the boundary.

In Collaboration with
s p e a g
CALIBRATION LABORATORY
Add: No.51 Xueyuan Road, Haidian District, Beijing, 100191, China
Tel: +86-10-62304633-2512 Fax: +86-10-62304633-2504
E-mail: cttl@chinattl.com Http://www.chinattl.cn

Frequency Response of E-Field

(TEM-Cell: ifi110 EXX, Waveguide: R22)

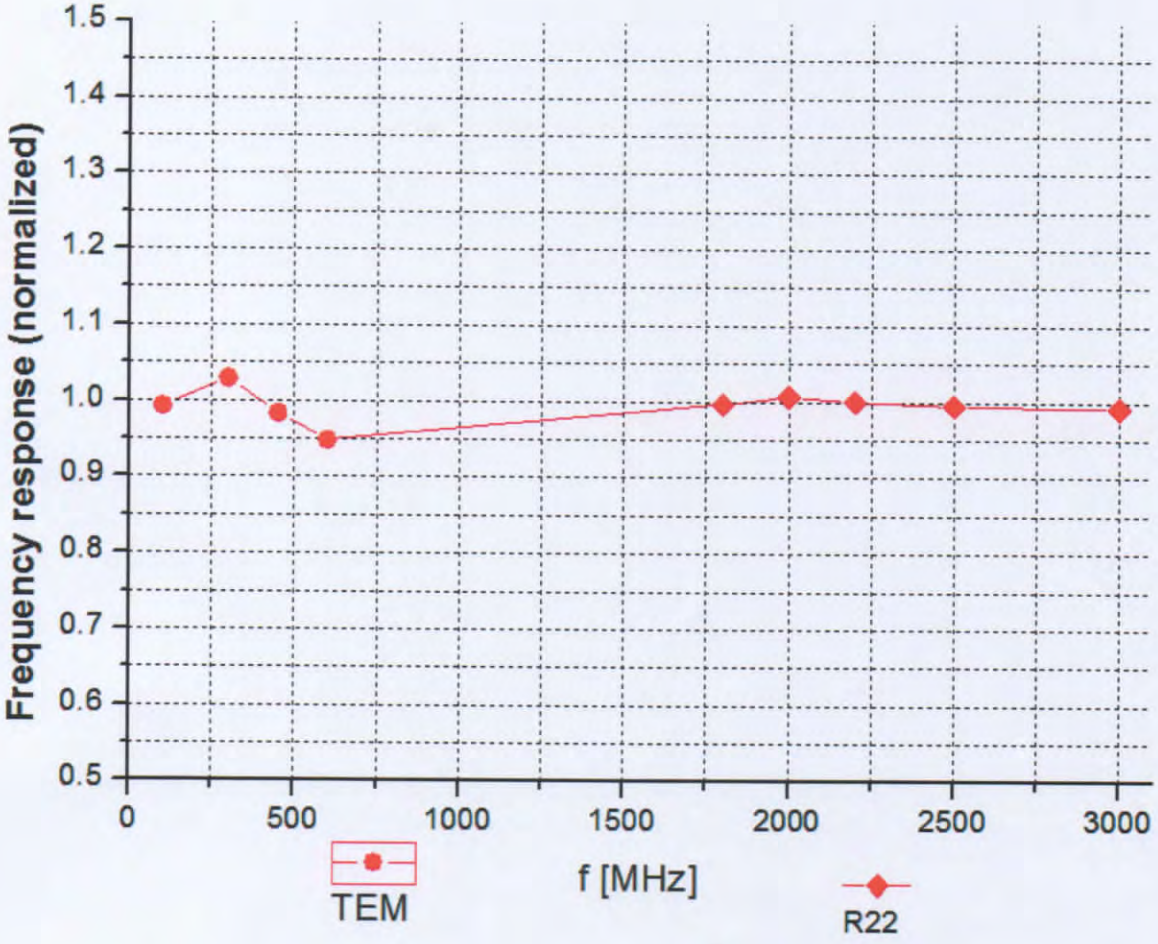

Uncertainty of Frequency Response of E-field: ±7.4% (k=2)

In Collaboration with
s p e a g
CALIBRATION LABORATORY
Add: No.51 Xueyuan Road, Haidian District, Beijing, 100191, China
Tel: +86-10-62304633-2512 Fax: +86-10-62304633-2504
E-mail: cttl@chinattl.com Http://www.chinattl.cn

Receiving Pattern (Φ), θ=0°

f=600 MHz, TEM

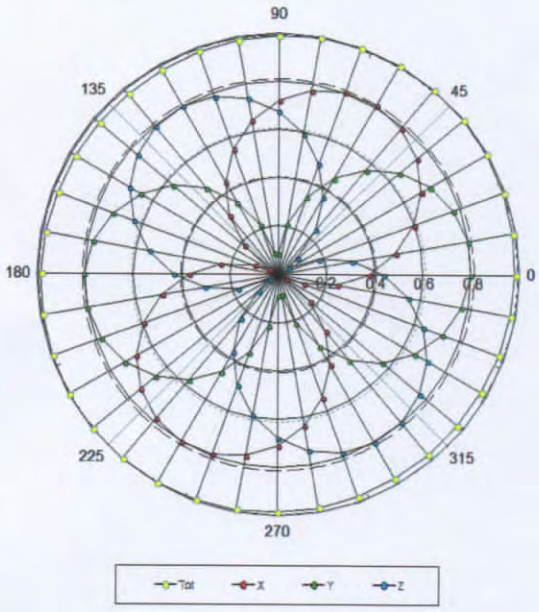

f=1800 MHz, R22

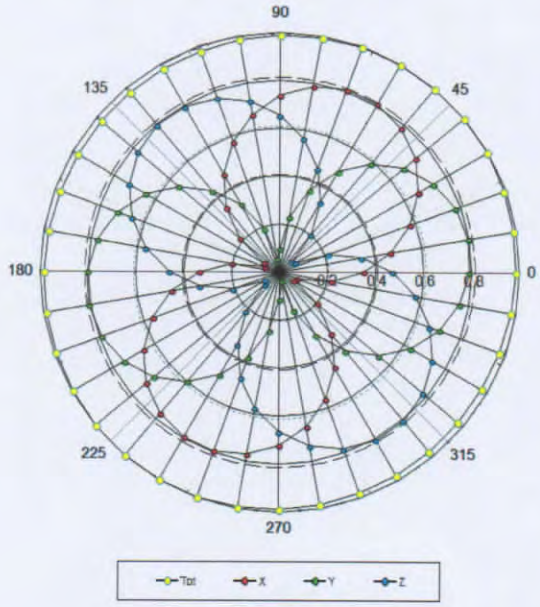

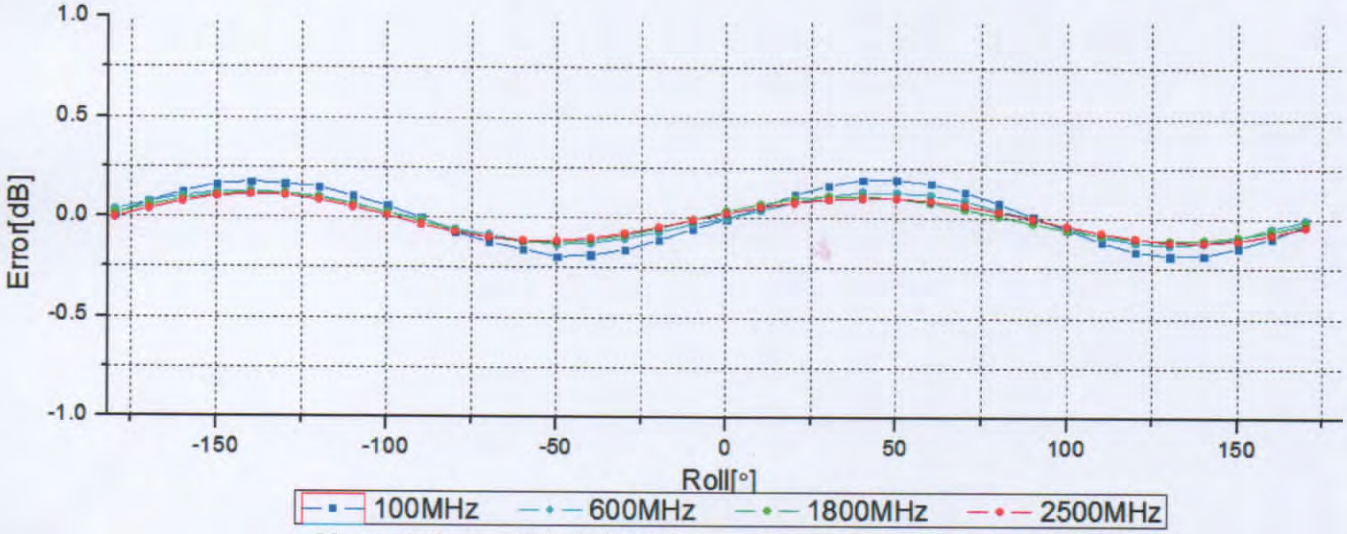

Uncertainty of Axial Isotropy Assessment: ±1.2% (k=2)

Add: No.51 Xueyuan Road, Haidian District, Beijing, 100191, China
Tel: +86-10-62304633-2512 Fax: +86-10-62304633-2504
E-mail: cttl@chinattl.com Http://www.chinattl.cn

Dynamic Range f(SAR$_{head}$)
(TEM cell, f = 900 MHz)

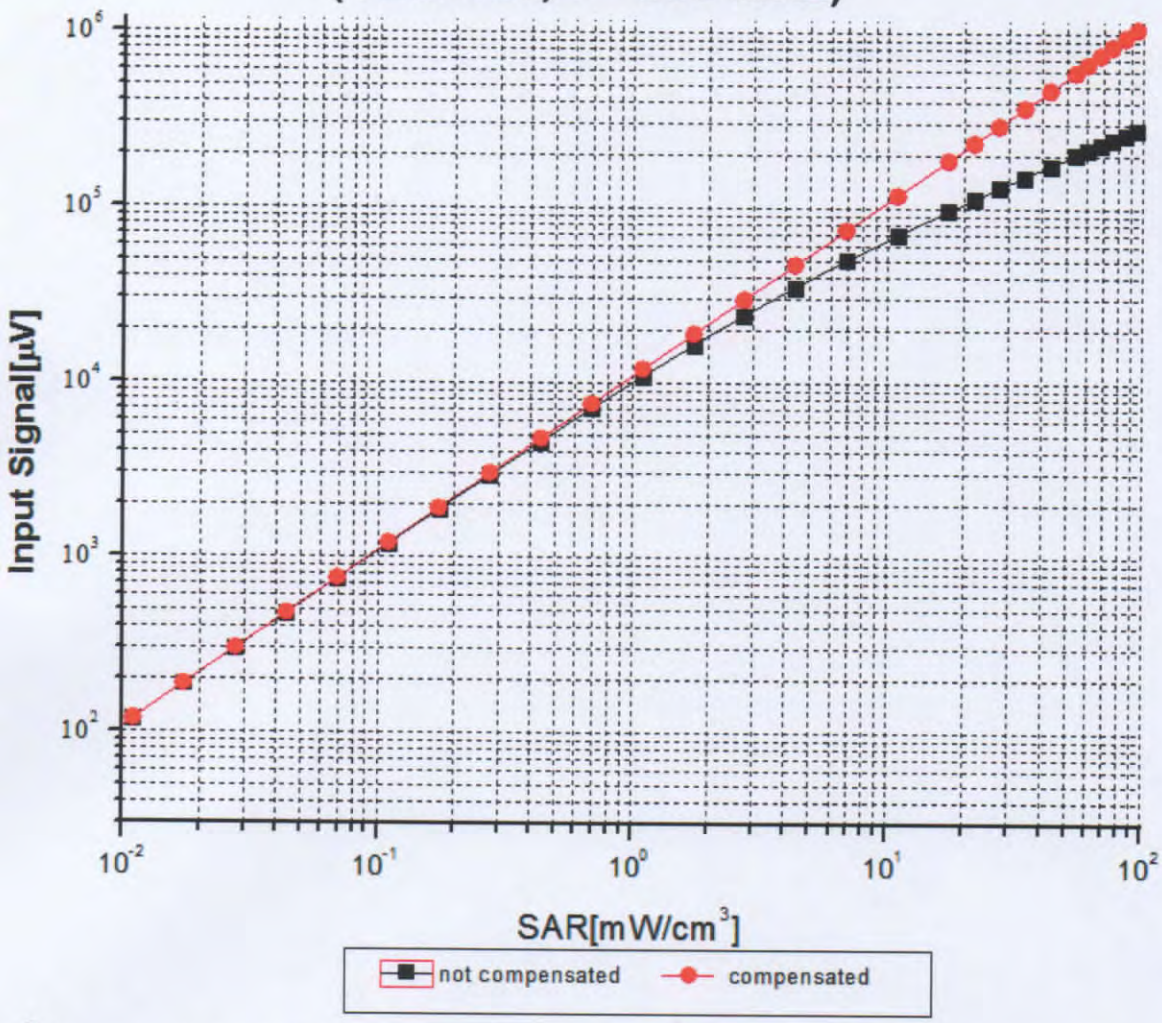

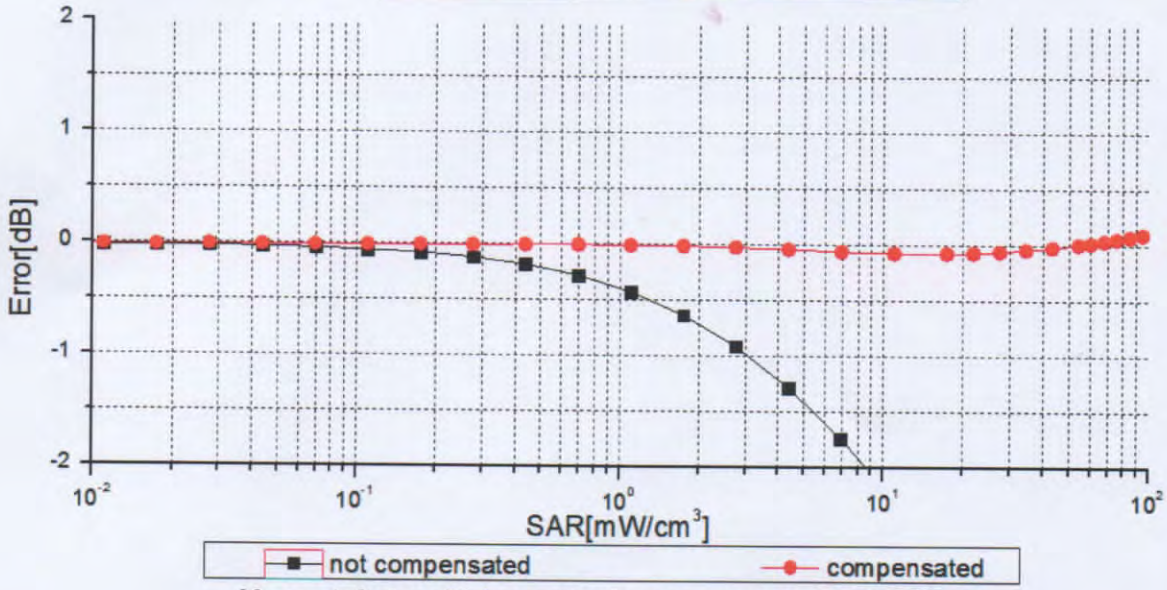

Uncertainty of Linearity Assessment: ±0.9% (k=2)

In Collaboration with
s p e a g
CALIBRATION LABORATORY
Add: No.51 Xueyuan Road, Haidian District, Beijing, 100191, China
Tel: +86-10-62304633-2512 Fax: +86-10-62304633-2504
E-mail: cttl@chinattl.com Http://www.chinattl.cn

Conversion Factor Assessment

f=750 MHz, WGLS R9(H_convF)

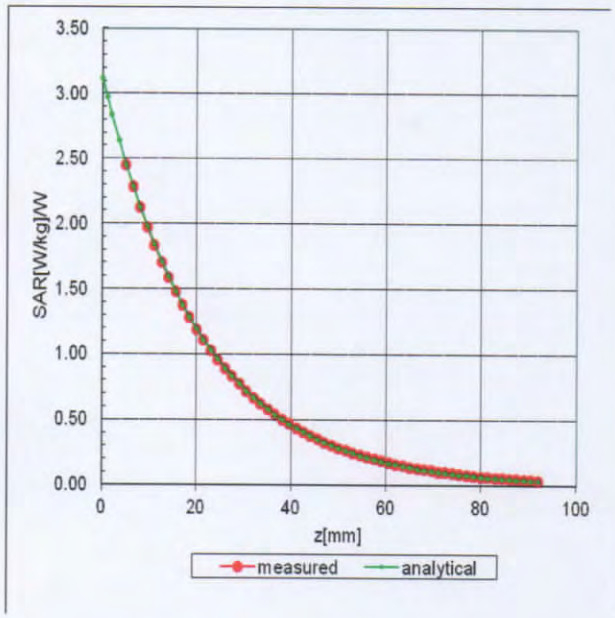

f=1750 MHz, WGLS R22(H_convF)

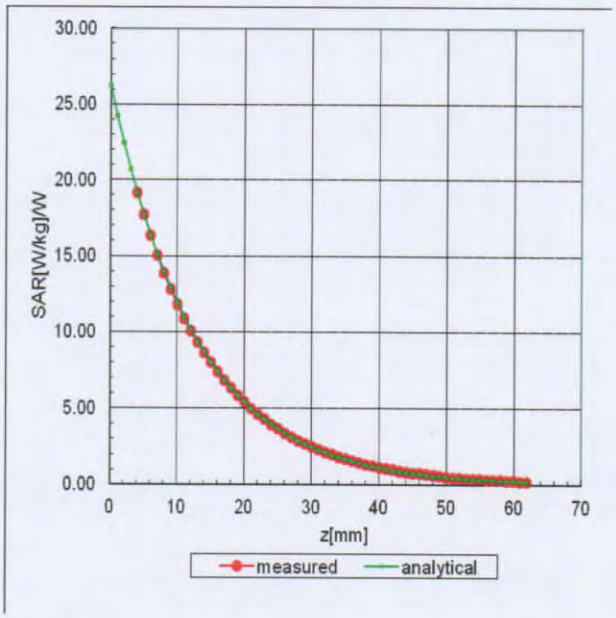

Deviation from Isotropy in Liquid

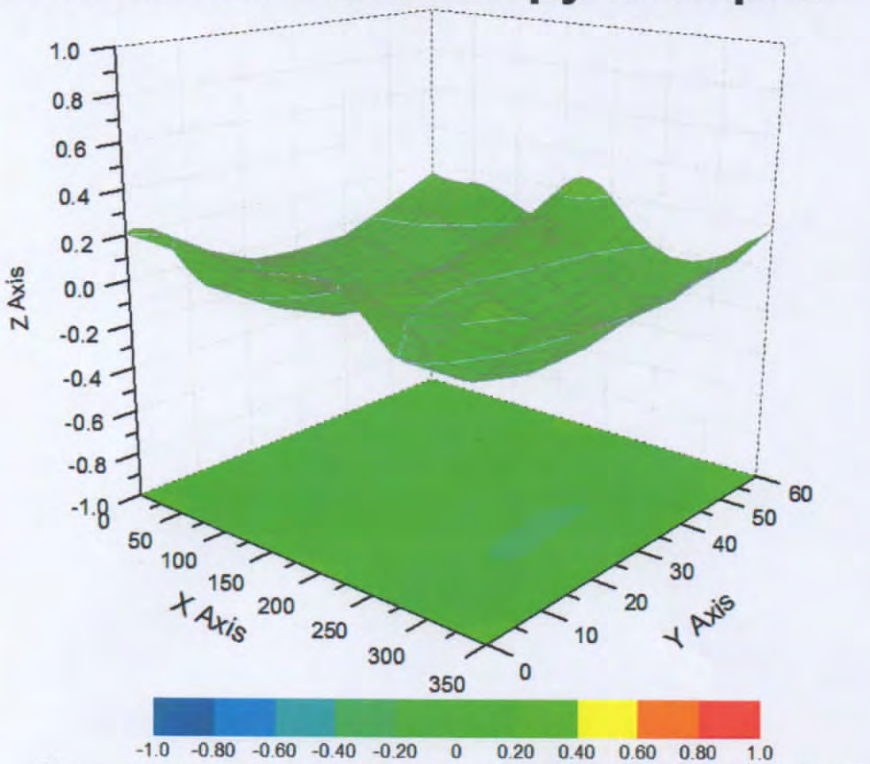

Uncertainty of Spherical Isotropy Assessment: ±3.2% (K=2)

In Collaboration with
s p e a g
CALIBRATION LABORATORY
Add: No.51 Xueyuan Road, Haidian District, Beijing, 100191, China
Tel: +86-10-62304633-2512 Fax: +86-10-62304633-2504
E-mail: cttl@chinattl.com Http://www.chinattl.cn

DASY/EASY – Parameters of Probe: ES3DV3 - SN: 3121

Other Probe Parameters

Sensor Arrangement	Triangular
Connector Angle (°)	141.2
Mechanical Surface Detection Mode	enabled
Optical Surface Detection Mode	disable
Probe Overall Length	337mm
Probe Body Diameter	10mm
Tip Length	10mm
Tip Diameter	4mm
Probe Tip to Sensor X Calibration Point	2mm
Probe Tip to Sensor Y Calibration Point	2mm
Probe Tip to Sensor Z Calibration Point	2mm
Recommended Measurement Distance from Surface	3mm

Dipole D835V2 SN 4d105				
Head Liquid				
Date of Measurement	Return Loss(dB)	Δ %	Impedance (Ω)	ΔΩ
2016-12-08	-29.1	/	49.2	/
2017-12-07	-29.7	2.06%	51.3	2.1Ω
2018-12-06	-29.5	1.03%	50.6	1.4
Body Liquid				
Date of Measurement	Return Loss(dB)	Δ %	Impedance (Ω)	ΔΩ
2016-12-08	-25.1	/	45.8	/
2017-12-07	-25.5	1.59%	47.7	1.9Ω
2018-12-06	-25.3	0.80%	46.6	0.8

Dipole D1750V2 SN 1149				
Head Liquid				
Date of Measurement	Return Loss(dB)	Δ %	Impedance (Ω)	ΔΩ
2016-06-23	-38.7	/	49	/
2017-06-22	-39.6	2.33%	52.2	3.2Ω
2018-06-21	-38.9	0.52%	51.8	2.8Ω
Body Liquid				
Date of Measurement	Return Loss(dB)	Δ %	Impedance (Ω)	ΔΩ
2016-06-23	-23.3	/	43.6	/
2017-06-22	-23.8	2.15%	46	2.4Ω
2018-06-21	-23.9	2.57%	45.7	2.1Ω

Dipole D1900V2 SN 5d028				
Head Liquid				
Date of Measurement	Return Loss(dB)	Δ %	Impedance (Ω)	ΔΩ
2016-12-07	-24.4	/	51.8	/
2017-12-06	-25.2	3.28%	53.6	1.8Ω
2018-12-05	-24.8	1.64%	52.8	1.0Ω
Body Liquid				
Date of Measurement	Return Loss(dB)	Δ %	Impedance (Ω)	ΔΩ
2016-12-07	-24.1	/	48.1	/
2017-12-06	-24.8	2.90%	49.6	1.5Ω
2018-12-05	-25.1	4.15%	50.3	2.2Ω

Dipole D2450V2 SN 733				
Head Liquid				
Date of Measurement	Return Loss(dB)	Δ %	Impedance (Ω)	ΔΩ
2016-12-07	-26.3	/	52.9	/
2017-12-06	-27.5	4.56%	56.1	3.2Ω
2018-12-05	-27.1	3.04%	55.7	2.8Ω
Body Liquid				
Date of Measurement	Return Loss(dB)	Δ %	Impedance (Ω)	ΔΩ
2016-12-07	-24.6	/	49.7	/
2017-12-06	-25.3	2.85%	51.8	2.1Ω
2018-12-05	-25.1	2.03%	52.1	2.4Ω

Dipole D2600V2 SN 1125				
Head Liquid				
Date of Measurement	Return Loss(dB)	Δ %	Impedance (Ω)	ΔΩ
2016-06-22	-25.9	/	49	/
2017-06-21	-26.4	1.93%	50.9	1.9Ω
2018-06-20	-26.7	3.09%	51.3	2.3Ω
Body Liquid				
Date of Measurement	Return Loss(dB)	Δ %	Impedance (Ω)	ΔΩ
2016-06-22	-24.2	/	45.7	/
2017-06-21	-25.4	4.96%	48.2	2.5Ω
2018-06-20	-24.9	2.89%	47.5	1.8Ω

Dipole D5GHzV2 SN 1165				
5250MHz Head Liquid				
Date of Measurement	Return Loss(dB)	Δ %	Impedance (Ω)	ΔΩ
2016-12-13	-23.6	/	49.1	/
2017-12-12	-24.2	2.54%	51.7	2.6Ω
2018-12-11	-23.9	1.27%	51.1	2.0Ω
5250MHz Body Liquid				
Date of Measurement	Return Loss(dB)	Δ %	Impedance (Ω)	ΔΩ
2016-12-13	-24.2	/	45.7	/
2017-12-12	-24.7	2.07%	49.1	3.4Ω
2018-12-11	-24.9	2.89%	49.5	3.8Ω
5600MHz Head Liquid				
Date of Measurement	Return Loss(dB)	Δ %	Impedance (Ω)	ΔΩ
2016-12-13	-27.5	/	54.1	/
2017-12-12	-28.3	2.91%	56.4	2.3Ω
2018-12-11	-28.6	4.00%	56.7	2.6Ω
5600MHz Body Liquid				
Date of Measurement	Return Loss(dB)	Δ %	Impedance (Ω)	ΔΩ
2016-12-13	-26.5	/	54.9	/
2017-12-12	-27.3	3.02%	58	3.1Ω
2018-12-11	-27.6	4.15%	58.2	3.3Ω
5750MHz Head Liquid				
Date of Measurement	Return Loss(dB)	Δ %	Impedance (Ω)	ΔΩ
2016-12-13	-27.6	/	52.4	/
2017-12-12	-28.5	3.26%	54.1	1.7Ω
2018-12-11	-28.7	3.99%	54.6	2.2Ω
5750MHz Body Liquid				
Date of Measurement	Return Loss(dB)	Δ %	Impedance (Ω)	ΔΩ
2016-12-13	-26.4	/	53.3	/
2017-12-12	-27.1	2.65%	55.9	2.6Ω
2018-12-11	-27.5	4.17%	56.3	3.0Ω