LampSite

Site Maintenance Guide

Issue 02

Date 2014-05-27

HUAWEI TECHNOLOGIES CO., LTD.

Copyright © Huawei Technologies Co., Ltd. 2014. All rights reserved.

No part of this document may be reproduced or transmitted in any form or by any means without prior written consent of Huawei Technologies Co., Ltd.

Trademarks and Permissions

HUAWEI and other Huawei trademarks are trademarks of Huawei Technologies Co., Ltd.
All other trademarks and trade names mentioned in this document are the property of their respective holders.

Notice

The purchased products, services and features are stipulated by the contract made between Huawei and the customer. All or part of the products, services and features described in this document may not be within the purchase scope or the usage scope. Unless otherwise specified in the contract, all statements, information, and recommendations in this document are provided "AS IS" without warranties, guarantees or representations of any kind, either express or implied.

The information in this document is subject to change without notice. Every effort has been made in the preparation of this document to ensure accuracy of the contents, but all statements, information, and recommendations in this document do not constitute a warranty of any kind, express or implied.

Huawei Technologies Co., Ltd.

Address: Huawei Industrial Base
Bantian, Longgang
Shenzhen 518129
People's Republic of China

Website: http://www.huawei.com

Email: support@huawei.com

About This Document

Overview

This document describes routine maintenance items for a RHUB3908 and pRRU3901, such as equipment maintenance, and power-on and power-off operations. It also explains how to replace the components and modules.

Product Version

The following table lists the product version related to this document.

Product Name	Product Version
RHUB3908 (referred to as RHUB in this document)	V100R009C00 and later versions Single-mode versions mapping V100R009C00: ● NodeB: V200R016C00 ● eNodeB: V100R007C00
pRRU3901 (referred to as pRRU in this document)	

Intended Audience

This document is intended for:

- System engineers
- Site maintenance engineers

Organization

1 Changes in LampSite Site Maintenance Guide

This chapter provides information about the changes in different document versions of *LampSite Site Maintenance Guide*.

2 RHUB Maintenance Items

Copyright © Huawei Technologies Co., Ltd.

This chapter describes the RHUB maintenance items, involving the equipment room, equipment, power system, and grounding system.

3 pRRU Maintenance Items

This chapter describes the pRRU maintenance items, involving equipment and power system.

4 Powering On and Powering Off the RHUB

After the RHUB is powered on, check the indicator status. Power off the RHUB in normal or emergency mode as required.

5 Powering On and Powering Off the pRRU

After the pRRU is powered on, check the power supply voltage and indicator status. Power off the pRRU based on the power supply mode.

6 Replacing the RHUB

The RHUB is an indoor convergence unit. It converges multiple pRRUs to the BBU. Replacing the RHUB interrupts services carried on the serving cell.

7 Replacing an Optical Module

An optical module provides a port for opto-electronic conversion. This enables the transmission between the RHUB and BBU through the optical fiber. Replacing the optical module requires removing the optical fibers. This interrupts all the services.

8 Replacing the RF Daughter Board

This section describes the procedures for replacing the RF daughter board of the pRRU. A pRRU can have two transmission ports or three transmission ports, requiring the same installation operations. This section uses the pRRU with three transmission ports as an example. Replacing an RF daughter board interrupts all the services carried on the pRRU.

9 Replacing the Wi-Fi Daughter Board

This section describes the procedures for replacing the Wi-Fi daughter board, which applies only to a pRRU with three transmission ports.Replacing an Wi-Fi daughter board interrupts all the services carried on the pRRU.

10 Replacing the pDock Mother Board

This section describes the procedure for replacing the pDock mother board. Replacing the pDock mother board of a pRRU will interrupt all services carried on the pRRU. A pDock mother board can have two transmission ports or three transmission ports, requiring the same installation operations. This section uses the pDock mother board with three transmission ports as an example.

Conventions

Symbol Conventions

The symbols that may be found in this document are defined as follows.

Copyright © Huawei Technologies Co., Ltd.

Symbol	Description
DANGER	Indicates an imminently hazardous situation which, if not avoided, will result in death or serious injury.
WARNING	Indicates a potentially hazardous situation which, if not avoided, could result in death or serious injury.
CAUTION	Indicates a potentially hazardous situation which, if not avoided, may result in minor or moderate injury.
NOTICE	Indicates a potentially hazardous situation which, if not avoided, could result in equipment damage, data loss, performance deterioration, or unanticipated results. NOTICE is used to address practices not related to personal injury.
NOTE	Calls attention to important information, best practices and tips. NOTE is used to address information not related to personal injury, equipment damage, and environment deterioration.

General Conventions

The general conventions that may be found in this document are defined as follows.

Convention	Description
Times New Roman	Normal paragraphs are in Times New Roman.
Boldface	Names of files, directories, folders, and users are in **boldface**. For example, log in as user **root**.
Italic	Book titles are in *italics*.
`Courier New`	Examples of information displayed on the screen are in Courier New.

Command Conventions

The command conventions that may be found in this document are defined as follows.

Convention	Description
Boldface	The keywords of a command line are in **boldface**.
Italic	Command arguments are in *italics*.

Copyright © Huawei Technologies Co., Ltd.

Convention	Description
[ ]	Items (keywords or arguments) in brackets [ ] are optional.
{ x | y | ... }	Optional items are grouped in braces and separated by vertical bars. One item is selected.
[x | y | ...]	Optional items are grouped in brackets and separated by vertical bars. One item is selected or no item is selected.
{ x | y | ... }*	Optional items are grouped in braces and separated by vertical bars. A minimum of one item or a maximum of all items can be selected.
[x | y | ...]*	Optional items are grouped in brackets and separated by vertical bars. Several items or no item can be selected.

GUI Conventions

The GUI conventions that may be found in this document are defined as follows.

Convention	Description
Boldface	Buttons, menus, parameters, tabs, window, and dialog titles are in **boldface**. For example, click **OK**.
>	Multi-level menus are in **boldface** and separated by the ">" signs. For example, choose **File** > **Create** > **Folder**.

Keyboard Operations

The keyboard operations that may be found in this document are defined as follows.

Format	Description
Key	Press the key. For example, press **Enter** and press **Tab**.
Key 1+**Key 2**	Press the keys concurrently. For example, pressing **Ctrl**+**Alt**+**A** means the three keys should be pressed concurrently.
Key 1, **Key 2**	Press the keys in turn. For example, pressing **Alt**, **A** means the two keys should be pressed in turn.

Mouse Operations

The mouse operations that may be found in this document are defined as follows.

Copyright © Huawei Technologies Co., Ltd.

Action	Description
Click	Select and release the primary mouse button without moving the pointer.
Double-click	Press the primary mouse button twice continuously and quickly without moving the pointer.
Drag	Press and hold the primary mouse button and move the pointer to a certain position.

Copyright © Huawei Technologies Co., Ltd.

Contents

About This Document.....ii
1 Changes in LampSite Site Maintenance Guide.....1
2 RHUB Maintenance Items.....4
3 pRRU Maintenance Items.....8
4 Powering On and Powering Off the RHUB.....10
4.1 Powering On the RHUB.....11
4.2 Powering Off the RHUB.....12
5 Powering On and Powering Off the pRRU.....13
5.1 Powering On the pRRU.....14
5.2 Powering Off the pRRU.....15
6 Replacing the RHUB.....16
7 Replacing an Optical Module.....20
8 Replacing the RF Daughter Board.....23
9 Replacing the Wi-Fi Daughter Board.....29
10 Replacing the pDock Mother Board.....35

Copyright © Huawei Technologies Co., Ltd.

1 Changes in LampSite Site Maintenance Guide

This chapter provides information about the changes in different document versions of *LampSite Site Maintenance Guide*.

02 (2014-05-27)

This is the second commercial release.

Compared with 01 (2014-04-26), no information is added.

Compared with 01 (2014-04-26), this issue incorporates the following change:

Content	Change Description
Entire document	Added the descriptions about the LTE FDD +LTE FDD mode.

Compared with 01 (2014-04-26), no information is deleted.

01 (2014-04-26)

This is the first commercial release.

Compared with Draft C (2014-03-26), no information is added.

Compared with Draft C (2014-03-26), this issue incorporates the following change:

Content	Change Description
Entire document	Changed the pRRU name from pRRU with two Ethernet ports to pRRU with two transmission ports, and pRRU with three Ethernet ports to pRRU with three transmission ports.

Copyright © Huawei Technologies Co., Ltd.

Content	Change Description
10 Replacing the pDock Mother Board	Changed the pDock name from pDock with two Ethernet ports to pDock with two transmission ports, and pDock with three Ethernet ports to pDock with three transmission ports.

Compared with Draft C (2014-03-26), this issue excludes the following topic:

- Replacing a PSU

Draft C (2014-03-26)

This is a draft release.

Compared with Draft B (2014-02-28), no information is added.

Compared with Draft B (2014-02-28), this issue incorporates the following change:

Content	Change Description
6 Replacing the RHUB	Deleted the operation of resetting the RHUB after replacing.

Compared with Draft B (2014-02-28), no information is deleted.

Draft B (2014-02-28)

This is a draft release.

Compared with draft A (2013-11-30), this issue includes the following new topic:

- **9 Replacing the Wi-Fi Daughter Board**

Compared with draft A (2013-11-30), this issue incorporates the following changes:

Content	Change Description
Entire document	Added descriptions about pRRUs with three transmission ports. Such pRRUs support integrated Wi-Fi services.
	Added the descriptions about the UMTS, LTE FDD and UMTS+LTE FDD mode.
About This Document	Optimized descriptions about matching product versions.
8 Replacing the RF Daughter Board	Added the procedures for removing and attaching labels.

Copyright © Huawei Technologies Co., Ltd.

Content	Change Description
9 Replacing the Wi-Fi Daughter Board	

Compared with draft A (2013-11-30), this issue excludes the following topic:

- Replacing the pRRU

Draft A (2013-11-30)

This is a draft release.

Copyright © Huawei Technologies Co., Ltd.

2 RHUB Maintenance Items

This chapter describes the RHUB maintenance items, involving the equipment room, equipment, power system, and grounding system.

Equipment Room Maintenance Items

Table 2-1 lists the equipment room maintenance items.

Table 2-1 Equipment room maintenance items

Item	Check Frequency	Operation	Reference Standard
Environment alarms in the equipment room	Daily	Check whether any power alarm, fire alarm, or smoke alarm is reported.	No power alarm, fire alarm, or smoke alarm is reported.
Temperature in the equipment room	Each time maintenance is performed	Record temperatures in the equipment room measured by a thermometer.	-5°C to 45°C
Humidity in the equipment room	Each time maintenance is performed	Record humidity in the equipment room measured by a hygrometer.	5%RH to 95%RH
Lighting system in the equipment room	Every other month	Check whether the routine lighting system and emergency lighting system are running properly.	-
Air conditioner	Every other month	Check whether the air conditioner is running properly.	-

Copyright © Huawei Technologies Co., Ltd.

Item	Check Frequency	Operation	Reference Standard
Disaster protection devices	Every one month	Check whether the disaster protection, equipment protection, and firefighting devices are normal.	● The equipment room is equipped with portable foam-type extinguishers, and the pressure and expiration date must be checked. ● The equipment room has no mice, ants, flying insects, or other risks.
Cleanness	Every one month	Check whether the cabinet, equipment housing, equipment interior, desktop, floor, door, and window are clean and tidy.	All these items are clean and tidy.

Equipment Maintenance Items

Table 2-2 lists the equipment maintenance items.

Table 2-2 Equipment maintenance items

Item	Check Frequency	Operation	Reference Standard
Fan in the PSU	Monthly or quarterly	Check whether the fan is working properly.	The fan works properly without any abnormal smell or sound.
Equipment surface	Monthly or quarterly	Check whether the equipment surface is intact.	The equipment surface is intact and the label of the cabinet is legible.
Equipment cleanness	Monthly or quarterly	Check whether the equipment is clean.	The equipment surface is clean.

Copyright © Huawei Technologies Co., Ltd.

Item	Check Frequency	Operation	Reference Standard
Indicators	Monthly or quarterly	Check whether the indicators on the equipment are working properly.	For details about the indicator status, see RHUB Ports and Indicators in *LampSite Hardware Description*.
Electrostatic discharge (ESD) wrist strap	Quarterly	Check the ESD wrist strap in either of the following ways: ● Use an ESD wrist strap tester to check the ESD wrist strap. ● Use a multimeter to test the ground resistance of the ESD wrist strap.	If you use an ESD wrist strap tester, the GOOD indicator is on. If you use a multimeter, the ground resistance of the ESD wrist strap ranges from 0.75 ohms to 10 ohms.

Maintenance Items for the Power System and Grounding System

Table 2-3 lists the maintenance items for the power system and grounding system.

Table 2-3 Maintenance items for the power system and grounding system

Item	Check Frequency	Operation	Reference Standard
Power cables	Monthly or quarterly	Check the power cable connections.	The power cables are securely connected and not deteriorating. The joints are not corroded.
Voltage	Monthly or quarterly	Use a multimeter to measure the voltage of the power supply.	The voltage is in the permissible range.
PGND cables	Monthly or quarterly	Checks whether the PGND cables and ground bar are securely connected.	The joints are secure and not corroded. The PGND cables and ground bar are not deteriorated and are protected from corrosion.

Copyright © Huawei Technologies Co., Ltd.

Item	Check Frequency	Operation	Reference Standard
Ground resistance	Monthly or quarterly	Use a ground resistance tester to measure the ground resistance and record the measurement result.	The ground resistance is equal to or less than 10 ohms.

Copyright © Huawei Technologies Co., Ltd.

3 pRRU Maintenance Items

This chapter describes the pRRU maintenance items, involving equipment and power system.

Equipment Maintenance Items

Table 3-1 lists the equipment maintenance items for the pRRU.

Table 3-1 Equipment maintenance items

Item	Check Frequency	Operation	Reference Standard
Equipment surface	Monthly or quarterly	Check whether the equipment surface is intact.	The equipment surface is intact and the label of the cabinet is legible.
Equipment cleanness	Monthly or quarterly	Check whether the equipment is clean.	The equipment surface is clean.
Indicators	Monthly or quarterly	Check whether the indicators on the equipment are working properly.	For details about the indicator status, see pRRU Ports and Indicators in *LampSite Hardware Description*.

Power System Maintenance Items

Table 3-2 lists the power system maintenance items for the pRRU.

Copyright © Huawei Technologies Co., Ltd.

Table 3-2 Power system maintenance items

Item	Check Frequency	Operation	Reference Standard
Power cables	Monthly or quarterly	Check the power cable connections.	The power cables are securely connected and not deteriorating. The joints are not corroded.
Voltage	Monthly or quarterly	Use a multimeter to measure the voltage of the power supply.	The voltage is in the permissible range.

Copyright © Huawei Technologies Co., Ltd.

4 Powering On and Powering Off the RHUB

About This Chapter

After the RHUB is powered on, check the indicator status. Power off the RHUB in normal or emergency mode as required.

4.1 Powering On the RHUB
The RHUB is powered by AC input.

4.2 Powering Off the RHUB
An RHUB can be powered off in two ways: normal power-off and emergency power-off. You need to perform a normal power-off in scenarios such as an equipment swap or foreseeable regional blackout, and you need to perform an emergency power-off in emergencies such as a fire, smoke, or water damage in indoor scenarios.

Copyright © Huawei Technologies Co., Ltd.

4.1 Powering On the RHUB

The RHUB is powered by AC input.

Prerequisites

The power cable of the RHUB is not connected to power, that is, the power plug is removed.

Context

NOTICE

The RHUB must be powered on within 7 days after it is unpacked, and the period of its power-off state cannot exceed 7 days during maintenance.

Procedure

Step 1 Insert the power plug to power on the RHUB.

Step 2 Wait 3 to 5 minutes. Then check the status of the RUN indicator.

If the RUN Indicator Is...	It Indicates that...	Then...
Steady on	There is power input, but the board is faulty.	Disable the power supply, rectify the board fault, and then power on the RHUB again.
Steady off	There is no power input, or an alarm about the board is reported.	Disable the power supply and check the power input again. If the power input is normal, rectify the board fault, and then power on the RHUB again.
1s on and 1s off	The RHUB is running properly.	End the power-on check task.
0.125s on and 0.125s off	The board software is being loaded.	If the loading is not complete after 5 minutes, disable the power supply and check whether the data in the configuration file is correct. Rectify the fault and then power on the RHUB again.

----End

Copyright © Huawei Technologies Co., Ltd.

4.2 Powering Off the RHUB

An RHUB can be powered off in two ways: normal power-off and emergency power-off. You need to perform a normal power-off in scenarios such as an equipment swap or foreseeable regional blackout, and you need to perform an emergency power-off in emergencies such as a fire, smoke, or water damage in indoor scenarios.

Procedure

- Normal power-off

NOTICE

Powering off the RHUB interrupts services, and therefore perform associated operations before a power-off.

1. Remove the power plug to disconnect the RHUB with the external power input.
2. If the RHUB is equipped with an external power device, turn off the switch of the external power device.

- Emergency power-off
  1. Turn off the switch of the external power device.

----End

Copyright © Huawei Technologies Co., Ltd.

5 Powering On and Powering Off the pRRU

About This Chapter

After the pRRU is powered on, check the power supply voltage and indicator status. Power off the pRRU based on the power supply mode.

5.1 Powering On the pRRU
After the pRRU is powered on, check its running status by observing the indicator status.

5.2 Powering Off the pRRU
A pRRU can be powered off in two ways: normal power-off and emergency power-off. You need to perform a normal power-off in scenarios such as an equipment swap or foreseeable regional blackout, and you need to perform an emergency power-off in emergencies such as a fire, smoke, or water damage in indoor scenarios.

Copyright © Huawei Technologies Co., Ltd.

5.1 Powering On the pRRU

After the pRRU is powered on, check its running status by observing the indicator status.

Prerequisites

The pRRU and the cables are correctly installed.

Context

NOTICE

The pRRU must be powered on within 7 days after it is unpacked, and the period of its power-off state cannot exceed 7 days during maintenance.

Procedure

Step 1 Power on the pRRU.

The pRRU can be powered in either of the following modes, which cannot be used at the same time. It is recommended that you use power over Ethernet (PoE) power supply.

- The RHUB adopts the PoE power supply to provide power for the pRRU over the CPRI_E0 port.
- The pRRU can also be powered by the AC/DC adapter connecting to the local AC power module.

NOTICE

If PoE is used and AC/DC adapter is connected to the AC power module, the pRRU automatically uses AC/DC adapter to obtain power supply. Note that the pRRU will be powered off and then powered on again if you pull the plug of the AC/DC adapter power cable to use the PoE for power supply.

Step 2 **Optional:** Check the power supply status for the pRRU. This operation is required when AC/DC power adapter is used.

If...	Then...
The input voltage of the pRRU AC/DC adapter ranges from 100 V AC to 240 V AC	Go to **Step 3**. Otherwise, replace it. When the input voltage is within the permissible range, go to **Step 3**.

Step 3 Wait 3 to 5 minutes. Then Check the status of the RUN indicator.

Copyright © Huawei Technologies Co., Ltd.

If the RUN Indicator Is...	It Indicates that...	Then...
Steady on	There is power input, but the board is faulty.	Disable the power supply, rectify the board fault, and then power on the pRRU again.
Steady off	There is no power input.	Disable the power supply and check the power input again.
On for 1s and off for 1s	The pRRU is running properly.	End the power-on check task.
On for 0.125s and off for 0.125s	The board software is being loaded.	If the loading is not complete after 5 minutes, disable the power supply. Check whether the data in the configuration file is correct. Rectify the fault and then power on the pRRU again.

----End

5.2 Powering Off the pRRU

A pRRU can be powered off in two ways: normal power-off and emergency power-off. You need to perform a normal power-off in scenarios such as an equipment swap or foreseeable regional blackout, and you need to perform an emergency power-off in emergencies such as a fire, smoke, or water damage in indoor scenarios.

Procedure

- Normal power-off

NOTICE

Powering off the pRRU interrupts services, and therefore perform associated operations before a power-off.

  - If the pRRU is powered in PoE mode, remove the Ethernet cable.
  - If the pRRU is powered by an AC/DC adapter, disconnect the power cable of the AC/DC adapter.
- Emergency power-off
  1. Turn off the switch of the external power device.

----End

Copyright © Huawei Technologies Co., Ltd.

6 Replacing the RHUB

The RHUB is an indoor convergence unit. It converges multiple pRRUs to the BBU. Replacing the RHUB interrupts services carried on the serving cell.

Prerequisites

- A new RHUB is available.
- The labels and connections of the cables connected to the RHUB are recorded.
- The following tools are available: a Phillips screwdriver, an ESD wrist strap, and a rubber mallet.

Context

It takes about 10 minutes to replace the RHUB.

Procedure

- Replace the RHUB installed on a 19-inch rack, in a 19-inch cabinet or in a 19-Inch Shelf.

  NOTE

  The procedures for replacing the RHUB installed on a 19-inch rack are the same for replacing the RHUB installed in a 19-inch cabinet or in a 19-Inch Shelf. The following uses the RHUB installed on a 19-inch rack as an example.

  1. Power off the RHUB by referring to **4.2 Powering Off the RHUB**.
  2. Record the cable connections.
  3. Take insulation measures, and then remove all cables from the RHUB.
  4. Use a torque screwdriver or Phillips screwdriver to remove the four screws on the mounting ear of the RHUB, as shown in **Figure 6-1**.

Copyright © Huawei Technologies Co., Ltd.

Figure 6-1 Removing the mounting ear

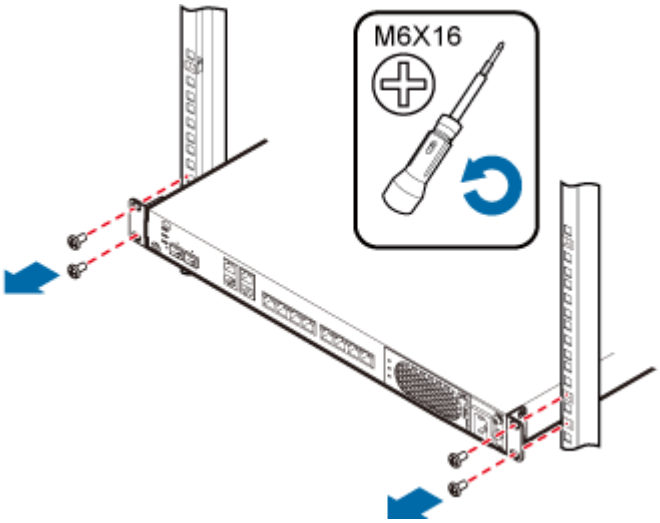

5. Remove the RHUB from the rack.
6. Install the new RHUB. For details, see *LampSite Installation Guide*.

NOTICE

Take proper ESD protection measures, such as wearing an ESD wrist strap or ESD gloves to prevent electrostatic damage to the boards, modules, or electronic components.

7. Connect all the cables to the new RHUB according to the recorded installations.
8. Power on the RHUB by referring to **4.1 Powering On the RHUB**.
9. Determine whether the new RHUB is working properly according to the indicator status on the RHUB. For details about the indicator status, see RHUB Ports and Indicators in *LampSite Hardware Description*.
10. Instruct the network operator to run the **RST BRD** command to reset the RHUB. No further action is required.

- Replace the RHUB installed on a wall.
  1. Power off the RHUB by referring to **4.2 Powering Off the RHUB**.
  2. Record the cable connections.
  3. Take insulation measures, and then remove all cables from the RHUB.
  4. Use a torque wrench or socket wrench to remove the four expansion bolts on the mounting ear, and then remove the RHUB, as shown in **Figure 6-2**.

Copyright © Huawei Technologies Co., Ltd.

Figure 6-2 Removing the mounting ear

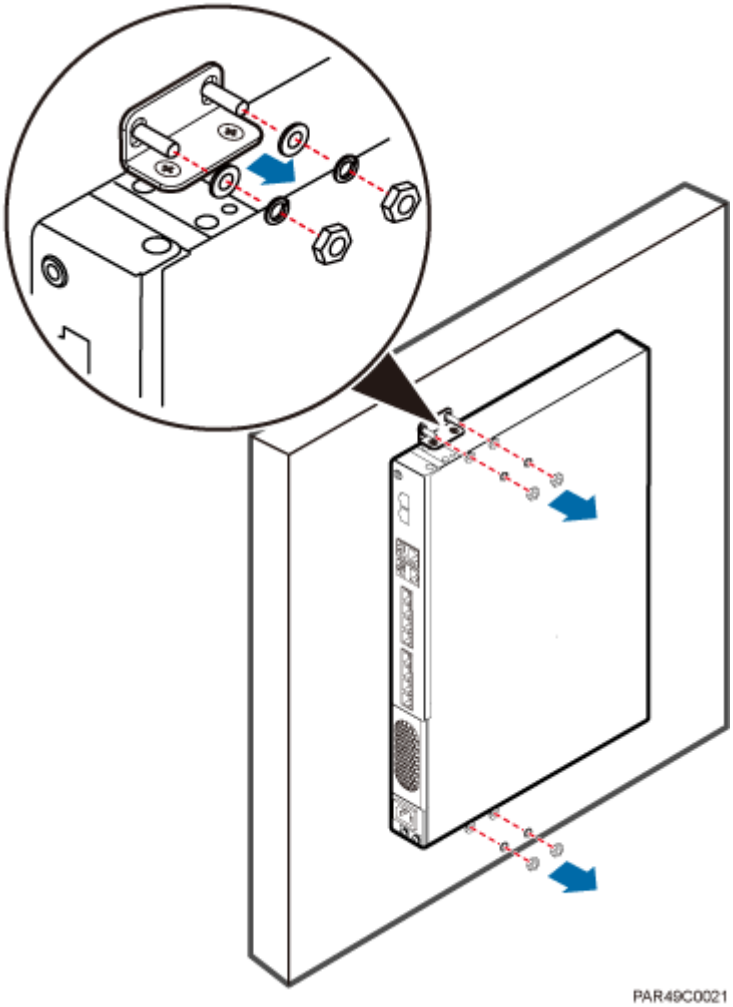

5. Install the new RHUB on a wall. For details, see *LampSite Installation Guide*.

NOTICE

Take proper ESD protection measures, such as wearing an ESD wrist strap or ESD gloves to prevent electrostatic damage to the boards, modules, or electronic components.

6. Connect all the cables to the new RHUB according to the recorded installations.
7. Power on the RHUB by referring to **4.1 Powering On the RHUB**.
8. Determine whether the new RHUB is working properly according to the indicator status on the RHUB. For details about the indicator status, see RHUB Ports and Indicators in *LampSite Hardware Description*.
9. Instruct the network operator to run the **RST BRD** command to reset the RHUB. No further action is required.

----End

Copyright © Huawei Technologies Co., Ltd.

Follow-up Procedure

- Place the replaced RHUB into an ESD box or bag. Then, place the ESD box or bag into a foam-padded carton or the packing box of the new optical module.
- Record the information about the faulty component in the fault card.
- Contact the local Huawei office to deal with the faulty component.

Copyright © Huawei Technologies Co., Ltd.

7 Replacing an Optical Module

An optical module provides a port for opto-electronic conversion. This enables the transmission between the RHUB and BBU through the optical fiber. Replacing the optical module requires removing the optical fibers. This interrupts all the services.

Prerequisites

- The number and type of faulty optical modules are confirmed, and new optical modules are available.
- The new optical modules to be installed must match CPRI rates.
- The position for installing an optical module and the cable connection are recorded.
- The following tools and materials are available: an ESD wrist strap or ESD gloves, and an ESD box or bag.

Context

- The optical modules are connected to the CPRI0 and CPRI1 ports on the RHUB panel.
- An optical module or CPRI fiber optic cable cannot be inserted into or removed from this CPRI port when the power supply is connected.
- Replacing an optical module involves removing an optical fiber and the faulty optical module, installing a new optical module, connecting the optical fiber to the optical module, and recovering the links. The operation takes about 10 minutes.

NOTICE

Take proper ESD protection measures, such as wearing an ESD wrist strap or ESD gloves to prevent electrostatic damage to the boards, modules, or electronic components.

Procedure

Step 1 Wear ESD gloves.

Step 2 Record the optical module and fiber connections.

Step 3 Power off the RHUB according to the instructions in **4.2 Powering Off the RHUB**.

Copyright © Huawei Technologies Co., Ltd.

CAUTION

After removing the optical fiber from the optical module, do not look directly at the optical modules without eye protection.

Step 4 Press the latch on the connector of the optical fiber connector, and remove the connector from the faulty optical module, use the dust-proof cap to protect the optical fiber, as shown in **Figure 7-1**.

Figure 7-1 Removing the optical fiber

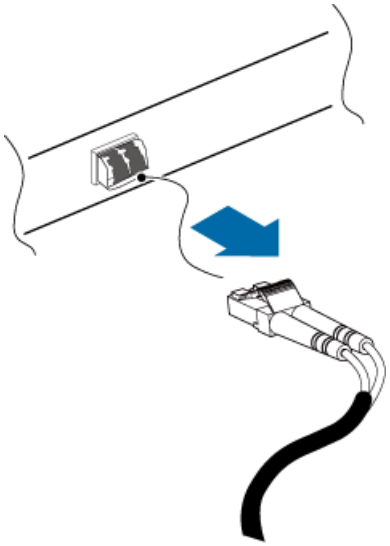

Step 5 Turn the ring-pull on the faulty optical module outwards. Hold the ring-pull and take the faulty optical module out of the slot to remove it from the CPRI0 or CPRI1 port.

Step 6 Connect a new optical module to the corresponding CPRI port, as shown in **Figure 7-2**.

Figure 7-2 Removing the optical module

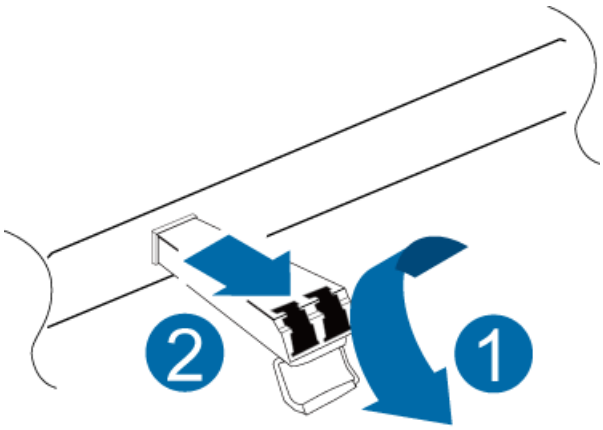

Step 7 Remove the dust-proof caps from the optical module and optical fiber, and connect the optical fiber connector to the new optical module.

Copyright © Huawei Technologies Co., Ltd.

Step 8 Power on the RRU according to the instructions in **4.1 Powering On the RHUB**.

Step 9 Check whether CPRI signal transmission recovers by observing the CPRI indicator on the RHUB panel.

If...	Then...
The CPRI indicator is green	CPRI signal transmission recovers and the optical fiber replacement is successful.
The CPRI indicator is red or in another color	CPRI signal transmission is abnormal. Check whether the optical fiber and optical module are securely installed.

Step 10 Take off the ESD gloves and pack up all the tools.

----End

Follow-up Procedure

- Place the replaced optical module into an ESD box or bag. Then, place the ESD box or bag into a foam-padded carton or the packing box of the new optical module.
- Record the information about the faulty component in the fault card.
- Contact the local Huawei office to deal with the faulty component.

Copyright © Huawei Technologies Co., Ltd.

8 Replacing the RF Daughter Board

This section describes the procedures for replacing the RF daughter board of the pRRU. A pRRU can have two transmission ports or three transmission ports, requiring the same installation operations. This section uses the pRRU with three transmission ports as an example. Replacing an RF daughter board interrupts all the services carried on the pRRU.

Prerequisites

The replacement takes approximately 5 minutes.

Context

The preferred slot for an RF daughter board depends on the mode of the RF daughter board.

Figure 8-1 shows the slot for installing the RF daughter boards.

Figure 8-1 Slot for installing the RF daughter boards

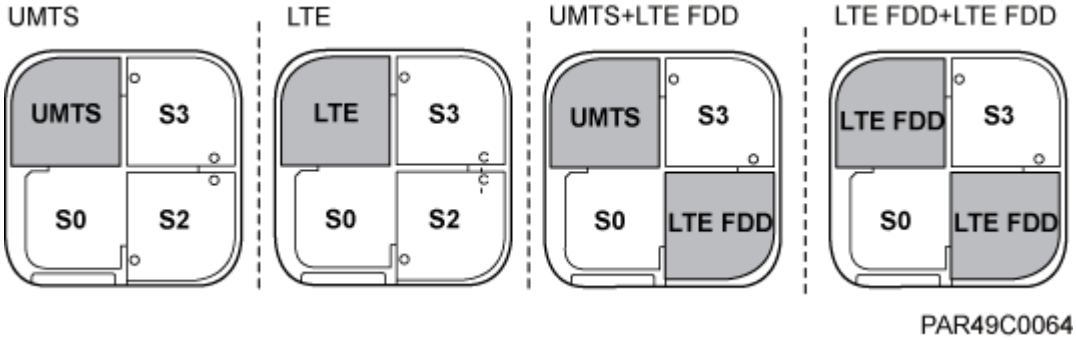

NOTE

- Unless otherwise specified, LTE mode in this document refers to LTE TDD and LTE FDD.
- The procedures for replacing an RF daughter board in different slots on the pRRU are the same. The following section uses the procedures for replacing an RF daughter board in slot S1 as an example.

Procedure

Step 1 Instruct the network operator to block the pRRU.

Copyright © Huawei Technologies Co., Ltd.

- On the UMTS side, log in to the LMT and run the **BLK BRD** command to block the RF daughter board.
- On the LTE side, log in to the LMT and run the **BLK BRD** command to block the RF daughter board.

CAUTION

A pRRU that has just been powered off has afterheat. Take scald-proof measures when removing the modules.

Step 2 Power off the pRRU by referring to **5.2 Powering Off the pRRU**.

Step 3 Wear ESD gloves.

NOTICE

Take proper ESD protection measures. For example, wear ESD gloves to prevent electrostatic damage to the boards, modules, or electronic components.

Step 4 Use the M4 Phillips screwdriver to loosen the Phillips screw on the pRRU housing. Wrench and remove the housing from the installation position of the Phillips screw hole, as shown in **Figure 8-2**.

Figure 8-2 Removing the pRRU housing

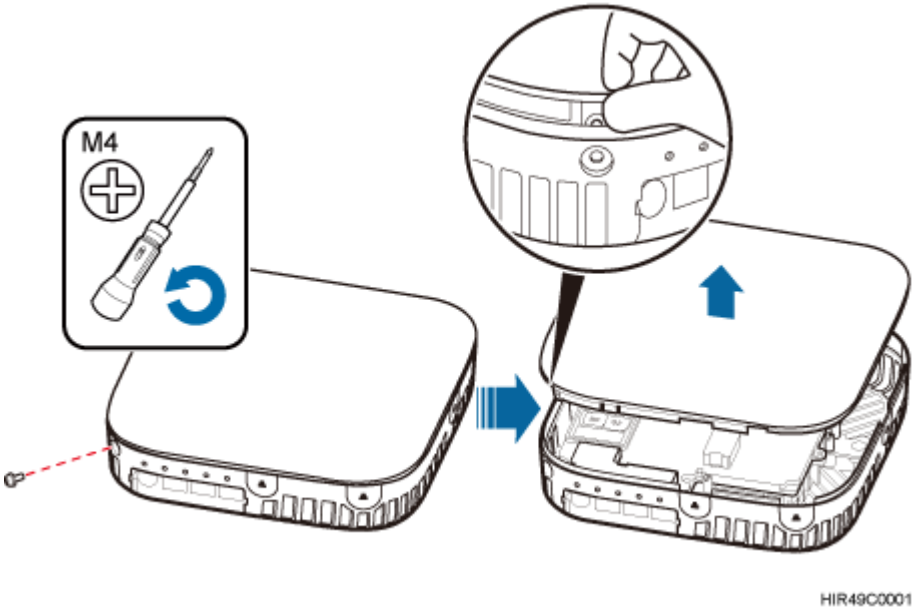

Copyright © Huawei Technologies Co., Ltd.

NOTE

- The pRRU housing and the RF daughter board can be secured using either Phillips screws or protection screws, requiring the same installation operations. This section uses Phillips screws as an example to describe the installation operations.
- Keep the Phillips screw secure for future use.

Step 5 Remove the RF daughter board installed in slot S1.

NOTICE

Hold the RF daughter board tightly when pulling the handle to prevent the RF daughter board from falling.

1. Use the M4 Phillips screwdriver to loosen the Phillips screws on the RF daughter board in slot S1, as shown in **Figure 8-3**.

Figure 8-3 Loosen the Phillips screws

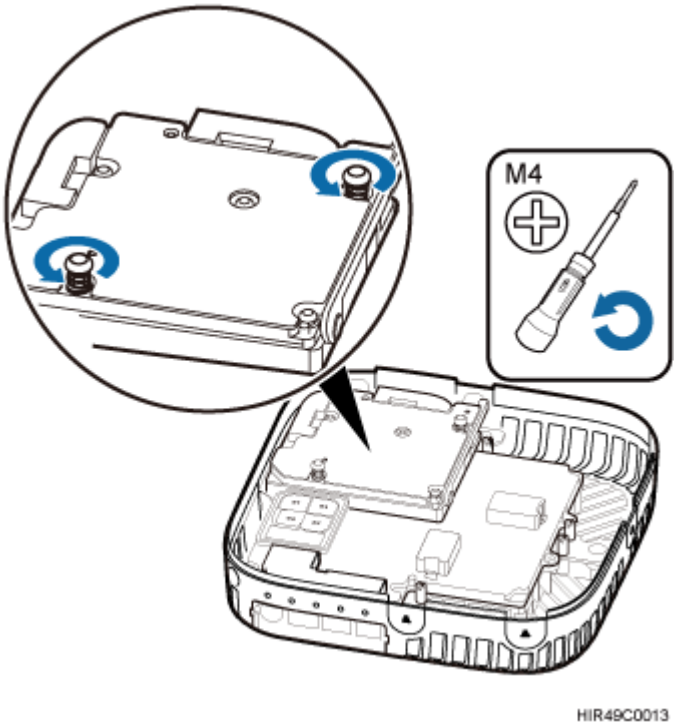

2. Use the left hand to hold the RF daughter board and the right hand to hold the right handle of the RF daughter board to remove the RF daughter board and put it into an ESD box or bag, as shown in **Figure 8-4**.

Copyright © Huawei Technologies Co., Ltd.

Figure 8-4 Removing the RF daughter board installed in slot S1

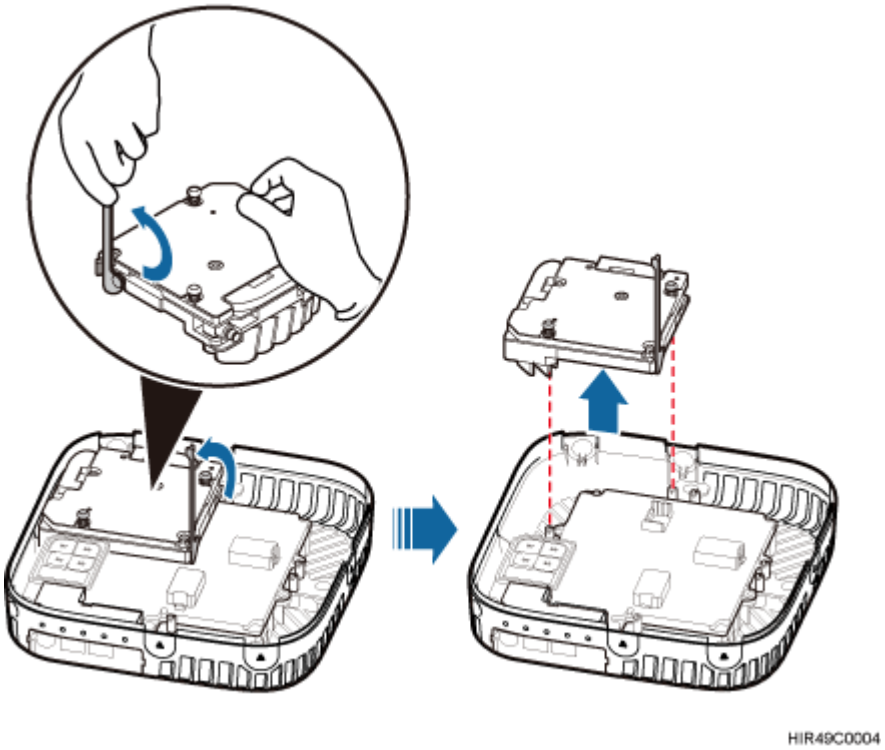

Step 6 Install a new RF daughter board in slot S1.

Level the handles of an RF daughter board of the required mode, and insert the handles separately in the two dowels of slot S1, and use the M4 Phillips screwdriver to tighten the Phillips screws on the RF daughter board with a torque of 1.4 N•m, as shown in **Figure 8-5**.

Figure 8-5 Installing the RF daughter board in slot S1

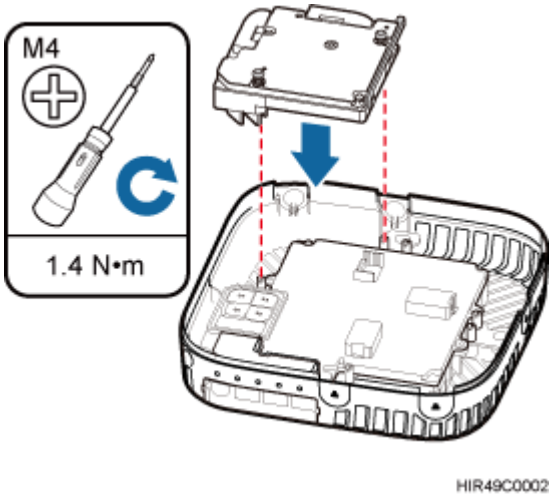

Step 7 Remove the SN label and mode label on the surface of the RF daughter board, as shown in **Figure 8-6**.

Copyright © Huawei Technologies Co., Ltd.

Figure 8-6 Removing the SN label and mode label

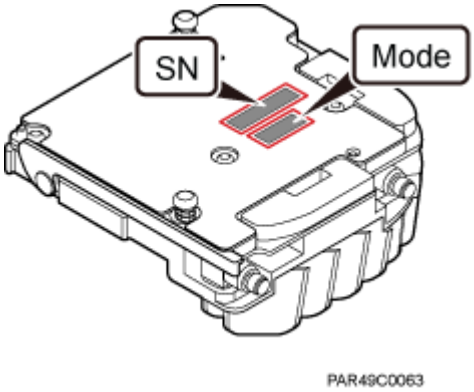

Step 8 Attach the removed SN label to the corresponding position for S1 label on the nameplate side of the pRRU housing, as shown in **Figure 8-7**.

NOTE

- If an SN label has been attached to the position for S1 label, remove this label first.
- The RF daughter board replacement described herein does not involve any mode change. Therefore, the removed mode label can be discarded

Figure 8-7 Attaching the SN label

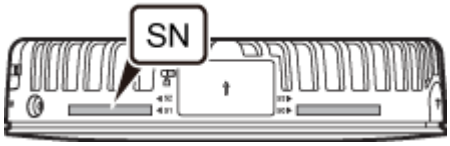

Step 9 Close the pRRU housing and tamp each side of the housing until a click is heard. Ensure that the groove gaps between the front and back housings are evenly distributed. Use the M4 Phillips screwdriver to tighten the Phillips screw on the housing with a torque of 1.4 N•m, as shown in **Figure 8-8**.

Figure 8-8 Installing the pRRU housing

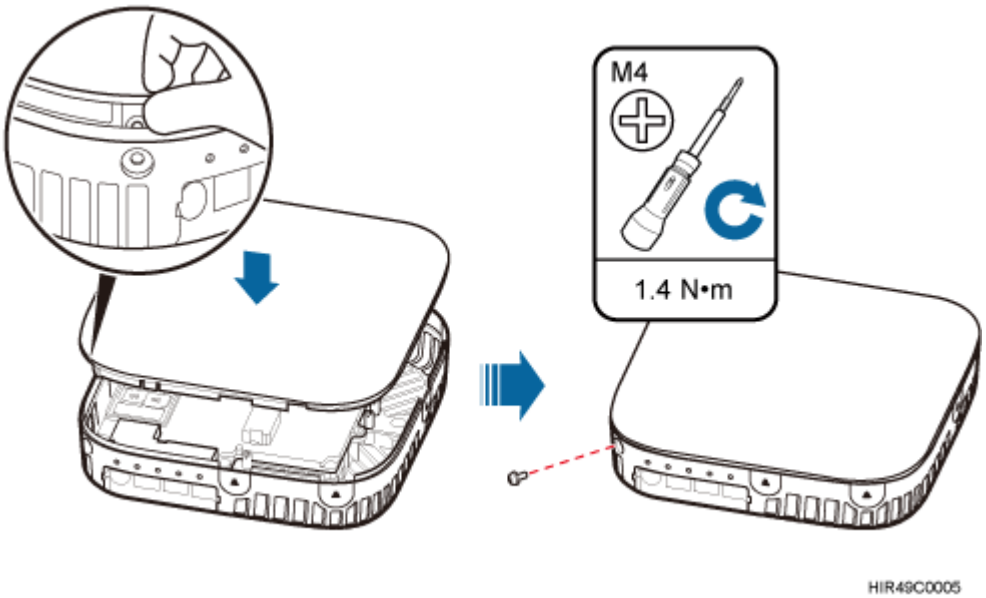

Copyright © Huawei Technologies Co., Ltd.

NOTE

The Phillips screw is the one removed and kept in **Step 4**.

Step 10 Power on the pRRU by referring to **5.1 Powering On the pRRU**.

Step 11 Instruct the network operator to unblock the pRRU.

- On the UMTS side, log in to the NodeB LMT and run the **UBL BRD** command to unblock the RF daughter board of the pRRU.
- On the LTE side, log in to the eNodeB LMT and run the **UBL BRD** command to unblock the RF daughter board of the pRRU.

Step 12 Take off the ESD gloves and pack up all the tools.

----End

Follow-up Procedure

- Place the replaced RF daughter board into an ESD box or bag. Then, place the ESD box or bag into a foam-padded carton or the packing box of the new optical module.
- Record the information about the faulty component in the fault card.
- Contact the local Huawei office to deal with the faulty component.

Copyright © Huawei Technologies Co., Ltd.

9 Replacing the Wi-Fi Daughter Board

This section describes the procedures for replacing the Wi-Fi daughter board, which applies only to a pRRU with three transmission ports.Replacing an Wi-Fi daughter board interrupts all the services carried on the pRRU.

Prerequisites

The replacement takes approximately 5 minutes.

Context

On a pRRU with three transmission ports, a Wi-Fi daughter board can be installed only in slot S3, as shown in **Figure 9-1**.

Figure 9-1 Slot for installing the Wi-Fi daughter board

Procedure

Step 1 Instruct the network operator to block the pRRU.

- On the UMTS side, log in to the LMT and run the **BLK BRD** command to block the RF daughter board.
- On the LTE side, log in to the LMT and run the **BLK BRD** command to block the RF daughter board.

Step 2 Ask the AC administrator to change on the AC the MAC address of the corresponding Wi-Fi daughter board.

Copyright © Huawei Technologies Co., Ltd.

CAUTION

A pRRU that has just been powered off has afterheat. Take scald-proof measures when removing the Wi-Fi daughter board.

Step 3 Power off the pRRU by referring to **5.2 Powering Off the pRRU**.

Step 4 Wear ESD gloves.

NOTICE

Take proper ESD protection measures. For example, wear ESD gloves to prevent electrostatic damage to the boards, modules, or electronic components.

Step 5 Use the M4 Phillips screwdriver to loosen the Phillips screw on the pRRU housing. Wrench and remove the housing from the installation position of the Phillips screw hole, as shown in **Figure 9-2**.

Figure 9-2 Removing the pRRU housing

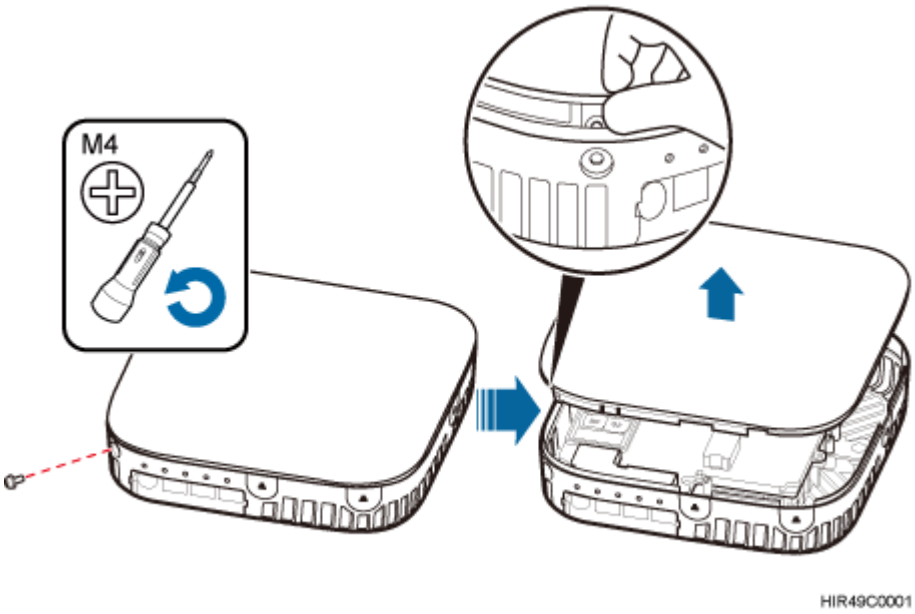

NOTE

- The pRRU housing and the Wi-Fi daughter board can be secured using Phillips screws or protection screws, requiring the same installation operations. This section uses Phillips screws as an example.
- Keep the protection screw secure for future use.

Step 6 Remove the Wi-Fi daughter board installed in slot S1.

Copyright © Huawei Technologies Co., Ltd.

NOTICE

Hold the Wi-Fi daughter board tightly when pulling the handle to prevent the Wi-Fi daughter board from falling.

1. Use the M4 Phillips screwdriver to loosen the Phillips screws on the Wi-Fi daughter board in slot S3, as shown in **Figure 9-3**.

   Figure 9-3 Loosen the four fastening screws

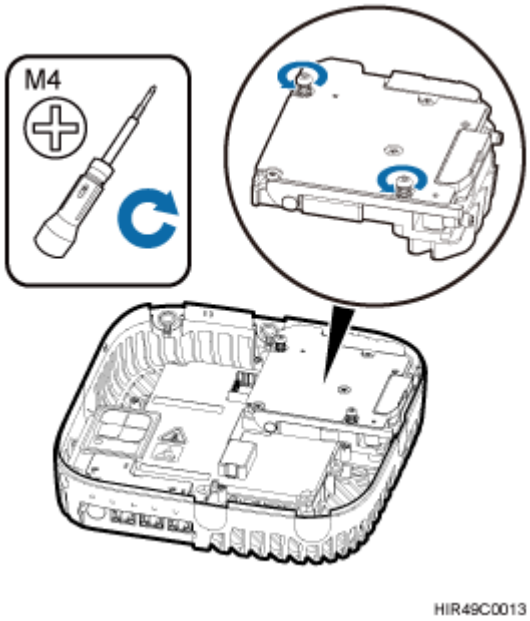

2. Use the left hand to hold the Wi-Fi daughter board and the right hand to hold the right handle of the Wi-Fi daughter board to remove the Wi-Fi daughter board and put it into an ESD box or bag, as shown in **Figure 9-4**.

Copyright © Huawei Technologies Co., Ltd.

Figure 9-4 Removing the Wi-Fi daughter board installed in slot S3

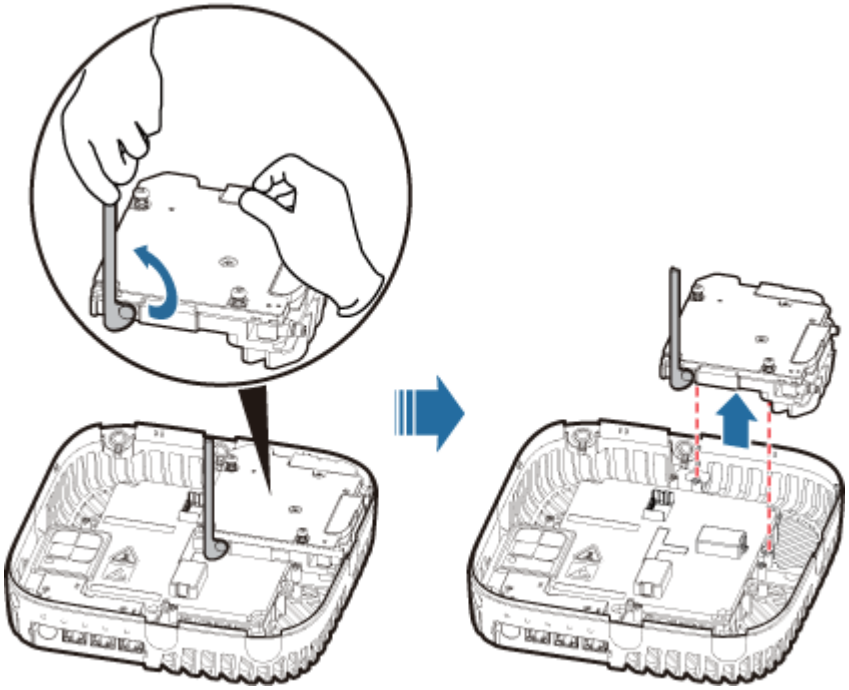

Step 7 Install a new Wi-Fi daughter board in slot S3.

Level the handles of a Wi-Fi daughter board of the required mode, and insert the handles separately in the two dowels of slot S3, and use the M4 Phillips screwdriver to tighten the Phillips screws on the Wi-Fi daughter board with a torque of 1.4 N•m, as shown in **Figure 9-5**.

Figure 9-5 Installing the Wi-Fi daughter board in slot S1

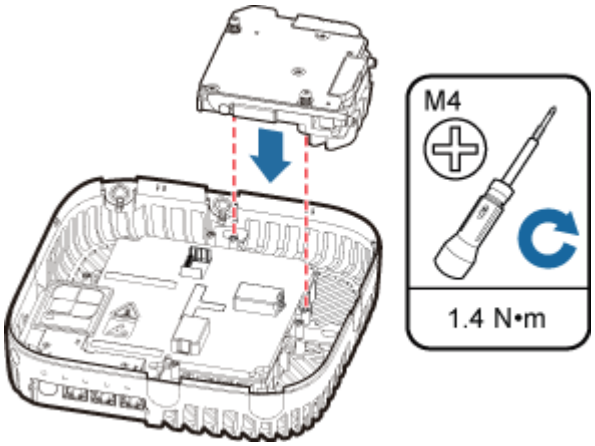

Step 8 Remove the SN label and WIFI MAC labels on the surface of the Wi-Fi daughter board, as shown in **Figure 9-6**. Keep the labels secure.

Copyright © Huawei Technologies Co., Ltd.

Figure 9-6 Removing the SN label and WIFI MAC labels

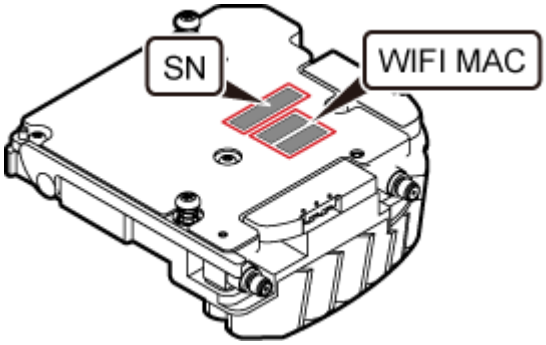

Step 9 Attach one WIFI MAC label to MAC Collection Template and report the WIFI MAC information to the commissioning personnel.

Step 10 Attach the removed SN label to the corresponding position for S3 label on the nameplate side of the pRRU housing and the other WIFI MAC label to a position (for the label of slot S3 on the side of the pRRU housing) between antenna ports ANT4 and ANT5, as shown in **Figure 9-7**.

NOTE

If an SN label has been attached to the position for S3 label, remove this label first.

Figure 9-7 Attaching the SN label and WIFI MAC label

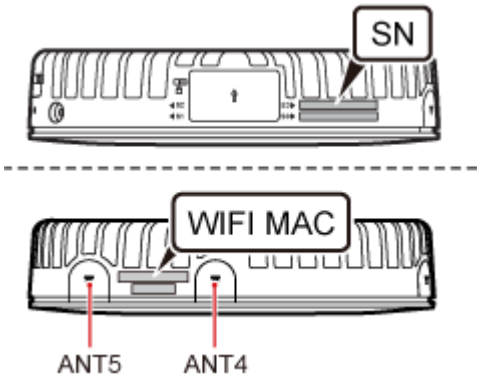

Step 11 Close the pRRU housing and tamp each side of the housing until a click is heard. Ensure that the groove gaps between the front and back housings are evenly distributed. Use the M4 Phillips screwdriver to tighten the Phillips screw on the housing with a torque of 1.4 N•m, as shown in **Figure 9-8**.

Copyright © Huawei Technologies Co., Ltd.

Figure 9-8 Installing the pRRU housing

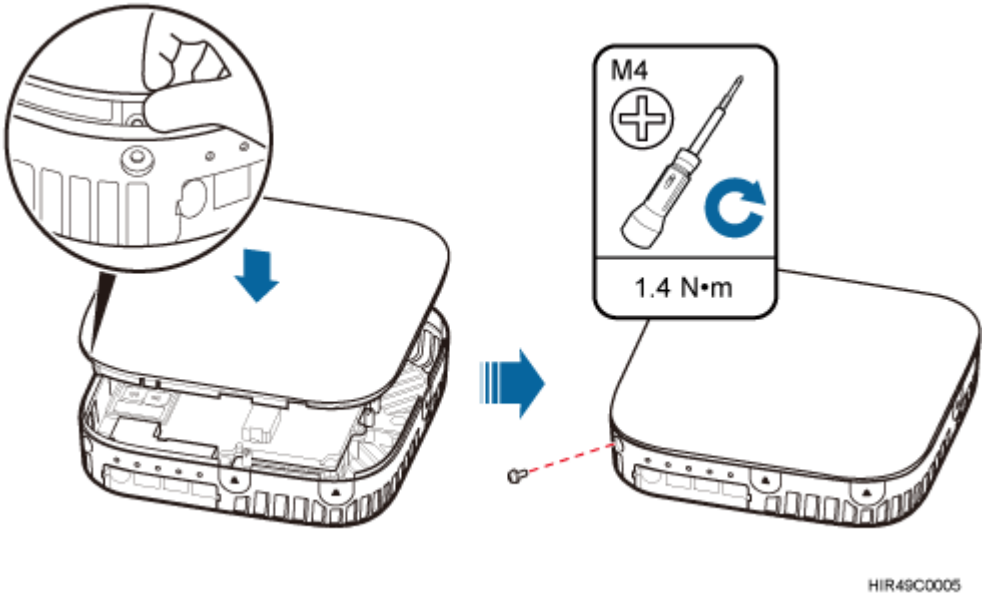

NOTE

The Phillips screw is the one removed and kept in **Step 5**.

Step 12 Power on the pRRU by referring to **5.1 Powering On the pRRU**.

Step 13 Instruct the network operator to unblock the pRRU.

- On the UMTS side, log in to the NodeB LMT and run the **UBL BRD** command to unblock the RF daughter board of the pRRU.
- On the LTE side, log in to the eNodeB LMT and run the **UBL BRD** command to unblock the RF daughter board of the pRRU.

Step 14 Take off the ESD gloves and pack up all the tools.

----End

Copyright © Huawei Technologies Co., Ltd.

10 Replacing the pDock Mother Board

This section describes the procedure for replacing the pDock mother board. Replacing the pDock mother board of a pRRU will interrupt all services carried on the pRRU. A pDock mother board can have two transmission ports or three transmission ports, requiring the same installation operations. This section uses the pDock mother board with three transmission ports as an example.

Prerequisites

The process takes approximately 20 minutes.

Procedure

Step 1 Instruct the network operator to block the pRRU.

- On the UMTS side, log in to the LMT and run the **BLK BRD** command to block the RF daughter board.
- On the LTE side, log in to the LMT and run the **BLK BRD** command to block the RF daughter board.

CAUTION

A pRRU that has just been powered off is till very hot on the surface. Take scald-proof measures when removing the modules.

Step 2 Power off the pRRU by referring to **5.2 Powering Off the pRRU**.

Step 3 Put on ESD gloves.

NOTICE

Take proper ESD protection measures, for example, wear ESD gloves, to prevent electrostatic damage to the boards, modules, or electronic components.

Copyright © Huawei Technologies Co., Ltd.

Step 4 Record connection positions of all pRRU cables, and then remove the cables.

Step 5 Removing the pRRU. Hold the pRRU case in one hand and pull the hoist clamp on the mounting bracket with the other hand, as shown in step a in **Figure 10-1**. Then, remove the mounting bracket from the pRRU, as shown in step b in **Figure 10-1**.

Figure 10-1 Removing the pRRU

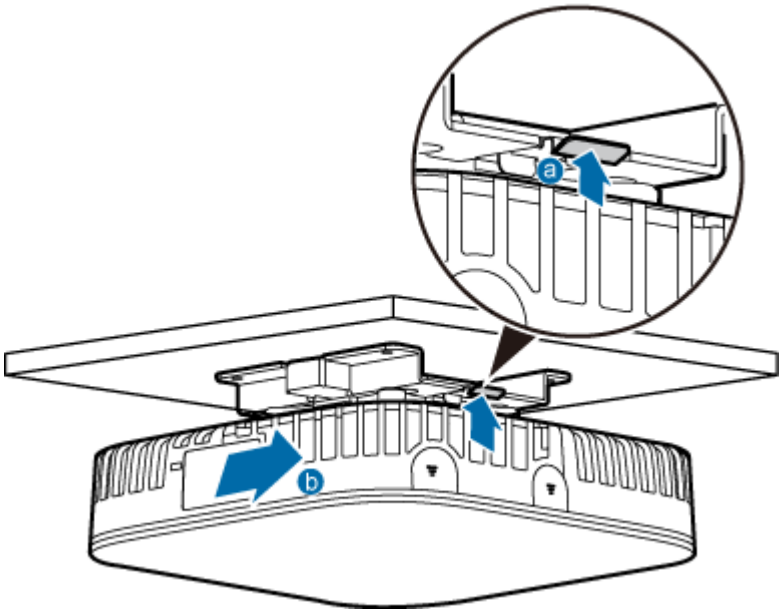

Step 6 **Optional:** Remove the rubber plug from the Ethernet port, as shown in **Figure 10-2**.

Figure 10-2 Removing the rubber plug from the Ethernet port

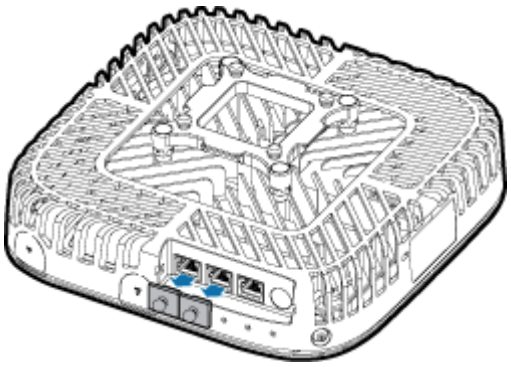

Step 7 Remove the four rubber plugs from holes of the installation support, as shown in **Figure 10-3**.

Copyright © Huawei Technologies Co., Ltd.

Figure 10-3 Removing rubber plugs from the installation support

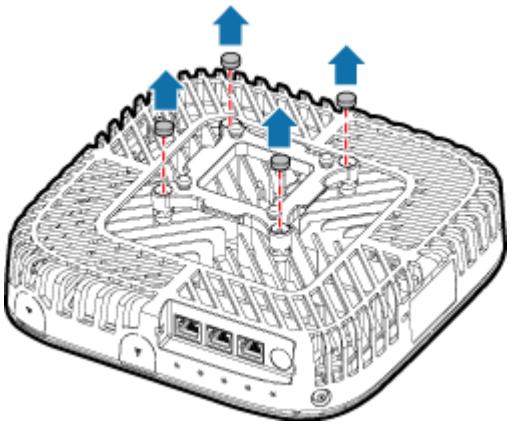

Step 8 Use an M4 Phillips screwdriver to loosen the Phillips screws for the installation support, and remove the support, as shown in **Figure 10-4**.

Figure 10-4 Removing the installation support

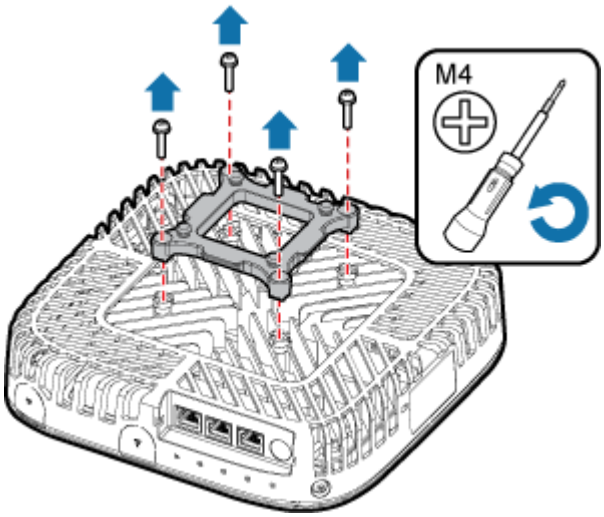

Step 9 Use an M4 Phillips screwdriver to loosen the Phillips screw on the pRRU housing, and remove the housing, as shown in **Figure 10-5**.

Copyright © Huawei Technologies Co., Ltd.

Figure 10-5 Removing the pRRU housing

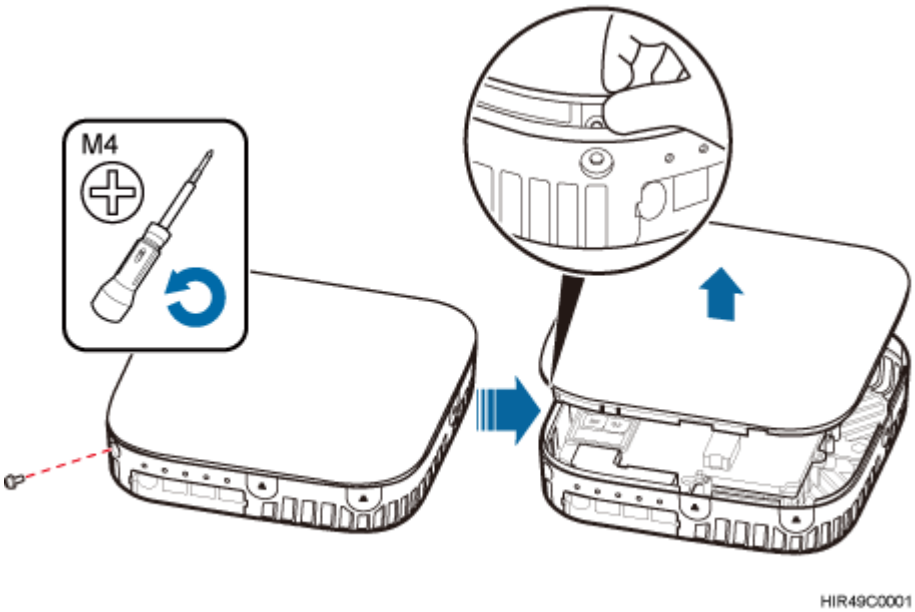

NOTE

- The pRRU housing and the RF daughter board can be secured using either Phillips screws or protection screws, requiring the same installation operations. This section uses Phillips screws as an example to describe the installation operations.
- Keep the Phillips screw secure for future use.

Step 10 Record positions of the RF daughter boards on the pRRU mother board, as shown in **Figure 10-6**. The following section assumes that the pRRU has two RF daughter boards.

Figure 10-6 Recording the installation positions of RF daughter boards

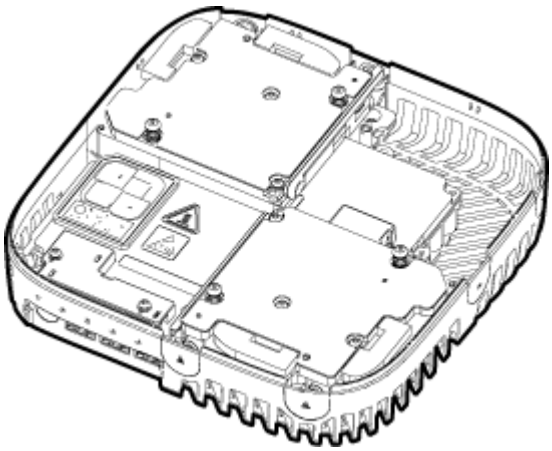

Step 11 Remove the RF daughter board in slot S1 and that in slot S2 in the same way.

NOTICE

Hold the RF daughter board tightly when pulling the handle to prevent the RF daughter board from falling.

Copyright © Huawei Technologies Co., Ltd.

1. Use an M4 Phillips screwdriver to loosen the Phillips screws on the RF daughter board, as shown in **Figure 10-7**.

Figure 10-7 Removing Phillips screws

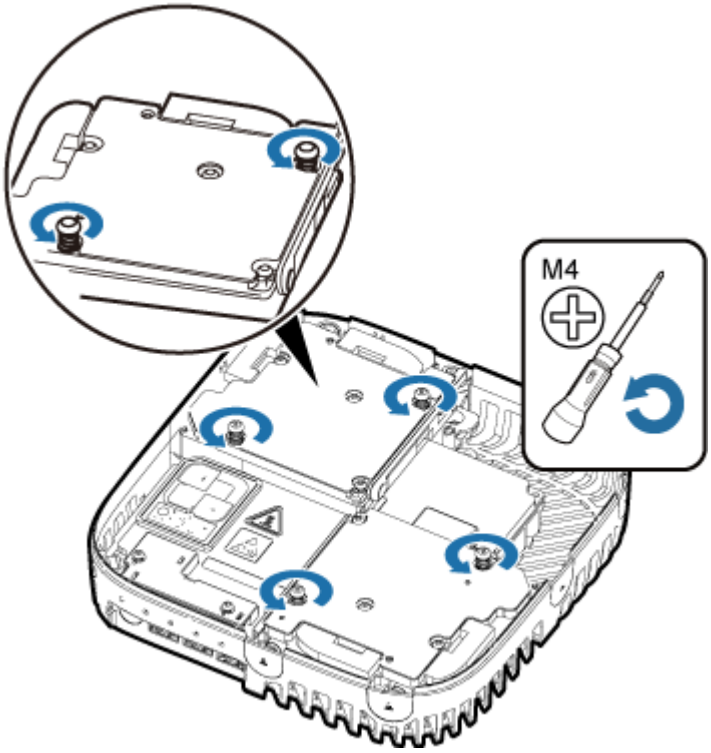

2. Hold the RF daughter board with one hand and pull its handle with another hand to remove the board, and place the board in an ESD bag, as shown in **Figure 10-8**.

Figure 10-8 Removing the RF daughter board in slot1 and slot2

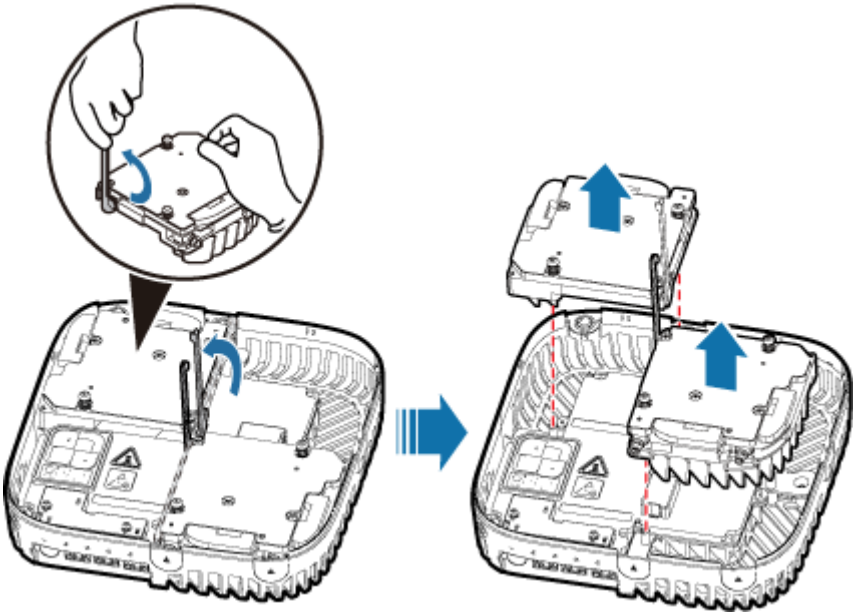

Copyright © Huawei Technologies Co., Ltd.

Step 12 Use an M3 Phillips screwdriver to loosen the two fastening screws of the light pipe, and remove the light pipe, as shown in **Figure 10-9**.

Figure 10-9 Removing the light pipe

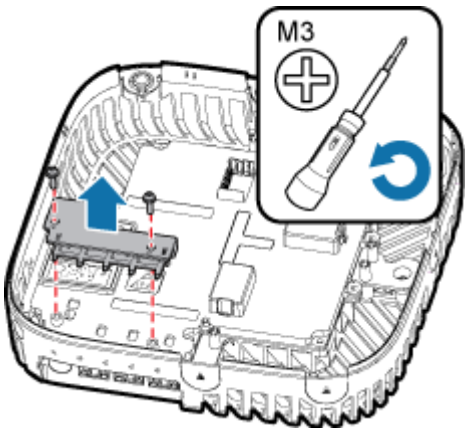

Step 13 Use the M3 Phillips screwdriver to loosen the four fastening screws of the pDock mother board, and remove the pDock mother board, as shown in **Figure 10-10**.

Figure 10-10 Removing the pDock mother board

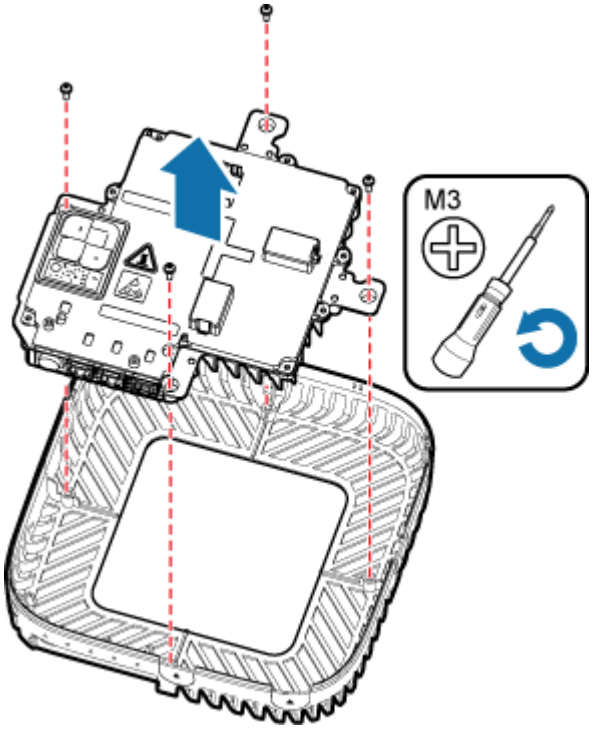

Step 14 Install a new pDock mother board, and use the M3 Phillips screwdriver to tighten the four fastening screws to 0.8 N•m, as shown in **Figure 10-11**.

Copyright © Huawei Technologies Co., Ltd.

Figure 10-11 Installing a new pDock mother board

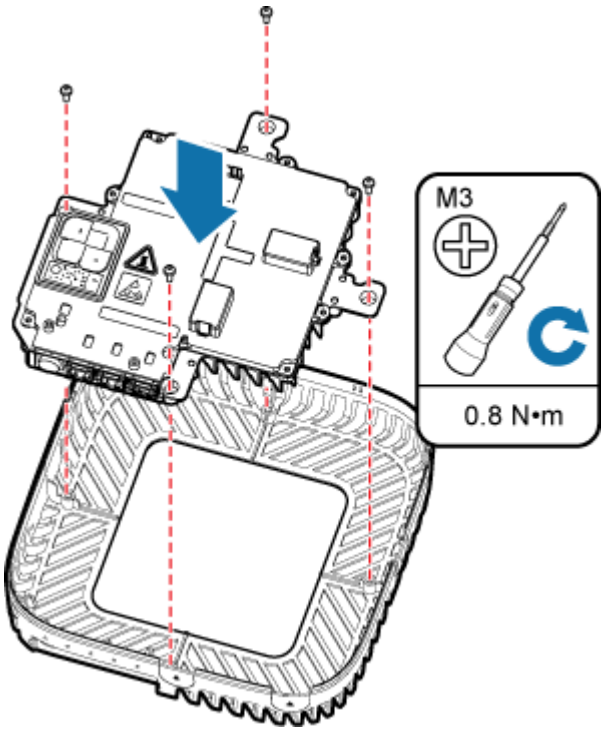

Step 15 Install the light pipe, and use the M3 Phillips screwdriver to tighten the two fastening screws to 0.8 N•m, as shown in **Figure 10-12**.

Figure 10-12 Installing the light pipe

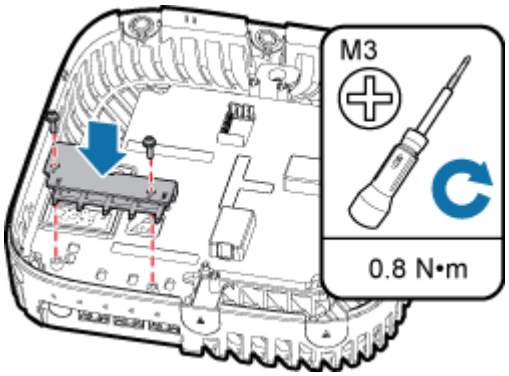

Step 16 Install the RF daughter boards in slots S1 and S2, and use the M4 Phillips screwdriver to tighten the two fastening screws always carried on each daughter board to 1.4 N•m, as shown in **Figure 10-13**.

Copyright © Huawei Technologies Co., Ltd.

Figure 10-13 Installing the RF daughter boards

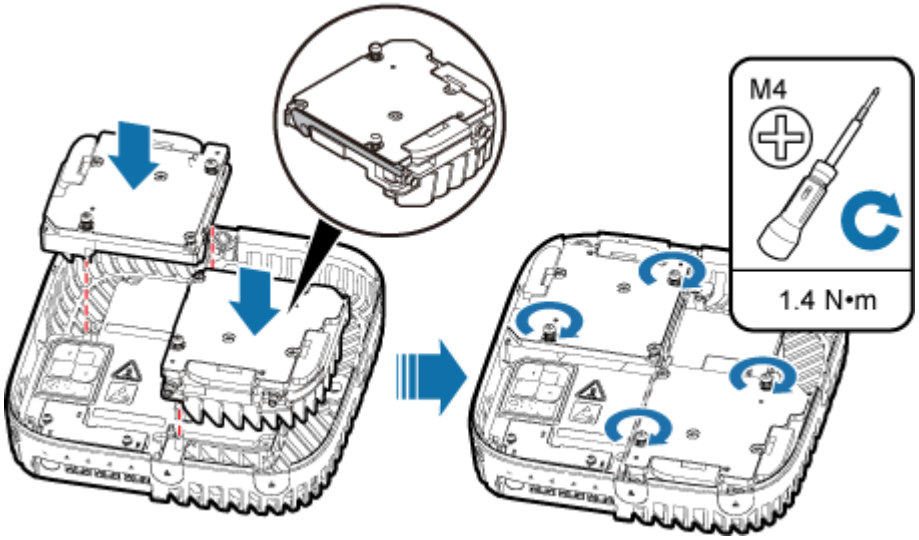

NOTICE

The installation positions of the RF daughter boards must be consistent before and after the replacement.

Step 17 Close the pRRU housing and tamp each side of the housing until a click is heard. Ensure that the groove gaps between the front and back housings are evenly distributed. Then, use the M4 Phillips screwdriver to tighten the Phillips screw on the housing to 1.4 N•m, as shown in **Figure 10-14**.

Figure 10-14 Installing the pRRU housing

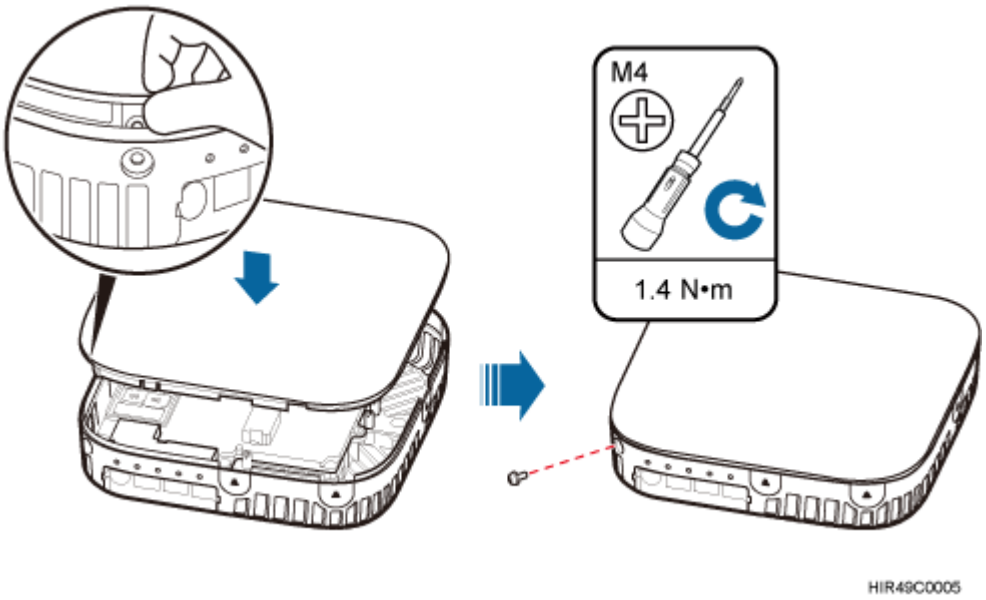

Copyright © Huawei Technologies Co., Ltd.

NOTE

The Phillips screw is the one removed and kept in **Step 9**.

Step 18 Assemble the installation support, and use the M4 Phillips screwdriver to tighten the four fastening screws to 2 N•m, as shown in **Figure 10-15**.

Figure 10-15 Assembling the installation support

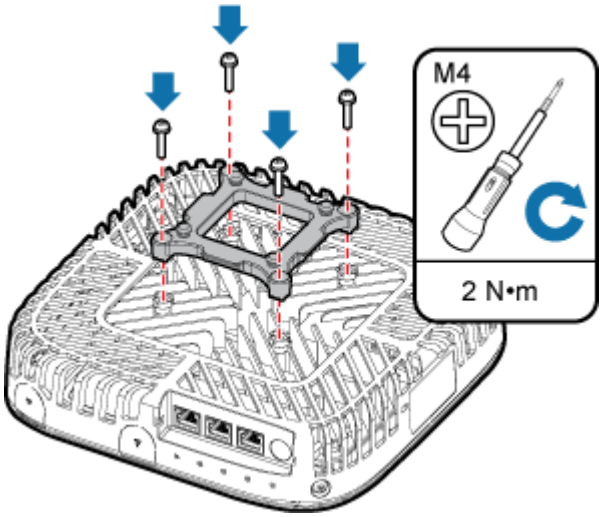

Step 19 Neatly insert four rubber plugs into the holes of the installation support, as shown in **Figure 10-16**.

Figure 10-16 Assembling the installation support

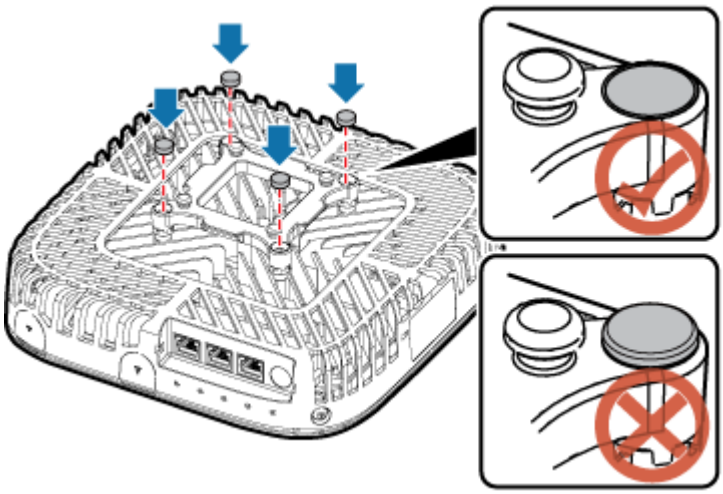

Step 20 Connect all the cables to the pRRU according to the recorded installations.

Step 21 **Optional:** Insert the rubber plug into the Ethernet port, as shown in **Figure 10-17**.

Copyright © Huawei Technologies Co., Ltd.

Figure 10-17 Assembling the installation support

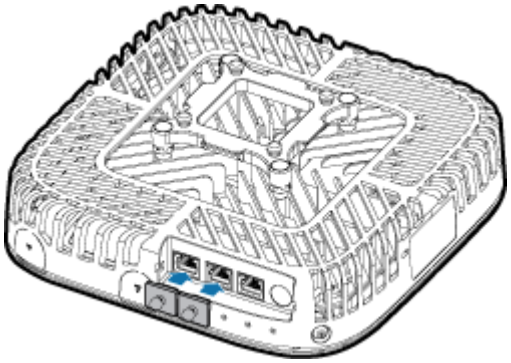

Step 22 Install the pRRU. The installation must be based on different scenarios. For details, see *LampSite Installation Guide*.

Step 23 Power on the pRRU by referring to **5.1 Powering On the pRRU**.

Step 24 Instruct the network operator to unblock the pRRU.

- On the UMTS side, log in to the NodeB LMT and run the **UBL BRD** command to unblock the RF daughter board.
- On the LTE side, log in to the eNodeB LMT and run the **UBL BRD** command to unblock the RF daughter board.

Step 25 Take off the ESD gloves and pack up all the tools.

----End

Follow-up Procedure

- Place the replaced pDock Mother Board into an ESD box or bag. Then, place the ESD box or bag into a foam-padded carton or the packing box of the new optical module.
- Record the information about the faulty component in the fault card.
- Contact the local Huawei office to deal with the faulty component.

Copyright © Huawei Technologies Co., Ltd.