DBS3900 LampSite

Installation Guide

Issue 08

Date 2016-05-30

HUAWEI TECHNOLOGIES CO., LTD.

Copyright © Huawei Technologies Co., Ltd. 2016. All rights reserved.

No part of this document may be reproduced or transmitted in any form or by any means without prior written consent of Huawei Technologies Co., Ltd.

Trademarks and Permissions

HUAWEI and other Huawei trademarks are trademarks of Huawei Technologies Co., Ltd.

All other trademarks and trade names mentioned in this document are the property of their respective holders.

Notice

The purchased products, services and features are stipulated by the contract made between Huawei and the customer. All or part of the products, services and features described in this document may not be within the purchase scope or the usage scope. Unless otherwise specified in the contract, all statements, information, and recommendations in this document are provided "AS IS" without warranties, guarantees or representations of any kind, either express or implied.

The information in this document is subject to change without notice. Every effort has been made in the preparation of this document to ensure accuracy of the contents, but all statements, information, and recommendations in this document do not constitute a warranty of any kind, express or implied.

Huawei Technologies Co., Ltd.

Address: Huawei Industrial Base
Bantian, Longgang
Shenzhen 518129
People's Republic of China

Website: http://www.huawei.com

Email: support@huawei.com

About This Document

Overview

This document describes how to install the modules and cables for the BBU, DCU3900, RHUB3908, pRRU3901, pRRU3902, pRRU3907, pRRU3911, and pRRU3911+WIFI. It also provides checklists for hardware installation.

NOTE

- Unless otherwise specified, BBU in this document refers to BBU3900 and BBU3910.
- DCU3900 in this document refers to DCU.
- RHUB3908 in this document refers to RHUB.
- Unless otherwise specified, pRRU in this document refers to pRRU3901, pRRU3902, pRRU3907, pRRU3911, and pRRU3911+WIFI.

Product Version

The following table lists the product version related to this document.

Product Name	Solution Version	Product Version
DBS3900 LampSite	• SRAN10.1 and later versions • RAN17.1 and later versions • eRAN8.1 and later versions • eRAN TDD 8.1 and later versions	V100R010C10 and later versions

Intended Audience

This document is intended for:

- BTS installation personnel

Copyright © Huawei Technologies Co., Ltd.

Contents

About This Document ii

1 Changes in DBS3900 LampSite Installation Guide 1

2 Installation Preparations 5

2.1 Reference Documents 5

2.2 Preparing Tools and Instruments 5

2.3 Requirements for Installation Personnel 7

3 Unpacking and Checking 8

4 Installing a BBU 10

5 Installing a DCU 11

6 Installing an RHUB 12

6.1 Information About the Installation 12

6.1.1 Installation Scenarios 13

6.1.2 Installation Clearance Requirements 18

6.1.3 Installation Environment 21

6.2 Installation Process 23

6.3 Installing an RHUB 24

6.3.1 Installing an RHUB in a 19-Inch Cabinet or Rack 24

6.3.2 Installing an RHUB in a 19-Inch Shelf 27

6.3.3 Installing an RHUB on a Wall 30

6.4 Installing RHUB Cables 34

6.4.1 Requirements for Cable Layout 34

6.4.2 Cable List 37

6.4.3 Cable Connections 43

6.4.4 Cable Installation Process 44

6.4.5 Installing PGND Cable 45

6.4.6 Installing Ethernet Cable 47

6.4.7 Installing CRPI Optical Cables 50

6.4.8 Installing Alarm Cable (Optional) 53

6.4.9 Installing Power Cable 53

6.5 Checking the RHUB Hardware Installation 55

Copyright © Huawei Technologies Co., Ltd.

6.6 Power-on Check on an RHUB 56

7 Installing a pRRU3901 59

7.1 Information About the Installation 60
7.1.1 Product Family 60
7.1.2 Installation Scenario 60
7.1.3 Space Requirements 64
7.1.4 Installation Environment Requirements 65
7.2 Obtaining the MAC Address (Optional) 66
7.3 Installation Process 67
7.4 Installing a pRRU3901 68
7.4.1 pRRU3901 Mounting Kits 69
7.4.2 Installing a pRRU3901 on a Wall 70
7.4.3 Installing a pRRU3901 on a Ceiling 74
7.4.4 Installing a pRRU3901 on a Pole 77
7.4.5 Installing a pRRU3901 on a Plate 80
7.4.6 Installing a pRRU3901 on a Keel 83
7.4.7 Installing the Cabinet 86
7.5 Installing pRRU3901 Cables 93
7.5.1 Requirements for Cable Layout 93
7.5.2 pRRU3901 Cable List 94
7.5.3 Cable Connections (Indoor) 95
7.5.4 Cable Connections (Outdoor) 98
7.5.5 Cable Connections (LTE TDD) 99
7.5.6 pRRU3901 cable installation process 101
7.5.7 Installing an Ethernet Cable 101
7.5.8 Installing an RF jumpers (Optional) 104
7.6 Checking the pRRU3901 Hardware Installation 106
7.7 Powering on the pRRU3901 107

8 Installing a pRRU3902 or pRRU3911 or pRRU3911+WIFI 109

8.1 Information About the Installation 110
8.1.1 Product Family 110
8.1.2 Installation Scenario 112
8.1.3 Space Requirements 116
8.1.4 Installation Environment Requirements 117
8.2 Installation Process 118
8.3 Installing a pRRU 119
8.3.1 Mounting Kits 119
8.3.2 Installing a pRRU on a Wall 120
8.3.3 Installing a pRRU on a Ceiling 124
8.3.4 Installing a pRRU on a Pole 127
8.3.5 Installing a pRRU on a Plate 129

Copyright © Huawei Technologies Co., Ltd.

8.3.6 Installing a pRRUon a Keel 136
8.3.7 Installing a pRRU on Steel Hangers 140
8.3.8 Installing the Cabinet 144
8.4 Installing pRRU Cables 148
8.4.1 Requirements for Cable Layout 148
8.4.2 Cable List 149
8.4.3 Cable Connections 150
8.4.4 Cable Installation Process 154
8.4.5 Installing a pRRU3902 Ethernet Cable 154
8.4.6 Installing a pRRU3911/pRRU3911+WIFI Ethernet Cable 159
8.4.7 Installing a pRRU3902 RF Jumper (Optional) 163
8.4.8 Installing a pRRU3911 RF Jumper (Optional) 165
8.5 (Optional) Installing a Combiner 167
8.6 Checking the pRRU Hardware Installation 169
8.7 Powering on the pRRU 170

9 Installing a pRRU3907 or pRRU3916 172

9.1 Information About the Installation 172
9.1.1 pRRU Product Family 173
9.1.2 Constraints and Limitations 173
9.1.3 Installation Clearance and Space Requirements 176
9.1.4 Installation Environment Requirements 179
9.2 Installation Process 180
9.3 Installing a pRRU 180
9.3.1 pRRU Mounting Kits 180
9.3.2 Installing a pRRU on a Wall 182
9.3.3 Installing a pRRU on a Pole 185
9.4 Installing pRRU Cables 187
9.4.1 Cabling Requirements 187
9.4.2 pRRU Cable List 189
9.4.3 pRRU3907 Cable Connections 190
9.4.4 pRRU3916 Cable Connections 190
9.4.5 pRRU cable installation process 191
9.4.6 Installing a PGND Cable 192
9.4.7 Installing a pRRU3907 RF Jumper 193
9.4.8 Installing a pRRU3916 RF Jumper 197
9.4.9 Opening the Cover Plate of a pRRU Cabling Cavity 199
9.4.10 Installing an Ethernet Cable 200
9.4.11 Closing the Cover Plate of a pRRU Cabling Cavity 202
9.5 Checking the pRRU Hardware Installation 204
9.6 Powering on the pRRU 205

10 (Optional) Installing the Extender-PoE90 207

Copyright © Huawei Technologies Co., Ltd.

11 (Optional) Installing the EXD3902 and Cables 211
11.1 Installation Scenario 212
11.2 Installation Clearance and Space Requirements 215
11.3 Installation Process 218
11.4 Installing an EXD3902 218
11.4.1 EXD3902 Mounting Kits 218
11.4.2 Installing an EXD3902 on a Wall 220
11.4.3 Installing an EXD3902 on a Pole 223
11.5 Installing EXD3902 Cables 225
11.5.1 Cabling Requirements 225
11.5.2 EXD3902 Cable Connections 226
11.5.3 Installling a PGND cable 227
11.5.4 Opening the Cover Plate of an EXD3902 Cabling Cavity 229
11.5.5 Installing an Ethernet Cable 230
11.5.6 Closing the Cover Plate of an EXD3902 Cabling Cavity 231
11.6 Checking the EXD3902 Hardware Installation 232
11.7 Powering on the EXD3902 233
12 (Optional) Installing the PoE Surge Protector and Cables 235
13 (Optional) Installing the RF Surge Protector and Cables 237
14 (Optional) Installing the Cabinet and Cabinet Cables 239
14.1 Installation Clearance Requirements 239
14.2 Mounting Bracket and Attachment Plate 240
14.2.1 Mounting Bracket 240
14.2.2 Attachment Plate 242
14.3 Installing a Cabinet 242
14.3.1 Installing the Cabinet on a Wall 242
14.3.2 Installing the Cabinet on a Pole 247
14.3.3 Installing the Cabinet on U-steel 250
14.3.4 Installing the Cabinet on Angle Steel 254
14.3.5 Installing the Cabinet on Metal Grid 257
14.3.6 Installing the Cabinet on the Floor 262
14.4 Installing Cabinet Cables 266
14.4.1 Cable Connections 266
14.4.2 Installing a PGND Cable for the Cabinet 269
15 Appendix 271
15.1 MAC Collection Template 271
15.2 Assembling a Shielded RJ45 Connector and an Ethernet Cable 272
15.3 DBS3900 LampSite Engineering Label 276
15.4 Attaching an L-Shaped Label 278
15.5 Attaching a Sign Plate Label 280

Copyright © Huawei Technologies Co., Ltd.

1 Changes in DBS3900 LampSite Installation Guide

This chapter describes the changes in the *DBS3900 LampSite Installation Guide*.

08 (2016-05-30)

This is the eighth commercial release.

Compared with 07 (2015-12-30), this issue incorporates the following new topics:

- 8.3.4 Installing a pRRU on a Pole
- 10 (Optional) Installing the Extender-PoE90
- 11 (Optional) Installing the EXD3902 and Cables

Compared with 07 (2015-12-30), this issue incorporates the following changes:

Content	Change Description
8.4.5 Installing a pRRU3902 Ethernet Cable	Renamed the outdoor Extender to Extender-PoE90.
8.4.6 Installing a pRRU3911/pRRU3911+WIFI Ethernet Cable	

Compared with 07 (2015-12-30), no information is deleted.

07 (2015-12-30)

This is the seventh commercial release.

Compared with 06 (2015-10-30), this issue incorporates the following new topics:

- 8.4.6 Installing a pRRU3911/pRRU3911+WIFI Ethernet Cable
- 12 (Optional) Installing the PoE Surge Protector and Cables
- 13 (Optional) Installing the RF Surge Protector and Cables
- 14 (Optional) Installing the Cabinet and Cabinet Cables

Compared with 06 (2015-10-30), this issue incorporates the following changes:

Copyright © Huawei Technologies Co., Ltd.

Content	Change Description
Entire document	Added the information about pRRU3911 and the cabinet used in the outside scenario.

Compared with 06 (2015-10-30), no information is deleted.

06 (2015-10-30)

This is the sixth commercial release.

Compared with 05 (2015-08-30), this issue includes the following new topics:

- 9 Installing a pRRU3907 or pRRU3916

Compared with 05 (2015-08-30), no information is changed.

Compared with 05 (2015-08-30), no information is deleted.

05 (2015-08-30)

This is the fifth commercial release.

Compared with 04 (2015-07-30), no information is added.

Compared with 04 (2015-07-30), this issue incorporates the following changes

Content	Change Description
6.4.7 Installing CRPI Optical Cables	Added the descriptions about the CPRI optical fiber connection in sharing BBUs with Macro Networks scenario.

Compared with 04 (2015-07-30), no information is deleted.

04 (2015-07-30)

This is the fourth commercial release.

Compared with 03 (2015-06-30), no information is added.

Compared with 03 (2015-06-30), this issue incorporates the following changes.

Content	Change Description
Entire document	Added the RHUB that has no electrical transmission port.

Compared with 03 (2015-06-30), no information is deleted.

Copyright © Huawei Technologies Co., Ltd.

03 (2015-06-30)

This is the third commercial release.

Compared with 02 (2015-05-08), this issue includes the following new topics:

- 5 Installing a DCU

Compared with 02 (2015-05-08), this issue incorporates the following changes:

Content	Change Description
Entire document	Added the descriptions about the DCU.

Compared with 02 (2015-05-08), no information is deleted.

02 (2015-05-08)

This is the second commercial release.

Compared with 01 (2015-03-23), no information is added.

Compared with 01 (2015-03-23), this issue incorporates the following changes:

Content	Change Description
6.4.9 Installing Power Cable	Modified the RHUB configurations of upper-level circuit breakers.
8.1.2 Installation Scenario	Deleted the minimum space requirements of the pRRU3901.
8.1.3 Space Requirements	Deleted the minimum space requirements of the pRRU3902.
8.3.2 Installing a pRRU on a Wall	Added the step about locking the protection screw of pRRU3902.
8.3.3 Installing a pRRU on a Ceiling	
8.3.5 Installing a pRRU on a Plate	
8.3.6 Installing a pRRUon a Keel	

Compared with 01 (2015-03-23), no information is deleted.

01 (2015-03-23)

This is the first commercial release.

Compared with draft B (2015-02-10), this issue includes the following new topics:

- 8 Installing a pRRU3902 or pRRU3911

Compared with draft B (2015-02-10), this issue incorporates the following changes:

Content	Change Description

Copyright © Huawei Technologies Co., Ltd.

Content	Change Description
Entire document	Added the descriptions about the pRRU3902.

Compared with draft B (2015-02-10), no information is deleted.

Draft B (2015-02-10)

This is a draft release.

Compared with draft A (2015-01-15), no information is added.

Compared with draft A (2015-01-15), this issue incorporates the following change:

Content	Change Description
6.1.1 Installation Scenarios	Added the descriptions about the RHUB panel must not face upwards.

Compared with draft A (2015-01-15), no information is deleted.

Draft A (2015-01-15)

This is a draft release.

Compared with Issue 08 (2014-12-30) of V100R009C00, no information is added.

Compared with Issue 08 (2014-12-30) of V100R009C00, this issue incorporates the following change:

Content	Change Description
Entire document	The base station in the LampSite solution is renamed DBS3900 LampSite.

Compared with Issue 08 (2014-12-30) of V100R009C00, no information is deleted.

Copyright © Huawei Technologies Co., Ltd.

2 Installation Preparations

About This Chapter

Before starting the installation, you must obtain the required reference documents, tools, and instruments, and familiarize yourself with the skills required.

2.1 Reference Documents

Before the installation, you must read the following documents:

2.2 Preparing Tools and Instruments

This section describes the tools and instruments that must be prepared before the installation.

2.3 Requirements for Installation Personnel

This section describes requirements for installation engineers. They must be qualified and trained, and familiar with correct operation methods and safety precautions before performing any operations.

2.1 Reference Documents

Before the installation, you must read the following documents:

- *DBS3900 LampSite Hardware Description*
- *Installation Reference*

2.2 Preparing Tools and Instruments

This section describes the tools and instruments that must be prepared before the installation.

Marker 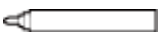 Level	Torque screwdriver (M4 to M6)	Diagonal pliers
Power cable crimping tool	RJ11 crimping tool	Cable cutter

Copyright © Huawei Technologies Co., Ltd.

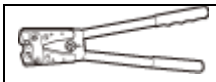	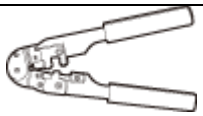	
Rubber mallet	Crown saw (Ø60)	Wire stripper 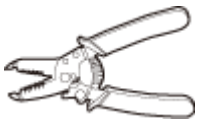
Hammer drill (Ø6, Ø8 and Ø12) 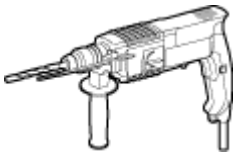	Torque wrench (Ø10 mm)	Protective gloves
Guarded blade utility knife	ESD gloves 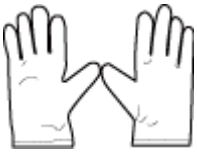	Long measuring tape
Multimeter	Network cable tester	Vacuum cleaner
Ladder	Torque wrench for SMA connector	Socket wrench (M6) 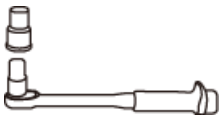

Hole screwdriver (T20)	–	-

Copyright © Huawei Technologies Co., Ltd.

2.3 Requirements for Installation Personnel

This section describes requirements for installation engineers. They must be qualified and trained, and familiar with correct operation methods and safety precautions before performing any operations.

Before the installation, pay attention to the following items:

- Technical engineers must take Huawei training and be familiar with proper installation and operation methods.
- The number of installation personnel depends on the engineering schedule and installation environment. Generally, three to five persons are required. Generally, only three to five onsite personnel are necessary.

Copyright © Huawei Technologies Co., Ltd.

3 Unpacking and Checking

This section describes how to unpack and check the delivered equipment to ensure that the materials are complete and intact.

Context

NOTE

The following lists important notes when you are transporting, lifting, or installing the equipment or components:

- Protect them from colliding with doors, walls, shelves, or other objects.
- Wear clean gloves and do not touch them with bare hands, sweat-soaked gloves, or dirty gloves.

NOTICE

You must power on the RHUB or pRRU within 7 days after it is unpacked.

Procedure

Step 1 Count the total number of the shipments.

If...	Then...
The total number of the components is consistent with that recorded in the packing lists on all packing boxes	Go to Step 2.
The total number of the components is inconsistent with that recorded in the packing lists on all packing boxes	Report the problems and causes to the local Huawei office.

Step 2 Check the exterior of each packing box.

If...	Then...
The exterior of each packing box is intact	Go to Step 3.

Copyright © Huawei Technologies Co., Ltd.

If...	Then...
It is damaged or soaked	Report the problems and causes to the local Huawei office.
The collision label is red	Do not unpack the packing box and claim for compensation from the transportation company.

Step 3 Check the type and quantity of the equipment in the boxes according to the packing list.

If...	Then...
The type and number are consistent with the packing list on each packing list	Sign the *Packing List* with the operator.
There is any shortage, wrong delivery, or damaged equipment	Report the problems and causes to the local Huawei office.

NOTICE

Perform the following operations to protect the components from any damages and help find out the cause of any damage in future: 1. Store the unpacked equipment and packing materials indoors. 2. Take photos of the storeroom, rusted or eroded equipment, packing box, and packing materials. 3. File the photos.

----End

Copyright © Huawei Technologies Co., Ltd.

4 Installing a BBU

This chapter describes the process of installing a BBU.

For details about the installation of the BBU, see *DBS3900 Installation Guide*.

Copyright © Huawei Technologies Co., Ltd.

5 Installing a DCU

This chapter describes the process of installing a DCU.

For details about the installation of the DCU, see DCU3900 Installation Guide.

Copyright © Huawei Technologies Co., Ltd.

6 Installing an RHUB

About This Chapter

This chapter describes the process of installing an RHUB. RHUBs are classified into those with electrical transmission ports and those with no electrical transmission ports. Unless otherwise specified, this document uses the RHUBs with no electrical transmission ports as an example.

6.1 Information About the Installation

This section describes the information to be learnt before RHUB installation, including the RHUB installation scenarios, clearance, and installation environment.

6.2 Installation Process

The RHUB installation involves installing an RHUB module, installing RHUB cables, checking the RHUB hardware installation, and powering on the RHUB.

6.3 Installing an RHUB

An RHUB can be installed in a cabinet, rack, shelf, or on a wall.

6.4 Installing RHUB Cables

This section describes how to install cables for an RHUB.

6.5 Checking the RHUB Hardware Installation

After an RHUB is installed, check the installation of hardware including the devices and related cables.

6.6 Power-on Check on an RHUB

This section describes the power-on check on the RHUB after the RHUB hardware is installed and checked.

6.1 Information About the Installation

This section describes the information to be learnt before RHUB installation, including the RHUB installation scenarios, clearance, and installation environment.

Copyright © Huawei Technologies Co., Ltd.

6.1.1 Installation Scenarios

An RHUB can be installed in a 19-inch cabinet, rack, shelf, or on a wall.

NOTICE

To prevent the RHUB from water drops, the RHUB panel must not face upwards (shown in Figure 6-1) in any installation scenarios.

Figure 6-1 Improper installation mode

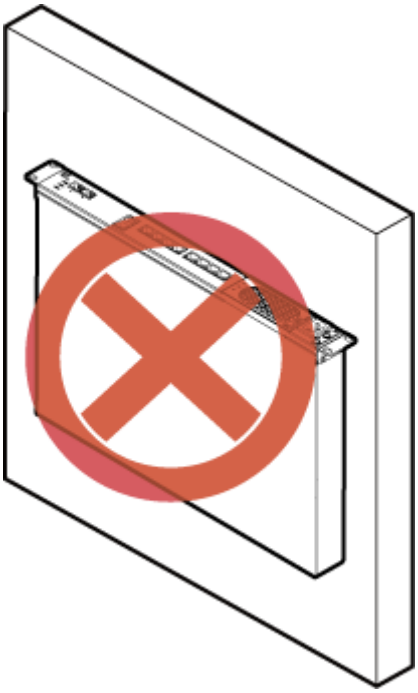

The RHUB mounting ears are installed in standard mode or reverse mode. The reverse mode is used by default. The two installation modes are defined as follows:

- In standard mode, the front of the mounting ear is aligned with the RHUB panel, as shown in Figure 6-2.

Copyright © Huawei Technologies Co., Ltd.

Figure 6-2 Installing mounting ears in standard mode

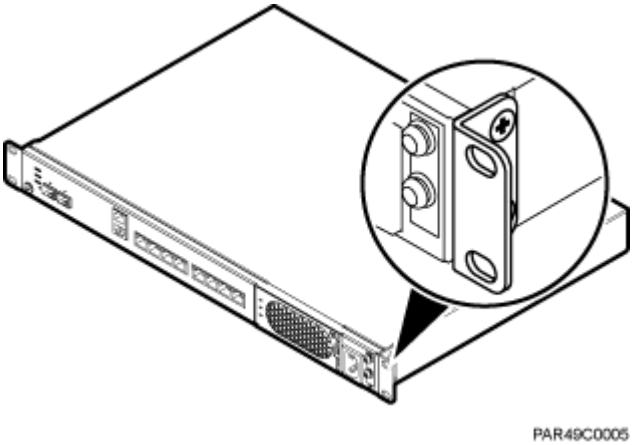

- In reverse mode, the front of the mounting ear is 31 mm away from the RHUB panel, as shown in Figure 6-3.

Figure 6-3 Installing mounting ears in reverse mode

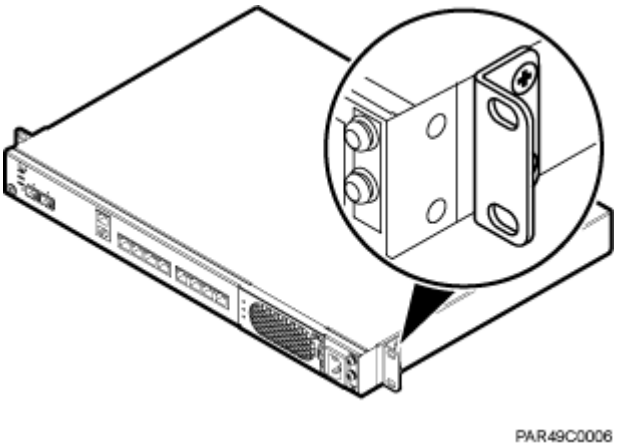

Installing an RHUB in a 19-Inch Cabinet or Rack

Installing an RHUB in a 19-inch cabinet or rack: Secure the mounting ear to the mounting bracket by using M6 screws.

- If there are no other modules installed in the 1 U space near the RHUB, install the RHUB directly. Otherwise, remove the modules before installing the RHUB.
- Before installation, you need to check the installation mode supported by the rack and adjust the position of the mounting ear.

Figure 6-4 and Figure 6-5 show RHUBs installed in a cabinet or rack, respectively.

Copyright © Huawei Technologies Co., Ltd.

Figure 6-4 Installing an RHUB in a 19-inch cabinet or rack in standard mode

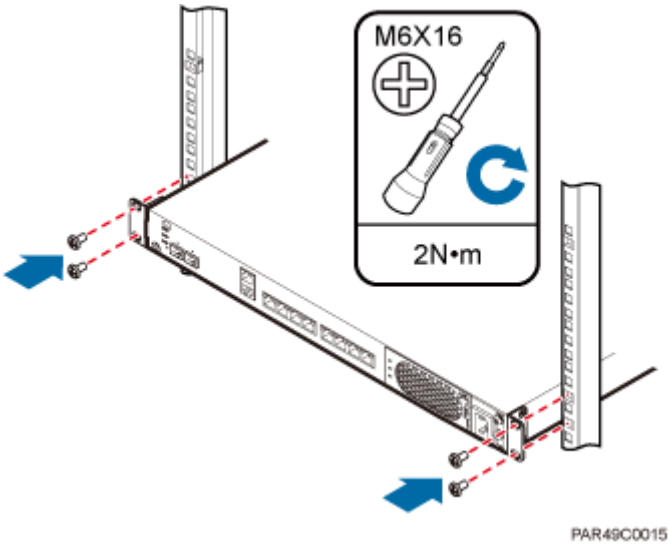

Figure 6-5 Installing an RHUB in a 19-inch cabinet in reverse mode

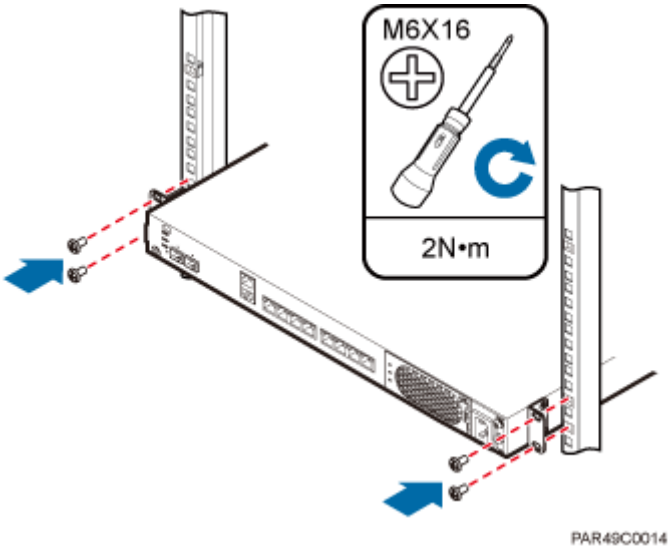

Installing an RHUB in a 19-Inch Shelf

When an RHUB is installed in a 19-inch shelf, the shelf must be installed on a wall. One shelf can house multiple RHUBs with 1 U space between two RHUBs.

Figure 6-6 and Figure 6-7 show RHUBs installed in a 19-inch shelf.

Copyright © Huawei Technologies Co., Ltd.

Figure 6-6 RHUB installed in a 19-inch shelf in standard mode

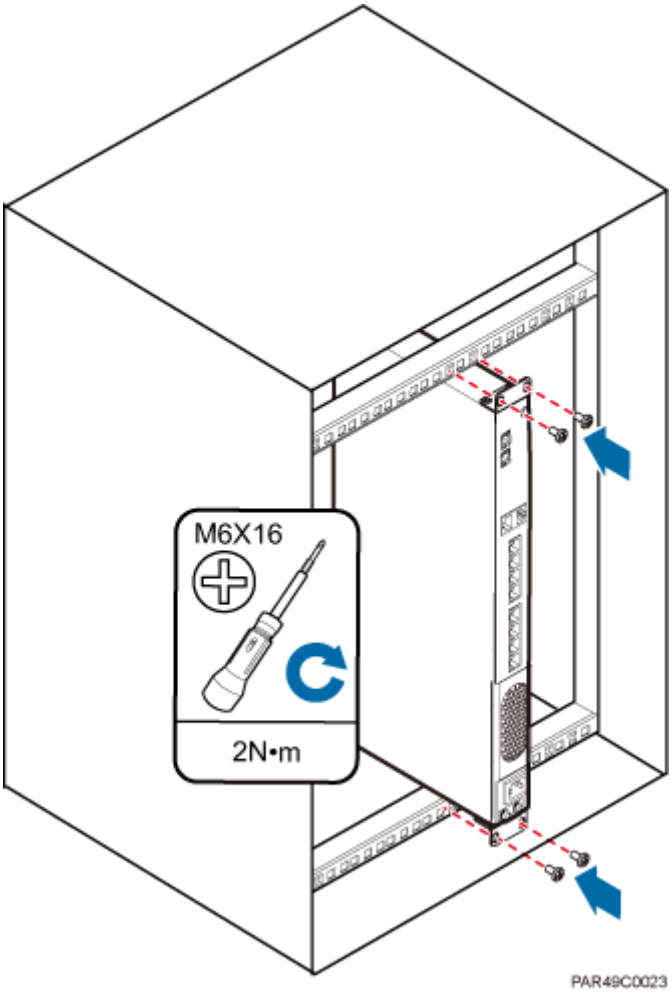

Copyright © Huawei Technologies Co., Ltd.

Figure 6-7 RHUB installed in a 19-inch shelf in reverse mode

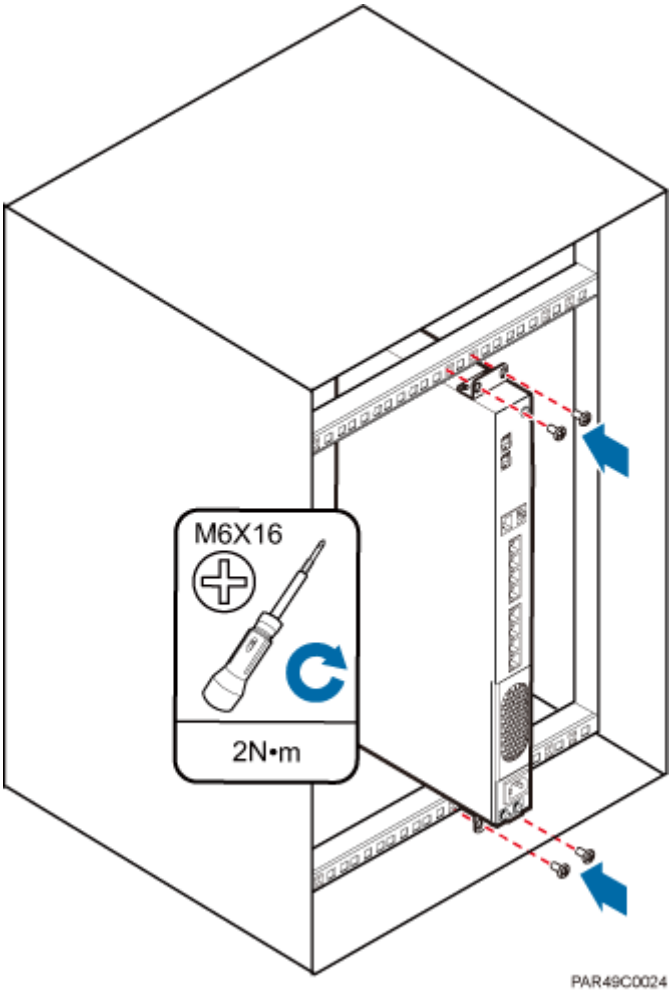

Installing an RHUB on a Wall

An RHUB can be installed on a wall.

The wall on which an RHUB is installed must meet the following requirements:

- When a single RHUB is installed, the wall must have a capacity of bearing at least four times the weight of the RHUB.
- Expansion bolts must be tightened to 10 N·m (88.507 bf·in.) to ensure the bolts work properly and the wall remains intact without cracks in it.

Figure 6-8 shows an RHUB installed on a wall.

Copyright © Huawei Technologies Co., Ltd.

Figure 6-8 RHUB installed on a wall

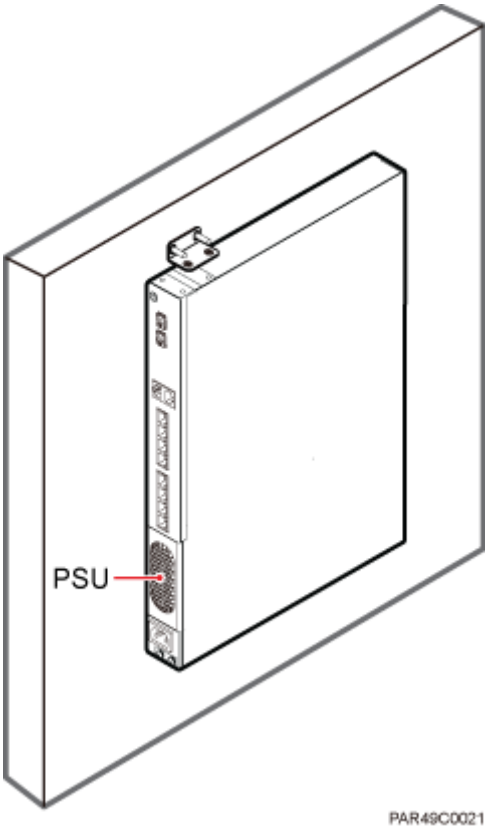

6.1.2 Installation Clearance Requirements

When an RHUB is installed in a 19-inch cabinet, rack, shelf, or on a wall, a minimum clearance is required for easy cabling and operation and maintenance. A recommended installation clearance is provided based on experience.

NOTICE

- Do not install or place inflammable materials above or under an RHUB.
- A clearance of 350 mm must be reserved in front of the air intake vent of the fan of the power supply unit (PSU) for maintenance.

Figure 6-9 shows the installation clearance for the RHUB installed in a 19-inch cabinet, rack, or shelf.

Copyright © Huawei Technologies Co., Ltd.

Figure 6-9 Installation clearance for an RHUB installed in a 19-inch cabinet, rack, or shelf

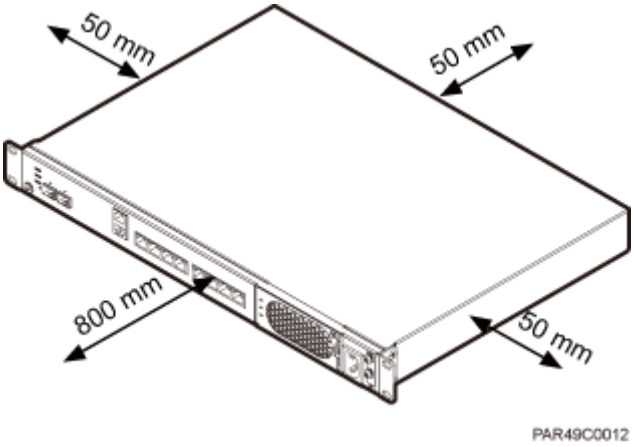

Figure 6-10 and Figure 6-11 shows the recommended and minimum installation clearance respectively when the RHUB is installed on a wall.

Copyright © Huawei Technologies Co., Ltd.

Figure 6-10 Recommended installation clearance for a wall-mounted RHUB (unit: mm)

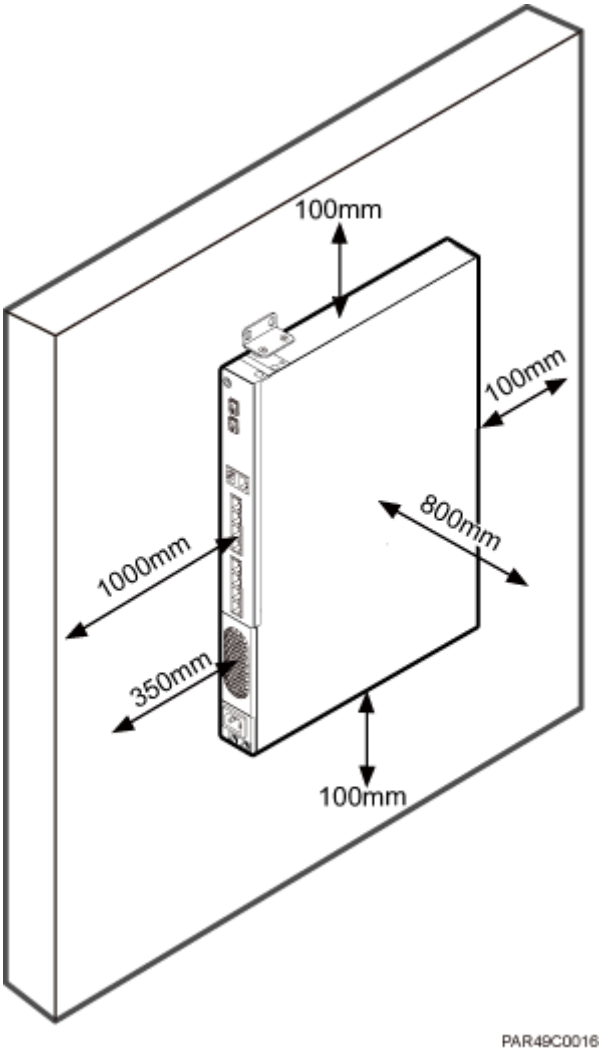

Copyright © Huawei Technologies Co., Ltd.

Figure 6-11 Minimum installation clearance for a wall-mounted RHUB (unit: mm)

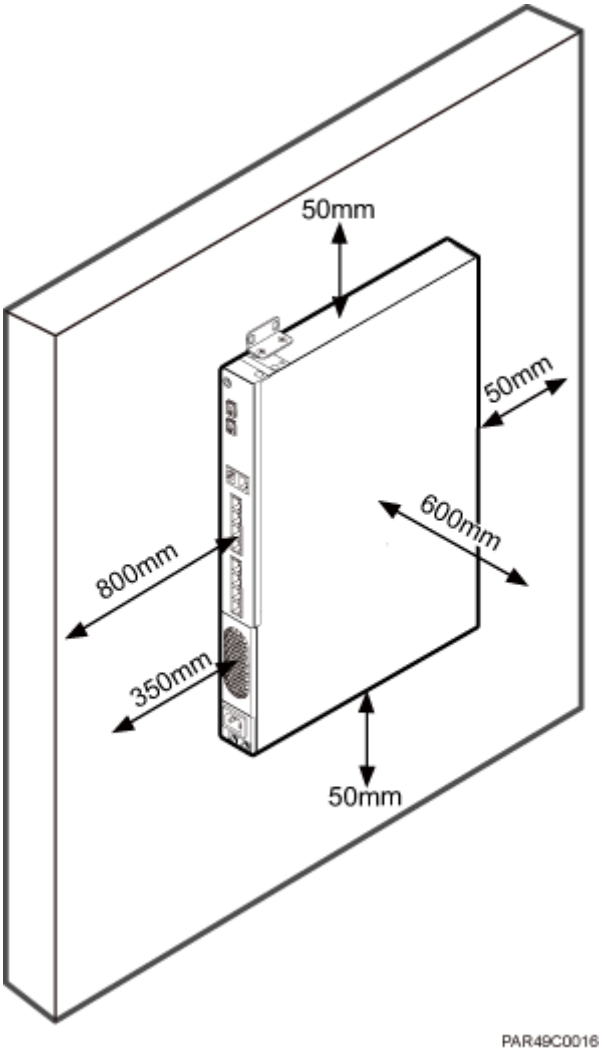

6.1.3 Installation Environment

The installation environment of an RHUB involves the running environment specifications for the RHUB and other specifications.

RHUB Running Environment Specifications

Table 6-1 shows the environment specifications for the RHUB installed indoors.

- The temperature and humidity of the installation position must ensure normal operation. A cool and ventilated place is recommended.
- The heat dissipation holes on the RHUB cannot be blocked.

Table 6-1 RHUB environment specifications

Specifications	Installation Scenario	RHUB Quantity	Condition	Remarks

Copyright © Huawei Technologies Co., Ltd.

Specifications	Installation Scenario	RHUB Quantity	Condition	Remarks
Operating temperature	Installed on a wall or in a 19-inch rack.	N/A	-5°C to +50°C	N/A
	Installed in a shelf.	1	-5°C to +45°C	N/A
		2	-5°C to +43°C	N/A
		3	-5°C to +40°C	N/A
Relative humidity	Installed in all scenarios.	N/A	5% RH to 95% RH	N/A
Altitude	N/A	N/A	-60 m to +1800 m	Works properly.
			1800 m to 4000 m	Above the 1800 m altitude, the maximum operating temperature decreases by 1°C each time the altitude increases by 220 m.

NOTE
Installing more than one RHUB, 1 U space is required between two RHUBs.

Other Running Environment Specifications

- The RHUB cannot be installed at an air outlet of the heat dissipation box of an air conditioner or other heat-generating appliances.
- The RHUB cannot be installed near a strong heat source.
- The RHUB cannot be installed in a position with water dripping, such as outdoor equipment of air conditioners, pipe, and leaking or dripping roofs.
- The installation position must be far from rains. If the RHUB is installed on a wall, there must be no window on either side of the wall.
- The installation position must be far away from high voltage, highly corrosive devices, flammable or explosive substances, and electromagnetic interference such as power stations, high-voltage substations, and wired TV towers.
- The RHUB must be installed in a dry, ventilating, and dust-proof place.
- If the RHUB is installed in parking areas or basements, the installation position must be well-ventilated.

Copyright © Huawei Technologies Co., Ltd.

Requirements for the Upper-level Circuit Breaker

Type C upper-level AC circuit breakers or slow-blow fuses must be used for power cables. The maximum current must not exceed 16 A. Table 6-2 describes the recommended specifications.

Table 6-2 Circuit breaker specifications for power cables

Power Supply	Upper-level AC Circuit Breaker (For a single RHUB)	Cross-Sectional Area of the Input Power Cable
220 V AC single-phase	≥ 6 A	1.5 mm^2
110 V AC dual-live-wire		
110 V AC single-phase	≥ 12 A	

6.2 Installation Process

The RHUB installation involves installing an RHUB module, installing RHUB cables, checking the RHUB hardware installation, and powering on the RHUB.

Figure 6-12 shows the RHUB installation process.

Copyright © Huawei Technologies Co., Ltd.

Figure 6-12 RHUB installation process

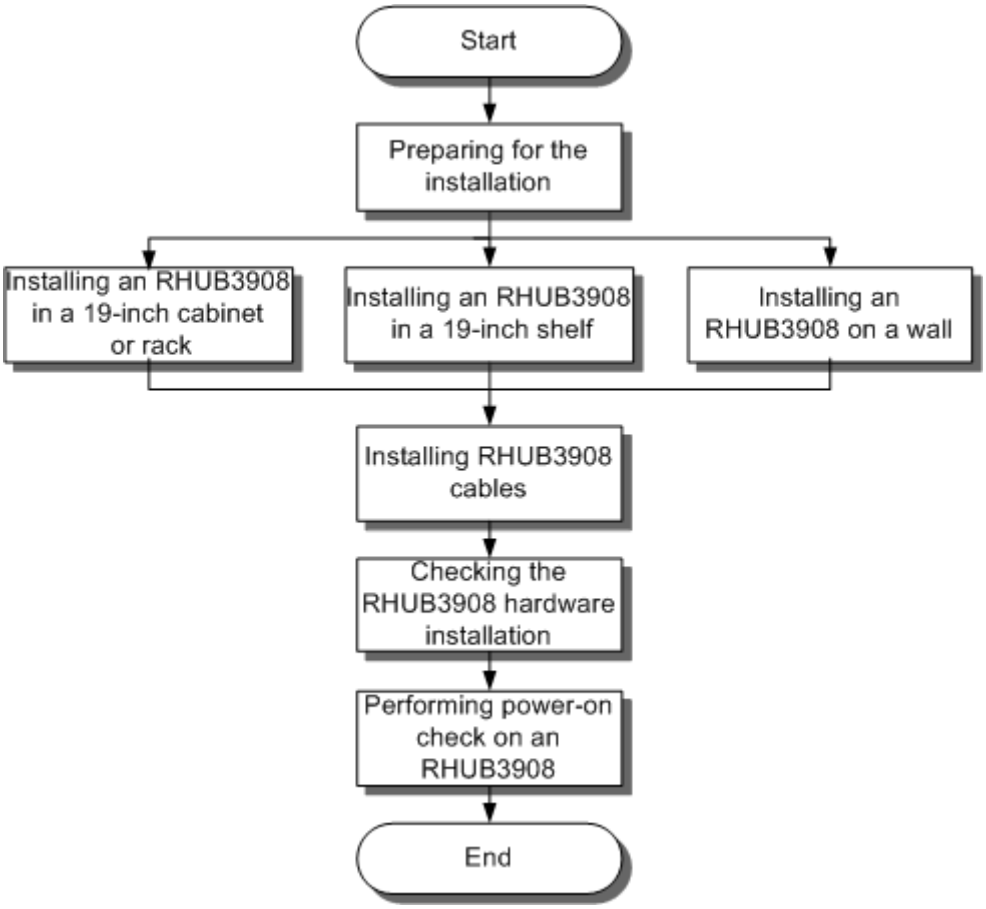

6.3 Installing an RHUB

An RHUB can be installed in a cabinet, rack, shelf, or on a wall.

6.3.1 Installing an RHUB in a 19-Inch Cabinet or Rack

This section describes how to install an RHUB in a 19-inch cabinet.

Procedure

- The following describes how to install an RHUB with mounting ears in reverse mode:

NOTE

If necessary, request one more person for assistance.

a. With one hand holding it, align the mounting holes with the installation holes, slowly push the RHUB into the required position in the cabinet, as shown in Figure 6-13.

Copyright © Huawei Technologies Co., Ltd.

Figure 6-13 Pushing an RHUB into a cabinet

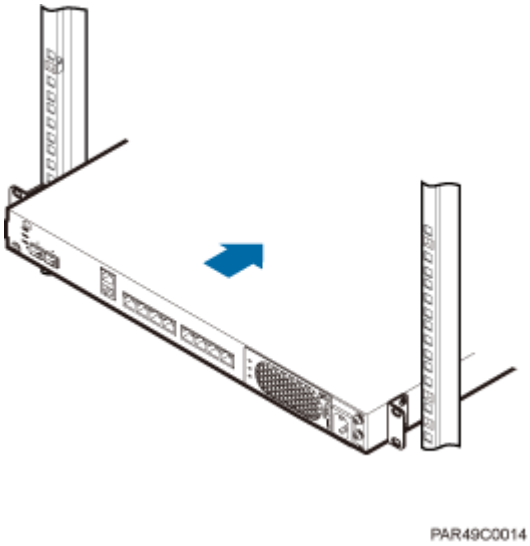

b. Use a torque screwdriver or Phillips screwdriver to tighten the four M6×16 screws with a torque of 2 N•m, as shown in Figure 6-14.

Figure 6-14 Tightening screws

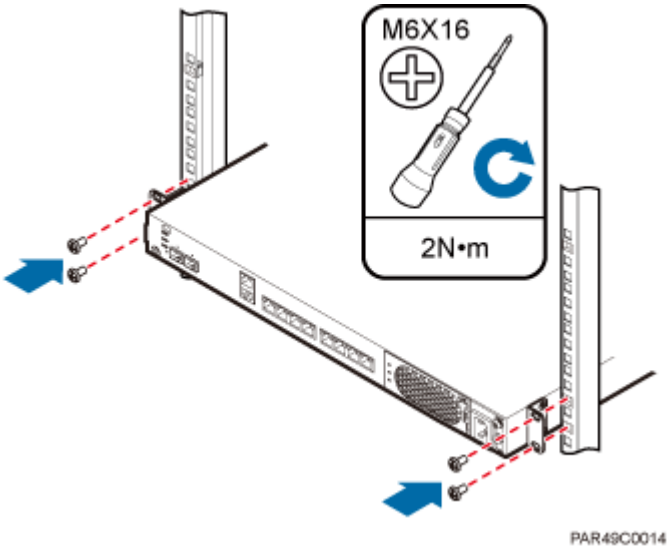

- The following describes how to install an RHUB with mounting ears aligned with the RHUB panel:

NOTE

If necessary, request one more person for assistance.

a. Remove the mounting ears on both sides of the RHUB by removing the four M4×8 screws, as shown in Figure 6-15.

Copyright © Huawei Technologies Co., Ltd.

Figure 6-15 Removing mounting ears and screws

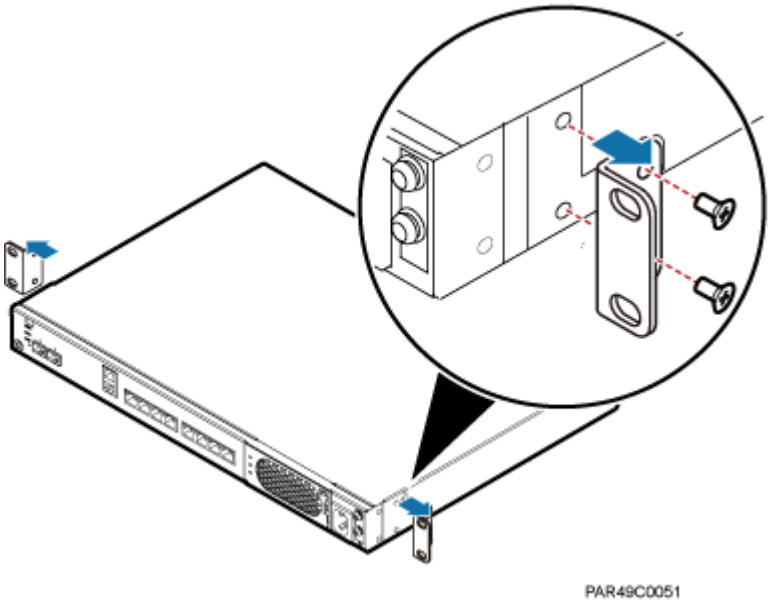

b. Use a torque screwdriver or Phillips screwdriver to tighten the four M4×8 screws with a torque of 1.4 N•m to install the removed mounting ears again, as shown in Figure 6-16. The mounting ears must be aligned with the RHUB panel.

Figure 6-16 Installing mounting ears in standard mode

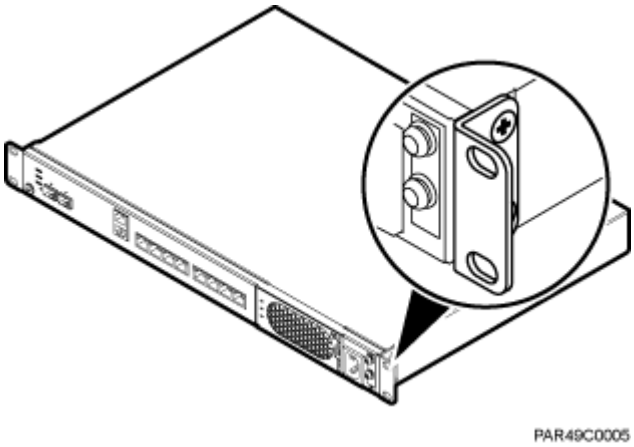

c. With one hand holding it, align the mounting holes with the installation holes, slowly push the RHUB into the required position in the cabinet, as shown in Figure 6-17.

Copyright © Huawei Technologies Co., Ltd.

Figure 6-17 Pushing an RHUB into a cabinet

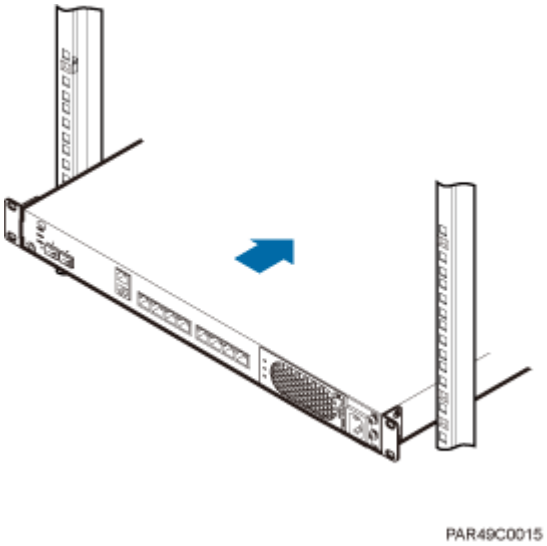

d. Use a torque screwdriver or Phillips screwdriver to tighten the four M6×16 screws with a torque of 2 N•m, as shown in Figure 6-18.

Figure 6-18 Tightening screws

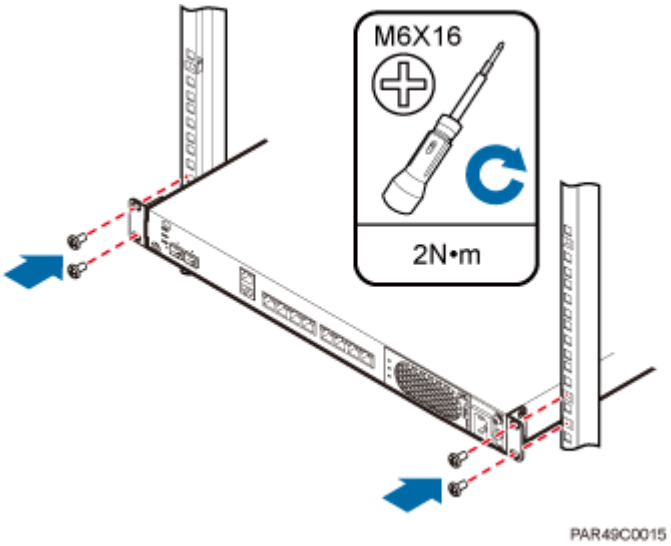

----End

6.3.2 Installing an RHUB in a 19-Inch Shelf

If a shelf houses more than one RHUB, 1 U space is required between two RHUBs. The PSU must be installed at the bottom of the cabinet.

Copyright © Huawei Technologies Co., Ltd.

Procedure

- The following describes how to install an RHUB with mounting ears installed in reverse mode:

NOTE

If necessary, request one more person for assistance.

a. With one hand holding it, align the mounting holes with the installation holes, slowly push the RHUB into the required position in the shelf.

b. Use a torque screwdriver or Phillips screwdriver to tighten the four M6×16 screws with a torque of 2 N•m, as shown in Figure 6-19.

Figure 6-19 Tightening screws

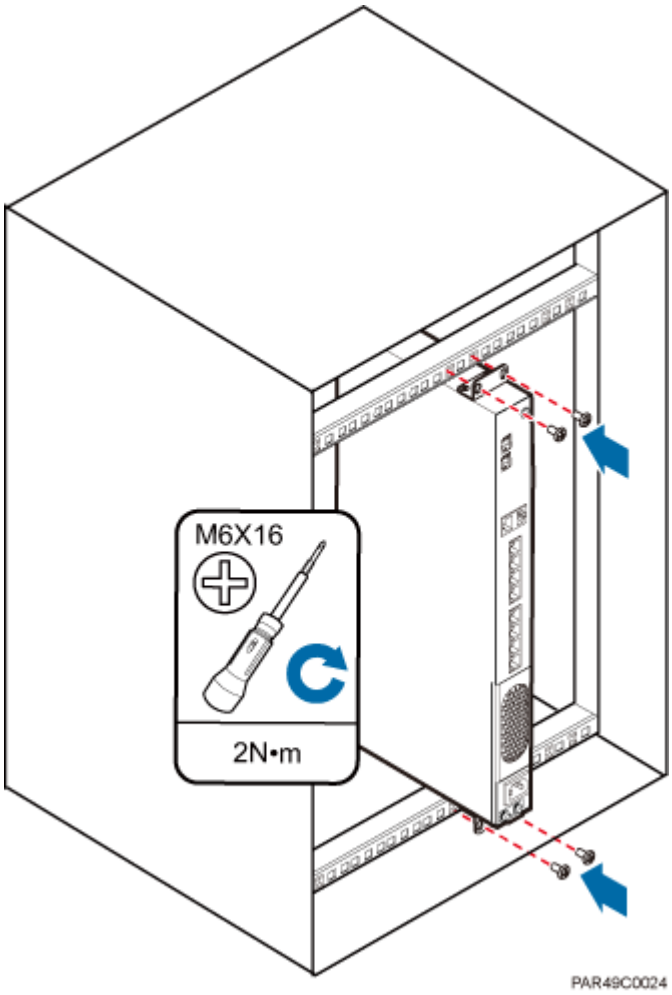

- The following describes how to install an RHUB with mounting ears installed in standard mode:

NOTE

If necessary, request one more person for assistance.

a. Remove the mounting ears on both sides of the RHUB by removing the four M4×8 screws, as shown in Figure 6-20.

Copyright © Huawei Technologies Co., Ltd.

Figure 6-20 Removing mounting ears and screws

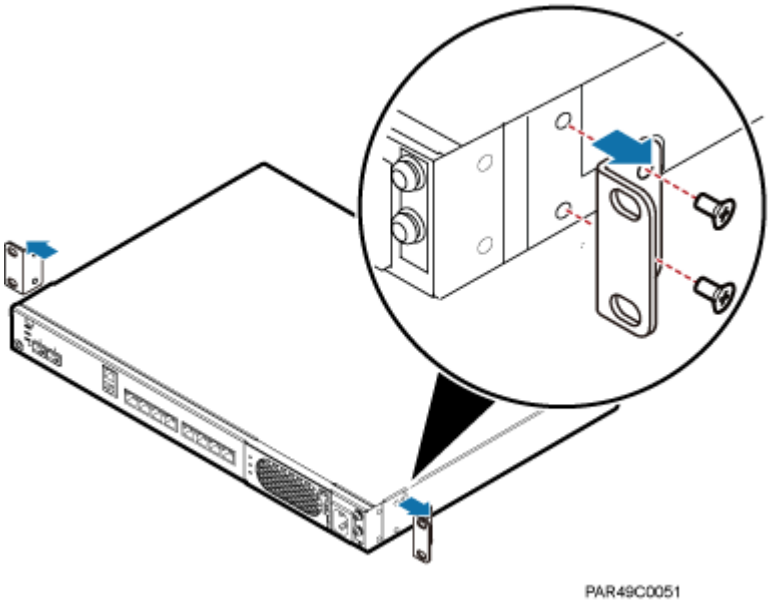

b. Use a torque screwdriver or Phillips screwdriver to tighten the four M4×8 screws with a torque of 1.4 N•m to install the removed mounting ears again, as shown in Figure 6-21. The mounting ears must be aligned with the RHUB panel.

Figure 6-21 Installing mounting ears in standard mode

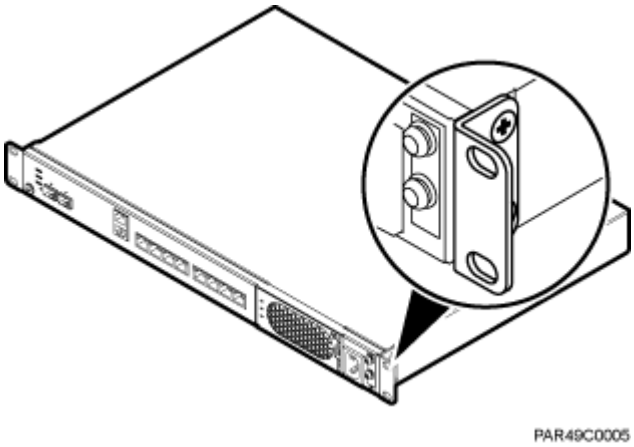

c. With one hand holding it, align the mounting holes with the installation holes, slowly push the RHUB into the required position in the cabinet, as shown in .

d. Use a torque screwdriver or Phillips screwdriver to tighten the four M6×16 screws with a torque of 2 N•m, as shown in Figure 6-22.

Copyright © Huawei Technologies Co., Ltd.

Figure 6-22 Tightening screws

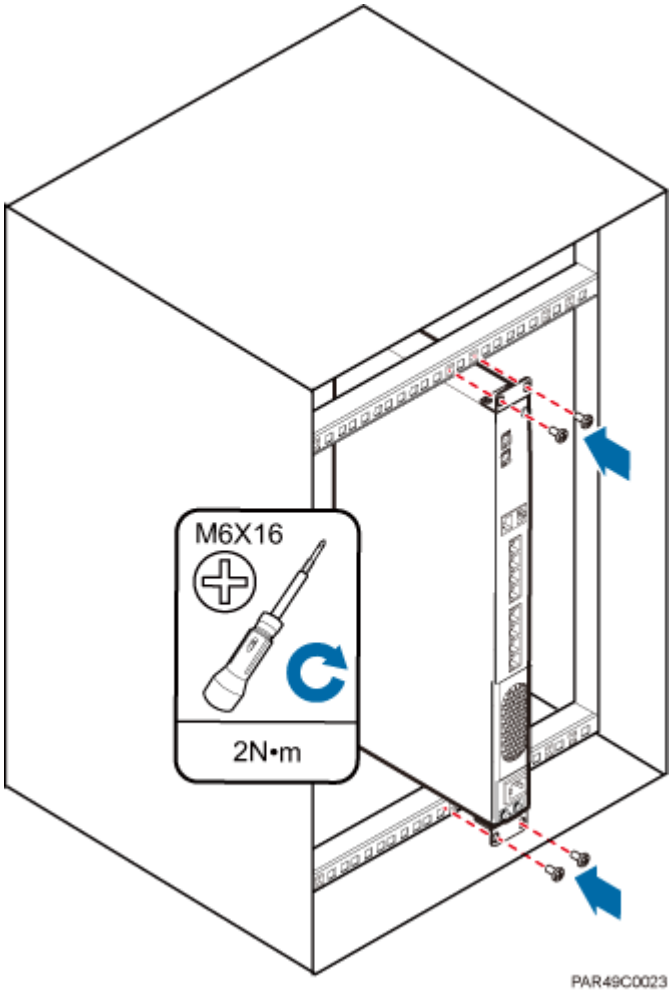

----End

6.3.3 Installing an RHUB on a Wall

An RHUB can be installed on a wall.

Context

CAUTION

Suitable for mounting on concrete or other non-combustible surface only.

Procedure

Step 1 The mounting ears are installed in reverse mode by default. Before installing an RHUB on a wall, modify the installation mode of the mounting ears on the RHUB.

Copyright © Huawei Technologies Co., Ltd.

- Use a torque screwdriver or Phillips screwdriver to remove the mounting ears on both sides of the RHUB by removing the four M4×8 screws, as shown in Figure 6-23.

Figure 6-23 Removing screws and mounting ears

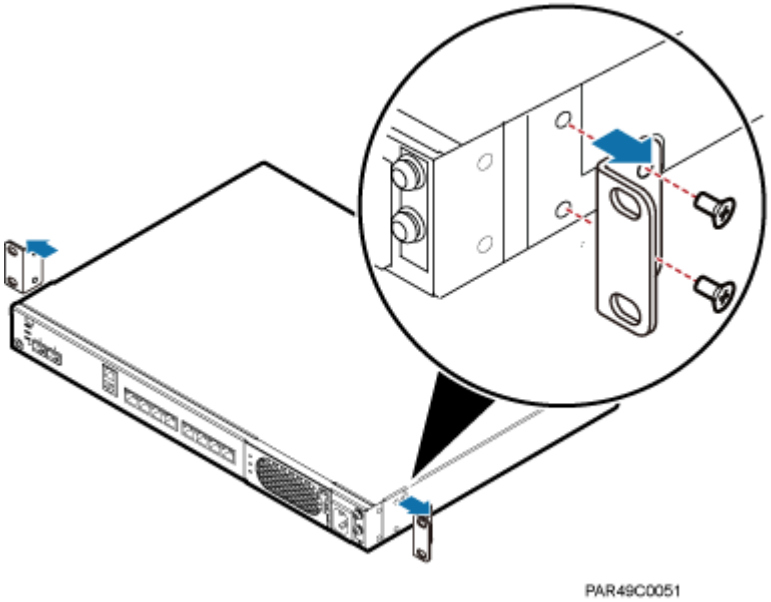

- Rotate the mounting ears 90 degrees clockwise, and use a torque screwdriver or Phillips screwdriver to secure the mounting ear with a torque of 1.4 N•m, as shown in Figure 6-24.

Figure 6-24 Installing mounting ears and screws

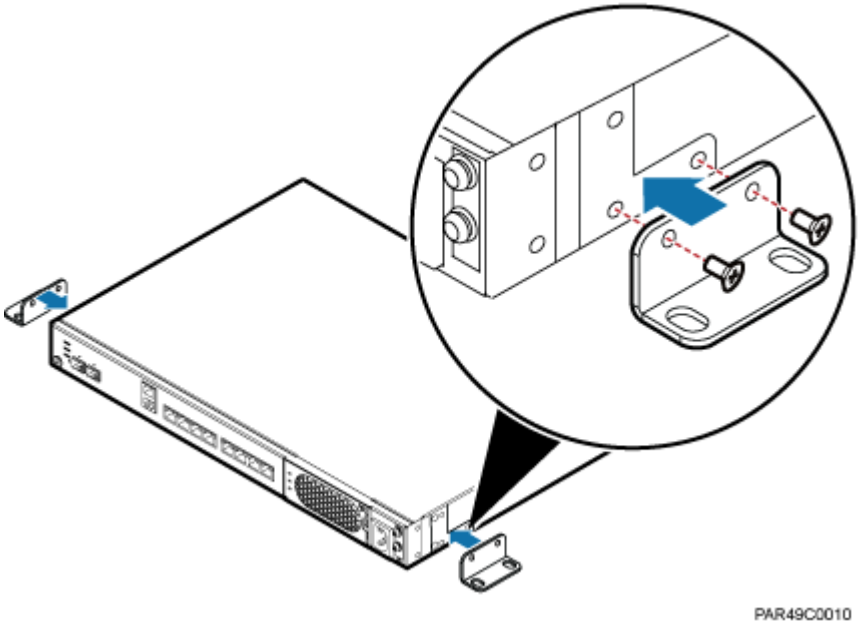

Step 2 Determine the position on the wall for installing the RHUB based on the requirements in the engineering blueprint and 6.1.2 Installation Clearance Requirements. Place the RHUB to the

Copyright © Huawei Technologies Co., Ltd.

position to be installed against the wall, and then mark the four anchor points where the mounting ear screws are fastened using a marker, as shown in Figure 6-25.

Figure 6-25 Anchor points for installing an RHUB on a wall

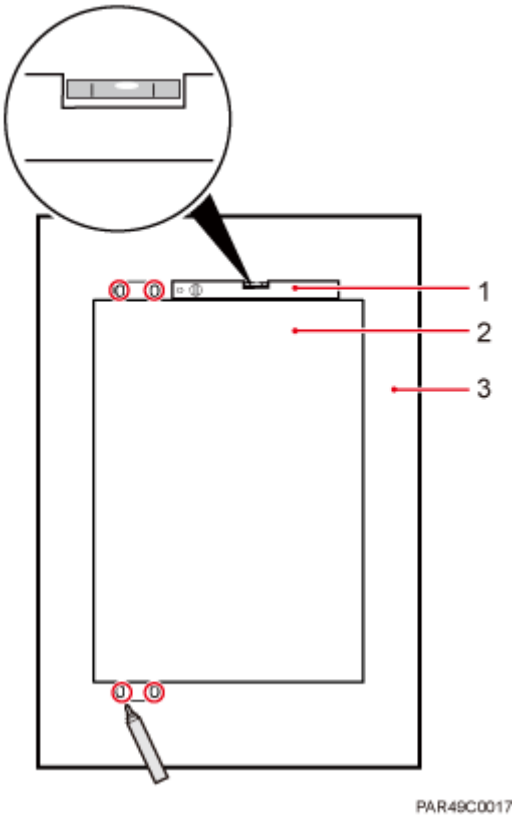

(1) Level (2) RHUB (3) Wall

CAUTION

To prevent inhalation or eye contact with dust, take adequate preventive measures when drilling holes.

Step 3 Drill holes at the anchor point and install expansion bolts, as shown in Figure 6-26.

Copyright © Huawei Technologies Co., Ltd.

Figure 6-26 Drilling holes and installing expansion bolts

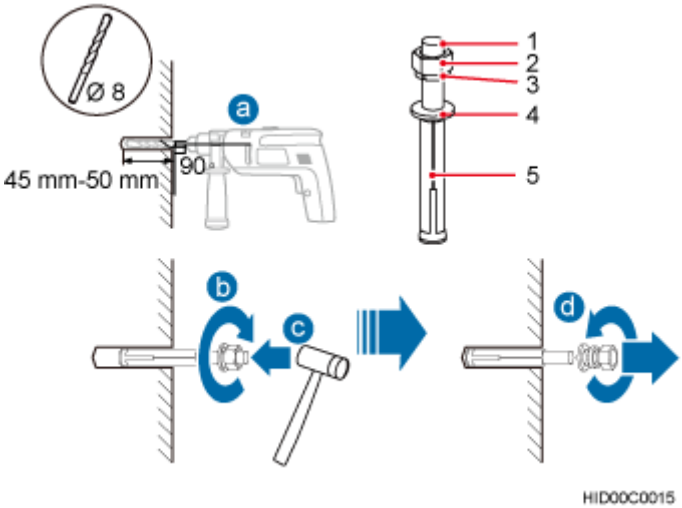

(1) M6×60 expansion bolt	(2) Nut	(3) Spring washer	(4) Flat washer	(5) Extension tub

1. Use a hammer drill with bit 8 to drill holes with a diameter of 8 mm and a depth of 45 mm to 50 mm at the marked anchor points. All the holes have the same depth.
2. Use a vacuum cleaner to clear the dust inside and around each hole. If the distance between two holes is incorrect, mark and drill holes again.
3. Partially tighten an expansion bolt and place it vertically into each hole.
4. Use a rubber mallet to hit the expansion bolt until the entire expansion sleeve is in the hole.
5. Remove the M6×60 bolt, nut, spring washer, and flat washer from each expansion bolt in sequence.

NOTICE

After removing an expansion bolt, ensure that the top of the expansion sleeve is level with the wall. If it is not level, the RHUB cannot be installed on the concrete floor evenly and securely.

Step 4 Align the mounting holes with the four M6×60 expansion bolts. Install spring washer 6 and flat washer 6 in sequence on each M6×60 expansion bolt, insert the bolts to each expansion tub, and then use a torque wrench or socket wrench to tighten the four M6×60 bolts with a torque of 5 N•m to secure the RHUB to the wall, as shown in Figure 6-27.

Copyright © Huawei Technologies Co., Ltd.

Figure 6-27 Installing an RHUB on a wall

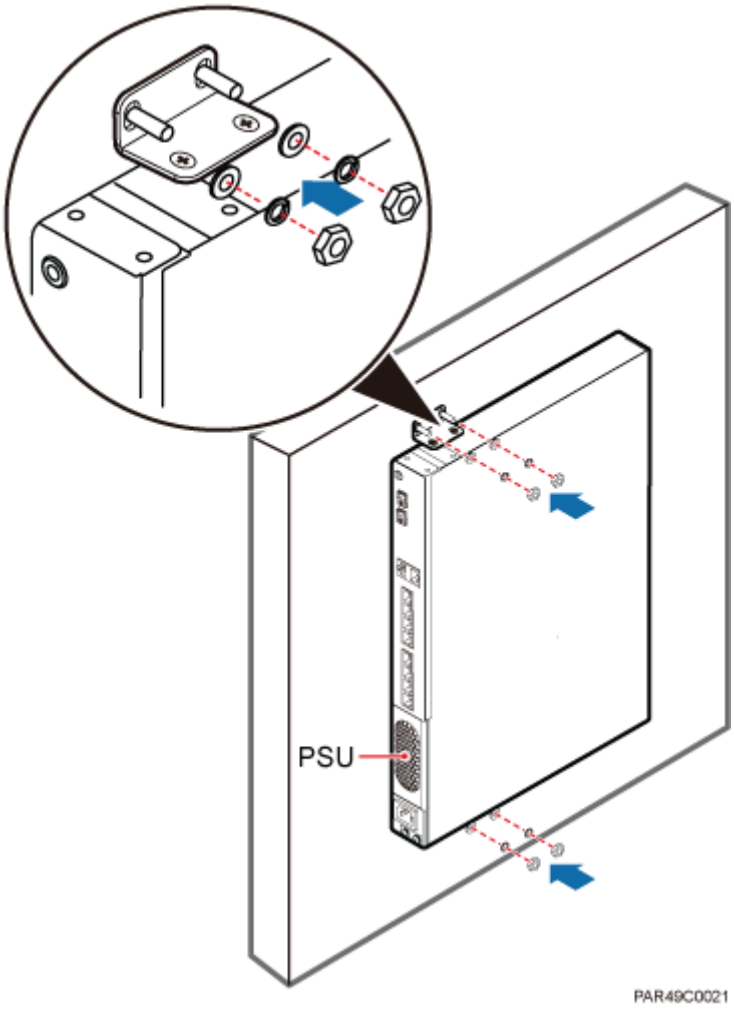

NOTE

As shown in the preceding figure, when the RHUB is placed against the wall, ensure that the RHUB panel is vertical to the ground and the PSU is on the lower part of the RHUB panel.

----End

6.4 Installing RHUB Cables

This section describes how to install cables for an RHUB.

6.4.1 Requirements for Cable Layout

Cables must be routed according to the specified cabling requirements to prevent signal interference.

NOTE

If a cable listed below is not required, skip the requirements for routing the cable.

Copyright © Huawei Technologies Co., Ltd.

General Requirements for Cable Layout

National Standards

- Code for Engineering Design of Generic Cabling System for Building and Campus (GB 50311-2007)
- Code for Engineering Acceptance of Generic Cabling System for Building and Campus (GB50312-2007).
- Security Protection Engineering Technology Specifications (GB 50348-2004)
- Code for Construction and Acceptance of the Electronic Information System Room (GB 50462-2008)
- Code for Quality Acceptance of the Intelligent Building Engineering (GB 50339-2003)
- Code for Quality Acceptance of Electric Engineering Construction in Building (GB 50303-2002)
- Technical Specification for Construction and Acceptance of Telecommunication Conduit Engineering (GB 50374-2006)

International Standards

- Generic Cabling for Customer Premises (ISO/IEC 11801)
- Commercial Building Telecommunications Cabling Standard (EIA/TIA 568)
- Commercial Building Standard for Telecommunication Pathways and Spaces (EIA/TIA 569)
- Administration Standard for Commercial Telecommunications Infrastructure (EIA/TIA 606)
- Grounding and Bonding Requirements for Telecommunications in Commercial Buildings (EIA/TIA 607)
- Generic Cabling Systems for Information Technology (EN 50173)
- Cabling Installation for Information Technology (EN 50174)

Bending radius

- The bending radius of a power cable or a protection ground (PGND) cable is at least five times the diameter of the cable.
- The bending radius of an optical cable is at least 20 times the diameter of the optical cable, and the minimum bending radius of the branch at each end of the optical cable is 30 mm.
- The bending radius of the signal cable must be at least five times the diameter of the cable.

Cable Binding

- Cables of the same type are bound together.
- Different types of cables must be separately routed with a minimum spacing of 30 mm and cannot be entangled or crossed.
- The cables are bound tightly and neatly and the cable sheath is intact.
- The cable ties face the same direction and all cable ties bound at similar positions must be in a straight line.
- The extra length of each indoor cable tie must be cut off. A slack of 5 mm is reserved for each outdoor cable tie. All cut surfaces have no sharp edges.

Copyright © Huawei Technologies Co., Ltd.

- Labels or nameplates are attached to both ends, joints, or turns of cables after they are installed.

Safety

- The steel pipe or fire-resistant rigid polyvinyl chloride pipe should be used for the cable duct or for routing cables. The cross-sectional usage of the cable duct should be 30% to 50% and that of the pipe for routing cables should be 25% to 30%.
- Cables are placed away from sharp objects or wall burrs. If these positions are inevitable, protection pipes are required for the cables.
- Cables are routed away from heat sources, or heat-insulation materials are added between cables and heat sources.
- Cables are routed away the cooling vents of the RHUB.
- A clearance is reserved at turns of a cable or the position close to a device, facilitating cable and device maintenance. The recommended clearance is about 0.1 m.

Requirements for Special Cables

Ethernet Cable

- A maximum of 100 Ethernet cables can be bundled if no PVC pipes are used. If pipes are used, a maximum of 24 Ethernet cables can be led through a pipe. In this case, ensure that 1/3 space inside the pipes must be vacant.
- The point at which an Ethernet cable is bundled must be spaced 400 mm or less from the Ethernet port on an RHUB.
- For the RHUB used in the elevator engine room on the rooftop, generator set for the subway engine, and equipment room with central air conditioning, Ethernet cables must be led through metallic conduits that are reliably grounded at both ends.

Power cable

- Positions for routing power cables meet requirements of the engineering design.
- Cables are routed only by qualified and trained personnel before all preparations are made.
- Cables are routed in an untangled and orderly fashion.

PGND cable

- PGND cables are buried in the ground or routed indoors. They cannot be routed overhead before they are routed into the equipment room.
- Outer conductors of coaxial cables and both ends of the shield layers on shielded cables are in proper electrical contact with the metal surface of the equipment to which they are connected.
- PGND cables and signal cables are installed in an untangled and orderly fashion. A certain distance is reserved between them to prevent interference from each other.
- Fuses or switches are not allowed on PGND cables.
- Other devices cannot be used for electrical connections of PGND cables.
- All the metal parts in the equipment are reliably connected to the ground terminal.

Optical cable

- Cables are routed in an untangled and orderly fashion.
- Optical fibers cannot be bound at turns.

Copyright © Huawei Technologies Co., Ltd.

- Optical fibers cannot be stretched with too much force or stepped on, and they are far away from sharp objects. Heavy objects cannot be placed on optical cables.
- When optical cables are routed, the extra length of the cables is coiled around special devices, such as a fiber coiler.
- Even strength is applied when optical cables are coiled and optical cables cannot be bent in a forcible manner.
- Vacant optical connectors are covered with dust-proof caps.
- Fiber optic cables cannot be squeezed by the cabinet door when routed through the cabinet.
- If optical cables need to be routed on the tower platform, the optical cables are routed along the inner side of the guard rail and the distance between the guard rail and the cable is the shortest one.
- If optical cables need to be routed close to a device on the tower, the optical cables are secured to the guard rail or pole with cable clips and the device cannot be far away from the position for securing the optical cables.
- If the optical cable close to a device on the tower is too long, the optical cables are wrapped and secured to the tower.

6.4.2 Cable List

The DBS3900 LampSite cable list includes BBU cable list, DCU cable list, RHUB cable list, pRRU cable list.

BBU Cable List

The following table lists BBU3900 cables and BBU3910 cables.

NOTE
Except the CPRI fiber optic cable, for details about the cables exterior and related description in Table 6-3 and Table 6-4, see *3900 Series Base Station Cables*.

Table 6-3 BBU3900&BBU3910 cable list

Cable	One End		The Other End	
	Connector	Installation Position	Connector	Installation Position
BBU PGND Cable	OT terminal (M4, 6 mm^2 or 0.009 $in.^2$)	Ground terminal on the BBU	OT terminal (M8, 6 mm^2 or 0.009 $in.^2$)	External ground bar
BBU Power Cable	3V3 connector	-48V port on UPEU in BBU	Depending on the power equipment	Depending on the power equipment
E1/T1 Cable	DB26 male connector	E1/T1 port on the UMPT, GTMU, UELP, WMPT, or UTRP in the BBU	Depending on site requirements	External transmission equipment
E1/T1 Surge	DB26 male	E1/T1 port on	DB25	INSIDE port

Copyright © Huawei Technologies Co., Ltd.

Cable	One End		The Other End	
	Connector	Installation Position	Connector	Installation Position
Protection Transfer Cable	connector	the UMPT, GTMU, UELP, WMPT, or UTRP in the BBU	connector	on the UELP in the SLPU
FE/GE Ethernet Cable	RJ45 connector	• FE0 port near OUTSIDE on the UFLP in the BBU • FE0 port on the UMPT, GTMU, or WMPT in the BBU • FE/GE port on the UTRP in the BBU • FE/GE port on the LMPT in the BBU	RJ45 connector	External transmission equipment
FE/GE Surge Protection Transfer Cable	RJ45 connector	FE0 port on the UMPT, GTMU, or WMPT in the BBU FE/GE port on the UTRP in the BBU	RJ45 connector	FE0 port near INSIDE on the UFLP in the SLPU
Interconnection Cable Between FE/GE Electrical Ports	RJ45 connector	FE0 port on the WMPT in the BBU	RJ45 connector	FE0 port on the GTMU in the BBU
Interconnection Cable Between FE/GE Optical Ports	LC connector	FE1 port on the WMPT in the BBU	LC connector	FE1 port on the GTMU in the BBU
FE/GE Fiber Optic Cable	LC connector	FE1 port on the WMPT, GTMU, LMPT, or UMPT in the	FC, SC, or LC connector	External transmission equipment

Copyright © Huawei Technologies Co., Ltd.

Cable	One End		The Other End	
	Connector	Installation Position	Connector	Installation Position
		BBU		
CPRI Optical Fiber	DLC connector	CPRI port on the GTMU, WBBP, LBBP, or UBRI in the BBU	DLC connector	CPRI_W port on an RRU
APMI-BBU Monitoring Signal Cable	RJ45 connector	MON1 port on the UPEU or UEIU in the BBU	Twisted pair	TX+, TX-, RX+, or RX- port on the APMI
HEUA-BBU Monitoring Signal Cable	RJ45 connector	M0N1 port on the UPEU or UEIU in the BBU	RJ45 connector	COM_IN port on the HEUA
CMUA-BBU Monitoring Signal Cable	RJ45 connector	M0N1 port on the UPEU or UEIU in the BBU	RJ45 connector	COM_IN port on the CMUA
CMUE-BBU Monitoring Signal Cable	RJ45 connector	M0N1 port on the UPEU or UEIU in the BBU	RJ45 connector	COM_IN port on the CMUE
CMUEA-BBU Monitoring Signal Cable	RJ45 connector	M0N1 port on the UPEU or UEIU in the BBU	RJ45 connector	COM_IN port on the CMUEA
EMUA/EMUB Monitoring Signal Cable	RJ45 connector	M0N1 port on the UPEU or UEIU in the BBU	DB9 male connector	RS-485 port on the EMUA
PSU (EPW25-24S48D) Monitoring Signal Cable	RJ45 connector	EXT_ALM0 port on the UPEU or UEIU in the BBU	Cord end terminal	ALM terminal on the PSU (DC/DC)
PSU (EPW25-24S48D) In-Position Signal Cable	RJ45 connector	EXT_ALM0 port on the UPEU or UEIU in the BBU	RJ45 connector	RESENT port on the PSU (DC/DC)
BBU Alarm Cable	RJ45 connector	EXT_ALM0 port on the UPEU or	RJ45 connector	External alarm device

Copyright © Huawei Technologies Co., Ltd.

Cable	One End		The Other End	
	Connector	Installation Position	Connector	Installation Position
		UEIU in the BBU		
GPS Clock Signal Cable	SMA male connector	GPS port on LMPT, USCU, or UMPTa6 in the BBU	Type N female connector	GPS surge protector
BBU Interconnection Signal Cables	DLC connector	M0 to M4 ports on the UCIU in the BBU	DLC connector	CI port on the UMPT in the BBU
Cable Between Two Combined Base Stations	DB15 male connector	GCK port on the UCIU in the BBU	MD36 or DB15 male connector	DCTB or DGLUb
Adapter Used for Local Maintenance	USB[a] connector	USB[a] port on the UMPT in the BBU	Network connector	Ethernet cable

NOTE

a: The security of the USB port is ensured by encryption, and the USB port can be shut down using commands. The USB commission port is used for commissioning the base station rather than configuring and exporting information of the base station.

The following table lists BBU3910A cables.

Table 6-4 BBU3910A cable list

Cable	One End		The Other End	
	Connector	Installation Position	Connector	Installation Position
PGND cable for the BBU3910A	OT terminal (M6, 16 mm^2 or 0.025 $in.^2$)	Ground terminal on the BBU3910A	OT terminal (M8, 16 mm^2 or 0.025 $in.^2$)	Ground terminal on the ground bar
Power cable for the BBU3910A	EPC4 connector	NEG(-) and RTN(+) ports on the BBU3910A	Depending on the power equipment	Depending on the power equipment
Dry contact alarm cable for the BBU3910A	DB15 waterproof male connector (waterproof on the connector's both sides)	EXT_ALM port on the BBU3910A	Cord end terminal	Equipment to be monitored
RS485 alarm cable for the	DB15 waterproof	EXT_ALM port on the	RJ45 connector	COM_IN port on the

Copyright © Huawei Technologies Co., Ltd.

Cable	One End		The Other End	
	Connector	Installation Position	Connector	Installation Position
BBU3910A	male connector (waterproof on the connector's both sides)	BBU3910A		OPM50M
CPRI Optical Fiber	DLC connector	CPRI port on the BBU3910A	DLC connector	CPRI_W port on an RRU
FE/GE fiber optic cable	LC connector	GE1 port on the BBU3910A	LC, FC, or SC connector	External transmission equipment
FE/GE Ethernet cable	RJ45 connector	GE0 port on the BBU3910A	RJ45 connector	External transmission equipment
E1/T1 cable	DB26 waterproof male connector	E1/T1 port on the BBU3910A	Depending on site requirements	External transmission equipment

DCU Cable List

For details about the DCU cables, see *DCU3900 Cables* in DCU3900 Hardware Description.

RHUB Cable List

Table 6-5 lists RHUB cables.

Table 6-5 RHUB cable list

Cable	One End		The Other End	
	Connector	Connected to...	Connector	Connected to...
PGND cable	OT terminal (M4, 6 mm^2 [0.009 $in.^2$])	Ground screws on the RHUB	OT terminal (M6, 6 mm^2 [0.009 $in.^2$])	Ground terminal on the external ground bar
Power Supply Cable	C13 female connector	AC power input socket on the RHUB	3-pin connector	External power input socket
CPRI Optical Fiber	DLC connector	CPRI port on the LBBP, WBBP or UBBP in the BBU	DLC connector	CPRI0 or CPRI1 port on the RHUB
		CPRI port on	DLC connector	CPRI port on the

Copyright © Huawei Technologies Co., Ltd.

Cable	One End		The Other End	
	Connector	Connected to...	Connector	Connected to...
		the LBBP, WBBP or UBBP in the BBU		DCU
		CPRI port on the DCU		CPRI0 or CPRI1 port on the RHUB
		CPRI0 or CPRI1 port on the RHUB	DLC connector	CPRI0 or CPRI1 port on the RHUB
		CPRI port on the LBBP, WBBP or UBBP in the BBU	FC connector, SC connector, or LC connector	ODF
		CPRI port on the DCU		
		CPRI0 or CPRI1 port on the RHUB		
Ethernet Cable	RJ45 connector	CPRI_E0~CPRI_E7 port on the RHUB	RJ45 connector	CPRI_E0~CPRI_E1 port on the pRRU
(Optional) Alarm Cable	RJ45 connector	EXT_ALM port on the RHUB	Bare end	Alarm signal port of the monitored equipment

NOTE

- If one end of the CPRI cable is connected to the DLC connector, the other end connects the BBU, DCU or RHUB through the DLC connector. If one end of the CPRI cable is connected to the ODF adapter, the other end connects the BBU or RHUB through a connector corresponding to the adapter. The connectors include the FC connector, SC connector, and LC connector.
- The Extender can be used to lengthen the distance between the RHUB and the pRRU connected using the Ethernet cable. If the Extender is used, the Ethernet cable is divided into two parts, one between the RHUB and the Extender and the other between the Extender and the pRRU.

pRRU Cable List

Table 6-6 lists pRRU cables.

Table 6-6 List of pRRU3901 cables

Cable	One End	The Other End

Copyright © Huawei Technologies Co., Ltd.

	Connector	Connected to ...	Connector	Connected to ...
Ethernet Cable	RJ45 connector	CPRI_E0~CPRI_E7 port on RHUB	RJ45 connector	CPRI_E0~CPRI_E1 port on pRRU
	RJ45 connector	Transmission port on Access Control(AC)	RJ45 connector	• GE port on pRRU3901 • CPRI_E1 port on pRRU3911/ pRRU3911+ WIFI
(Optional) RF Jumper	SMA straight male connector/Type N male connector	External antenna TX/RX RF port on pRRU	Based on the port model of the antenna system.	Antenna system

NOTE

- When the RHUB and the pRRU connected using the Ethernet cable. If the Extender is used,
- In the indoor scenario, the Ethernet cable is divided into two parts, one between the RHUB and the Extender and the other between the Extender and the pRRU.
- In the outdoor scenario (only pRRU3901 and pRRU3902), the Ethernet cable is divided into two parts, one among RHUB-PoE surge protector 2- PoE surge protector 3-Extender and the other among the Extender- PoE surge protector 4- PoE surge protector 1-pRRU.

6.4.3 Cable Connections

This section describes the cable connections for an RHUB.

Figure 6-28, Figure 6-29 shows the cable connections for an RHUB. The port of ETH are reserved.

Figure 6-28 Cable connections for an RHUB (indoor)

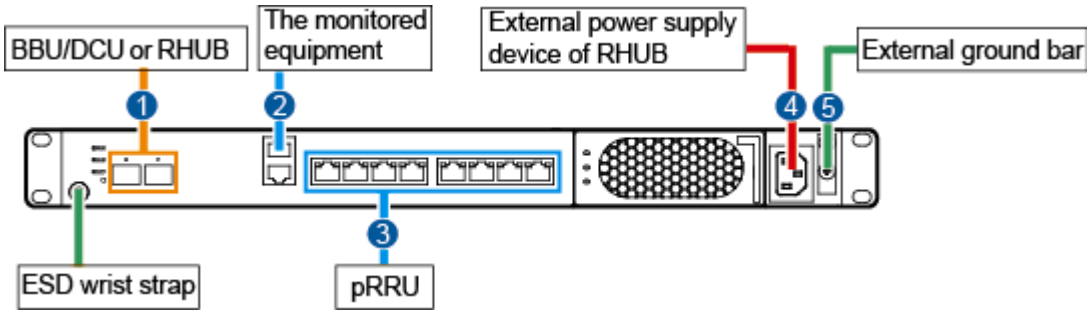

(1) CPRI optical cable (2) Alarm cable (3) Ethernet cable

(4) Power cable (5) PGND cable -

Copyright © Huawei Technologies Co., Ltd.

NOTE

The Extender can be used to lengthen the distance between the RHUB and the pRRU connected using the Ethernet cable. If the Extender is used, the Ethernet cable is divided into two parts, one between the RHUB and the Extender and the other between the Extender and the pRRU.

Figure 6-29 Cable connections for an RHUB (outdoor)

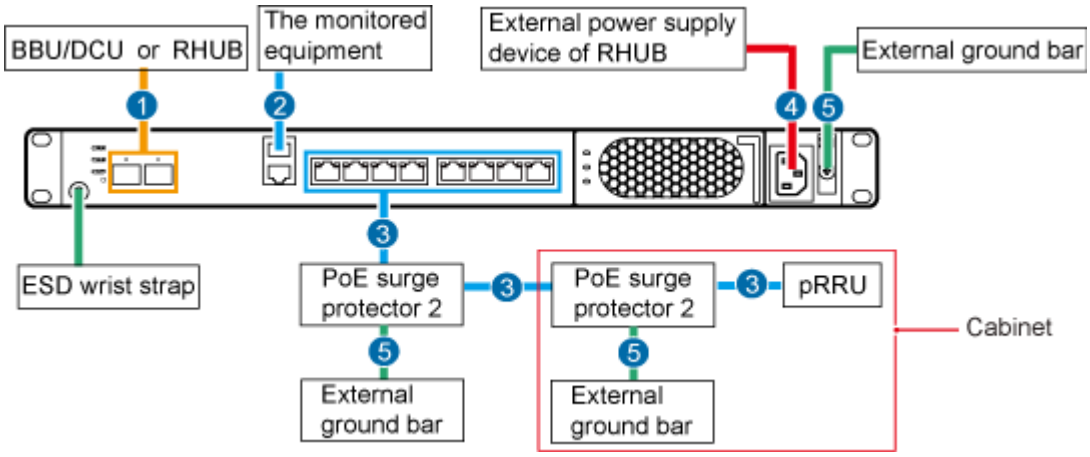

(1) CPRI optical cable	(2) Alarm cable	(3) Ethernet cable
(4) Power cable	(5) PGND cable	-

NOTE

The Extender can be used to lengthen the distance between the RHUB and the pRRU connected using the Ethernet cable. If the Extender is used, the Ethernet cable is divided into two parts, one between the RHUB and the Extender and the other between the Extender and the pRRU.

6.4.4 Cable Installation Process

This section describes the process of installing RHUB cables.

Figure 6-30 shows the RHUB cable installation process.

Copyright © Huawei Technologies Co., Ltd.

Figure 6-30 RHUB cable installation process

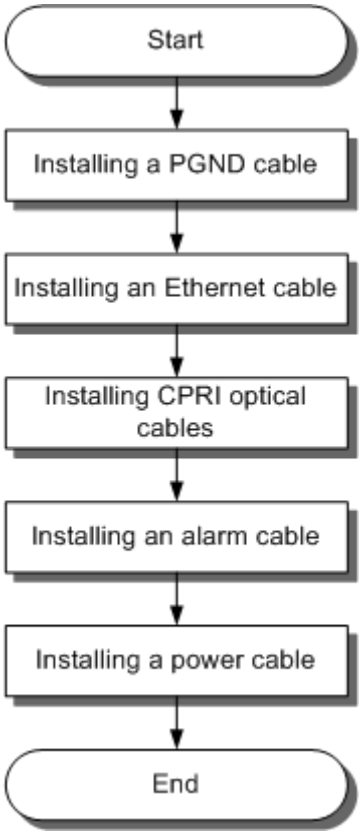

6.4.5 Installing PGND Cable

An RHUB PGND cable ensures proper grounding of an RHUB.

Prerequisites

The OT terminals at both ends of the PGND cable are prepared.

Context

The yellow and green or green PGND cable is a single cable. The cross-sectional area of the PGND cable is 6 mm^2 (0.009 $in.^2$). Both ends of the cable are OT terminals, as shown in Figure 1.

Figure 6-31 Exterior of a PGND cable

(1) OT terminal (6 mm^2 [0.009 $in.^2$], M4) (2) OT terminal (6 mm^2 [0.009 $in.^2$], M6)

Copyright © Huawei Technologies Co., Ltd.

NOTE

- If the PGND cable is provided by the customer, a copper-core cable with a minimum cross-sectional area of 6 mm^2 (0.009 $in.^2$) or 10 AWG is recommended.
- The OT terminals at both ends of the PGND cable are assembled at the site.
- The M6 OT terminal has the default size. You can replace it with another OT terminal of the expected size based on the site requirement.

NOTICE

- Ensure proper grounding of the RHUB using a PGND cable.
- When installing the PGND cable, tightly press the OT terminal in the correct direction, as shown in Figure 6-32.

Figure 6-32 Correct direction of an OT terminal for the PGND cable

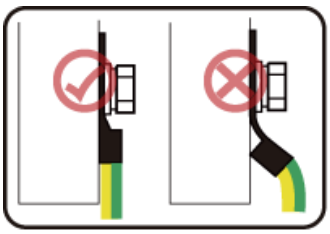

Procedure

Step 1 Route the PGND cable by referring to 6.4.1 Requirements for Cable Layout.

Step 2 Use a torque screwdriver or Phillips screwdriver to secure the M4 OT terminal at one end of the PGND cable to the ground screw on the RHUB panel with a torque of 1.4 N•m. If the OT terminal is a one-hole OT terminal, connect it to the ground screw on the lower part of the RHUB panel, as shown in Figure 6-33.

Copyright © Huawei Technologies Co., Ltd.

Figure 6-33 Installing an RHUB PGND cable

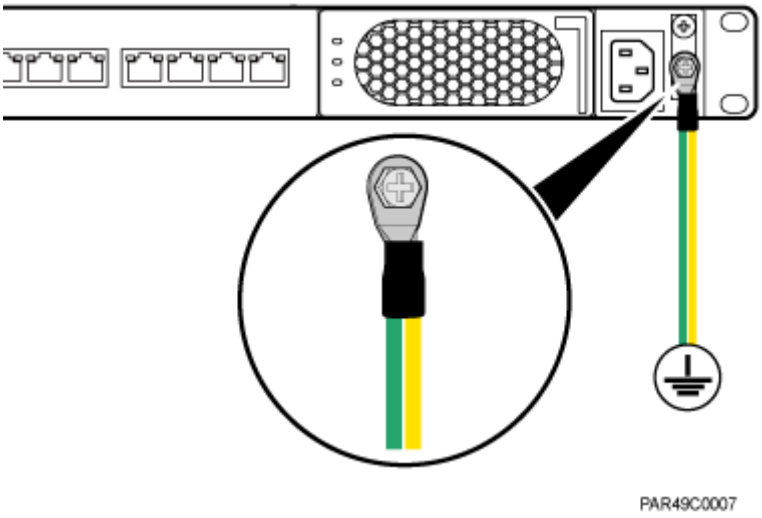

Step 3 Use a torque screwdriver or Phillips screwdriver to secure the M8 OT terminal at one end of the PGND cable to the wiring terminal on the ground bar at the site with a torque of 1.4 N•m.

----End

Follow-up Procedure

1. Route the cable, and then use a cable tie to bind the cable. For details, see 6.4.1 Requirements for Cable Layout.
2. Label the installed cable. For details, see section 15.4 Attaching an L-Shaped Label.

6.4.6 Installing Ethernet Cable

This section describes how to install an Ethernet cable.

Prerequisites

- The Ethernet cable must be of Category 5e (enhanced) or higher. In addition, its cross-sectional area must be 24 AWG or larger and frame spread rating must be CM or higher.
- The Ethernet cables can be straight-through cables or crossover cables.
- With the internal PoE module providing power, the maximum length of an Ethernet cable is 100 m. With the Extender, the distance of the pRRU and RHUB can be extended by the Extender up to a total distance of 200 m.
- Ethernet cables are not delivered, and they must be prepared onsite. You need to use a network cable tester to test the Ethernet cable connection.

Context

The Ethernet cable has the following functions:

- Provides power supply for the pRRU when connected to the CPRI_E0 port on the pRRU.
- Transmits CPRI signals between an RHUB and a pRRU.

Copyright © Huawei Technologies Co., Ltd.

For details about the cable connections in the different scenarios, see 6.4.3 Cable Connections. The Ethernet cable connections between RHUB and pRRUs are the same. The following section describes the connections between RHUB-Extender-pRRU3901 as an example.

In the outdoor scenario, PoE surge protector is needed to provide surge protection for the Ethernet ports. For details about the installation of PoE surge protector, see 12 (Optional) Installing the PoE Surge Protector and Cables.

Procedure

Step 1 Make the Ethernet cables.

1. Assemble an RJ45 connector and an Ethernet cable by following instructions in Assembling the Unshielded RJ45 Connector and the Ethernet Cable of *Installation Reference*.

NOTE
Follow pin assignment instructions described in section Ethernet Cable in *DBS3900 LampSite Hardware Description* to assemble the unshielded RJ45 connector and the Ethernet cable. Otherwise, the transmission signal quality deteriorates and CPRI links may be disconnected.

2. Check whether the made RJ45 connector is qualified by following instructions in Checking the Appearance of Metal Contact Strips.
3. To complete the assembly of the other end, repeat Step 1.1 and Step 1.2.
4. Check whether the touch points on the connectors at both ends are normally conducted and well contacted and whether the connections are correct by following instructions in Testing the Connection of Assembled Cables of *Installation Reference*.

Step 2 Connect the RJ45 connector at the other end of the Ethernet cable to any port ranging from CPRI_E0 to CPRI_E7 on the RHUB panel based on the engineering design.

Step 3 **Optional:** Connect the RJ45 connector at the other end of the Ethernet cable to the output port of the Extender. Then, connect the RJ45 connector at one end of another Ethernet cable to the input port of the Extender.

If the Extender is used, the Ethernet cable is divided into two parts, one between the RHUB and the Extender and the other between the Extender and the pRRU.

Step 4 Remove the dustproof cap of the CPRI_E0 port on the pRRU.

Step 5 Connect the RJ45 connector at one end of the Ethernet cable to the CPRI_E0 port on the pRRU panel, as shown in Figure 6-34, Figure 6-35.

Copyright © Huawei Technologies Co., Ltd.

Figure 6-34 Install an Ethernet cable between an RHUB and a pRRU3901

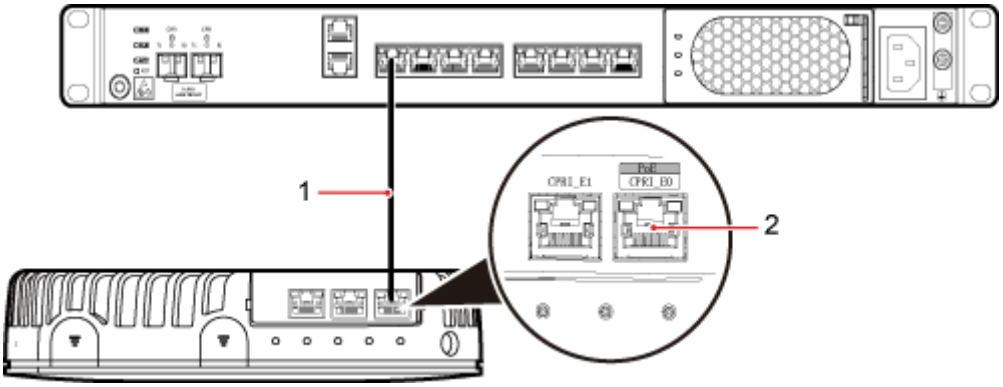

(1) Ethernet cable (2) CPRI_E0 port on the pRRU3901

Figure 6-35 Install an Ethernet cable between an RHUB and a pRRU3902 or pRRU3911/pRRU3911+WIFI

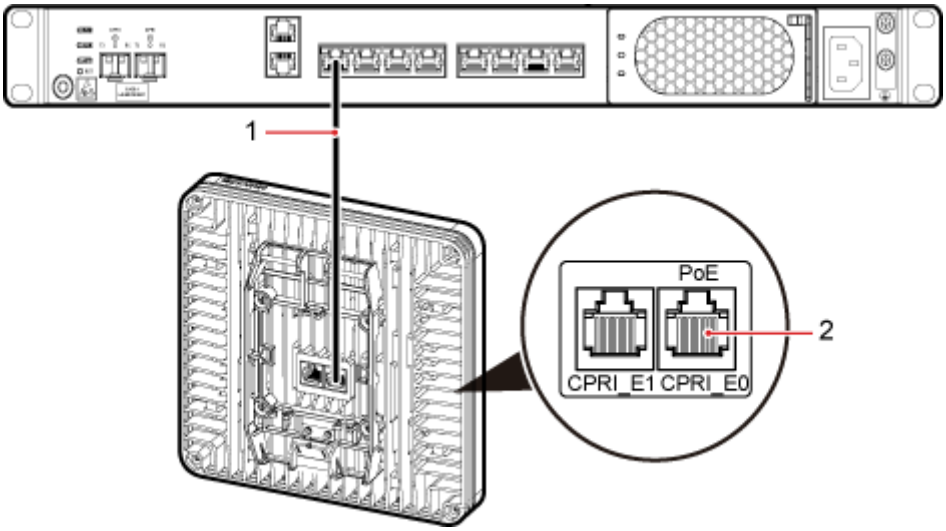

(1) Ethernet cable (2) CPRI_E0 port on the pRRU3902

Copyright © Huawei Technologies Co., Ltd.

Figure 6-36 Install an Ethernet cable between an RHUB and a pRRU3907

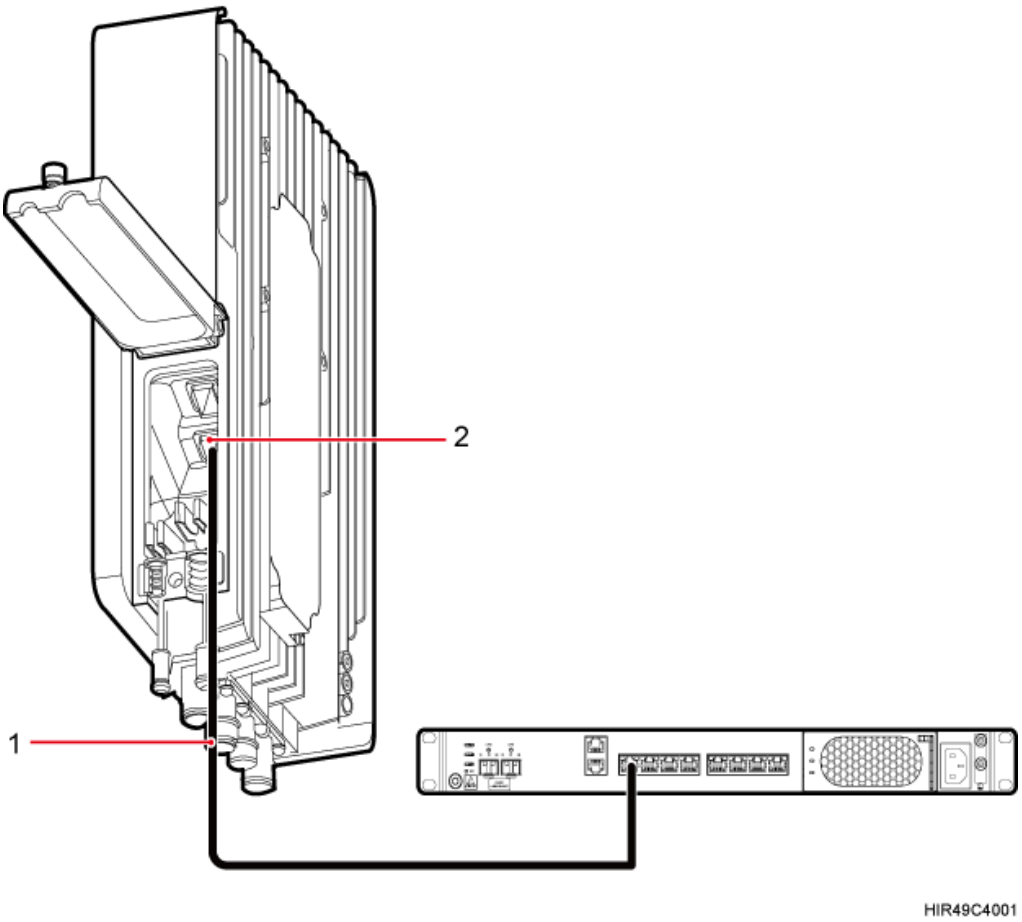

(1) Ethernet cable (2) CPRI_E0 port on the pRRU

----End

Follow-up Procedure

1. Route the cable, and then use a cable tie to bind the cable. For details, see 6.4.1 Requirements for Cable Layout.
2. Label the installed cable. For details, see section 15.4 Attaching an L-Shaped Label.

6.4.7 Installing CRPI Optical Cables

Optical fibers can be used to interconnect BBU and RHUBs, or cascade RHUBs.

Context

- Multi-mode optical modules for CPRI ports are labeled MM and each has a black or gray puller.
- Single-mode optical modules are labeled SM and each has a blue puller.
- For details about the connection of CPRI optical cables, see **CPRI Topology** in *DBS3900 LampSite Technical Description*.

Copyright © Huawei Technologies Co., Ltd.

- An optical module to be installed must match the rate of its corresponding port.

NOTE

The performance of an optical module that is exposed to the air for more than 20 minutes may be abnormal. Therefore, you must insert a fiber optic cable into an unpacked optical module within 20 minutes.

Procedure

Step 1 Install an optical module, as shown in Figure 6-37 and Figure 6-38.

1. Remove the dust-proof cap from the CPRI port on the RHUB panel.
2. Remove the dust-proof cap on the optical module.
3. Lower the puller of the optical module.
4. Insert the optical module into the CPRI port on the RHUB, DCU, BBU or ODF.
5. Raise the puller of the optical module.

Figure 6-37 Removing the dust-proof cap from a port

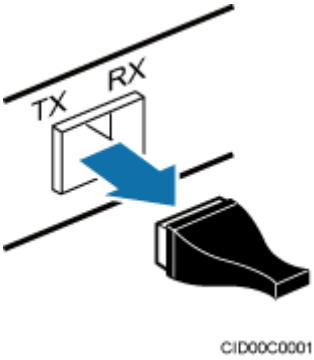

Figure 6-38 Installing an optical module

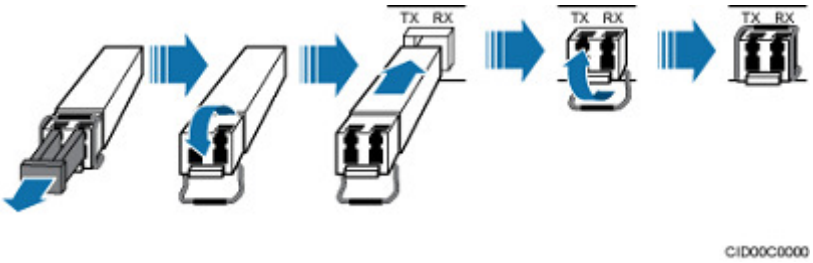

Step 2 Install a CPRI optical cable, as shown in Figure 6-39.

1. Remove the dust-proof cap from the optical cable connector.
2. Install the optical cables by referring to Table 6-7.

Table 6-7 CPRI optical cable connections

One End	The Other End

Copyright © Huawei Technologies Co., Ltd.

Connector	Connected to	Connector	Connected to
DLC connector	BBU/LBBP&WBBP/CPRI port	DLC connector	CPRI0 or CPRI1 port on the RHUB
	BBU/LBBP&WBBP/CPRI port	DLC connector	CPRI port on the DCU
	CPRI port on the DCU		CPRI0 or CPRI1 port on the RHUB
	CPRI0 or CPRI1 port on the RHUB	DLC connector	CPRI0 or CPRI1 port on the RHUB
	BBU/LBBP&WBBP/CPRI port	FC, SC, or LC connector	ODF
	CPRI port on the DCU		
	CPRI0 or CPRI1 port on the RHUB		

NOTE

- In sharing BBUs with Macro Networks scenario, RHUBs share only main control boards with with RF modules on macro base stations, not baseband processing units.
- If one end of the CPRI cable is connected to the DLC connector, the other end connects the BBU or RHUB through the DLC connector. If one end of the CPRI cable is connected to the ODF adapter, the other end connects the BBU/DCU or RHUB through a connector corresponding to the adapter. The connectors include the FC connector, SC connector, and LC connector.
- When connecting the CPRI cable to the TX and RX ports of the optical module through connectors in a cross manner, ensure that one end of a core of the CPRI cable is connected to the TX port and the other end is connected to the RX port. Figure 6-39 shows how to install a CPRI optical cable for connecting the BBU and RHUBs.

Figure 6-39 Installing an CRPI optical cable

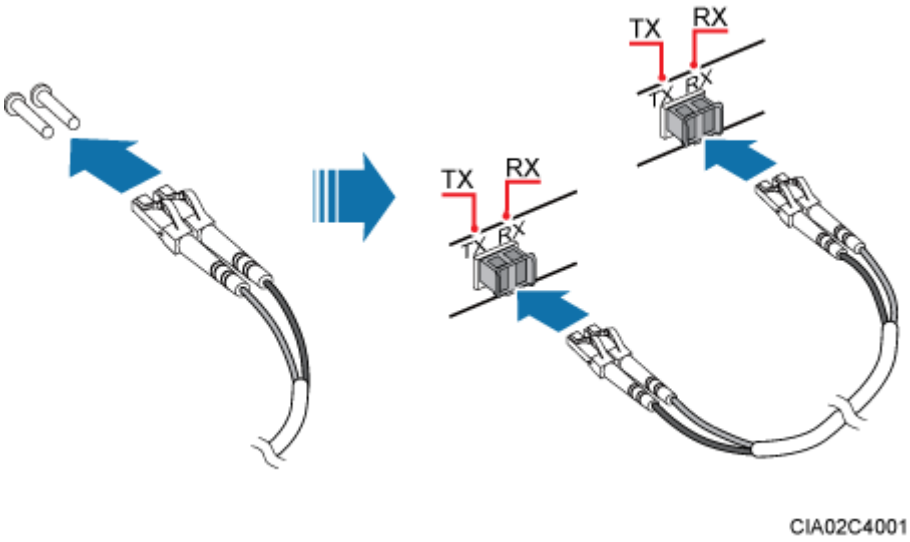

Copyright © Huawei Technologies Co., Ltd.

----End

Follow-up Procedure

1. Route the cable, and then use a cable tie to bind the cable. For details, see 6.4.1 Requirements for Cable Layout.
2. Label the installed cable. For details, see section 15.4 Attaching an L-Shaped Label.

6.4.8 Installing Alarm Cable (Optional)

An RHUB alarm cable transmits dry node alarm signals.

Prerequisites

Connectors for an alarm cable are prepared.

Context

Figure 6-40 shows the exterior of an RHUB alarm cable. 6.4.2 Cable List shows the installation position on both ends of the RHUB cable.

Figure 6-40 RHUB alarm cable

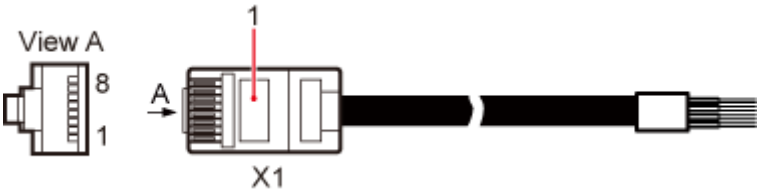

Procedure

Step 1 Connect the RJ45 connector on one end of the alarm cable to the EXT_ALM port on the RHUB.

Step 2 Connect the other end of the alarm cable to the alarm cable port on the device to be monitored.

----End

Follow-up Procedure

1. Route the cable, and then use a cable tie to bind the cable. For details, see 6.4.1 Requirements for Cable Layout.
2. Label the installed cable. For details, see section 15.4 Attaching an L-Shaped Label.

6.4.9 Installing Power Cable

The RHUB power cable provides 110 V AC/220 V AC power supply for the RHUB.

Copyright © Huawei Technologies Co., Ltd.

Context

Table 6-8 lists the recommended configurations of upper-level circuit breakers and power cables for a RHUB.

Table 6-8 Configurations of upper-level circuit breakers and power cables

Power Supply	Upper-level AC Circuit Breaker (For a single RHUB)	Cross-Sectional Area of the Input Power Cable
220 V AC single-phase	≥ 6 A	1 mm^2
110 V AC single-phase	≥ 10 A	1.25 mm^2

Procedure

Step 1 Route the power cable by referring to 6.4.1 Requirements for Cable Layout.

Step 2 Connect the power connector on the X1 end to the AC power input port on the RHUB panel, as shown in Figure 6-41.

Step 3 Connect the power connector on the X2 end to the external power supply port, as shown in Figure 6-41.

Figure 6-41 Installing an RHUB power cable

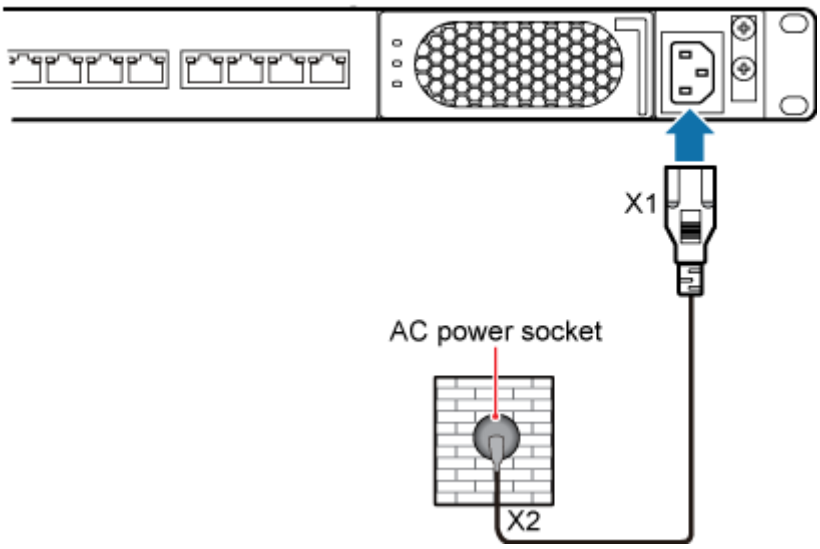

----End

Follow-up Procedure

1. Route the cable, and then use a cable tie to bind the cable. For details, see 6.4.1 Requirements for Cable Layout.

Copyright © Huawei Technologies Co., Ltd.

2. Label the installed cable. For details, see section 15.4 Attaching an L-Shaped Label.

6.5 Checking the RHUB Hardware Installation

After an RHUB is installed, check the installation of hardware including the devices and related cables.

Table 6-9 lists the hardware installation checking items.

Table 6-9 Hardware installation checking list

No.	Item
1	The position for each device conforms to the engineering design and meets the space requirement.
2	Ensure that the RHUB is properly installed.
3	The surface of the RHUB is neat and clean. The external paint is intact. The labels, tags, and nameplates are correct, legible, and complete.

Table 6-10 lists the checking list of the power cable and PGND cable connections.

Table 6-10 Checklist for power cable and PGND cable connections

No.	Item
1	The power cables and PGND cables comply with the requirements of local regulations.
2	The power cables or the PGND cables are not inversely connected or short-circuited.
3	The power cables and PGND cables are bound separately from other cables.
4	Labels are attached to both ends of the power cables, PGND cables, optical fibers, and Ethernet cables.
5	The power cables and PGND cables are intact.
6	The power cables and PGND cables have no weld nugget.
7	No breaking device such as a switch or fuse lies in the electric connection of the grounding system.
8	The redundant part of PGND cable is stripped off.
9	The lugs at both ends of the power cable or PGND cable are securely soldered or crimped.
10	The flat washers and spring washers are fixed securely and closely at all the wiring terminals.
11	The work GND cable and PGND cable of the BTS share a group of grounding conductors with the lightning and GND cables of the building.

Copyright © Huawei Technologies Co., Ltd.

Table 6-11 lists the check items of the signal cable connection.

Table 6-11 Checklist for the signal cable connection

No.	Item
1	The connectors of the signal cables must securely connected.
2	The connectors of the signal cables are intact.
3	The signal cables are intact.
4	The cable ties are evenly spaced. The signal cables are bound neatly with cable ties to proper tightness, and arranged at even intervals in the same direction.
5	The extra length of the cable ties is cut and removed. The cut surfaces of the indoor cables are smooth and have no sharp edges.
6	The cable layout facilitates maintenance and expansion.
7	Correct and clear labels are attached to both ends of the signal cables.
8	The distance between the bundled fiber tails and the RHUB panel is less than 70 mm.

Table 6-12 lists the checking items for other cable connections.

Table 6-12 Checklist for other cable connections

No.	Item
1	The connectors of the other cables must securely connected.
2	Labels on the cables are legible and bound based on the engineering requirements. The cables must be bound tightly and neatly. The sheaths of the cables must not be damaged.
3	Positions for routing the cables must meet requirements of the engineering design.

6.6 Power-on Check on an RHUB

This section describes the power-on check on the RHUB after the RHUB hardware is installed and checked.

Context

After the RHUB and pRRUs are installed and connected to each other, power on them no matter whether the BBU is installed.

Copyright © Huawei Technologies Co., Ltd.

DANGER

Power-on check involves high-voltage operation. Be cautious when conducting the power-on check. Any direct contact with the input voltage or indirect contact through damp objects might endanger your life.

Procedure

Step 1 Measure the RHUB earth resistance.

If...	Then...
The RHUB earth resistance is less than 10 ohms	Go to Step 2.
The RHUB earth resistance is equal to or larger than 10 ohms	Find out the cause and ensure that the resistance meets requirement. Then, go to Step 2.

Step 2 Measure the voltage of the RHUB.

If...	Then...
The external power supply ranges from 100 V AC to 240 V AC	Go to Step 3.
The external power supply does not range from 100 V AC to 240 V AC	Find out the cause and ensure that the resistance meets requirement. Then, go to Step 3.

Step 3 Power on the RHUB. Wait 3 to 5 minutes, check the status of the RUN indicator of the RHUB after the RHUB runs properly.

If the Status of the RUN Indicator...	It Indicates that...	Then...
Steady on	The power supply is normal while the board is faulty.	Power off the RHUB, and power on it again after rectifying the board fault.
Steady off	There is no power input or the board is faulty.	Power off the RHUB, and check the power input again. Rectify the board faulty and power on the RHUB again if the power input is normal.
On for 1s and off for 1s	The devices work properly.	End the operation.
On for 0.125s and off for 0.125s	The board software is being uploaded.	Power off the RHUB if the uploading is not finished in 5 minutes, and check whether the configuration file is correct. Power on the RHUB again after the fault is rectified.

Copyright © Huawei Technologies Co., Ltd.

NOTE

If an RHUB is not connected to any BBU, the RHUB is considered normally powered on when any indicator on the RHUB is on.

----End

Copyright © Huawei Technologies Co., Ltd.

7 Installing a pRRU3901

About This Chapter

This chapter describes the pRRU3901 installation process. The pRRU3901 can have two transmission ports (plus PWR port) or three transmission ports (plus PWR port or no PWR port). Unless otherwise specified, this document uses the pRRU3901 with three transmission ports plus no PWR port as an example.

7.1 Information About the Installation

This section describes the information that you must be familiar with before installing a pRRU3901, including the pRRU3901 product family, installation scenarios, installation space and environment requirements.

7.2 Obtaining the MAC Address (Optional)

Before installing a pRRU3901, record the media access control (MAC) address, which will be used during pRRU3901 commissioning. This section applies only when a pRRU3901 with three transmission ports is configured with a Wi-Fi daughter board.

7.3 Installation Process

This section describes the pRRU3901 installation process, which involves installing a pRRU3901, and cables, checking the pRRU3901 hardware installation, and powering on the pRRU3901.

7.4 Installing a pRRU3901

This section describes the pRRU3901 installation process. A pRRU3901 can be installed on a wall, ceiling, indoor metal pole, or standard keel, but not on an aluminum panel or a non-standard keel.

7.5 Installing pRRU3901 Cables

This section describes the procedure of installing the pRRU3901 cables.

7.6 Checking the pRRU3901 Hardware Installation

pRRU3901 hardware installation checking includes hardware and cable installation checking.

7.7 Powering on the pRRU3901

This section describes the power-on check on the pRRU3901 after the pRRU3901 hardware is installed and checked.

Copyright © Huawei Technologies Co., Ltd.

7.1 Information About the Installation

This section describes the information that you must be familiar with before installing a pRRU3901, including the pRRU3901 product family, installation scenarios, installation space and environment requirements.

7.1.1 Product Family

This chapter describes the configurations and functions of the pRRU3901 components.

Table 7-1 lists the pRRU3901 product family.

Table 7-1 pRRU3901 product family

Category	Equipment	Optional or Mandatory	Quantity	Function
Main equipment	pRRU3901	Mandatory	1	Processes the radio frequency signals.
	External antenna	Optional	2	Provides external antennas for the pRRU3901. **NOTE** Configure two external antennas for each RF daughter board.
Auxiliary device	Mounting kits	Mandatory	1	Supports the pRRU3901 installation on a wall, pole, ceiling, or keel. The mounting kits vary with the pRRU3901 installation mode.
	Cabinet	Optional	• None and one Extender is needed • Yes and two Extenders are needed	Install the pRRU3901 and Extender in the outdoor scenario.
	Extender	Optional	1 or 2 **NOTE** The quantity depends on the number of Ethernet cables in use.	Extends the distance between the pRRU3901 and RHUB.

7.1.2 Installation Scenario

The pRRU3901 can be installed on a wall, ceiling, pole, or keel. The following table describes the installation in different scenarios.

Copyright © Huawei Technologies Co., Ltd.

Installing a pRRU3901 on a wall

NOTE

- The pRRU3901 must keep a minimum of 0.5 m away from the power equipment with interference, and keep a minimum of 2 m away from the source with radiation.
- The pRRU3901 must keep away from a metal wall to avoid the impact on the antenna performance.

When a pRRU3901 is installed on a wall, installation modes vary with the quality of wall, as shown in Table 7-2.

Table 7-2 Wall-mounted suggestion

Installation Mode	Requirements	Mounting Brackets	Installation Diagram
Installing the pRRU3901 on a wall by drilling holes For details, see 7.4.2 Installing a pRRU3901 on a Wall.	• The wall can bear a load at least four times the weight of a pRRU3901. • The screws must be tightened with a torque of 10 N·m. This ensures the screws work properly and the wall remains intact without cracks in it.	1. Plate 2. Screw (M6X50) 3. Plastic expansion sleeve 4. Flat washer 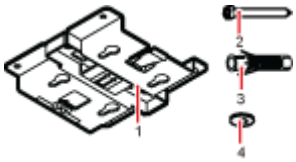	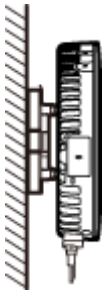
Installing the pRRU on a wall using a V clamp through an attachment plate For details, see 7.4.5 Installing a pRRU3901 on a Plate.	• The wall can bear a load at least four times the weight of a pRRU3901. • The thickness of the wall is less than 80 mm.	1. Plate 2. V clamp 3. Bolt (M6X80) 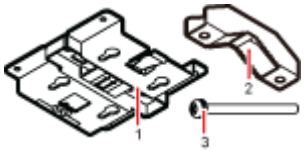	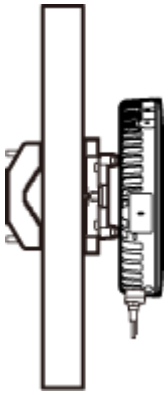
Installing the pRRU3901 on a wall using a plate on a metal wall	The wall cannot bear a load at least four times the weight of the pRRU. For example, EPS walls, MDF walls, or walls cannot be drilled.	The plate is prepared by customers.	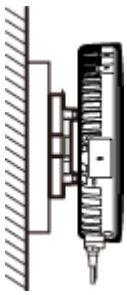

Copyright © Huawei Technologies Co., Ltd.

Installing a pRRU3901 on a ceiling

When a pRRU3901 is installed on a ceiling, installation modes vary with the quality of the ceiling, as shown in Table 7-3.

Table 7-3 Ceiling-mounted suggestion

Installation Mode	Requirements	Mounting Brackets	Installation Diagram
Installing the pRRU3901 on a ceiling by drilling holes For details, see 7.4.3 Installing a pRRU3901 on a Ceiling.	• The ceiling, such as a concrete ceiling, can bear a load at least four times the weight of the pRRU3901. • The screws must be tightened with a torque of 10 N·m. This ensures the screws work properly and the ceiling remains intact without cracks in it.	1. Plate 2. Screw (M6X50) 3. Plastic expansion sleeve 4. Flat washer 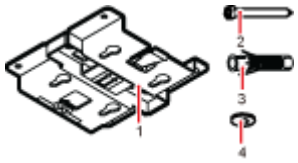	
Installing the pRRU3901 on a ceiling using a V clamp through an attachment plate For details, see 7.4.5 Installing a pRRU3901 on a Plate.	• The ceiling, such as a concrete ceiling, can bear a load at least four times the weight of the pRRU3901. • The thickness of the ceiling is less than 80 mm.	1. Plate 2. V clamp 3. Bolt (M6X80) 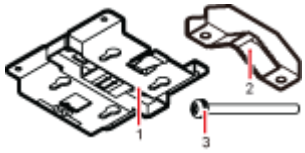	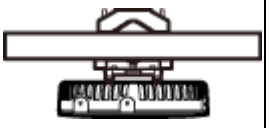
Installing the pRRU3901 on a pole For details, see 7.4.4 Installing a pRRU3901 on a Pole.	A pole under the ceiling can bear a load at least four times the weight of the pRRU3901.	For details, see Table 7-4.	For details, see Table 7-4.
Installing the pRRU3901 on a keel For details, see 7.4.6 Installing a pRRU3901	A keel under the ceiling can bear a load at least four times the weight of the pRRU3901.	For details, see Table 7-5.	For details, see Table 7-5.

Copyright © Huawei Technologies Co., Ltd.

Installation Mode	Requirements	Mounting Brackets	Installation Diagram
on a Keel.			

Installing the pRRU3901 on a pole

When a pRRU3901 is installed on a pole, installation modes vary with the diameter of the pole, as shown in Table 7-4.

Table 7-4 Pole-mounted suggestion

Installation Mode	Requirements	Mounting Brackets	Installation Diagram
Installing the pRRU3901 on a pole For details, see 7.4.4 Installing a pRRU3901 on a Pole.	The diameter of the pole ranges from 30 mm to 70 mm.	1. Plate 2. V clamp 3. Bolt (M6X80) 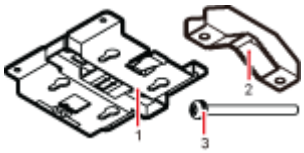	
	The diameter of the pole ranges from 70 mm to 110 mm.	1. Plate 2. Hose clamp, which is prepared by the customer 	

Installing the pRRU3901 on a keel

The pRRU3901 can be installed on a keel of U-shape, T-shape, or H-shape. For the keels of other shapes, they are determined based on the onsite requirements.

Table 7-5 Keel-mounted installation suggestion

Installation Mode	Requirements	Mounting Brackets	Installation Diagram
Installing the pRRU3901 on a keel For details, see 7.4.6 Installing a pRRU3901 on a Keel.	The keel is in U-shape, T-shape, H-shape, or other shapes.	1. Plate 2. V clamp 3. Bolt (M6X80) 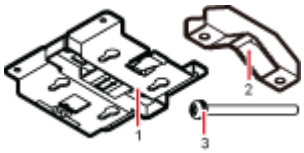	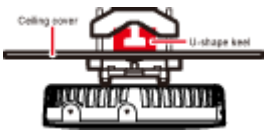 shows the pRRU installed on a U-shaped keel.

Copyright © Huawei Technologies Co., Ltd.

pRRU3901 cabinet

In the outdoor scenario, pRRU3901 should be installed in the cabinet.

Table 7-6 Cabinet installation suggestion

Installation Mode	Requirements	Mounting Brackets	Installation Diagram
Installing the cabinet For details, see7.4.7 Installing the Cabinet	Remove the housing before installing a pRRU3901 in the cabinet.	1. Plate 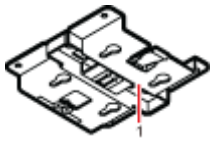	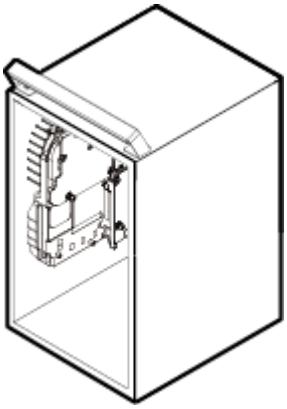

7.1.3 Space Requirements

This chapter describes the space requirements of the pRRU3901.

When the pRRU3901 is installed on a wall, ceiling, pole or keel, the minimum space is required for easy cabling and O&M. Based on the engineering practice, the recommendation for the installation space is provided.

NOTE

During installation, a minimum clearance of 2 m must be reserved between the pRRU3901 working on the 2.6 GHz band and the Wi-Fi module if they need to process services concurrently.

Figure 7-1 shows the recommended space requirements of the pRRU3901.

Copyright © Huawei Technologies Co., Ltd.

Figure 7-1 Recommended space requirements of the pRRU3901

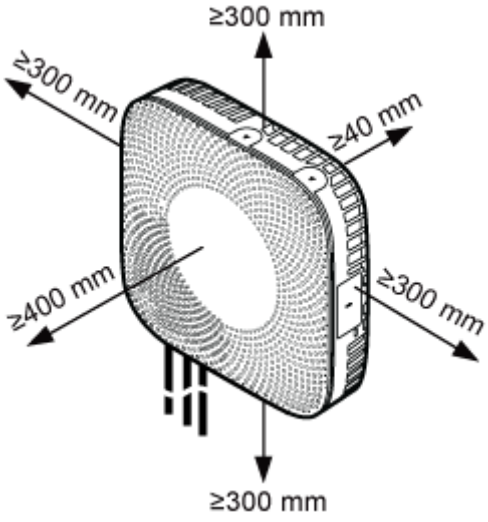

The recommended space for installing a single pRRU3901 is described as follows:

- At least 300 mm above the pRRU3901 is reserved for maintenance.
- At least 300 mm under the pRRU3901 is reserved for cabling.
- At least 300 mm on the left of the pRRU3901 is reserved for maintenance.
- At least 300 mm on the right of the pRRU3901 is reserved for maintenance.
- At least 400 mm in front of the pRRU3901 is reserved for maintenance
- At least 40 mm on the back of the pRRU3901 is reserved for ventilation.

In the outdoor scenario, there is no space requirement for the pRRU3901 installing in the cabinet.

7.1.4 Installation Environment Requirements

The installation environment of a pRRU3901 involves the running environment specifications for the pRRU3901 and other specifications.

Running Environment Specifications

Table 7-7 shows the environment specifications for the pRRU3901 installed indoors.

Table 7-7 pRRU3901 environment specifications

Specifications	Condition	Remarks
Operating temperature	• Indoor: - 5 °C to + 40 °C • Outdoor: - 20 °C to + 40 °C	-
Relative humidity	5% RH to 95% RH	-
Altitude	- 60 m to + 1800 m	Works properly.

Copyright © Huawei Technologies Co., Ltd.

Specifications	Condition	Remarks
	1800 m to 4000 m	Above the 1800 m altitude, the maximum operating temperature decreases by 1 °C each time the altitude increases by 220 m.

Other Running Environment Specifications

- The pRRU3901 cannot be installed at an air outlet of the heat dissipation box of an air conditioner or other heat-generating appliances.
- The pRRU3901 cannot be installed near a strong heat source.
- The pRRU3901 cannot be installed in a position with water dripping, such as outdoor equipment of air conditioners, pipe, and leaking or dripping roofs.
- The installation position must be far from rains. If the pRRU3901 is installed on a wall, there must be no window on either side of the wall.
- The installation position must be far away from high voltage, highly corrosive devices, flammable or explosive substances, and electromagnetic interference such as power stations, high-voltage substations, and wired TV towers.
- The pRRU3901 must be installed in a dry, ventilating, and dust-proof place.
- If the pRRU3901 is installed in parking areas or basements, the installation position must be well-ventilated.

7.2 Obtaining the MAC Address (Optional)

Before installing a pRRU3901, record the media access control (MAC) address, which will be used during pRRU3901 commissioning. This section applies only when a pRRU3901 with three transmission ports is configured with a Wi-Fi daughter board.

Context

The MAC address indicates the IP address through which a device can be reached.

Procedure

Step 1 Remove the backup WIFI MAC label from the front housing of the pRRU3901 and keep them secure, as shown in Figure 7-2.

NOTE

- Do not remove the WIFI MAC label on the side of the pRRU3901 housing.
- Before removing the backup WIFI MAC label, photograph it.

Copyright © Huawei Technologies Co., Ltd.

Figure 7-2 Removing backup WIFI MAC label

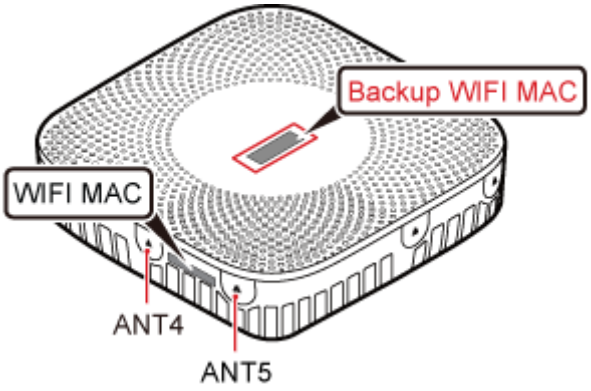

Step 2 Save the MAC according to 15.1 MAC Collection Template, and report it to the pRRU3901 commissioning personnel.

----End

7.3 Installation Process

This section describes the pRRU3901 installation process, which involves installing a pRRU3901, and cables, checking the pRRU3901 hardware installation, and powering on the pRRU3901.

Figure 7-3 shows the pRRU3901 installation process.

Copyright © Huawei Technologies Co., Ltd.

Figure 7-3 pRRU3901 installation process

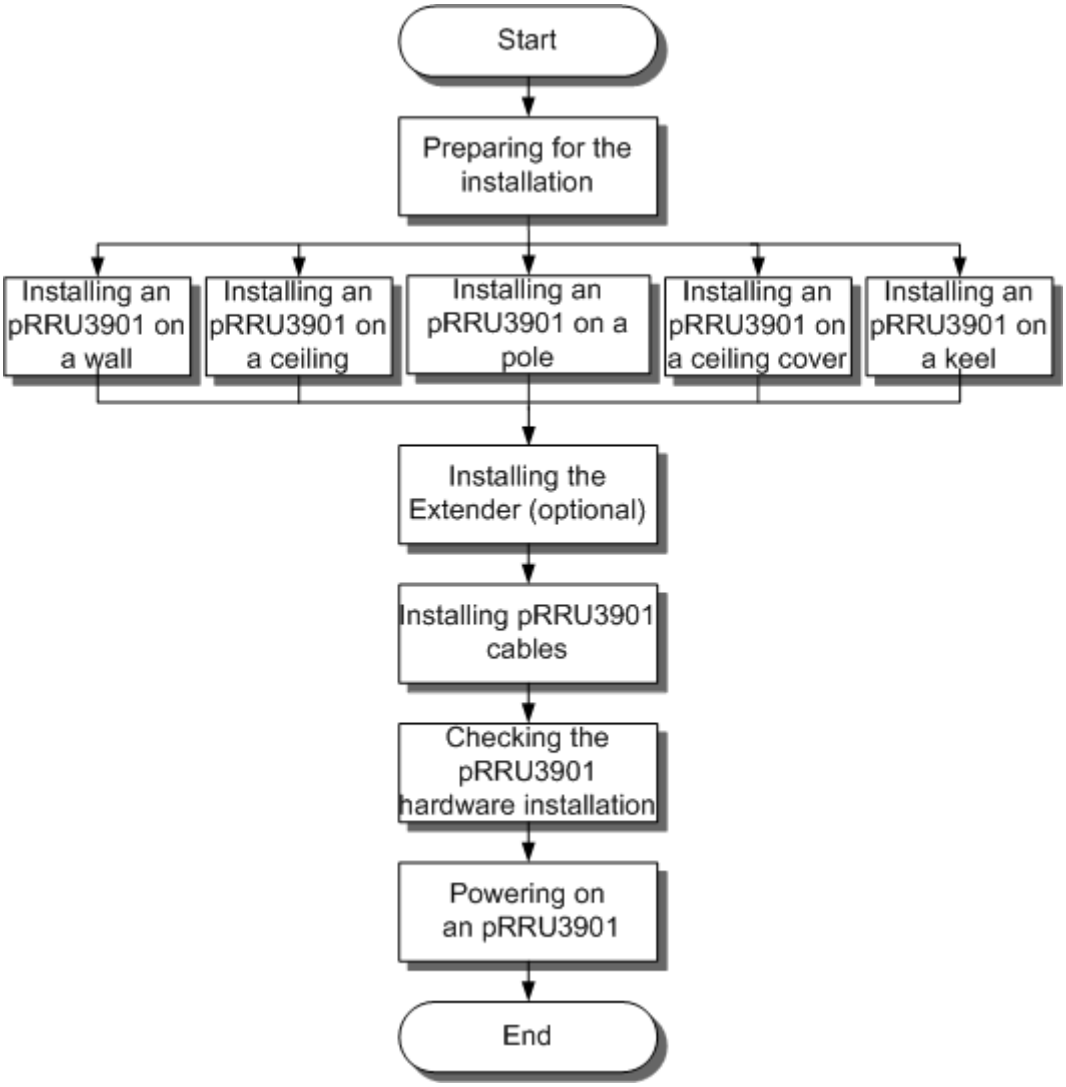

7.4 Installing a pRRU3901

This section describes the pRRU3901 installation process. A pRRU3901 can be installed on a wall, ceiling, indoor metal pole, or standard keel, but not on an aluminum panel or a non-standard keel.

NOTE

Note the following when installing the pRRU3901:

- The pRRU3901 cannot be grounded. If the pRRU3901 is grounded but the RHUB connected to this pRRU3901 is not, the pRRU3901 may fail to be powered on.
- A minimum distance of 50 cm must be reserved between the pRRU3901 and the incandescent lamp.
- The installation spacing between the pRRU3901 and the temperature sensor must be greater than 50 cm.
- It is good practice to install the pRRU3901 on materials that can tolerate a temperature higher than 65°C and have an ignition point higher than 70°C.

Copyright © Huawei Technologies Co., Ltd.

7.4.1 pRRU3901 Mounting Kits

This section describes the pRRU3901 mounting kits.

Figure 7-4 shows the exterior of the pRRU3901 mounting kits.

Figure 7-4 pRRU3901 mounting kits

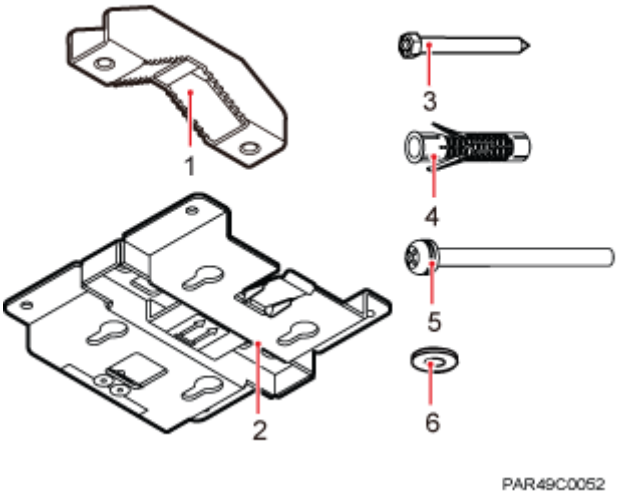

(1) V clamp	(2) Mounting bracket	(3) Screw (M6x50)
(4) Plastic expansion sleeve	(5) Bolt (M6x80)	(6) Flat washer

The following figure shows the specifications of the mounting bracket.

Copyright © Huawei Technologies Co., Ltd.

Figure 7-5 Mounting bracket specifications

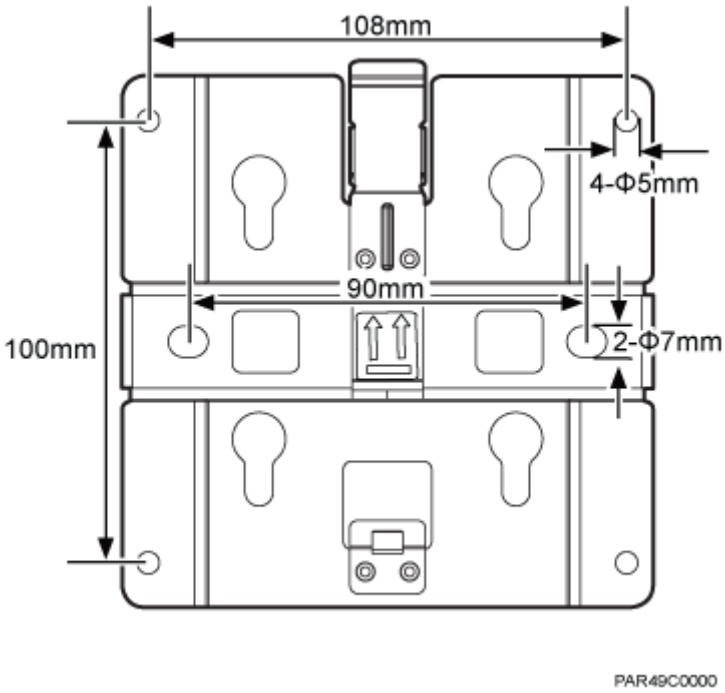

7.4.2 Installing a pRRU3901 on a Wall

This section describes how to install a pRRU3901 on an indoor wall. If a wall indoors has adequate load bearing capacity and installation space, it is good practice to install the pRRU3901 on the wall. If the wall does not have adequate load bearing capacity, choose an installation mode based on site requirements.

Context

NOTICE

This section describes only the wall-mounted installation in which mounting kits are directly installed on the wall without auxiliary devices. The procedure for other wall-mounted installation modes is similar.

Procedure

Step 1 Determine the position for installing the pRRU3901 based on the construction blueprint and the clearance requirements.

NOTE

For details about the clearance requirements, see 7.1.3 Space Requirements.

Step 2 Place the mounting bracket in the installation position against the wall. Then, level the mounting bracket and use a marker to mark two anchor points. See Figure 7-6.

Copyright © Huawei Technologies Co., Ltd.

Figure 7-6 Anchor points on the pRRU3901 mounting bracket (unit: mm)

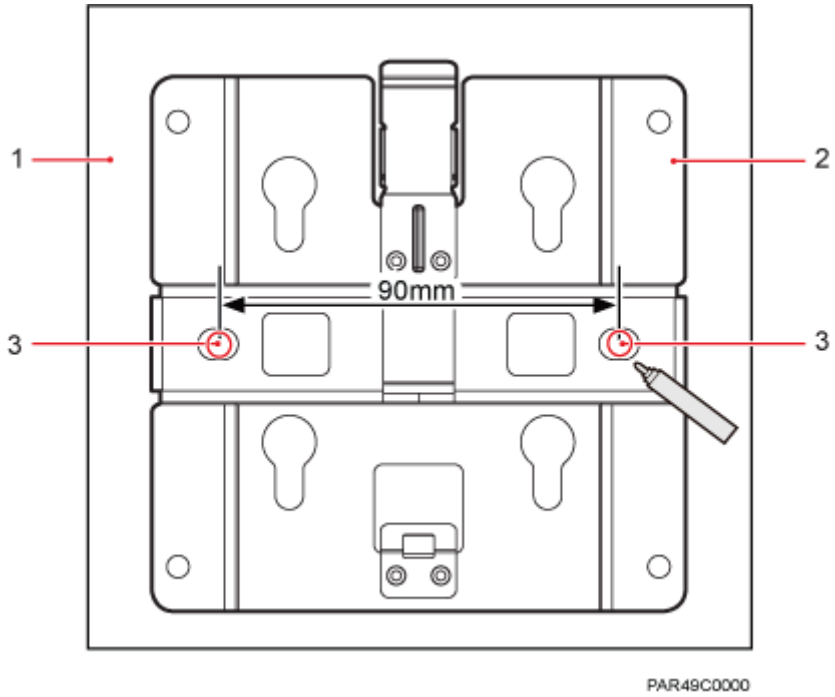

(1) Wall (2) Mounting bracket (3) Anchor point

CAUTION

To prevent inhalation or eye contact with dust, take adequate preventive measures when drilling holes.

Step 3 Use a hammer drill with φ8 bore to drill holes at the marked anchor points, as shown in Figure 7-7. Use a vacuum cleaner to clean the dust inside and around the holes and measure the distance between them. If they are inaccurately positioned, re-measure and re-drill the holes. Then, use a rubber mallet to hit a plastic expansion sleeve into each hole.

Copyright © Huawei Technologies Co., Ltd.

Figure 7-7 Drilling holes and installing expansion bolts

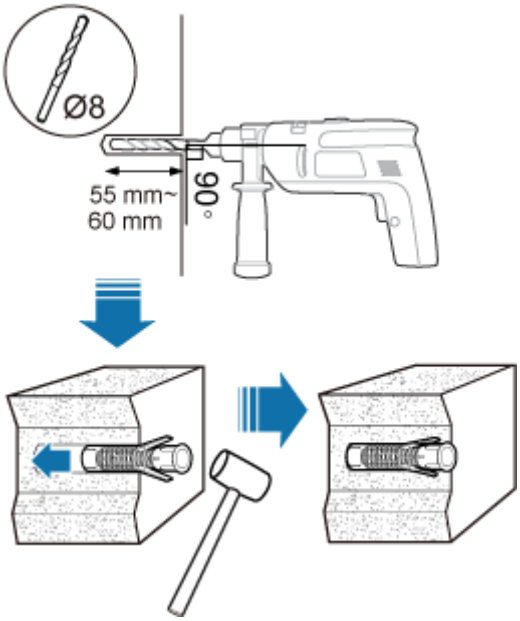

Step 4 Lead the M6x50 screws through the washers, and then through the drilling holes on the mounting bracket to the plastic expansion sleeves, and torque the screws to 5 N•m, as shown in Figure 7-8.

Copyright © Huawei Technologies Co., Ltd.

Figure 7-8 Installing the mounting bracket

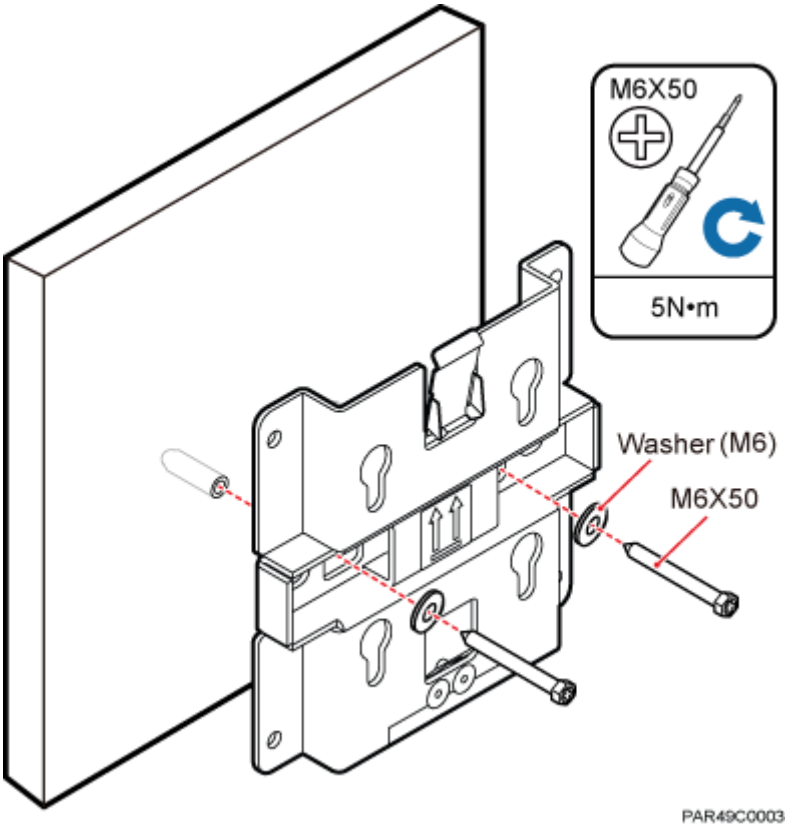

NOTE

If the screws cannot be tightened using a Phillips screwdriver, use a hex key or an electric screwdriver to assist the installation.

Step 5 Fit the four hooks of the pRRU3901 into the mounting holes on the mounting bracket and then press the pRRU3901 downwards until a click is heard. See Figure 7-9.

NOTE

It is good practice to perform the installation from the side view to promptly align the hooks with the mounting holes.

Copyright © Huawei Technologies Co., Ltd.

Figure 7-9 Installing the pRRU3901 on a wall

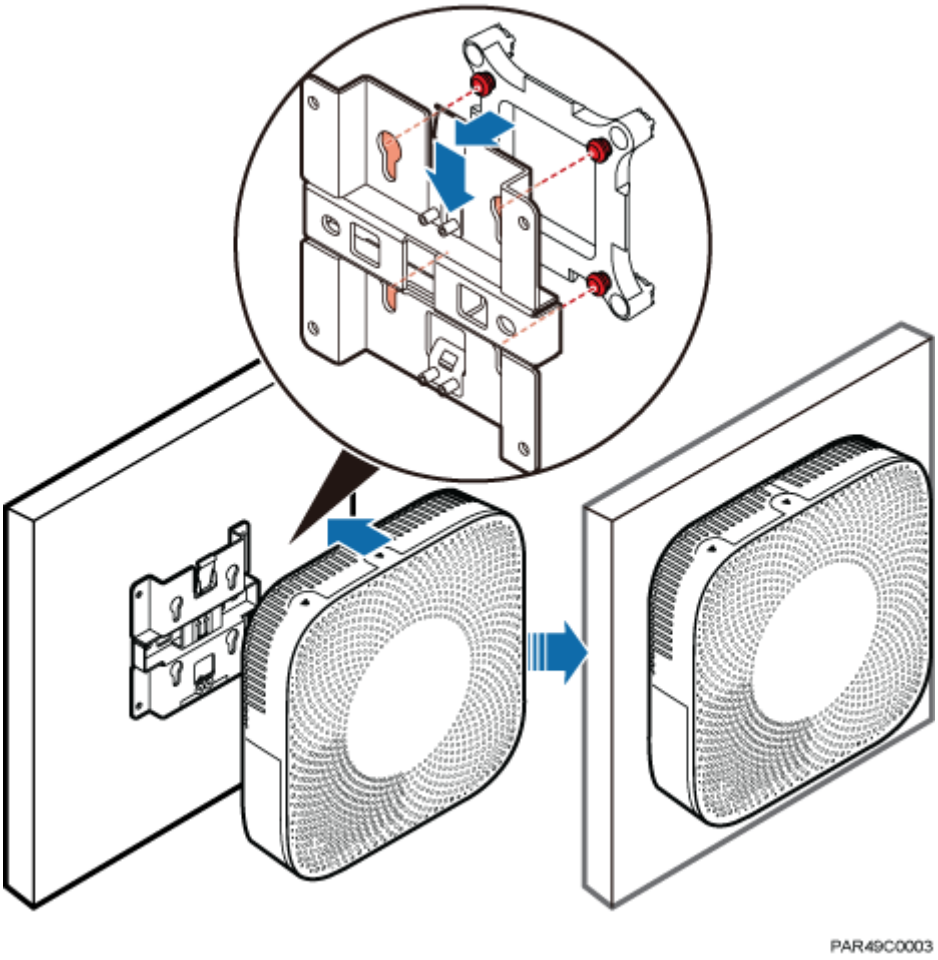

----End

7.4.3 Installing a pRRU3901 on a Ceiling

This section describes how to install a pRRU3901 on the ceiling, such as the concrete ceiling, when the ceiling has adequate load bearing capacity and installation space.

Context

NOTICE

If the pRRU3901 is installed on a ceiling, the temperature of the ceiling may increase by a maximum of 30 degrees. Therefore, whether a pRRU3901 can be installed on a ceiling depends on the ceiling material.

Copyright © Huawei Technologies Co., Ltd.

Procedure

Step 1 Determine the position for installing the pRRU3901 based on the construction blueprint and the clearance requirements.

NOTE
For details about the clearance requirements, see 7.1.3 Space Requirements.

Step 2 Place the mounting bracket in the installation position against the ceiling. Then, level the mounting bracket and use a marker to mark two anchor points. See Figure 7-10.

Figure 7-10 Anchor points on the pRRU3901 mounting bracket (unit: mm)

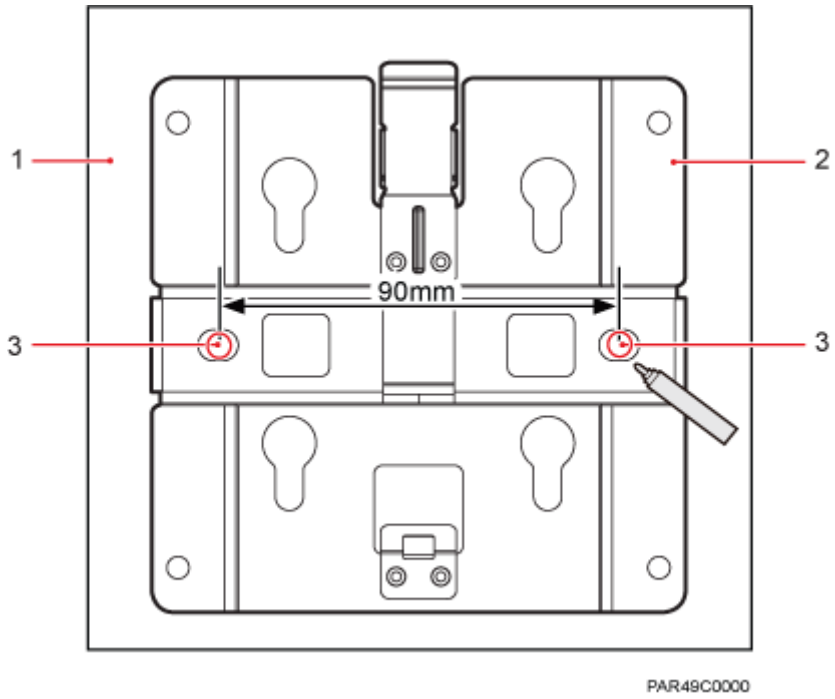

(1) Ceiling (2) Mounting bracket (3) Anchor point

CAUTION
To prevent inhalation or eye contact with dust, take adequate preventive measures when drilling holes.

Step 3 Use a hammer drill with φ8 bore to drill holes at the marked anchor points, as shown in Figure 7-11. Use a vacuum cleaner to clean the dust inside and around the holes and measure the distance between them. If they are inaccurately positioned, re-measure and re-drill the holes. Then, use a rubber mallet to hit a plastic expansion sleeve into each hole.

Copyright © Huawei Technologies Co., Ltd.

Figure 7-11 Drilling holes and installing expansion bolts

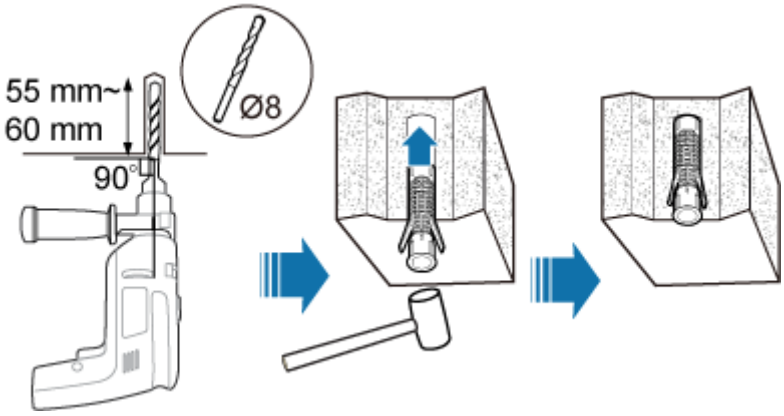

Step 4 Lead the M6x50 screws through the washers, and then through the drilling holes on the mounting bracket to the plastic expansion sleeves, and use a torque screwdriver to torque the screws to 5 N•m, as shown in Figure 7-12.

Figure 7-12 Installing the mounting bracket

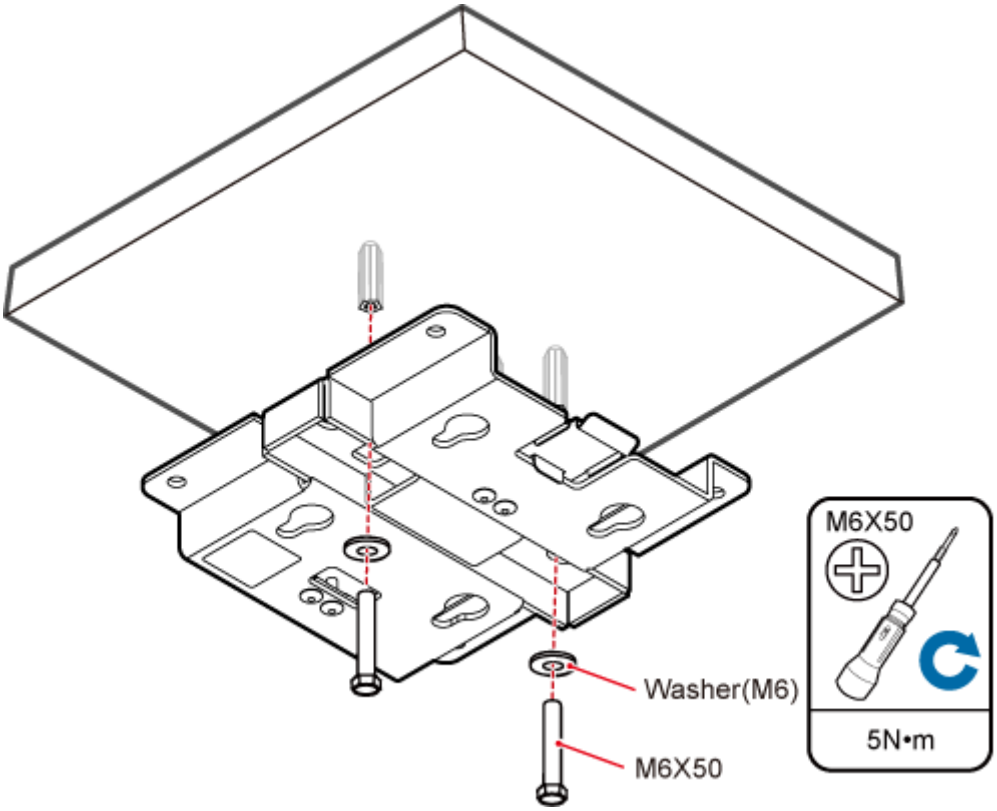

NOTE

If the screws cannot be tightened using a Phillips screwdriver, use a hex key or an electric screwdriver to assist the installation.

Step 5 Fit the four hooks of the pRRU3901 into the mounting holes on the mounting bracket and then press the pRRU3901 downwards until a click is heard. See Figure 7-13.

Copyright © Huawei Technologies Co., Ltd.

NOTE

It is good practice to perform the installation from the side view to promptly align the hooks with the mounting holes.

Figure 7-13 Installing a pRRU3901 on a ceiling

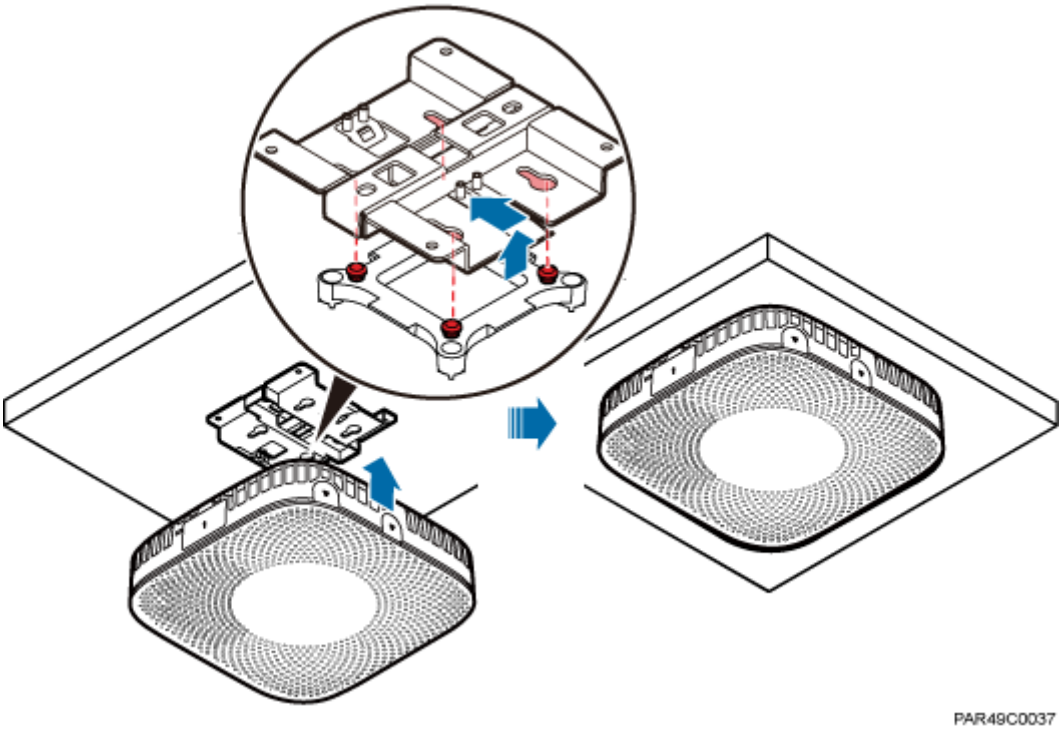

----End

7.4.4 Installing a pRRU3901 on a Pole

This section describes how to install a pRRU3901 on a metal pole indoors.

Procedure

Step 1 Determine the position for installing the pRRU3901 based on the construction blueprint and the clearance requirements.

NOTE

For details about the clearance requirements, see 7.1.3 Space Requirements.

Step 2 If the diameter of the pole ranges from 30 mm to 70 mm, use the delivered V clamp, mounting bracket, and bolts to install the pRRU3901 on the pole. Lead the M6x80 bolts through the mounting bracket, and torque the bolts to 5 N•m, as shown in Figure 7-14.

Copyright © Huawei Technologies Co., Ltd.

Figure 7-14 Securing the pRRU3901 mounting bracket on the metal pole

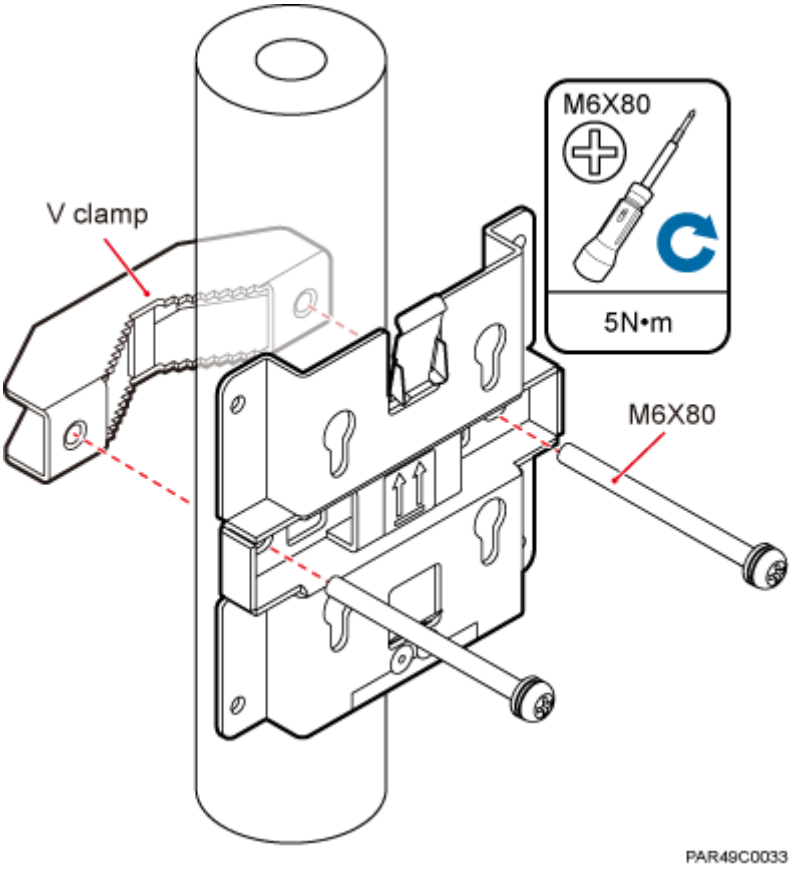

If the diameter of the pole is greater than 70 mm, use the hose clamp to install the mounting bracket on the pole. The hose clamp is prepared by customers. Torque the bolts to 5 N•m, as shown in Figure 7-15.

Copyright © Huawei Technologies Co., Ltd.

Figure 7-15 Securing the pRRU3901 mounting bracket on the metal pole

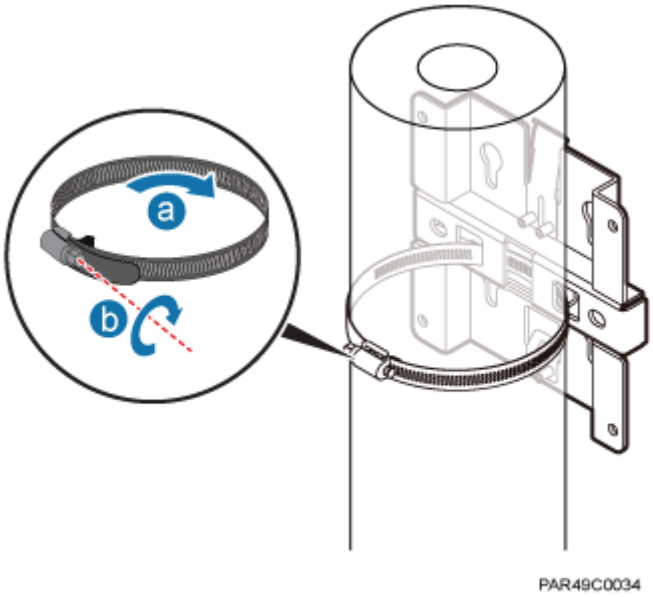

Step 3 Fit the four hooks of the pRRU3901 into the mounting holes on the mounting bracket and then press the pRRU3901 downwards until a click is heard. See Figure 7-16.

NOTE

It is good practice to perform the installation from the side view to promptly align the hooks with the mounting holes.

Copyright © Huawei Technologies Co., Ltd.

Figure 7-16 Installing a pRRU3901 on a pole

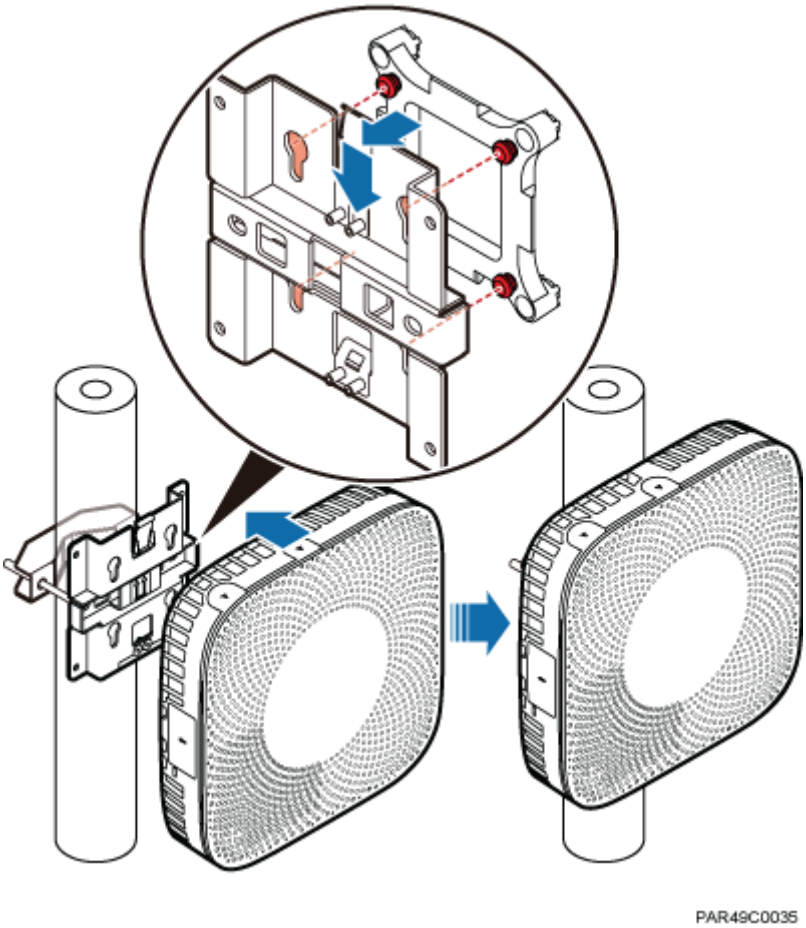

----End

7.4.5 Installing a pRRU3901 on a Plate

This section describes how to install a pRRU3901 on a plate. If a suspended ceiling plate has adequate load bearing capacity and installation space, the pRRU3901 can be installed on the plate. However, it is good practice not to install a pRRU3901 on an aluminum plate.

Procedure

Step 1 Determine the position for installing the pRRU3901 based on the construction blueprint and the clearance requirements.

NOTE
For details about the clearance requirements, see 7.1.3 Space Requirements.

Step 2 Place the mounting bracket in the installation position against the wall. Then, level the mounting bracket and use a marker to mark two anchor points. See Figure 7-17.

Copyright © Huawei Technologies Co., Ltd.

Figure 7-17 Anchor points on the pRRU3901 mounting bracket (unit: mm)

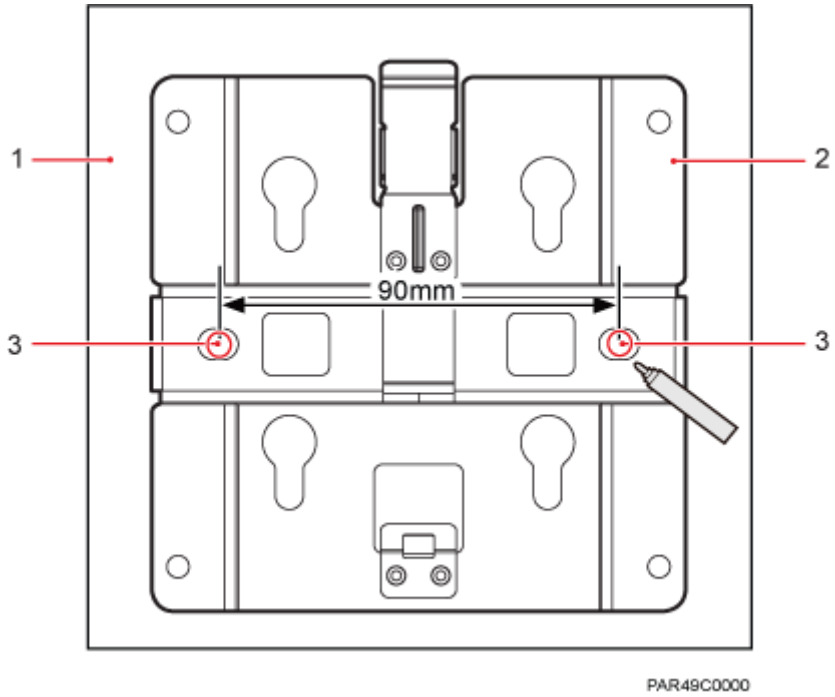

(1) Plate (2) Mounting bracket (3) Anchor point

CAUTION

To prevent inhalation or eye contact with dust, take adequate preventive measures when drilling holes.

Step 3 Use a hammer drill with φ8 bore to drill holes at the anchor points.

Step 4 Lead the M6x80 bolts through the mounting bracket and the ceiling plate, and use a torque screwdriver to torque the bolts to 5 N•m, as shown in Figure 7-18.

Copyright © Huawei Technologies Co., Ltd.

Figure 7-18 Installing the pRRU3901 mounting bracket

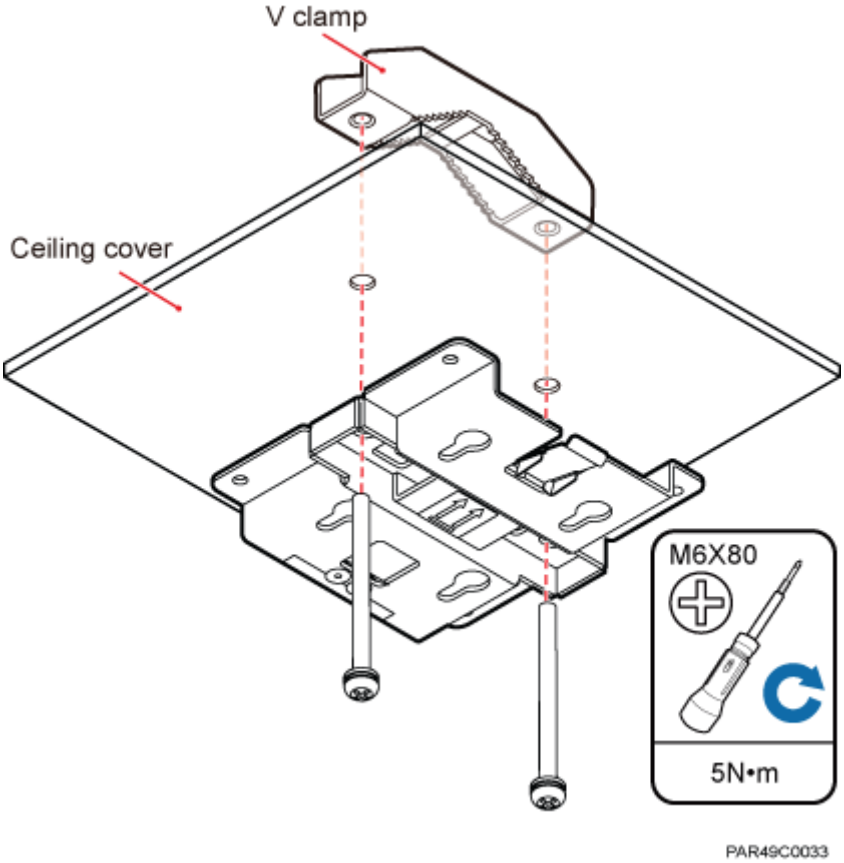

Step 5 Fit the four hooks of the pRRU3901 into the mounting holes on the mounting bracket and then press the pRRU3901 downwards until a click is heard. See Figure 7-19.

NOTE

It is good practice to perform the installation from the side view to promptly align the hooks with the mounting holes.

Copyright © Huawei Technologies Co., Ltd.

Figure 7-19 Installing a pRRU3901 on a plate

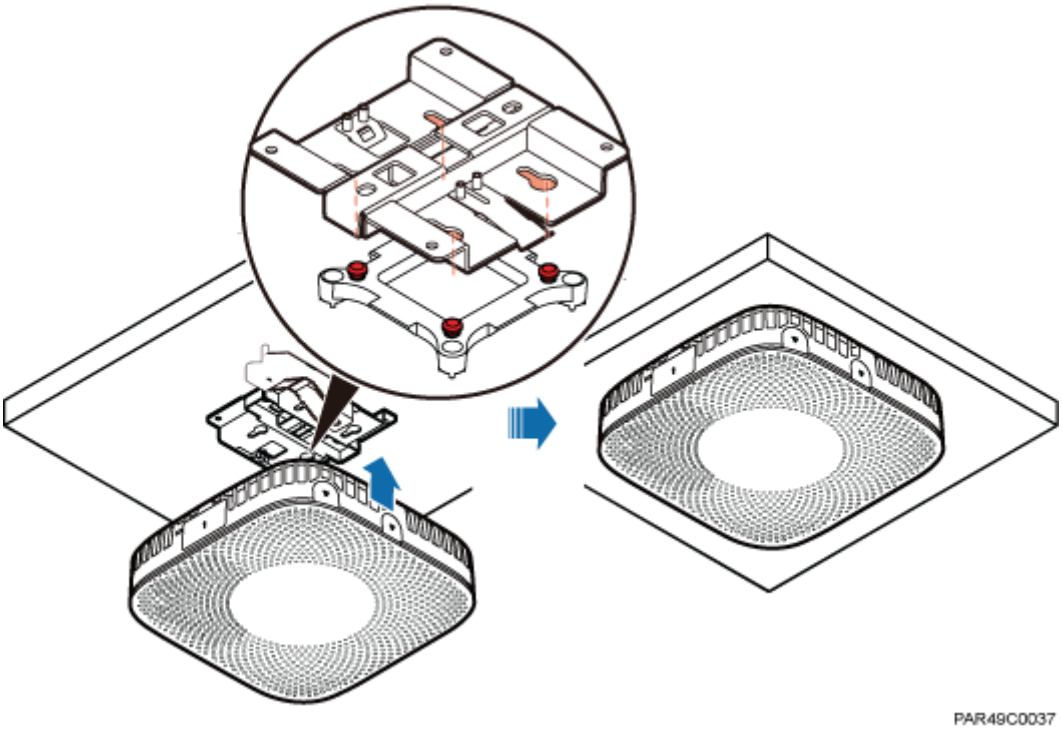

----End

7.4.6 Installing a pRRU3901 on a Keel

This section describes how to install a pRRU3901 on a keel. If a suspended ceiling plate cannot bear the pRRU3901, the pRRU3901 can be installed on the keel on the ceiling.

Context

Before installing the pRRU3901 on a keel, ensure that the keel is strong enough to bear the pRRU3901.

- The mounting bracket of the pRRU3901 can be installed on the keel of the following specifications: GBT 11981-2008, JIS A6517-2002, and ASTM C635 C635M-2007. The installation mode depends on onsite requirements because there are various keels.
- This section describes the procedure of installing a pRRU3901 on the keel of JIS standard used in Japan. The procedure of installing a pRRU3901 on other keels is the same as that of installing a pRRU3901 on the keel of JIS standard.

Procedure

Step 1 Determine the position for installing the pRRU3901 based on the construction blueprint and the clearance requirements.

NOTE
For details about the clearance requirements, see 7.1.3 Space Requirements.

Copyright © Huawei Technologies Co., Ltd.

Step 2 Place the V clamp across the keel, and use a marker to mark the projective positions of the mounting holes on the suspended ceiling plate, as shown in Figure 7-20.

Figure 7-20 Anchor points on the suspended ceiling plate (unit: mm)

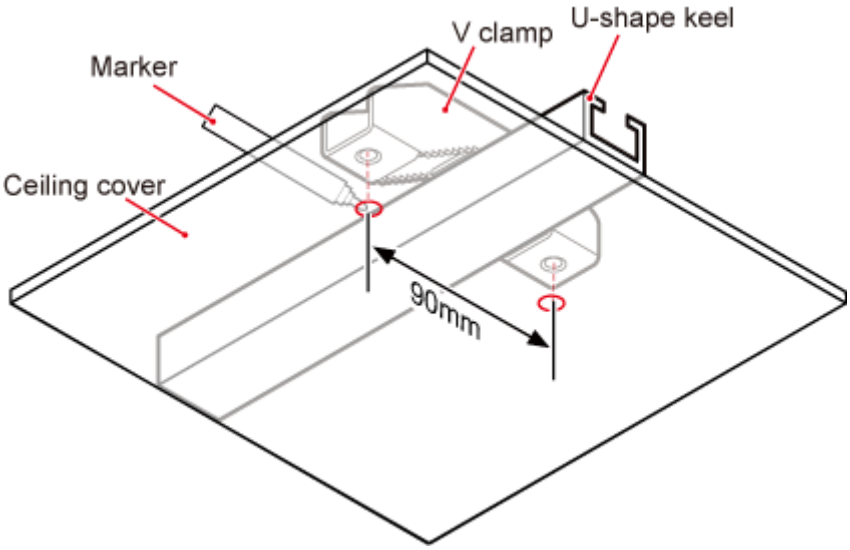

CAUTION

To prevent inhalation or eye contact with dust, take adequate preventive measures when drilling holes.

Step 3 Use a hammer drill to drill holes at the anchor points. You are advised to use the hammer drill with Φ12 bore.

Step 4 Lead the M6x80 bolts through the mounting bracket and the suspended ceiling plate. Use a torque screwdriver to torque the bolts to 5 N•m, as shown in Figure 7-21.

Copyright © Huawei Technologies Co., Ltd.

Figure 7-21 Installing the pRRU3901 mounting bracket

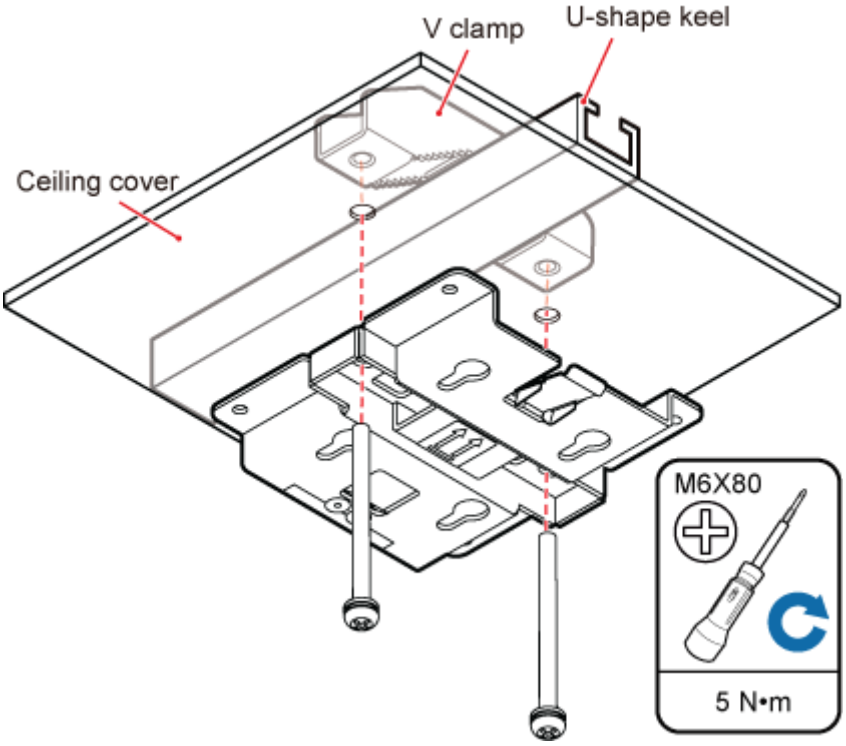

Step 5 Fit the four hooks of the pRRU3901 into the mounting holes on the mounting bracket and then press the pRRU3901 downwards until a click is heard. See Figure 7-22.

NOTE

It is good practice to perform the installation from the side view to promptly align the hooks with the mounting holes.

Copyright © Huawei Technologies Co., Ltd.

Figure 7-22 Installing a pRRU3901 on a keel

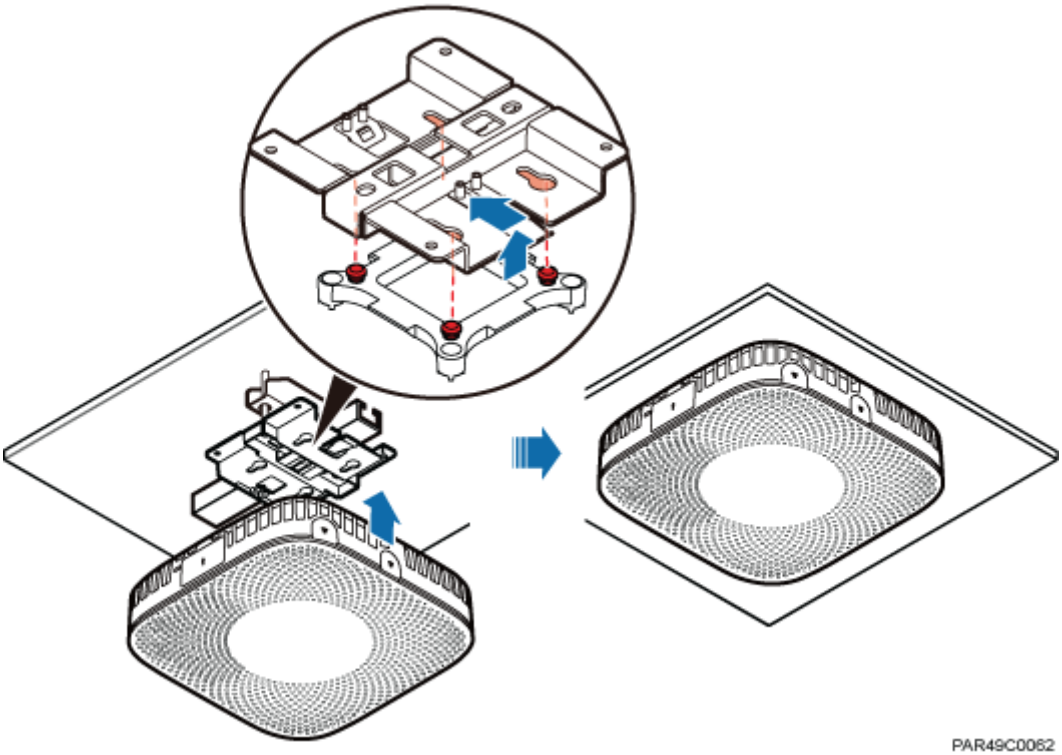

----End

7.4.7 Installing the Cabinet

In the outdoor scenario, the pRRU3901 should be installed in the cabinet firstly.

Context

- When installed in the cabinet, the housing of pRRU3901 should be removed.
- An RF surge protector provides surge protection for the RF ports on pRRU3902, and a PoE surge protector provides surge protection for the CPRI ports.
- One pRRU3901 with internal antenna need to be configured with one or two PoE surge protectors.
- One pRRU3901 with external antenna need to be configured with one PoE surge protector, or two RF surge protectors when one RF daughter board is configured, or four RF surge protectors when two RF daughter boards are configured.

Procedure

Step 1 Remove the housing on the top and at the bottom of pRRU3901, as shown in Figure 7-23.

Copyright © Huawei Technologies Co., Ltd.

Figure 7-23 Removing the housing of pRRU3901

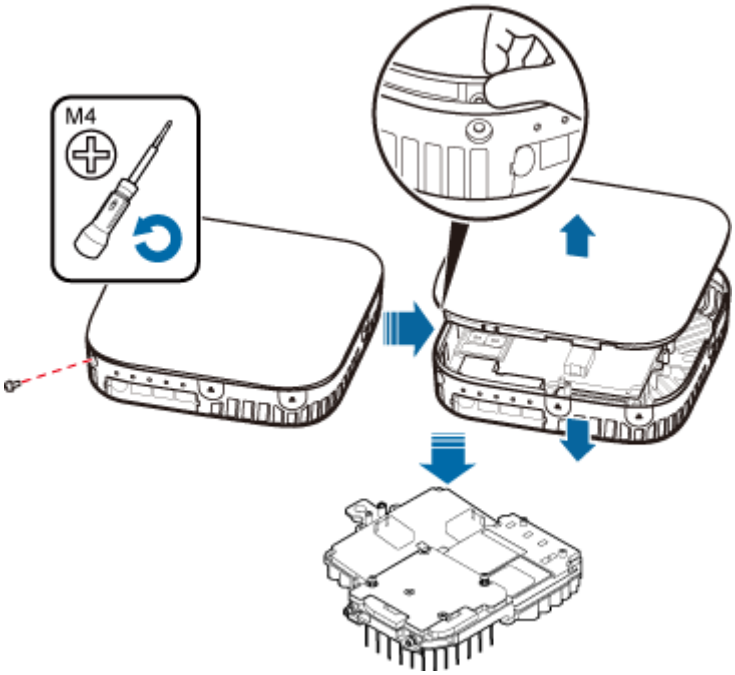

1. Use the M4 Phillips screwdriver to loosen the Phillips screw on the pRRU housing. Wrench and remove the housing from the installation position of the Phillips screw hole, as shown in Figure 7-24.

Figure 7-24 Removing the pRRU housing

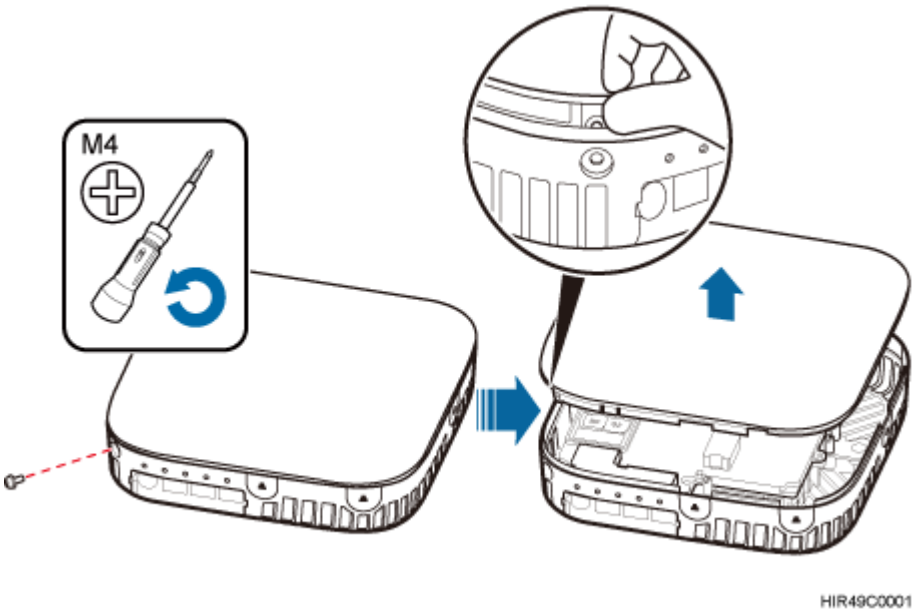

Copyright © Huawei Technologies Co., Ltd.

NOTE

- The pRRU housing and the RF daughter board can be secured using either Phillips screws or protection screws, requiring the same installation operations. This section uses Phillips screws as an example to describe the installation operations.
- Keep the Phillips screw secure for future use.

2. Use the M4 Phillips screwdriver to loosen the Phillips screws on the RF daughter board, as shown in Figure 7-25.

Figure 7-25 Loosen the Phillips screws

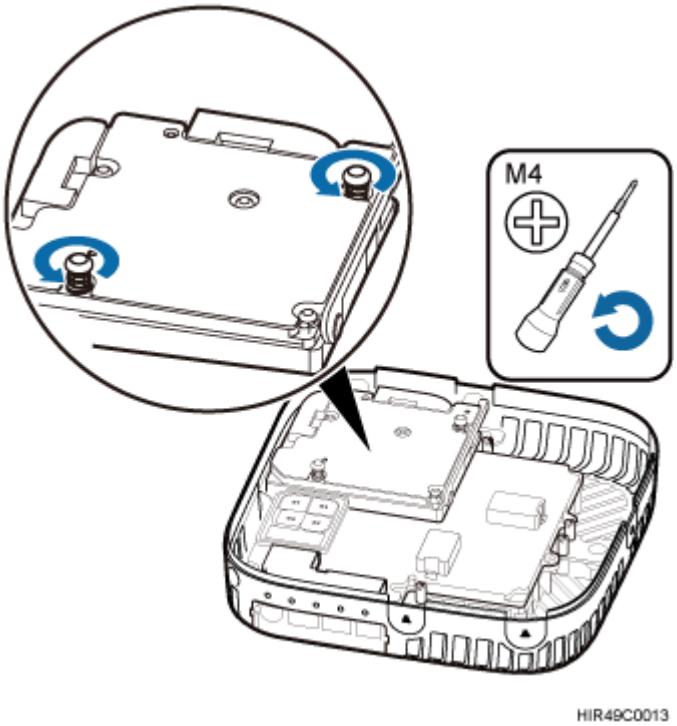

3. Use the left hand to hold the RF daughter board and the right hand to hold the right handle of the RF daughter board to remove the RF daughter board and put it into an ESD box or bag, as shown in Figure 7-26.

Copyright © Huawei Technologies Co., Ltd.

Figure 7-26 Removing the RF daughter board in slot1

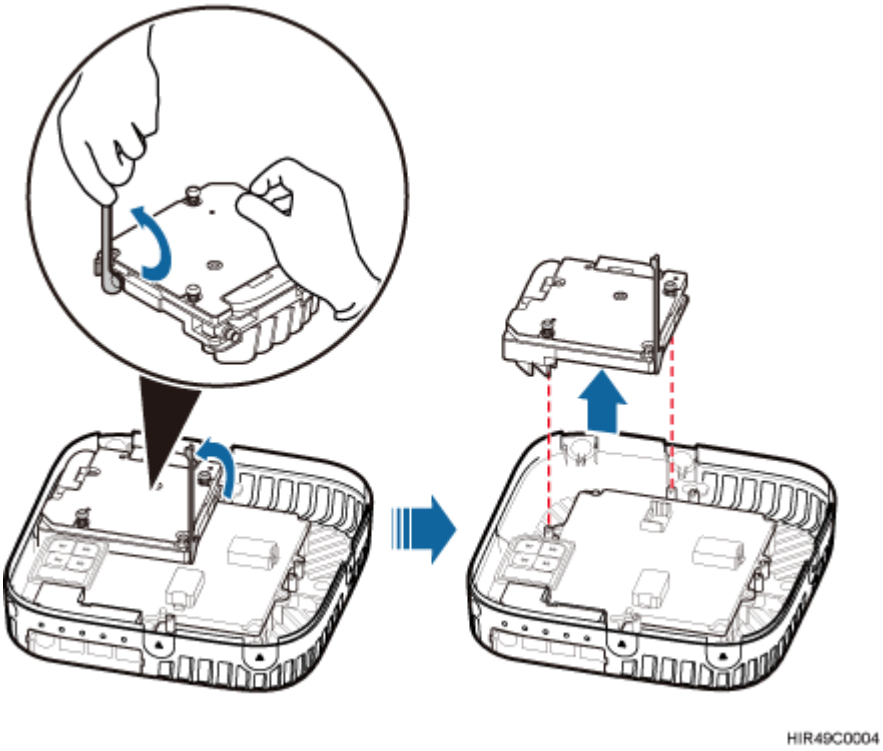

4. Use an M3 Phillips screwdriver to loosen the two fastening screws of the light pipe, and remove the light pipe, as shown in Figure 7-27.

Figure 7-27 Removing the light pipe

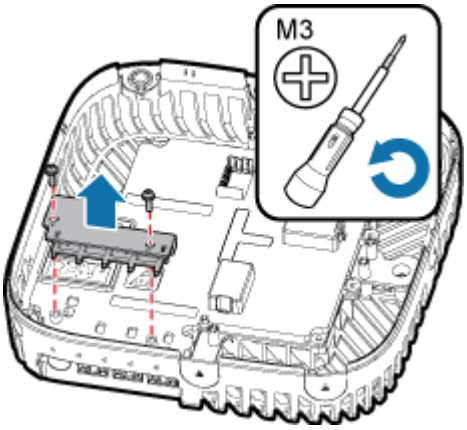

5. Use the M3 Phillips screwdriver to loosen the four fastening screws of the pDock mother board, and remove the pDock mother board, as shown in Figure 7-28.

Copyright © Huawei Technologies Co., Ltd.

Figure 7-28 Removing the pDock mother board

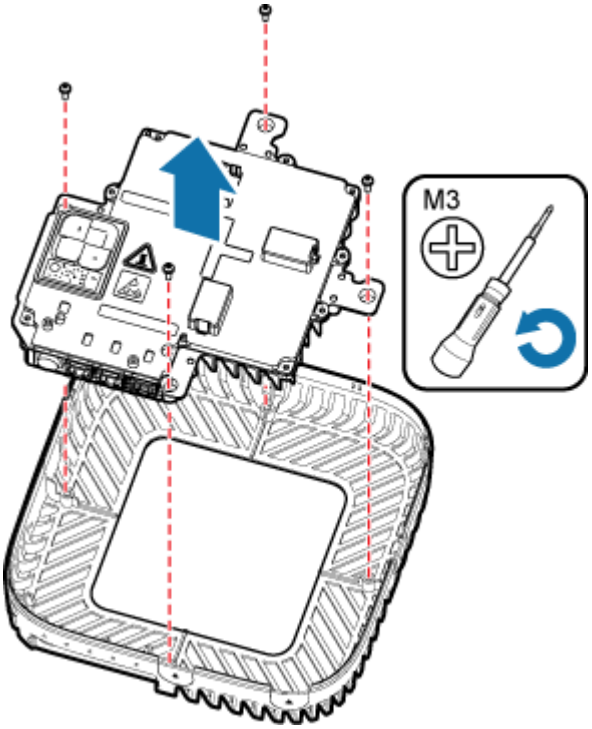

6. Install the RF daughter boards in slots S1, and use the M4 Phillips screwdriver to tighten the two fastening screws always carried on each daughter board to 1.4 N•m, as shown in Figure 7-29.

Figure 7-29 Installing the RF daughter boards

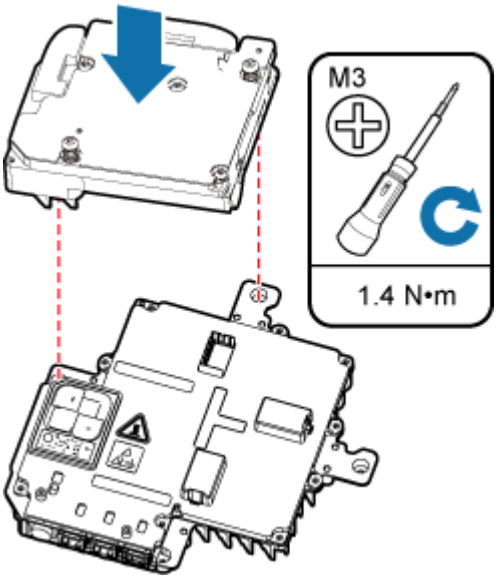

Copyright © Huawei Technologies Co., Ltd.

NOTICE

The installation positions of the RF daughter boards must be consistent before and after the replacement.

Step 2 Install the plate onto the cabinet, as shown in Figure 7-30.

Figure 7-30 Installing the plate onto the cabinet

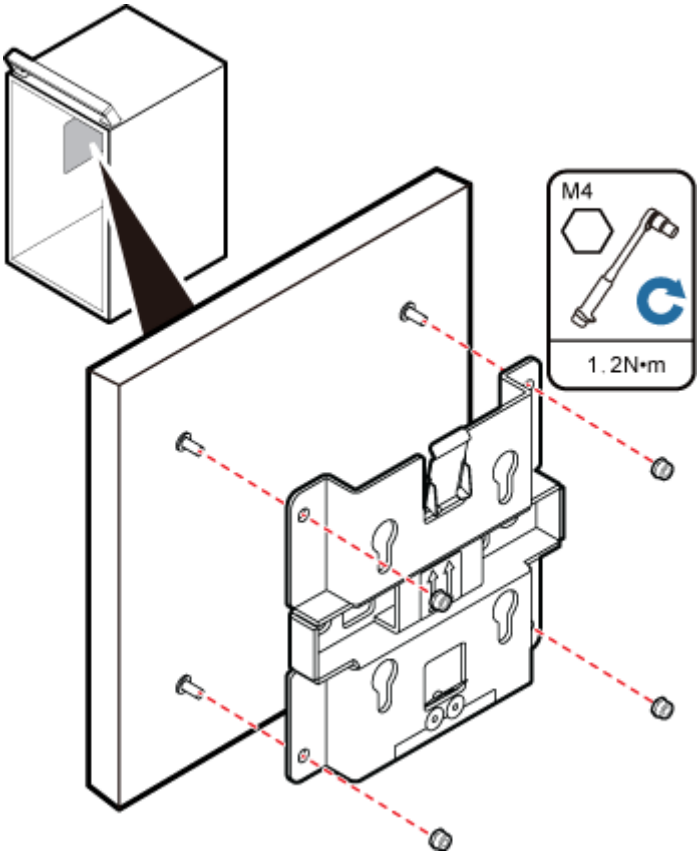

NOTICE

Make sure all the cables are installed before installing the plate. For details about installing the cables of pRRU3901, see Figure 7-31.

Copyright © Huawei Technologies Co., Ltd.

Figure 7-31 Installing the pRRU3901 cables

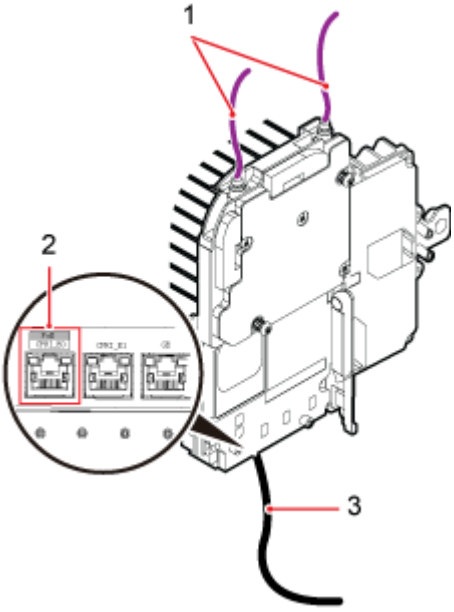

(1) RF Jumper	(2) CPRI_E0 port	(3) Ethernet Cable

Step 3 Fit the four hooks on pRRU3901 into the hooks on the mounting bracket, and then push pRRU3901 down against the mounting bracket until a click is heard, as shown in Figure 7-32.

Figure 7-32 Installing a pRRU3901 into the cabinet

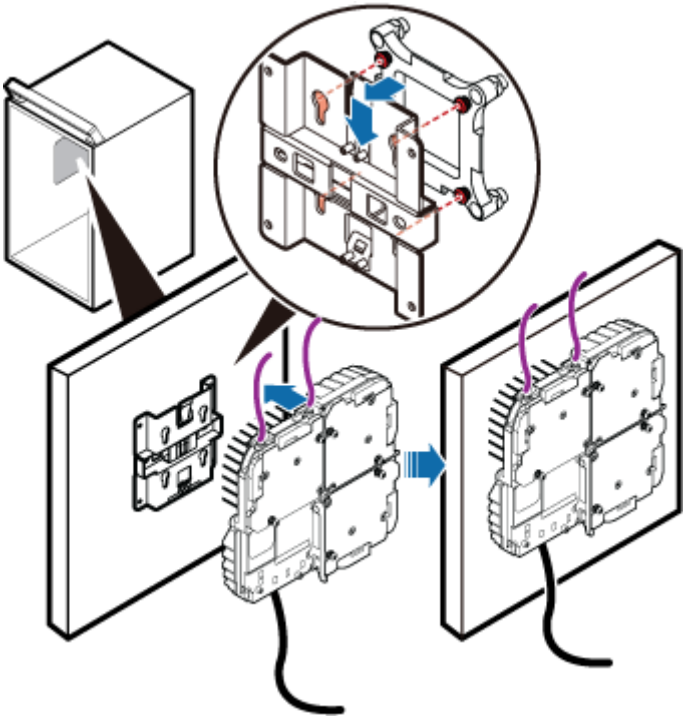

Copyright © Huawei Technologies Co., Ltd.

----End

7.5 Installing pRRU3901 Cables

This section describes the procedure of installing the pRRU3901 cables.

7.5.1 Requirements for Cable Layout

Cables must be routed according to the specified cabling requirements to prevent signal interference.

NOTE
If certain cables listed below are not required, skip the requirements for routing these cables.

General Requirements for Cable Layout

National Standards

- Code for Engineering Design of Generic Cabling System for Building and Campus (GB 50311-2007)
- Code for Engineering Acceptance of Generic Cabling System for Building and Campus (GB50312-2007).
- Security Protection Engineering Technology Specifications (GB 50348-2004)
- Code for Construction and Acceptance of the Electronic Information System Room (GB 50462-2008)
- Code for Quality Acceptance of the Intelligent Building Engineering (GB 50339-2003)
- Code for Quality Acceptance of Electric Engineering Construction in Building (GB 50303-2002)
- Technical Specification for Construction and Acceptance of Telecommunication Conduit Engineering (GB 50374-2006)

International Standards

- Generic Cabling for Customer Premises (ISO/IEC 11801)
- Commercial Building Telecommunications Cabling Standard (EIA/TIA 568)
- Commercial Building Standard for Telecommunication Pathways and Spaces (EIA/TIA 569)
- Administration Standard for Commercial Telecommunications Infrastructure (EIA/TIA 606)
- Grounding and Bonding Requirements for Telecommunications in Commercial Buildings (EIA/TIA 607)
- Generic Cabling Systems for Information Technology (EN 50173)
- Cabling Installation for Information Technology (EN 50174)

Bending radius

- The bending radius of a 1/4" jumper, a 1/2" softer jumper, and a 1/2" common jumper must be longer than 35 mm, 50 mm, and 127 mm, respectively.
- The bending radius of a power cable is at least three times the diameter of the cable.

Copyright © Huawei Technologies Co., Ltd.

- The bending radius of a signal cable must be at least five times of the diameter of the cable.

Cable binding

- Cables of the same type are bound together.
- Different types of cables must be separately routed with a minimum spacing of 30 mm and cannot be entangled.
- The cables are bound tightly and neatly and the sheaths of the cables is intact.
- The cable ties face the same direction and all cable ties bound at similar positions must be in a straight line.
- The extra length of each indoor cable tie must be cut off. A slack of 5 mm is reserved for each outdoor cable tie before the extra length is cut off. All cut surfaces are without sharp edges.
- Labels or nameplates are attached to both ends, joints, or turns of cables after they are installed.

Safety

- The steel pipe or fire-resistant rigid polyvinyl chloride pipe should be used for the cable duct or for routing cables. The cross-sectional usage of the cable duct should be 30% to 50% and that of the pipe for routing cables should be 25% to 30%.
- Cables are placed away from sharp objects or wall burrs. If these positions are inevitable, protection pipes are required for the cables.
- Cables are routed away from heat sources, or heat-insulation materials are added between cables and heat sources.
- A clearance is reserved at turns of a cable or the position close to a device, facilitating cable and device maintenance. The recommended clearance is about 0.1 m.

Requirements for Special Cables

Ethernet Cable

- A maximum of 100 Ethernet cables can be bundled if no PVC pipes are used. If pipes are used, a maximum of 24 Ethernet cables can be led through a pipe. In this case, ensure that 1/3 space inside the pipes must be vacant.
- The point at which an Ethernet cable is bundled must be spaced 400 mm or less from the Ethernet port on a pRRU.
- For the pRRU3901 used in the elevator engine room on the rooftop, generator set for the subway engine, and equipment room with central air conditioning, Ethernet cables must be led through metallic conduits that are reliably grounded at both ends.

7.5.2 pRRU3901 Cable List

This section describes pRRU3901 cable connections.

Table 7-8 List of pRRU3901 cables

Cable	One End		The Other End	
	Connector	Connected to ...	Connector	Connected to ...

Copyright © Huawei Technologies Co., Ltd.

Cable	One End		The Other End	
	Connector	Connected to ...	Connector	Connected to ...
Ethernet Cable	RJ45 connector	CPRI_E0~CPRI_E7 port on RHUB	RJ45 connector	CPRI_E0~CPRI_E1 port on pRRU
	RJ45 connector	Transmission port on Access Control(AC)	RJ45 connector	• GE port on pRRU3901 • CPRI_E1 port on pRRU3911/ pRRU3911+ WIFI
(Optional) RF Jumper	SMA straight male connector/Type N male connector	External antenna TX/RX RF port on pRRU	Based on the port model of the antenna system.	Antenna system

NOTE

When the RHUB and the pRRU3901 connected using the Ethernet cable. If the Extender is used,

- In the indoor scenario, the Ethernet cable is divided into two parts, one between the RHUB and the Extender and the other between the Extender and the pRRU3901.
- In the outdoor scenario, the Ethernet cable is divided into two parts, one among RHUB-PoE surge protector 2- PoE surge protector 3-Extender and the other among the Extender- PoE surge protector 4- PoE surge protector 1-pRRU3901.

7.5.3 Cable Connections (Indoor)

This section describes the cable connections for a single pRRU3901 and multiple pRRU3901s in UMTS, LTE FDD, UMTS+LTE FDD, LTE FDD+LTE FDD mode.

Before installing the pRRU3901 cables, you must be aware of the following information:

- The pRRU3901 can obtain power supply through the power over Ethernet (PoE).
- For external antennas corresponding to RF daughter board 1, the TX port and RX port are ANT0 and ANT1, respectively. For external antennas corresponding to RF daughter board 2, the TX port and RX port are ANT2 and ANT3, respectively. For external antennas corresponding to RF daughter board 3, the TX port and RX port are ANT4 and ANT5, respectively.
- The external antenna system is optional, and the pRRU3901 jumpers are not delivered. By default, the pRRU3901s are configured with built-in antennas. If the external antenna system is connected, the antenna system automatically switches to the external one. One end of the pRRU3901 RF jumper is the SMA male connector, which is connected to the external antenna TX/RX RF port on the pRRU3901. The other end of the pRRU3901 RF jumper is the type N male connector, which is connected to the antenna system. For the standard of the pRRU3901 RF jumper, see (Optional) RF Jumper of the *DBS3900 LampSite Hardware Description*.

Copyright © Huawei Technologies Co., Ltd.

Figure 7-33 shows the cable connection when the pRRU3901 is configured with only one RF Daughter Board.

Figure 7-33 pRRU3901 cable connection (1)

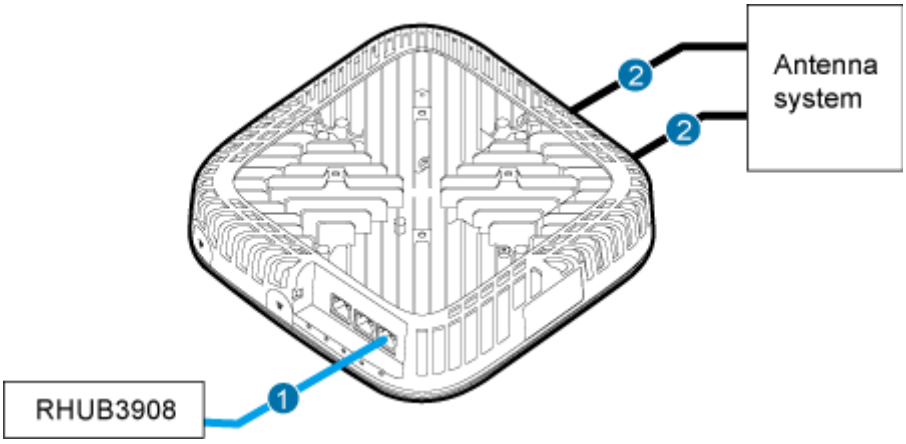

(1) Ethernet cable (2) RF jumper

NOTE

- The Extender can be used to lengthen the distance between the RHUB and the pRRU3901 connected using the Ethernet cable. If the Extender is used, the Ethernet cable is divided into two parts, one between the RHUB and the Extender and the other between the Extender and the pRRU3901.
- When two Ethernet cables are used to transmit CPRI signals, connect one end of the cables to the CPRI_E0 and CPRI_E1 ports on the pRRU panel and the other end to any two ports of CPRI_E0 to CPRI_E7 on the RHUB panel. On the RHUB panel, CPRI_E0 and CPRI_E1, CPRI_E2 and CPRI_E3, CPRI_E4 and CPRI_E5, and CPRI_E6 and CPRI_E7 are used in pairs. CPRI_E0 on the pRRU panel connects to the even-numbered CPRI port (for example, CPRI_E0, CPRI_E2, CPRI_E4, or CPRI_E6) on the RHUB panel, and CPRI_E1 on the pRRU panel connects to the odd-numbered CPRI port (for example, CPRI_E1, CPRI_E3, CPRI_E5, or CPRI_E7). This document describes signal transmission using one Ethernet cable as an example.

Figure 7-34 shows the cable connection when the pRRU3901 is configured with two RF Daughter Boards.

Copyright © Huawei Technologies Co., Ltd.

Figure 7-34 pRRU3901 cable connection (2)

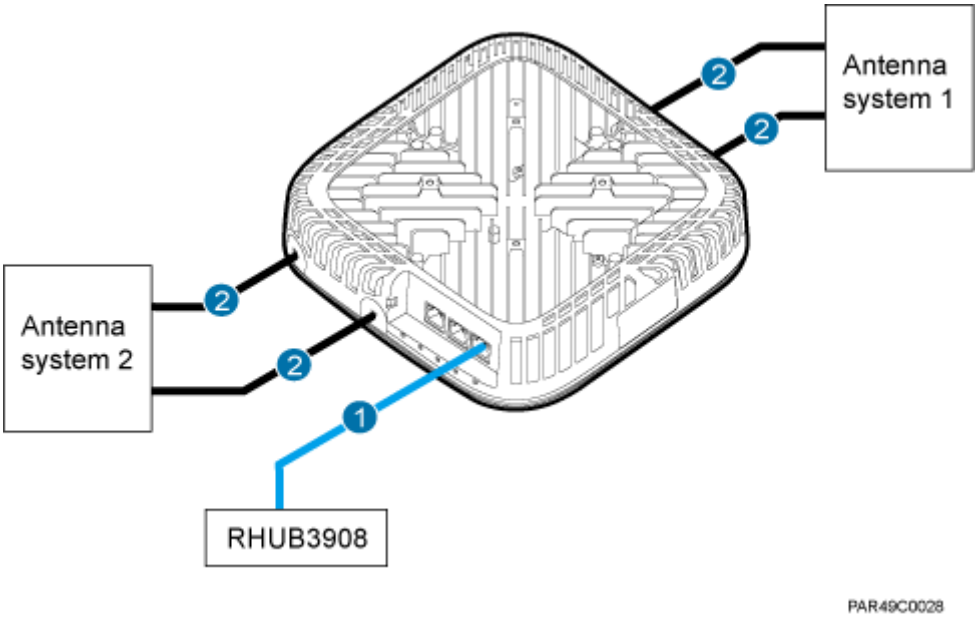

(1) Ethernet cable (2) RF jumper

NOTE

- The Extender can be used to lengthen the distance between the RHUB and the pRRU3901 connected using the Ethernet cable. If the Extender is used, the Ethernet cable is divided into two parts, one between the RHUB and the Extender and the other between the Extender and the pRRU3901.
- When two Ethernet cables are used to transmit CPRI signals, connect one end of the cables to the CPRI_E0 and CPRI_E1 ports on the pRRU panel and the other end to any two ports of CPRI_E0 to CPRI_E7 on the RHUB panel. On the RHUB panel, CPRI_E0 and CPRI_E1, CPRI_E2 and CPRI_E3, CPRI_E4 and CPRI_E5, and CPRI_E6 and CPRI_E7 are used in pairs. CPRI_E0 on the pRRU panel connects to the even-numbered CPRI port (for example, CPRI_E0, CPRI_E2, CPRI_E4, or CPRI_E6) on the RHUB panel, and CPRI_E1 on the pRRU panel connects to the odd-numbered CPRI port (for example, CPRI_E1, CPRI_E3, CPRI_E5, or CPRI_E7). This document describes signal transmission using one Ethernet cable as an example.

Figure 7-34 shows the cable connection when the pRRU3901 is configured with two RF Daughter Boards and one Wi-Fi daughter board.

Copyright © Huawei Technologies Co., Ltd.

Figure 7-35 pRRU3901 cable connection (3)

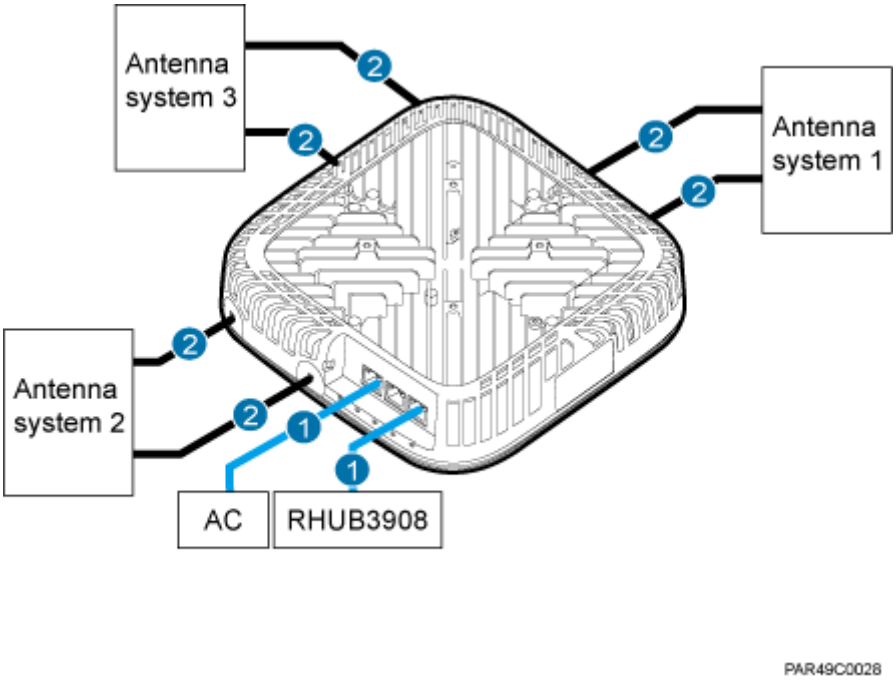

(1) Ethernet cable (2) RF jumper

NOTE

- The Extender can be used to lengthen the distance between the RHUB and the pRRU3901 connected using the Ethernet cable. If the Extender is used, the Ethernet cable is divided into two parts, one between the RHUB and the Extender and the other between the Extender and the pRRU3901.
- When two Ethernet cables are used to transmit CPRI signals, connect one end of the cables to the CPRI_E0 and CPRI_E1 ports on the pRRU panel and the other end to any two ports of CPRI_E0 to CPRI_E7 on the RHUB panel. On the RHUB panel, CPRI_E0 and CPRI_E1, CPRI_E2 and CPRI_E3, CPRI_E4 and CPRI_E5, and CPRI_E6 and CPRI_E7 are used in pairs. CPRI_E0 on the pRRU panel connects to the even-numbered CPRI port (for example, CPRI_E0, CPRI_E2, CPRI_E4, or CPRI_E6) on the RHUB panel, and CPRI_E1 on the pRRU panel connects to the odd-numbered CPRI port (for example, CPRI_E1, CPRI_E3, CPRI_E5, or CPRI_E7). This document describes signal transmission using one Ethernet cable as an example.

7.5.4 Cable Connections (Outdoor)

This section describes the cable connections for a pRRU3901 installed outside.

Before installing the pRRU3901 cables, you must be aware of the following information:

- The pRRU3901 can obtain power supply through the power over Ethernet (PoE).
- For external antennas corresponding to RF daughter board 1, the TX port and RX port are ANT0 and ANT1, respectively. For external antennas corresponding to RF daughter board 2, the TX port and RX port are ANT2 and ANT3, respectively. For external antennas corresponding to RF daughter board 3, the TX port and RX port are ANT4 and ANT5, respectively.
- The external antenna system is optional, and the pRRU3901 jumpers are not delivered. By default, the pRRU3901s are configured with built-in antennas. If the external antenna system is connected, the antenna system automatically switches to the external one. One end of the pRRU3901 RF jumper is the SMA male connector, which is connected to the

Copyright © Huawei Technologies Co., Ltd.

external antenna TX/RX RF port on the pRRU3901. The other end of the pRRU3901 RF jumper is the type N male connector, which is connected to the antenna system. For the standard of the pRRU3901 RF jumper, see (Optional) RF Jumper of the *DBS3900 LampSite Hardware Description*.

pRRU3901 can be configured with one RF daughter board, or two RF daughter boards, or two RF daughter boards and one WiFi daughter board. Figure 7-36 shows the cable connection when the pRRU3901 is configured with only one RF Daughter Board in the outside scenario.

Figure 7-36 pRRU3901 cable connection

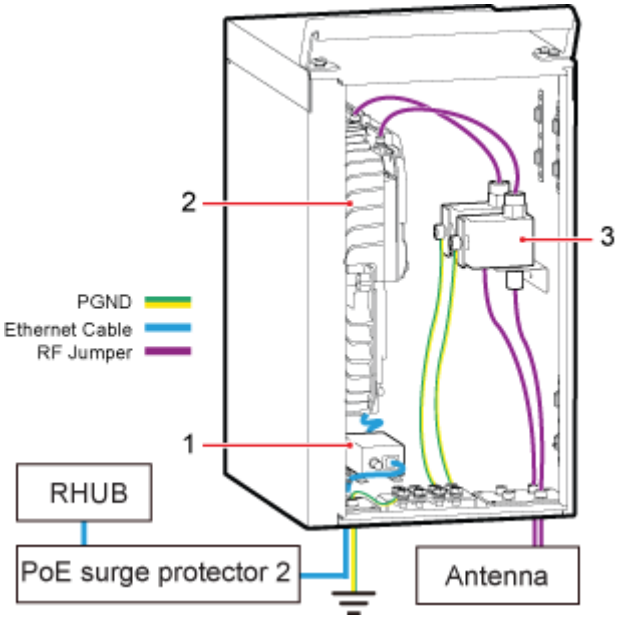

(1) PoE surge protector 1 (2) pRRU3901 (3) RF surge protector

NOTE

- When two Ethernet cables are used to transmit CPRI signals, connect one end of the cables to the CPRI_E0 and CPRI_E1 ports on the pRRU panel and the other end to any two ports of CPRI_E0 to CPRI_E7 on the RHUB panel. On the RHUB panel, CPRI_E0 and CPRI_E1, CPRI_E2 and CPRI_E3, CPRI_E4 and CPRI_E5, and CPRI_E6 and CPRI_E7 are used in pairs. CPRI_E0 on the pRRU panel connects to the even-numbered CPRI port (for example, CPRI_E0, CPRI_E2, CPRI_E4, or CPRI_E6) on the RHUB panel, and CPRI_E1 on the pRRU panel connects to the odd-numbered CPRI port (for example, CPRI_E1, CPRI_E3, CPRI_E5, or CPRI_E7). This document describes signal transmission using one Ethernet cable as an example.
- The Extender can be used to lengthen the distance between the RHUB and the pRRU3901 connected using the Ethernet cable. If the Extender is used, the Ethernet cable is divided into two parts, one among the RHUB, PoE surge protector 2, PoE surge protector 3, Extender and the other among Extender, PoE surge protector 4, PoE surge protector 1, pRRU3901.
- For details about installation of the PoE surge protector and cables, see 12 (Optional) Installing the PoE Surge Protector and Cables.
- For details about installation of the RF surge protector and cables, see 13 (Optional) Installing the RF Surge Protector and Cables.

7.5.5 Cable Connections (LTE TDD)

This section describes the cable connections for a single pRRU3901 and multiple pRRU3901s in LTE TDD mode.

Copyright © Huawei Technologies Co., Ltd.

Before installing the pRRU3901 cables, you must be aware of the following information:

- The pRRU3901 can obtain power supply through the power over Ethernet (PoE).
- For external antennas corresponding to RF daughter board 1, the TX port and RX port are ANT0 and ANT1, respectively. For external antennas corresponding to RF daughter board 2, the TX port and RX port are ANT2 and ANT3, respectively. For external antennas corresponding to RF daughter board 3, the TX port and RX port are ANT4 and ANT5, respectively.
- The external antenna system is optional, and the pRRU3901 jumpers are not delivered. By default, the pRRU3901s are configured with built-in antennas. If the external antenna system is connected, the antenna system automatically switches to the external one. One end of the pRRU3901 RF jumper is the SMA male connector, which is connected to the external antenna TX/RX RF port on the pRRU3901. The other end of the pRRU3901 RF jumper is the type N male connector, which is connected to the antenna system. For the standard of the pRRU3901 RF jumper, please see (Optional) RF Jumper of the *DBS3900 LampSite Hardware Description*.

Figure 7-37 shows the cable connection when the pRRU3901 is configured with only one RF Daughter Board.

Figure 7-37 pRRU3901 cable connection (1)

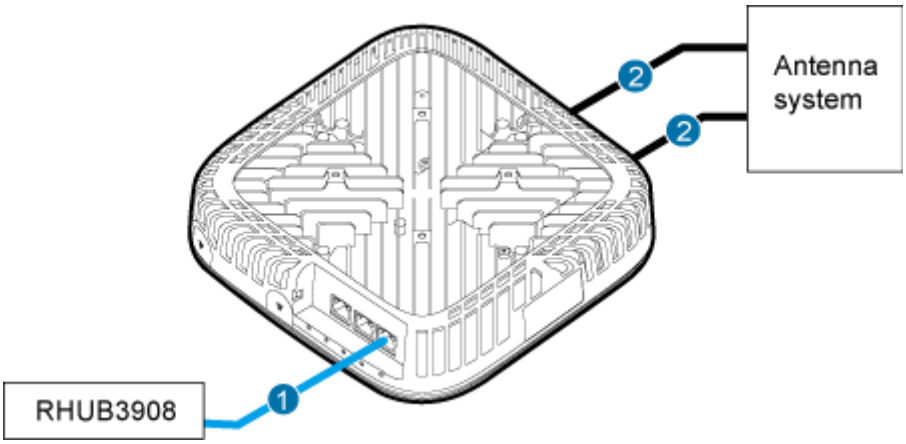

(1) Ethernet cable (2) RF jumper

NOTE

Figure 7-38 shows the cable connection when the pRRU3901 is configured with one RF Daughter Boards and one Wi-Fi daughter board.

Copyright © Huawei Technologies Co., Ltd.

Figure 7-38 pRRU3901 cable connection (2)

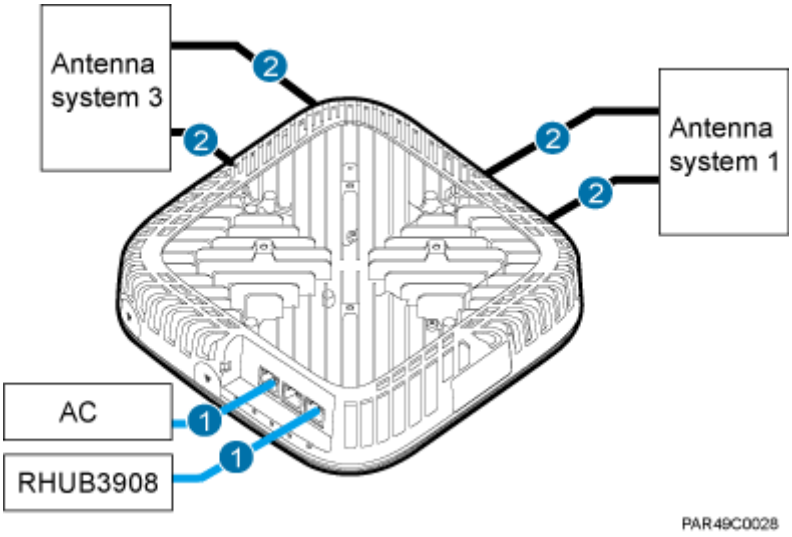

(1) Ethernet cable (2) RF jumper

NOTE

7.5.6 pRRU3901 cable installation process

This section describes the process of installing pRRU3901 cables.

Figure 7-39 shows the process of installing pRRU3901 cables.

Figure 7-39 pRRU3901 cable installation process

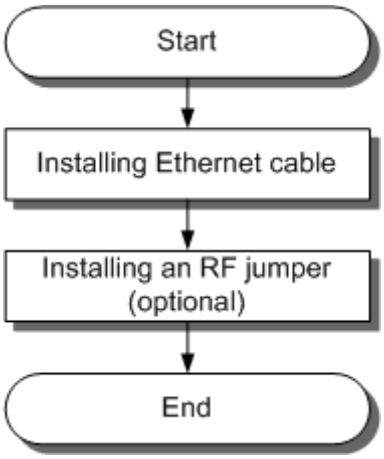

7.5.7 Installing an Ethernet Cable

This section describes how to install an Ethernet cable.

Copyright © Huawei Technologies Co., Ltd.

Prerequisites

- The Ethernet cable must be of Category 5e (enhanced) or higher. In addition, its cross-sectional area must be 24 AWG or larger and frame spread rating must be CM or higher.
- The Ethernet cables can be straight-through cables or crossover cables.
- With the internal PoE module providing power, the maximum length of an Ethernet cable is 100 m. With the Extender, the distance of the pRRU3901 and RHUB can be extended by the Extender up to a total distance of 200 m.
- Ethernet cables are not delivered, and they must be prepared onsite. You need to use a network cable tester to test the Ethernet cable connection.

Context

The Ethernet cable has the following functions:

- Provides power supply for the pRRU3901 when the cable connects the CPRI_E0 port on the pRRU3901 to the RHUB.
- Transmits CPRI signals between an RHUB and a pRRU3901.
- Provides Wi-Fi services for the pRRU3901 when the cable connects the GE port on the pRRU3901 with three transmission ports to the AC.

Using the CPRI_E1 port on the pRRU3901 has the same Ethernet cable connection to the RHUB as using the CPRI_E0 port. The following section describes the connection using the CPRI_E0 port.

For details about the cable connections in the different scenarios, see 7.5.3 Cable Connections (Indoor) and 7.5.4 Cable Connections (Outdoor). The Ethernet cable connections between RHUB and pRRUs are the same. The following section describes the connections between RHUB-Extender-pRRU3901 as an example.

In the outdoor scenario, PoE surge protector is needed to provide surge protection for the Ethernet ports. For details about the installation of PoE surge protector, see 12 (Optional) Installing the PoE Surge Protector and Cables.

Procedure

Step 1 Make the Ethernet cables.

1. Assemble an RJ45 connector and an Ethernet cable by following instructions in Assembling the Unshielded RJ45 Connector and the Ethernet Cable of *Installation Reference*.

NOTE

Follow pin assignment instructions described in section Ethernet Cable in *DBS3900 LampSite Hardware Description* to assemble the unshielded RJ45 connector and the Ethernet cable. Otherwise, the transmission signal quality deteriorates and CPRI links may be disconnected.

2. Check whether the made RJ45 connector is qualified by following instructions in Checking the Appearance of Metal Contact Strips.
3. To complete the assembly of the other end, repeat Step 1.1 and Step 1.2.
4. Check whether the touch points on the connectors at both ends are normally conducted and well contacted and whether the connections are correct by following instructions in Testing the Connection of Assembled Cables of *Installation Reference*.

Step 2 Install an Ethernet cable between an RHUB and a pRRU3901.

Copyright © Huawei Technologies Co., Ltd.

1. Remove the dustproof cap of the CPRI_E0 port on the pRRU3901.
2. Connect the RJ45 connector at one end of the Ethernet cable to the CPRI_E0 port on the pRRU3901 panel.
3. **Optional:** Connect the RJ45 connector at the other end of the Ethernet cable to the output port of the Extender. Then, connect the RJ45 connector at one end of another Ethernet cable to the input port of the Extender.
4. Connect the RJ45 connector at the other end of the Ethernet cable to any port ranging from CPRI_E0 to CPRI_E7 on the RHUB panel based on the engineering design, as shown in Figure 7-40.

Figure 7-40 Installing an Ethernet cable

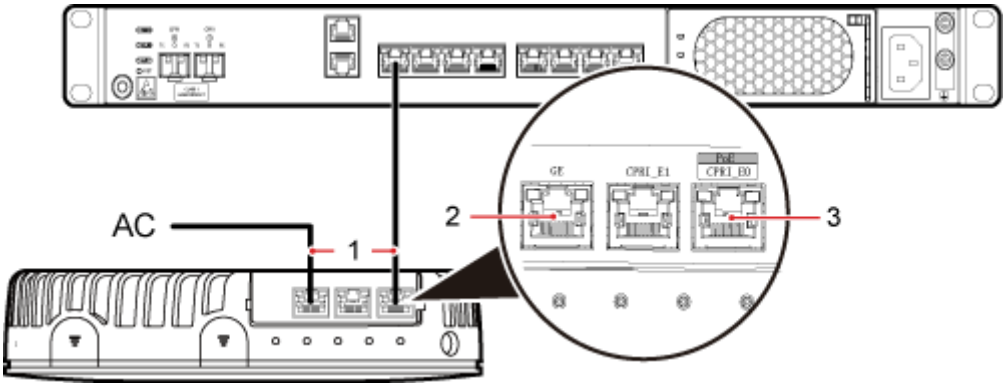

(1) Ethernet cable (2) GE port on the pRRU3901 (3) CPRI_E0 port on the pRRU3901

NOTE
The pRRU3901 can have two transmission ports plus one PWR port or three transmission ports (plus one PWR port or no PWR port), requiring the same installation operations. This section uses the pRRU3901 with three transmission ports no PWR port as an example.

Step 3 **Optional:** Install the Ethernet cable between the pRRU3901 and the AC. This operation is required when the pRRU3901 with three transmission ports is configured with a Wi-Fi daughter board.

1. Remove the dustproof cap of the GE port on the pRRU3901.
2. Connect the RJ45 connector at one end of the Ethernet cable to the GE port on the pRRU3901 panel.
3. Connect the RJ45 connector at the other end of the Ethernet cable to the transmission port of the AC based on the engineering design, as shown in Figure 7-40.

----End

Follow-up Procedure

1. Route the cable, and then use a cable tie to bind the cable. For details, see 7.5.1 Requirements for Cable Layout.
2. Label the installed cable. For details, see section 15.4 Attaching an L-Shaped Label.

Copyright © Huawei Technologies Co., Ltd.

7.5.8 Installing an RF jumpers (Optional)

The RF jumpers transmit radio frequency signals. One end of the RF jumpers is the SMA straight male connector, and the other end is the type N connector.

Context

- If the RF jumper is provided by the customer, the jumper must not be lower than the RG316 specifications. In addition, the jumpers can be used after they are checked by Huawei engineers.
- pRRU3901s can be connected to external whip antennas or external remote antennas (through pRRU3901 RF jumpers). Whip antennas are delivered optionally. RF jumpers are not delivered.
- For details about the cable connections in the different scenarios, see 7.5.3 Cable Connections (Indoor)and 7.5.4 Cable Connections (Outdoor). The installation of RF jumper cables are the same. The following section describes the connections between antenna and pRRU3901 in the indoor scenario as an example.
- In the outdoor scenario, RF surge protector is needed to provide surge protection for the RF ports. For details about the installation of RF surge protector, see 13 (Optional) Installing the RF Surge Protector and Cables.

Procedure

Step 1 Expose the SMA female connector by removing the pRRU3901 antenna housing, as shown in Figure 7-41.

Copyright © Huawei Technologies Co., Ltd.

Figure 7-41 Removing the pRRU3901 antenna housing

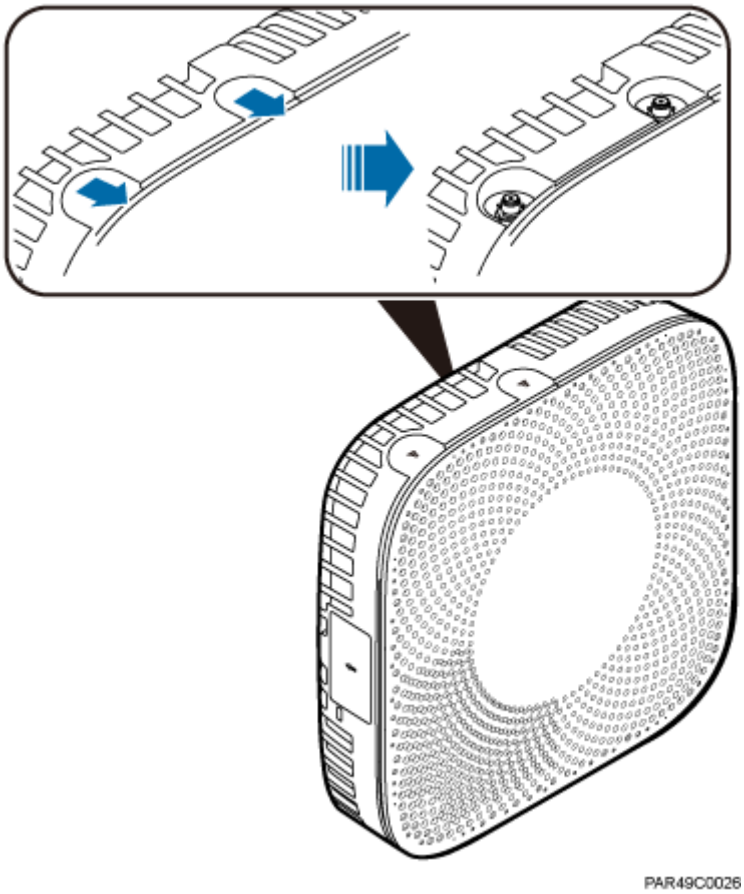

Step 2 Use a torque wrench with a torque of 0.6 N•m to connect the SMA straight male connector on a jumper to the ANT port on the pRRU3901 panel.

NOTICE

Tighten it with hands, and then use a torque wrench to tighten it with a rotational speed of less than or equal to 2.4 rpm to tighten it.

Step 3 Connect the type N female connector of the jumper to the type N male connector of the RF feeder connected to the built-in antenna.

NOTICE

Tighten the feeder close to the type N connector to ensure that the jumper is not tightened. In this way, the connectors on both ends of a jumper are not affected by the external force.

Copyright © Huawei Technologies Co., Ltd.

Figure 7-42 Installing jumpers between the pRRU3901 and external antennas

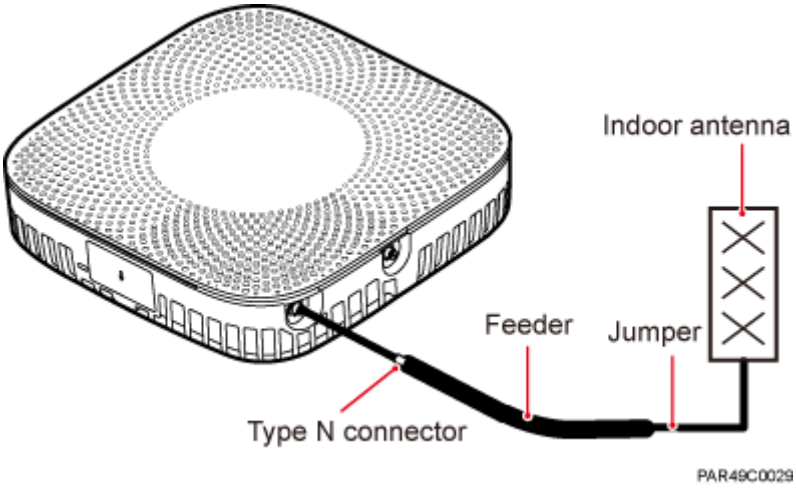

----End

Follow-up Procedure

1. Route the cable, and then use a cable tie to bind the cable. For details, see 7.5.1 Requirements for Cable Layout.
2. Label the installed cable. For details, see section 15.4 Attaching an L-Shaped Label.

7.6 Checking the pRRU3901 Hardware Installation

pRRU3901 hardware installation checking includes hardware and cable installation checking.

Table 7-9 lists the hardware installation checking items.

Table 7-9 Hardware installation checking list

No.	Item
1	Ensure that the pRRU3901 is not grouned.
2	The position for each device conforms to the engineering design and meets the space requirement.
3	Ensure that the pRRU3901 is properly installed.
4	The surface of the pRRU3901 is neat and clean. The external paint is intact. The labels, tags, and nameplates are correct, legible, and complete.

Table 7-10 lists the check items of the signal cable connection.

Table 7-10 Checklist for the signal cable connection

No.	Item

Copyright © Huawei Technologies Co., Ltd.

No.	Item
1	The connectors of the signal cables must securely connected.
2	The connectors of the signal cables are intact.
3	The signal cables are intact.
4	The cable ties are evenly spaced. The signal cables are bound neatly with cable ties to proper tightness, and arranged at even intervals in the same direction.
5	The extra length of the cable ties is cut and removed. The cut surfaces of the indoor cables are smooth and have no sharp edges.
6	The cable layout facilitates maintenance and expansion.
7	Correct and clear labels are attached to both ends of the signal cables.

Table 7-11 lists the checking items for other cable connections.

Table 7-11 Checklist for other cable connections

No.	Item
1	The connectors of the other cables must securely connected.
2	Labels on the cables are legible and bound based on the engineering requirements. The cables must be bound tightly and neatly. The sheaths of the cables must not be damaged.
3	Positions for routing the cables must meet requirements of the engineering design.

7.7 Powering on the pRRU3901

This section describes the power-on check on the pRRU3901 after the pRRU3901 hardware is installed and checked.

Context

After the RHUB and pRRUs are installed and connected to each other, power on them no matter whether the BBU is installed.

Procedure

Step 1 Power on the pRRU3901. Wait 3 to 5 minutes, check the status of the RUN indicator on the pRRU3901.

If the RUN Indicator...	Because...	Then...
Steady on	There is power input, but the	Power off the power supply,

Copyright © Huawei Technologies Co., Ltd.

If the RUN Indicator...	Because...	Then...
	board is faulty.	rectify the fault, and power on the pRRU3901.
Steady off	There is no power input, or an alarm is reported on the board.	Power off the power supply and check the power input. If no fault is found after the pRRU3901 is powered off, clear the fault on the board, and power on the pRRU3901.
On for 1s and off for 1s	The device works properly.	End this operation.
On for 0.125s and off for 0.125s	The software of the board is loading.	Wait five minutes for the software to be successfully loaded. If the software is loading five minutes later, shut off the power supply. Check whether the data configuration file is correct. After the fault is rectify, power on the pRRU3901 again.

NOTE

Check the indicator status 30 minutes after the power-on if a pRRU is not connected to any BBU. The pRRU is considered normally powered on when any indicator on the pRRU is on.

----End

Copyright © Huawei Technologies Co., Ltd.

8 Installing a pRRU3902 or pRRU3911 or pRRU3911+WIFI

About This Chapter

This chapter describes the pRRU3902/pRRU3911/pRRU3911+WIFI installation process. The pRRU3902 and pRRU3911/pRRU3911+WIFI are installed in similar way, and this chapter uses the pRRU3902 as an example.

8.1 Information About the Installation

This section describes the information that you must be familiar with before installing a pRRU, including product family, installation scenarios, installation space and environment requirements.

8.2 Installation Process

This section describes the pRRU installation process, which involves installing a pRRU, and cables, checking the pRRU hardware installation, and powering on the pRRU.

8.3 Installing a pRRU

This section describes the pRRU installation process. A pRRU can be installed on a wall, ceiling, indoor metal pole, or keel, but not on an aluminum panel or a non-standard keel.

8.4 Installing pRRU Cables

This section describes the procedure of installing the pRRU cables.

8.5 (Optional) Installing a Combiner

This section describes how to install a combiner. The pRRU3902 using external antennas must be configured with a combiner.

8.6 Checking the pRRU Hardware Installation

pRRU hardware installation checking includes hardware and cable installation checking.

8.7 Powering on the pRRU

This section describes the power-on check on the pRRU after the pRRU hardware is installed and checked.

Copyright © Huawei Technologies Co., Ltd.

8.1 Information About the Installation

This section describes the information that you must be familiar with before installing a pRRU, including product family, installation scenarios, installation space and environment requirements.

8.1.1 Product Family

This chapter describes the configurations and functions of the pRRU components.

Table 8-1 lists the pRRU product family.

Table 8-1 pRRU product family

Product Type	Category	Equipment	Optional or Mandatory	Quantity	Function
pRRU3902	Main equipment	pRRU3902 with internal antennas	Mandatory	1	Functions as a remote radio unit that processes RF signals.
		pRRU3902 supporting external antennas	Mandatory	1	Functions as a remote radio unit that processes RF signals. It has no internal antennas and must connect to external antennas.
		Combiner	Optional	2	Combines signals of RF units operating in different frequency bands.
	Auxiliary device	Mounting kits	Mandatory	1	Supports the pRRU3902 installation on a wall, ceiling, keel, or steel hangers. The mounting

Copyright © Huawei Technologies Co., Ltd.

Product Type	Category	Equipment	Optional or Mandatory	Quantity	Function
					kits vary with the pRRU3902 installation mode.
		Cabinet	Optional	• None and one Extender is needed • Yes and two Extenders are needed	Install the pRRU3902 and Extender in the outdoor scenario.
		Extender	Optional	1 or 2 **NOTE** The quantity depends on the number of Ethernet cables in use.	Extends the distance between the pRRU3902 and RHUB.
pRRU3911/pRRU3911+WIFI	Main equipment	pRRU3911	Mandatory	1	Functions as a remote radio unit that processes RF signals.
		pRRU3911+WIFI	Mandatory	1	Functions as a remote radio unit that processes RF signals.
	Auxiliary device	Mounting kits	Mandatory	1	Supports the pRRU3911/pRRU3911+WIFI installation on a wall, ceiling, keel, or steel hangers. The mounting kits vary with the installation mode.

Copyright © Huawei Technologies Co., Ltd.

Product Type	Category	Equipment	Optional or Mandatory	Quantity	Function
		Extender	Optional	1 or 2 **NOTE** The quantity depends on the number of Ethernet cables in use.	Extends the distance between the pRRU3911/ pRRU3911 +WIFI and RHUB.

8.1.2 Installation Scenario

The pRRU can be installed on a wall, ceiling, keel, or steel hangers. The following table describes the installation in different scenarios.

Installing on a wall

NOTE

- The pRRU must keep a minimum of 0.5 m away from the power equipment with interference, and keep a minimum of 2 m away from the source with radiation.
- The pRRU must keep away from a metal wall to avoid the impact on the antenna performance.

When a pRRU is installed on a wall, installation modes vary with the quality of wall, as shown in Table 8-2.

Table 8-2 Wall-mounted suggestion

Installation Mode	Requirements	Mounting Brackets	Installation Diagram
Installing the pRRU on a wall by drilling holes For details, see 8.3.2 Installing a pRRU on a Wall.	• The wall can bear a load at least four times the weight of a pRRU. • The screws must be tightened with a torque of 1.5 N·m. This ensures the screws work properly and the wall remains intact without cracks in it.	1. Plate 2. Screw (M3.5x35) 3. Plastic expansion sleeve 4. Flat washer 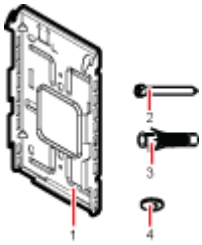	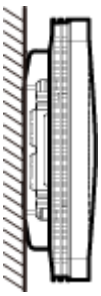

Copyright © Huawei Technologies Co., Ltd.

Installation Mode	Requirements	Mounting Brackets	Installation Diagram
Installing the pRRU on a wall using a clamp through an attachment plate For details, see 8.3.5 Installing a pRRU on a Plate.	• The wall can bear a load at least four times the weight of a pRRU. • The thickness of the wall is less than 45 mm.	1. Plate 2. Clamp 3. Bolt (M4x35) 4. Bolt (M4x60) 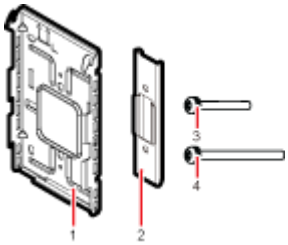	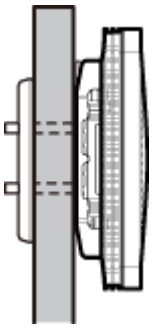
Installing the pRRU on a wall using a plate on a metal wall	The wall cannot bear a load at least four times the weight of the pRRU. For example, EPS walls, MDF walls, or walls cannot be drilled.	The plate is prepared by customers.	

Installing on a ceiling

When a pRRU is installed on a ceiling, installation modes vary with the quality of the ceiling, as shown in Table 8-3.

Table 8-3 Ceiling-mounted suggestion

Installation Mode	Requirements	Mounting Brackets	Installation Diagram
Installing the pRRU on a ceiling by drilling holes For details, see 8.3.3 Installing a pRRU on a Ceiling.	• The ceiling, such as a concrete ceiling, can bear a load at least four times the weight of the pRRU. • The screws must be tightened with a torque of 1.5 N·m. This ensures the screws work properly and the ceiling remains	1. Plate 2. Screw (M3.5 x 35) 3. Plastic expansion sleeve 4. Flat washer 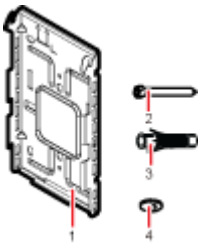	

Copyright © Huawei Technologies Co., Ltd.

Installation Mode	Requirements	Mounting Brackets	Installation Diagram
	intact without cracks in it.		
Installing the pRRU on a ceiling using a clamp through an attachment plate For details, see 8.3.5 Installing a pRRU on a Plate.	• The ceiling, such as a concrete ceiling, can bear a load at least four times the weight of the pRRU. • The thickness of the ceiling is less than 45 mm.	1. Plate 2. U-shaped metal plate 3. Bolt (M4 x 35) 4. Bolt (M4 x 60) 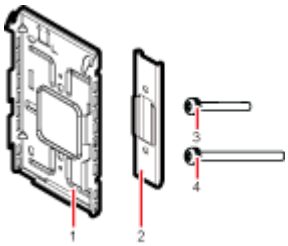	
Installing the pRRU on a keel For details, see 8.3.6 Installing a pRRUon a Keel.	A keel under the ceiling can bear a load at least four times the weight of the pRRU.	For details, see Table 8-5.	For details, see Table 8-5.

Installation on a pole

To install a pRRU on a pole, use small hose clamps with a diameter ranging from 60 mm to 114 mm or larger hose clamps with a diameter ranging from 114 mm to 381 mm.

Table 8-4 Pole-mounted installation suggestion

Installation Mode	Requirements	Mounting Brackets	Installation Diagram
Installing the pRRU on a pole For details, see 8.3.4 Installing a pRRU on a Pole.	The pole diameter ranges from 60 mm to 114 mm or from 114 mm to 381 mm	1. Plate 2. Hose clamp (prepared by customer) 	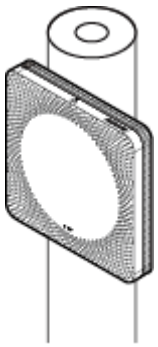

Copyright © Huawei Technologies Co., Ltd.

Installing on a keel

The pRRU can be installed on a keel of U-shape, T-shape, or H-shape. For the keels of other shapes, they are determined based on the onsite requirements.

Table 8-5 Keel-mounted installation suggestion

Installation Mode	Requirements	Mounting Brackets	Installation Diagram
Installing the pRRU on a keel For details, see 8.3.6 Installing a pRRUon a Keel.	The keel is in U-shape, T-shape, H-shape, or other shapes.	1. Plate 2. U-shaped metal plate 3. Bolt (M4 x 35) 4. Bolt (M4 x 60) 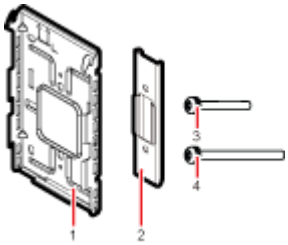	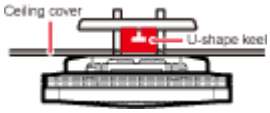 shows the pRRU installed on a U-shaped keel.

Installing on a on steel hangers

Either M6 or M8 steel hangers can be used for installation.

Table 8-6 Steel hangers installation suggestion

Installation Mode	Requirements	Mounting Brackets	Installation Diagram
Installing the pRRU on a steel hangers For details, see 8.3.7 Installing a pRRU on Steel Hangers.	Either M6 or M8 steel hangers can be used for installation.	1. Plate 2. U-shaped metal plate 3. Bolt (M4 x 35) 4. Bolt (M4 x 60) 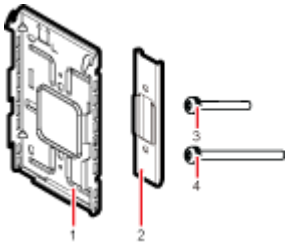	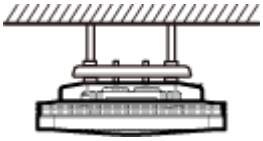

Cabinet

In the outside scenario, pRRU3902 should be installed in the cabinet.

Copyright © Huawei Technologies Co., Ltd.

Table 8-7 Cabinet installation suggestion

Installation Mode	Requirements	Mounting Brackets	Installation Diagram
Installing the cabinet For details, see 8.3.8 Installing the Cabinet.	–	1. Plate 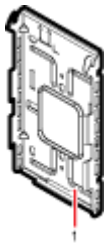	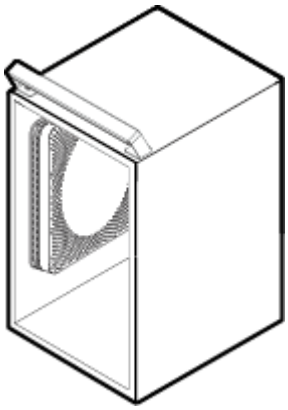

8.1.3 Space Requirements

This chapter describes the space requirements of the pRRU.

When the pRRU is installed on a wall, ceiling, pole or keel, the minimum space is required for easy cabling and O&M. Based on the engineering practice, the recommendation for the installation space is provided.

Figure 8-1 shows the recommended space requirements of the pRRU when the external antenna is required.

Figure 8-1 Recommended space requirements

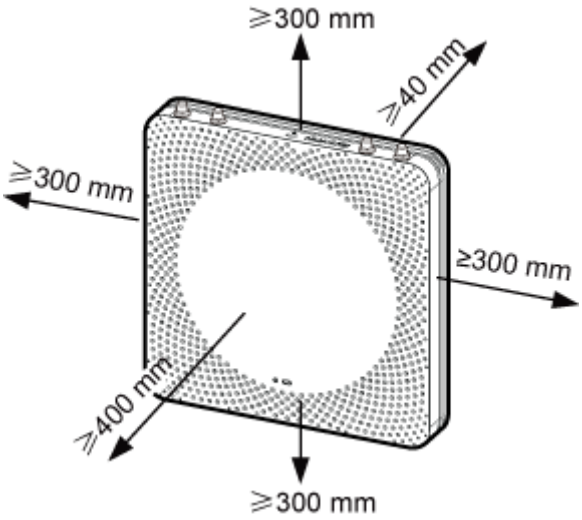

When the external antenna is required, the recommended space for installing a single pRRU is described as follows:

- At least 300 mm above the pRRU is reserved for maintenance.

Copyright © Huawei Technologies Co., Ltd.

- At least 300 mm under the pRRU is reserved for cabling.
- At least 300 mm on the left of the pRRU is reserved for maintenance.
- At least 300 mm on the right of the pRRU is reserved for maintenance.
- At least 400 mm in front of the pRRU is reserved for maintenance
- At least 40 mm on the back of the pRRU is reserved for ventilation.

In the outdoor scenario, there is no space requirement for the pRRU3902 installing in the cabinet.

8.1.4 Installation Environment Requirements

The installation environment of a pRRU involves the running environment specifications for the pRRU and other specifications.

Running Environment Specifications

Table 8-8 shows the environment specifications for the pRRU installed indoors.

Table 8-8 environment specifications

Specifications	Condition	Remarks
Operating temperature	• Indoor: - 5 °C to + 40 °C • Outside: - 20 °C to + 40 °C	-
Relative humidity	5% RH to 95% RH	-
Altitude	- 60 m to + 1800 m	Works properly.
	1800 m to 4000 m	Above the 1800 m altitude, the maximum operating temperature decreases by 1°C each time the altitude increases by 220 m.

Other Running Environment Specifications

- The pRRU cannot be installed at an air outlet of the heat dissipation box of an air conditioner or other heat-generating appliances.
- The pRRU cannot be installed near a strong heat source.
- The pRRU cannot be installed in a position with water dripping, such as outdoor equipment of air conditioners, pipe, and leaking or dripping roofs.
- The installation position must be far from rains. If the pRRU is installed on a wall, there must be no window on either side of the wall.
- The installation position must be far away from high voltage, highly corrosive devices, flammable or explosive substances, and electromagnetic interference such as power stations, high-voltage substations, and wired TV towers.
- The pRRU must be installed in a dry, ventilating, and dust-proof place.

Copyright © Huawei Technologies Co., Ltd.

- If the pRRU is installed in parking areas or basements, the installation position must be well-ventilated.

8.2 Installation Process

This section describes the pRRU installation process, which involves installing a pRRU, and cables, checking the pRRU hardware installation, and powering on the pRRU.

Figure 8-2 shows the pRRU installation process.

Figure 8-2 Installation process

Copyright © Huawei Technologies Co., Ltd.

8.3 Installing a pRRU

This section describes the pRRU installation process. A pRRU can be installed on a wall, ceiling, indoor metal pole, or keel, but not on an aluminum panel or a non-standard keel.

NOTE

Note the following when installing the pRRU:

- The pRRU cannot be grounded. If the pRRU is grounded but the RHUB connected to this pRRU is not, the pRRU may fail to be powered on.
- A minimum distance of 50 cm must be reserved between the pRRU and the incandescent lamp.
- The installation spacing between the pRRU and the temperature sensor must be greater than 50 cm.
- It is good practice to install the pRRU on materials that can tolerate a temperature higher than 65°C and have an ignition point higher than 70°C.

8.3.1 Mounting Kits

This section describes the pRRU mounting kits.

Figure 8-3 shows the exterior of the pRRU mounting kits.

Figure 8-3 Mounting kits

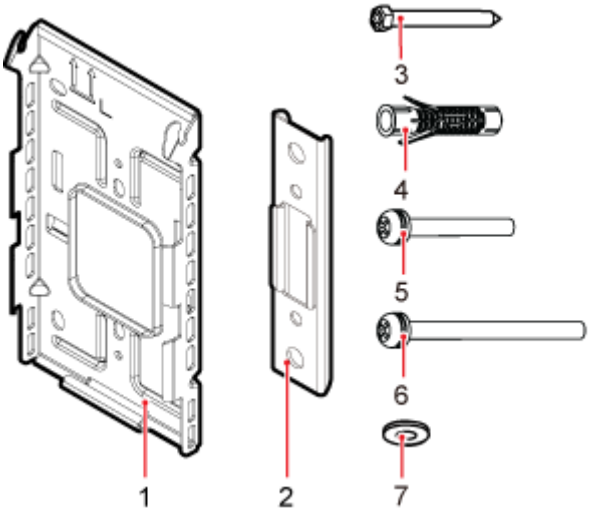

(1) Mounting bracket	(2) U-shaped metal plate	(3) Screw (3.5X35)
(4) Plastic expansion sleeve	(5) Bolt (M4X35)	(6) Bolt (M4X60)
(7) Flat washer	–	–

Figure 8-4, Figure 8-5 show the specifications of the mounting bracket.

Copyright © Huawei Technologies Co., Ltd.

Figure 8-4 Mounting bracket specifications

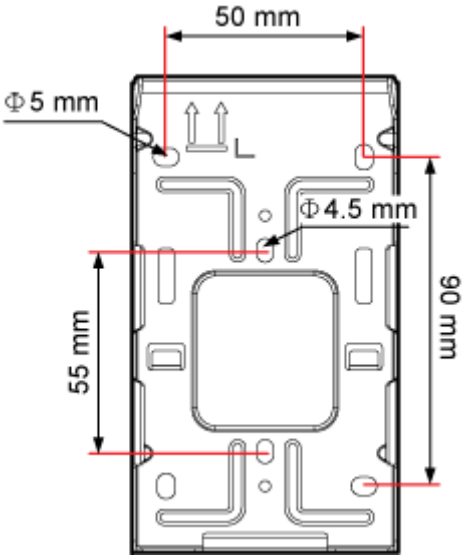

Figure 8-5 U-shaped metal plate specifications

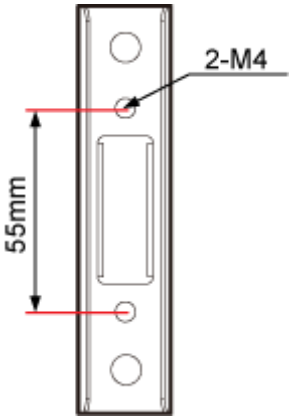

8.3.2 Installing a pRRU on a Wall

This section describes how to install a pRRU on an indoor wall. If a wall indoors has adequate load bearing capacity and installation space, it is good practice to install the pRRU on the wall. If the wall does not have adequate load bearing capacity, choose an installation mode based on site requirements.

Context

NOTE

This section describes only the wall-mounted installation in which mounting kits are directly installed on the wall without auxiliary devices. The procedure for other wall-mounted installation modes is similar.

Copyright © Huawei Technologies Co., Ltd.

Procedure

Step 1 Determine the position for installing the pRRU based on the construction blueprint and the clearance requirements.

NOTE
For details about the clearance requirements, see 8.1.3 Space Requirements.

Step 2 Place the mounting bracket in the installation position against the wall. Then, level the mounting bracket and use a marker to mark four anchor points. See Figure 8-6.

Figure 8-6 Anchor points on the pRRU mounting bracket

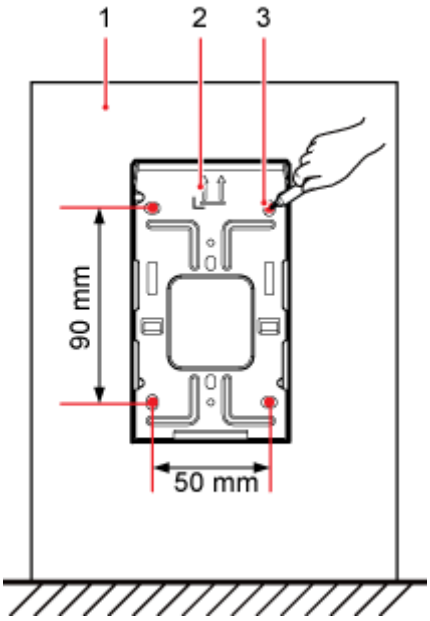

(1) Wall (2) Mounting bracket (3) Anchor point

NOTE
To prevent inhalation or eye contact with dust, take adequate preventive measures when drilling holes.

Step 3 Use a hammer drill with φ6 bore to drill holes at the marked anchor points, as shown in Figure 8-7. Use a vacuum cleaner to clean the dust inside and around the holes and measure the distance between them. If they are inaccurately positioned, re-measure and re-drill the holes. Then, use a rubber mallet to hit a plastic expansion sleeve into each hole.

Copyright © Huawei Technologies Co., Ltd.

Figure 8-7 Drilling holes and installing expansion bolts

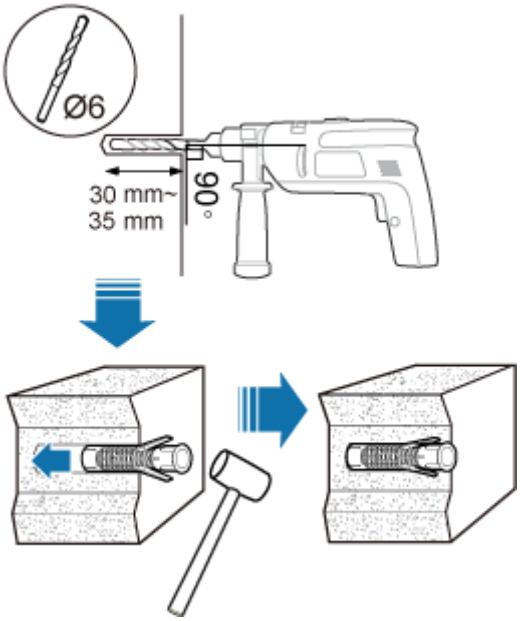

Step 4 Lead the M3.5x35 screws through the washers, and then through the drilling holes on the mounting bracket to the plastic expansion sleeves, and torque the screws to 1.2 N•m, as shown in Figure 8-8.

Figure 8-8 Installing the mounting bracket

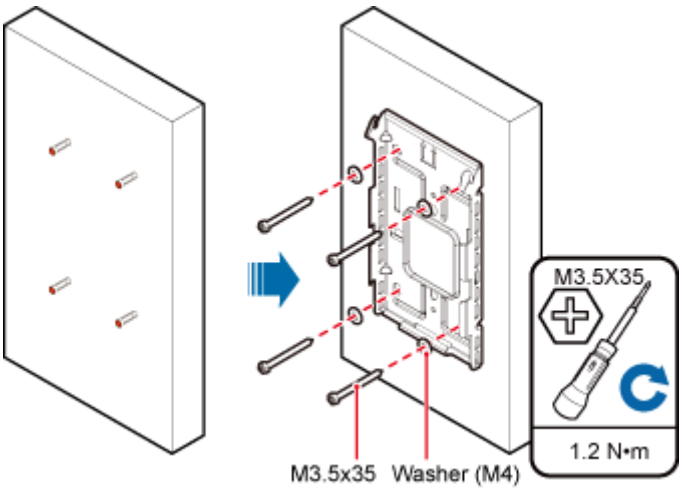

NOTE

If the screws cannot be tightened using a Phillips screwdriver, use a hex key or an electric screwdriver to assist the installation.

Step 5 Fit the rotation axis on the pRRU into the hooks on the mounting bracket, and then push the pRRU against the mounting bracket until a click is heard. See Figure 8-9.

Copyright © Huawei Technologies Co., Ltd.

Figure 8-9 Installing a pRRU on a wall

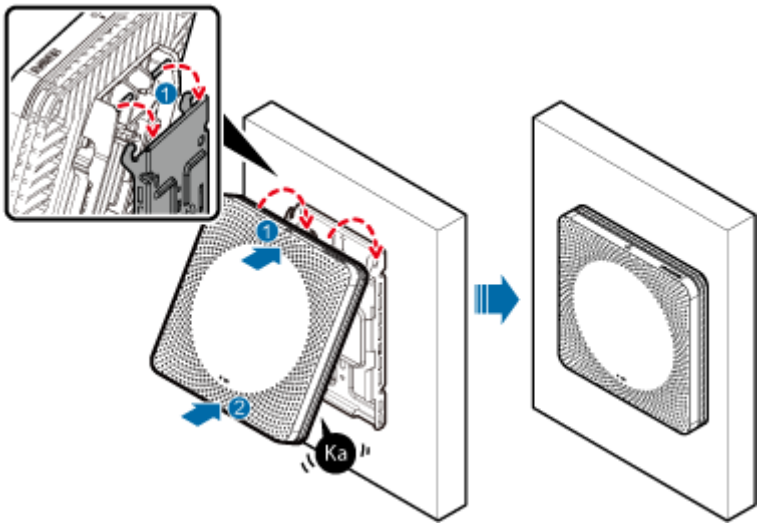

NOTE

- Before installing the pRRU, connect one end of the Ethernet cable to the CPRI_E0 port on pRRU.
- It is good practice to perform the installation from the side view to promptly align the hooks with the rotation axis.

Step 6 **Optional:** Use T20 with hole screwdriver to lock the protection screw on the attachment plate. See Figure 8-10.

The protection screw protects the pRRU from being removed and must be locked if required.

Figure 8-10 Locking the protection screw

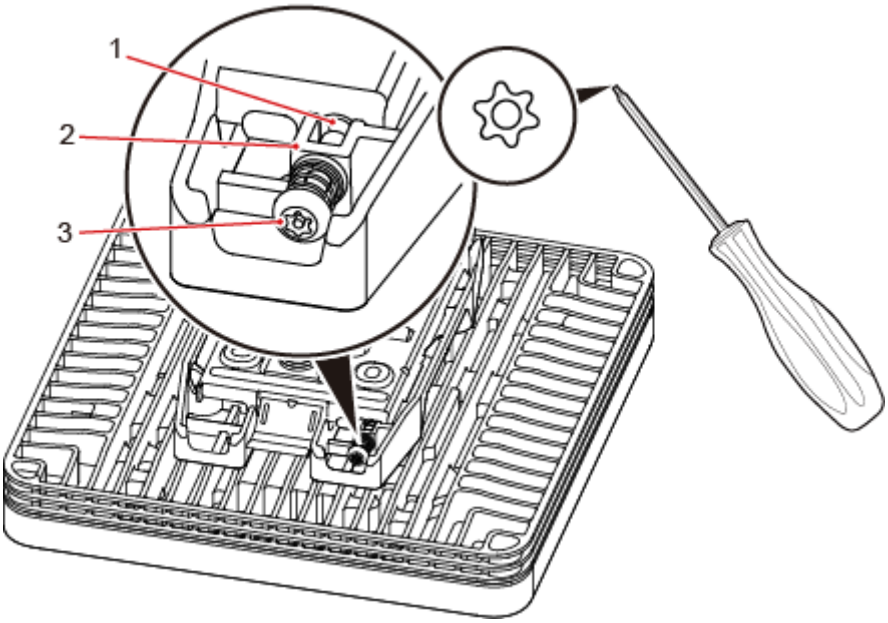

(1) M4 threaded hole (2) Hole for self-tapping screws (3) Quincunx screw

Copyright © Huawei Technologies Co., Ltd.

----End

8.3.3 Installing a pRRU on a Ceiling

This section describes how to install a pRRU on the ceiling, such as the concrete ceiling, when the ceiling has adequate load bearing capacity and installation space.

Context

NOTE

If the pRRU is installed on a ceiling, the temperature of the ceiling may increase by a maximum of 30 degrees. Therefore, whether a pRRU can be installed on a ceiling depends on the ceiling material.

Procedure

Step 1 Determine the position for installing the pRRU based on the construction blueprint and the clearance requirements.

NOTE

For details about the clearance requirements, see 8.1.3 Space Requirements.

Step 2 Place the mounting bracket in the installation position against the ceiling. Then, level the mounting bracket and use a marker to mark four anchor points. See Figure 8-11.

Figure 8-11 Anchor points on the pRRU mounting bracket

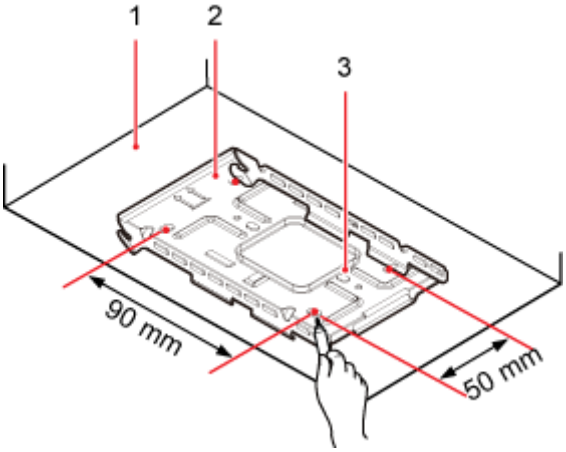

(1) Ceiling (2) Mounting bracket (3) Anchor point

NOTE

To prevent inhalation or eye contact with dust, take adequate preventive measures when drilling holes.

Step 3 Use a hammer drill with φ6 bore to drill holes at the marked anchor points, as shown in Figure 8-12. Use a vacuum cleaner to clean the dust inside and around the holes and measure the distance between them. If they are inaccurately positioned, re-measure and re-drill the holes. Then, use a rubber mallet to hit a plastic expansion sleeve into each hole.

Copyright © Huawei Technologies Co., Ltd.

Figure 8-12 Drilling holes and installing expansion bolts

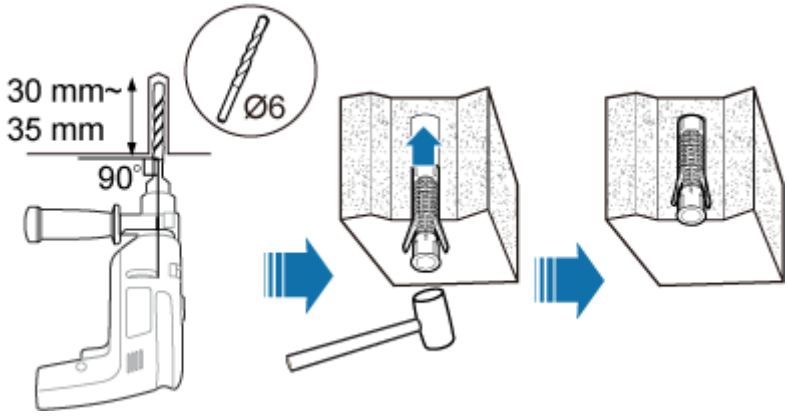

Step 4 Lead the M3.5x35 screws through the washers, and then through the drilling holes on the mounting bracket to the plastic expansion sleeves, and use a torque screwdriver to torque the screws to 1.2 N•m, as shown in Figure 8-13.

Figure 8-13 Installing the mounting bracket

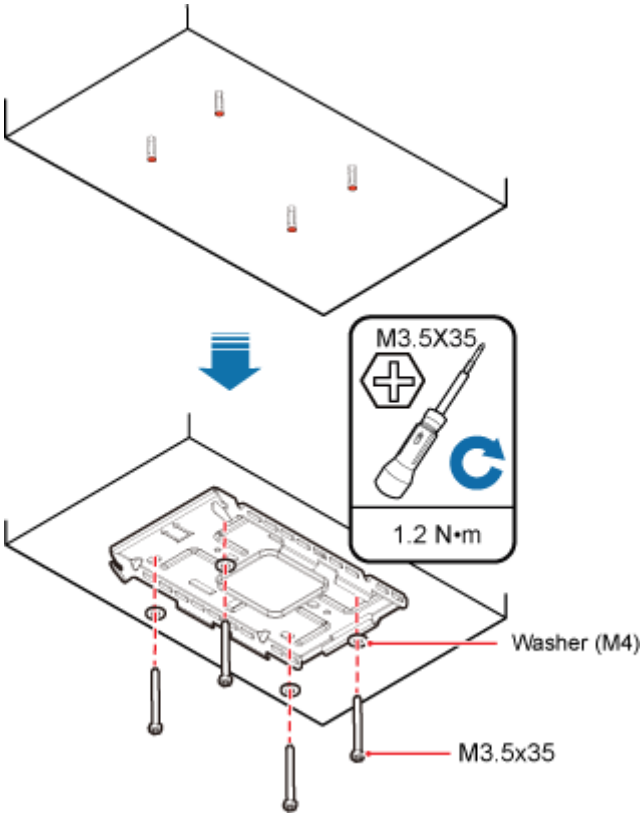

NOTE

If the screws cannot be tightened using a Phillips screwdriver, use a hex key or an electric screwdriver to assist the installation.

Step 5 Fit the rotation axis on the pRRU into the hooks on the mounting bracket, and then push the pRRU against the mounting bracket until a click is heard. See Figure 8-14.

Copyright © Huawei Technologies Co., Ltd.

Figure 8-14 Installing a pRRU on a ceiling

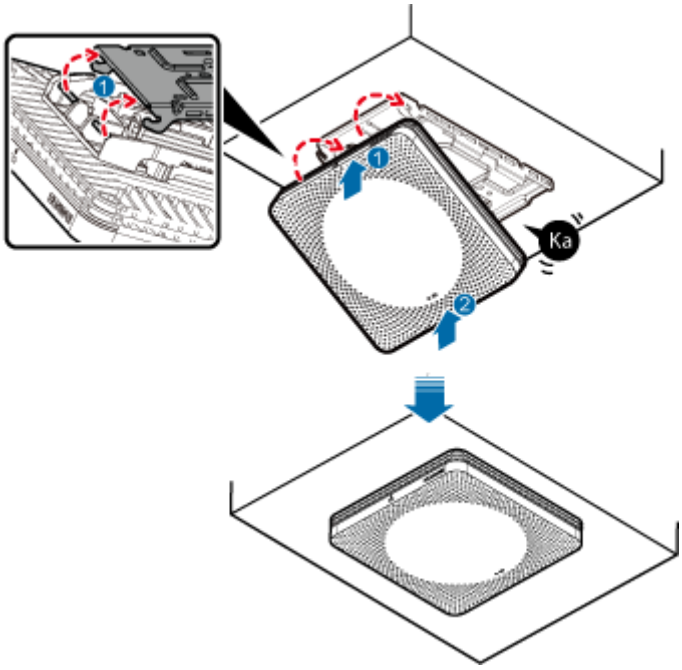

NOTE

- Before installing the pRRU, connect one end of the Ethernet cable to the CPRI_E0 port on pRRU.
- It is good practice to perform the installation from the side view to promptly align the hooks with the rotation axis.

Step 6 **Optional:** Use T20 with hole screwdriver to lock the protection screw on the attachment plate. See Figure 8-15.

The protection screw protects the pRRU from being removed and must be locked if required.

Copyright © Huawei Technologies Co., Ltd.

Figure 8-15 Locking the protection screw

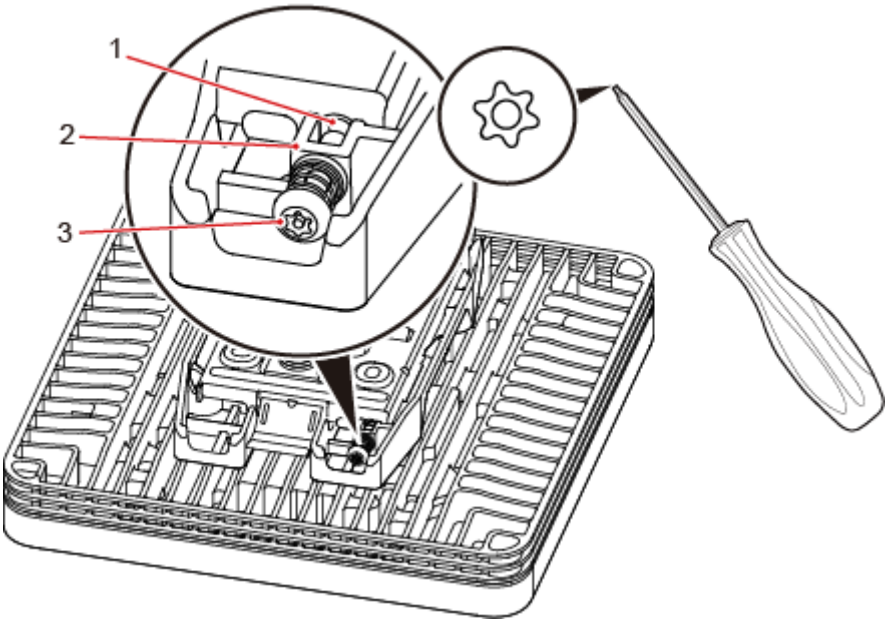

(1) M4 threaded hole (2) Hole for self-tapping screws (3) Quincunx screw

----End

8.3.4 Installing a pRRU on a Pole

This section describes how to install a pRRU on a metal pole indoors.

Procedure

Step 1 Determine the position for installing the pRRU based on the construction blueprint and the pRRU installation clearance requirements.

NOTE
For details about the clearance requirements, see 8.1.3 Space Requirements.

Step 2 Secure the pRRU mounting bracket on the metal pole, as shown in Figure 8-16.

Copyright © Huawei Technologies Co., Ltd.

Figure 8-16 Securing the pRRU mounting bracket on the metal pole

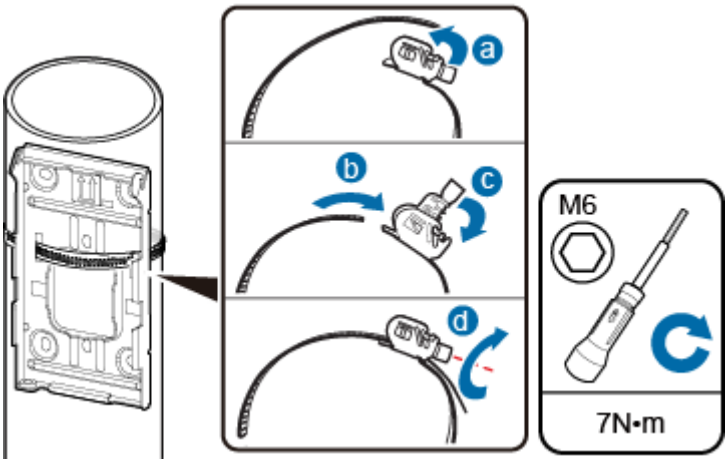

1. Determine a position for installing the pRRU. Then, place the separate mounting kit onto the pole, thread the hose clamp through the mounting kit, and encircle the pole with the hose clamp, as shown by illustrations a, b, and c in Figure 8-16.
2. Use an M6 inner hexagon screwdriver to tighten the bolt on each hose clamp to 5 N·m to secure the mounting kit, as shown by illustration d in Figure 8-16.

Step 3 Fit the four hooks of the pRRU into the mounting holes on the mounting bracket and then press the pRRU downwards until a click is heard. See Figure 8-17.

NOTE

- It is good practice to connect one end of an Ethernet cable to the CPRI_E0 port on the pRRU before the pRRU is installed.
- It is good practice to perform the installation from the side view to promptly align the hooks with the mounting holes.

Figure 8-17 Installing the pRRU on a pole

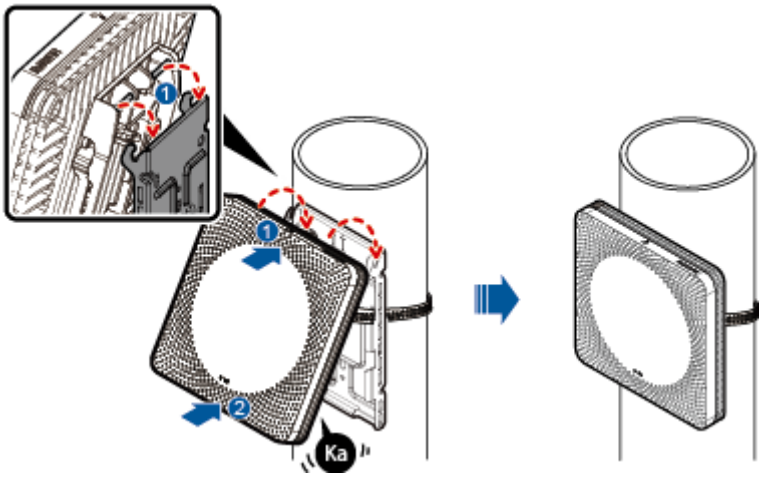

----End

Copyright © Huawei Technologies Co., Ltd.

8.3.5 Installing a pRRU on a Plate

This section describes how to install a pRRU on a plate. If a suspended ceiling plate has adequate load bearing capacity and installation space, the pRRU can be installed on the plate. However, it is good practice not to install a pRRU on an aluminum plate. The installation modes are classified into installation on a removable suspended ceiling plate and installation on an overall suspended ceiling.

Procedure

- Installation on a removable suspended ceiling plate

  This installation mode applies when the suspended ceiling plate (for example, a metal plate) is removable.

  a. Determine the position for installing the pRRU based on the construction blueprint and the clearance requirements.

NOTE

For details about the clearance requirements, see 8.1.3 Space Requirements.

  b. Place the mounting bracket in the installation position against the wall. Then, level the mounting bracket and use a marker to mark two anchor points. See Figure 8-18.

Figure 8-18 Anchor points on the pRRU mounting bracket

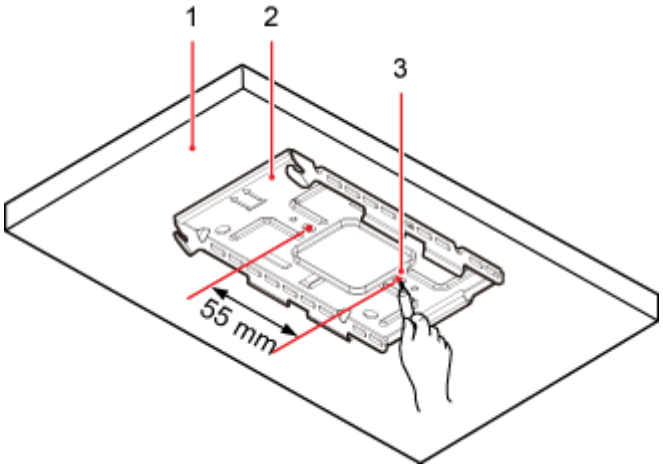

(1) Suspended ceiling plate (2) Mounting bracket (3) Anchor point

NOTE

To prevent inhalation or eye contact with dust, take adequate preventive measures when drilling holes.

  c. Use a hammer drill with φ6 bore to drill holes at the anchor points.

  d. Lead two bolts (M4) through the mounting bracket and the suspended ceiling plate, and use a torque screwdriver to torque the bolts to 1.4 N•m, as shown in Figure 8-19.

Copyright © Huawei Technologies Co., Ltd.

Figure 8-19 Installing the pRRU mounting bracket

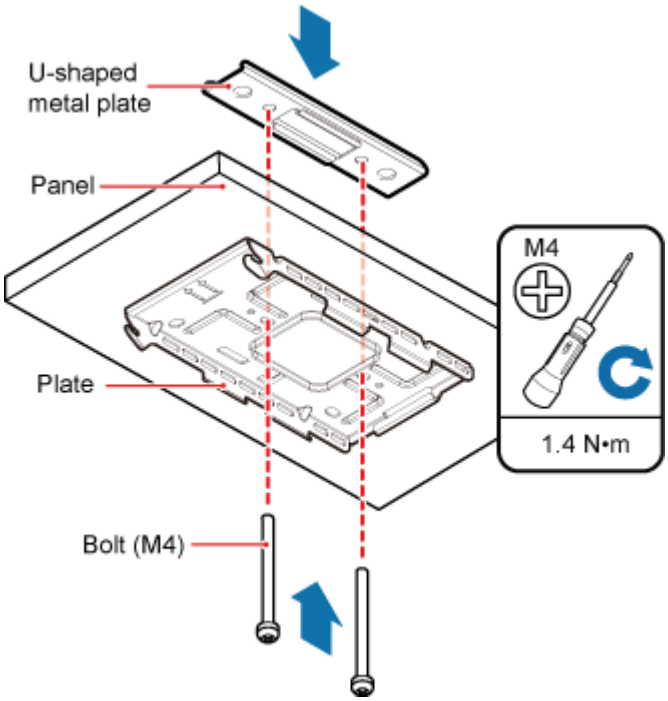

NOTE

- The bolt used for installing the pRRU on a suspended ceiling plate depends on the plate thickness:
- The delivered bolt (M4x35) is used if the plate thickness is less than 25 mm.
- The delivered bolt (M4X60) is used if the plate thickness ranges from 25 mm to 45 mm.
- If the screws cannot be tightened using a Phillips screwdriver, use a hex key or an electric screwdriver to assist the installation.

e. Fit the rotation axis on the pRRU into the hooks on the mounting bracket, and then push the pRRU against the mounting bracket until a click is heard. See Figure 8-20.

Copyright © Huawei Technologies Co., Ltd.

Figure 8-20 Installing a pRRU on a plate

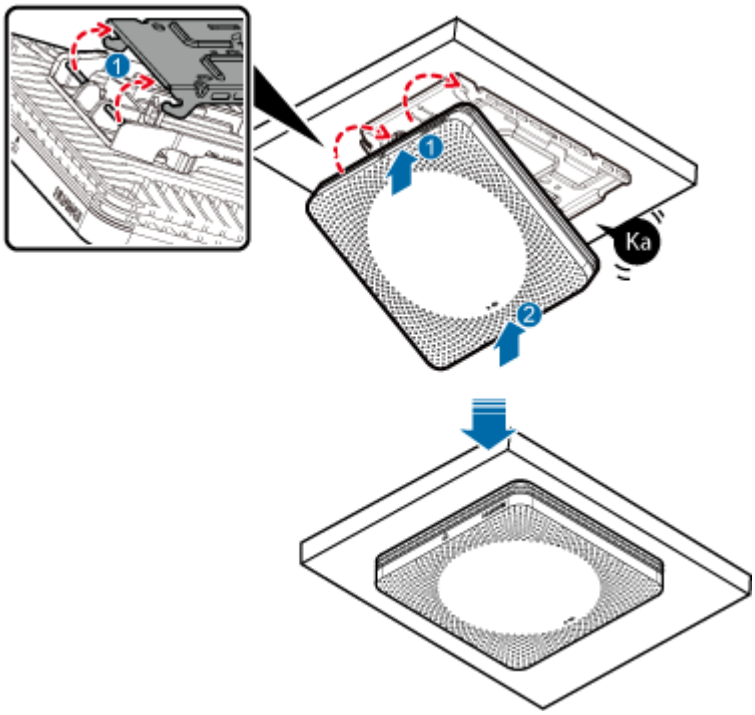

NOTE

If the screws cannot be tightened using a Phillips screwdriver, use a hex key or an electric screwdriver to assist the installation.

f. Use T20 with hole screwdriver to lock the protection screw on the attachment plate. See Figure 8-21.

   The protection screw protects the pRRU from being removed and must be locked if required.

Copyright © Huawei Technologies Co., Ltd.

Figure 8-21 Locking the protection screw

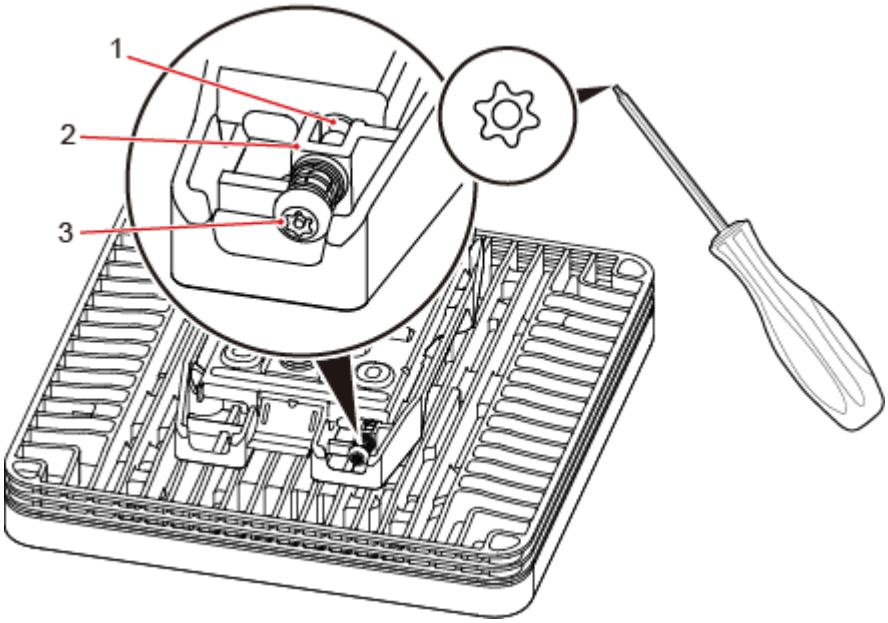

(1) M4 threaded hole (2) Hole for self-tapping screws (3) Quincunx screw

- Installation on an overall suspended ceiling

  This installation mode applies when the suspended ceiling (for example, made of plaster board) cannot be removed.

  a. Determine the position for installing the pRRU based on the construction blueprint and the clearance requirements.

NOTE

For details about the clearance requirements, see 8.1.3 Space Requirements.

  b. Use a crown saw to drill a hole with a diameter of 60 mm to 65 mm at the installation position for the pRRU, as shown in Figure 8-22.

Copyright © Huawei Technologies Co., Ltd.

Figure 8-22 Drilling holes by using a crown saw

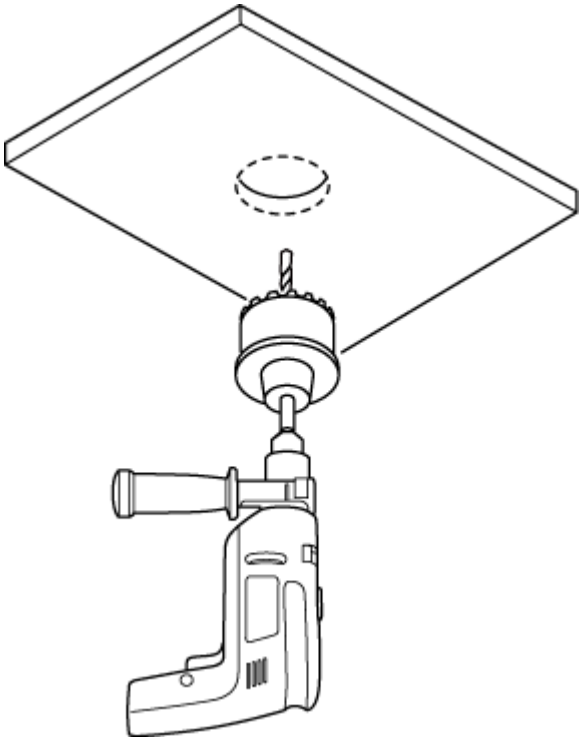

NOTE

To prevent inhalation or eye contact with dust, take adequate preventive measures when drilling holes.

c. Use a bolt (M4) to partially connect the mounting bracket and the U-shaped metal plate, as shown in Figure 8-23.

Figure 8-23 Partially connecting the mounting bracket and the U-shaped metal plate

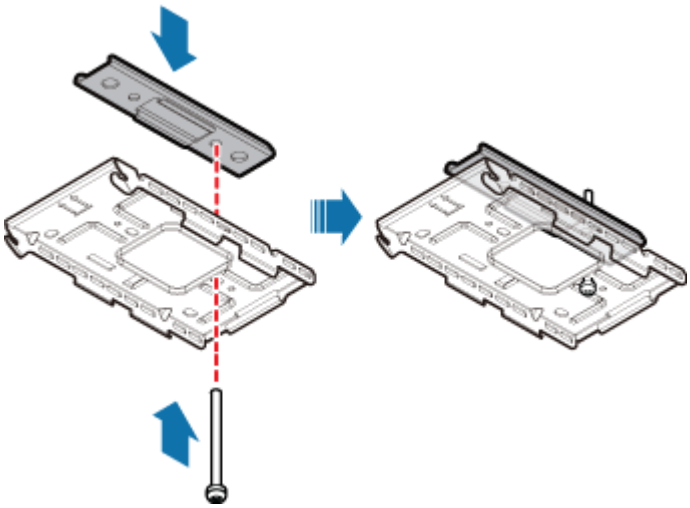

NOTE

The bolt used for installing the pRRU on a suspended ceiling plate depends on the plate thickness:

- The delivered bolt (M4x35) is used if the plate thickness is less than 25 mm.

Copyright © Huawei Technologies Co., Ltd.

- The delivered bolt (M4X60) is used if the plate thickness ranges from 25 mm to 45 mm.

d. Lead the U-shaped metal plate through the hole on the ceiling, as shown in Figure 8-24.

Figure 8-24 Routing the U-shaped metal plate through the hole on the ceiling

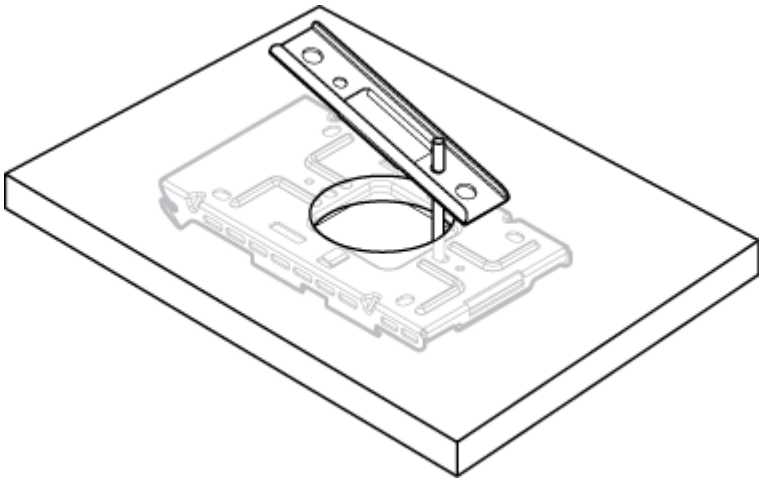

e. Install another bolt with the same length and use a torque screwdriver to torque the bolts to 1.4 N·m, as shown in Figure 8-25.

Figure 8-25 Assembling the mounting bracket and the U-shaped metal plate

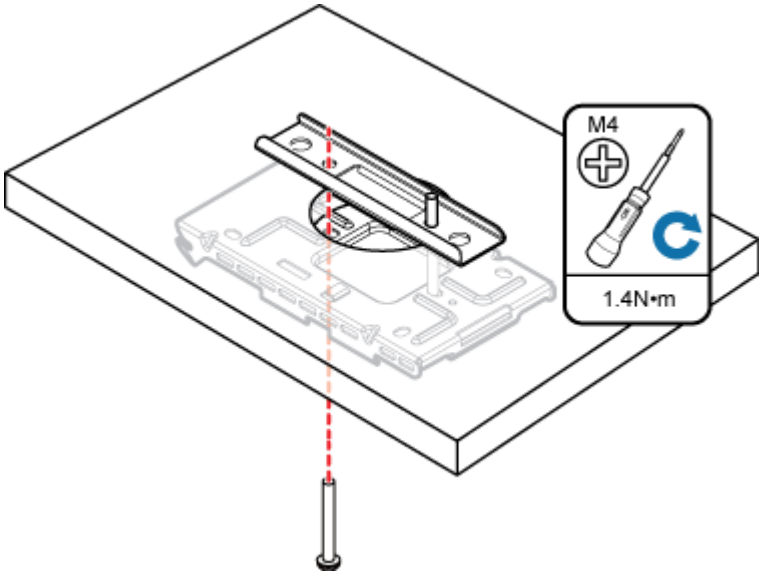

NOTE

If the screws cannot be tightened using a Phillips screwdriver, use a hex key or an electric screwdriver to assist the installation.

f. Fit the rotation axis on the pRRU into the hooks on the mounting bracket, and then push the pRRU against the mounting bracket until a click is heard. See Figure 8-26.

Copyright © Huawei Technologies Co., Ltd.

Figure 8-26 Installing a pRRU on a plate

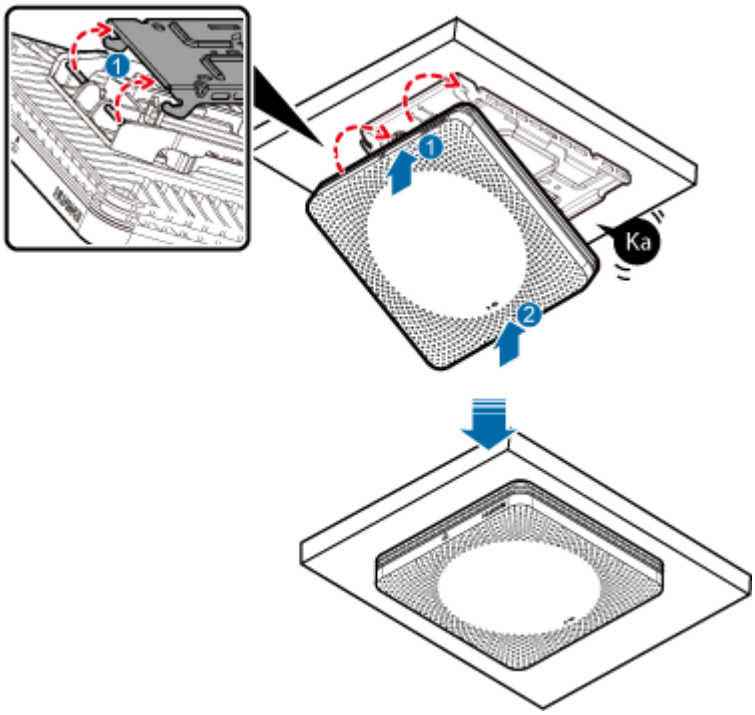

NOTE

- Before installing the pRRU, connect one end of the Ethernet cable to the CPRI_E0 port on pRRU.
- It is good practice to perform the installation from the side view to promptly align the hooks with the rotation axis.

g. Use T20 with hole screwdriver to lock the protection screw on the attachment plate. See Figure 8-27.

   The protection screw protects the pRRU from being removed and must be locked if required.

Copyright © Huawei Technologies Co., Ltd.

Figure 8-27 Locking the protection screw

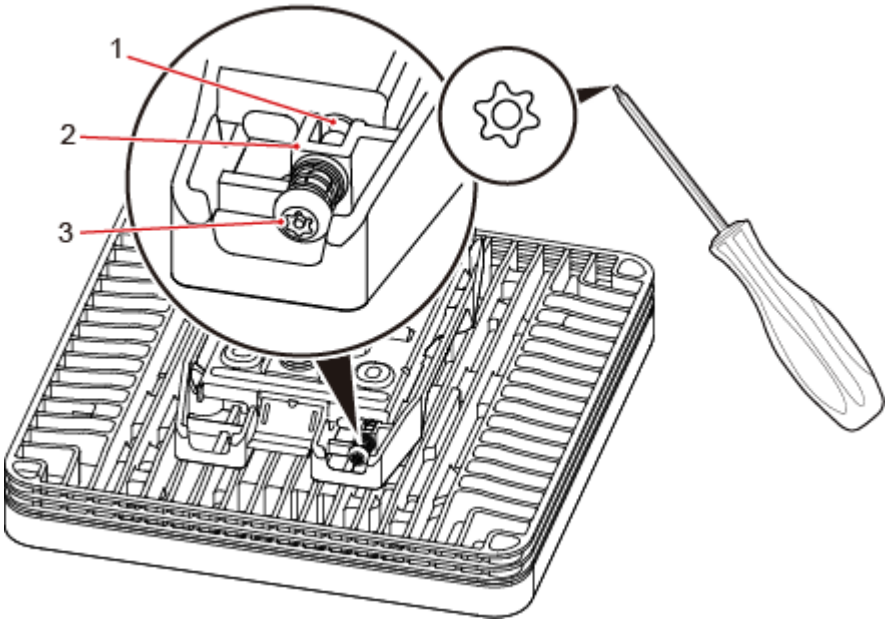

(1) M4 threaded hole (2) Hole for self-tapping screws (3) Quincunx screw

----End

8.3.6 Installing a pRRUon a Keel

This section describes how to install a pRRU3901 on a keel. If a suspended ceiling plate cannot bear the pRRU, the pRRU can be installed on the keel on the ceiling. The standard keel with a width less than 45 mm, instead of the non-standard keel, is recommended.

Context

Before installing the pRRU on a keel, ensure that the keel is strong enough to bear the pRRU.

- The mounting bracket of the pRRU can be installed on the keel of the following specifications: GBT 11981-2008, JIS A6517-2002, and ASTM C635 C635M-2007. The installation mode depends on onsite requirements because there are various keels.
- This section describes the procedure of installing a pRRU on the keel of JIS standard used in Japan. The procedure of installing a pRRU on other keels is the same as that of installing a pRRU on the keel of JIS standard.

The keel used on the ceiling is thin. During installation, fix the mounting kits onto the large surface instead of the small surface of the keel to prevent distorting the keel.

Procedure

Step 1 Determine the position for installing the pRRU based on the construction blueprint and the clearance requirements.

NOTE
For details about the clearance requirements, see 8.1.3 Space Requirements.

Copyright © Huawei Technologies Co., Ltd.

Step 2 Place the U-shaped metal plate across the keel. Use a marker to mark the projective positions of the mounting holes on the suspended ceiling plate, as shown in Figure 8-28.

Figure 8-28 Anchor points on the suspended ceiling plate

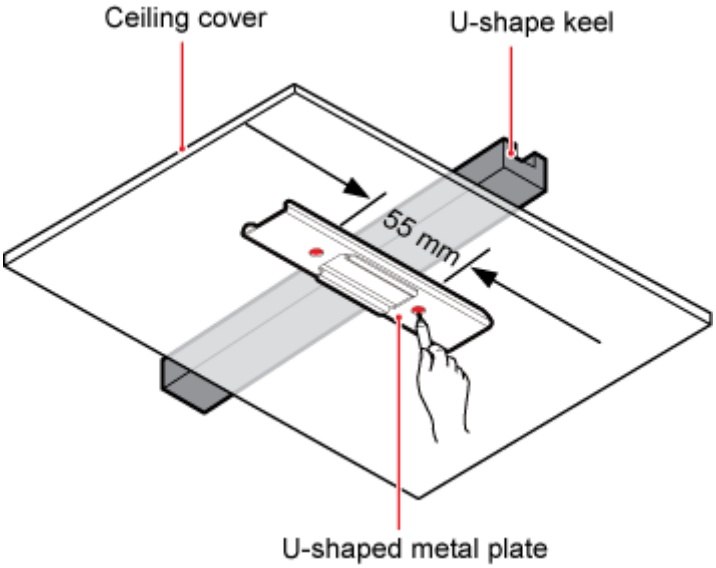

NOTE

To prevent inhalation or eye contact with dust, take adequate preventive measures when drilling holes.

Step 3 Use a hammer drill to drill holes at the anchor points. You are advised to use the hammer drill with Φ12 bore.

Step 4 Lead two bolts (M4) through the mounting bracket and the ceiling plate. Use a torque screwdriver to torque the bolts to 1.4 N•m, as shown in Figure 8-29.

Copyright © Huawei Technologies Co., Ltd.

Figure 8-29 Installing the mounting bracket

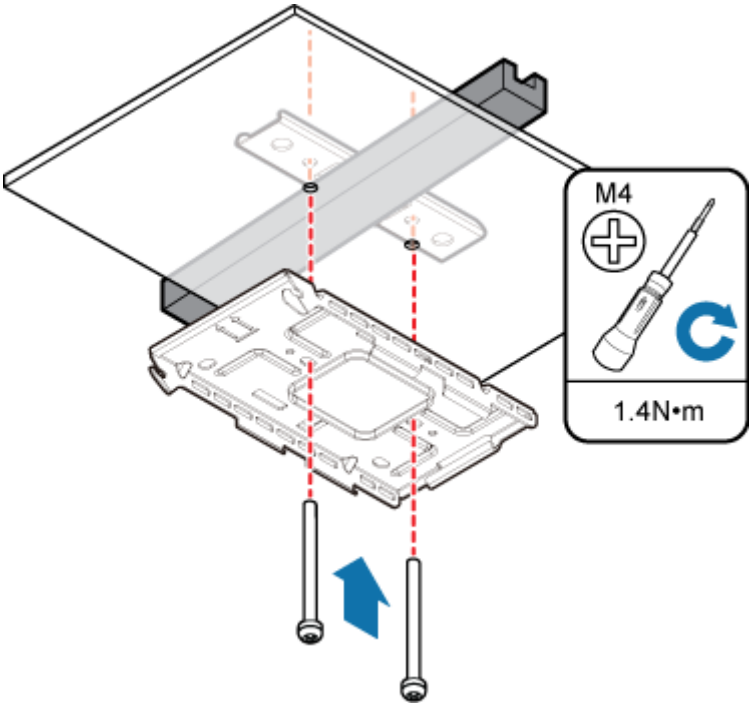

NOTE

- The bolt used for installing the pRRU on a suspended ceiling plate depends on the plate thickness:
- The delivered bolt (M4 x 35) is used if the plate thickness is less than 25 mm.
- The delivered bolt (M4 x 60) is used if the plate thickness ranges from 25 mm to 45 mm.
- If the screws cannot be tightened using a Phillips screwdriver, use a hex key or an electric screwdriver to assist the installation.

Step 5 Fit the rotation axis on the pRRU into the hooks on the mounting bracket, and then push the pRRU against the mounting bracket until a click is heard. See Figure 8-30.

Copyright © Huawei Technologies Co., Ltd.

Figure 8-30 Installing a pRRU on a keel

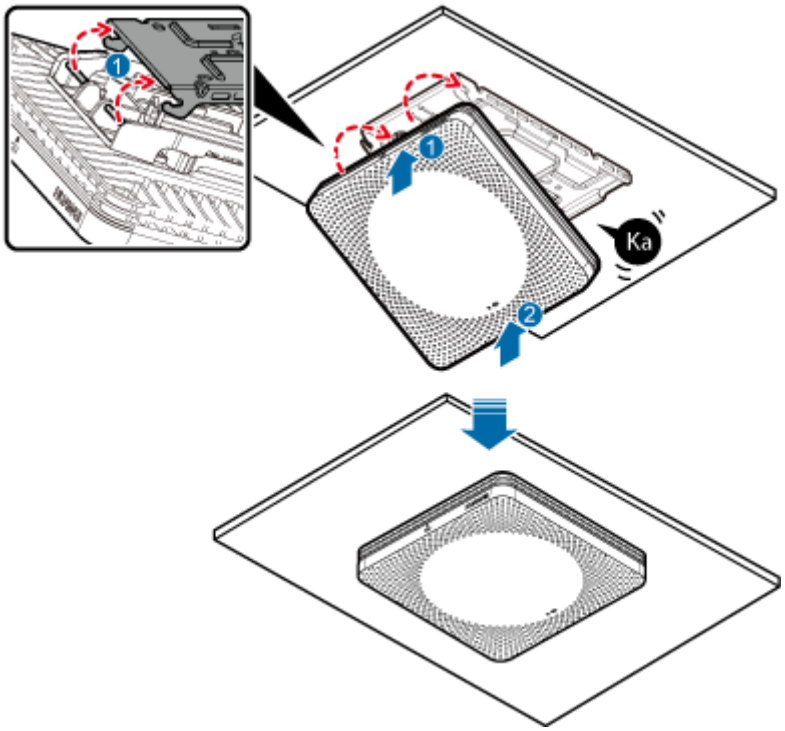

NOTE

- Before installing the pRRU, connect one end of the Ethernet cable to the CPRI_E0 port on pRRU.
- It is good practice to perform the installation from the side view to promptly align the hooks with the rotation axis.

Step 6 **Optional:** Use T20 with hole screwdriver to lock the protection screw on the attachment plate. See Figure 8-31.

The protection screw protects the pRRU from being removed and must be locked if required.

Copyright © Huawei Technologies Co., Ltd.

Figure 8-31 Locking the protection screw

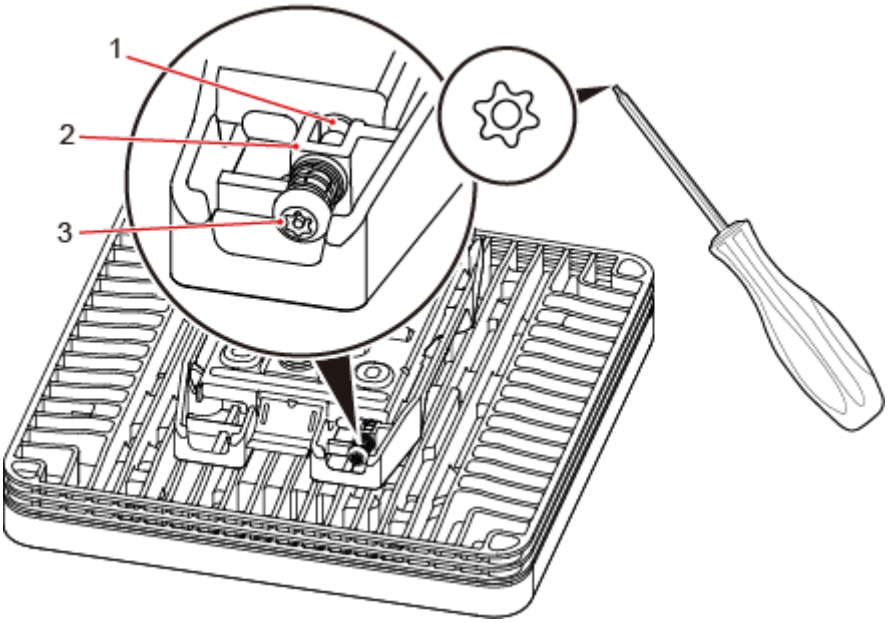

(1) M4 threaded hole (2) Hole for self-tapping screws (3) Quincunx screw

----End

8.3.7 Installing a pRRU on Steel Hangers

This section describes how to install a pRRU on steel hangers.

Context

Either M6 or M8 steel hangers can be used for installation.

Procedure

Step 1 Determine the position for installing the pRRU based on the construction blueprint and the clearance requirements.

NOTE
For details about the clearance requirements, see 8.1.3 Space Requirements.

Step 2 Install two steel hangers onto the ceiling. A distance of 90 mm must be retained between the two hangers, as shown in Figure 8-32.

Copyright © Huawei Technologies Co., Ltd.

Figure 8-32 Installing steel hangers

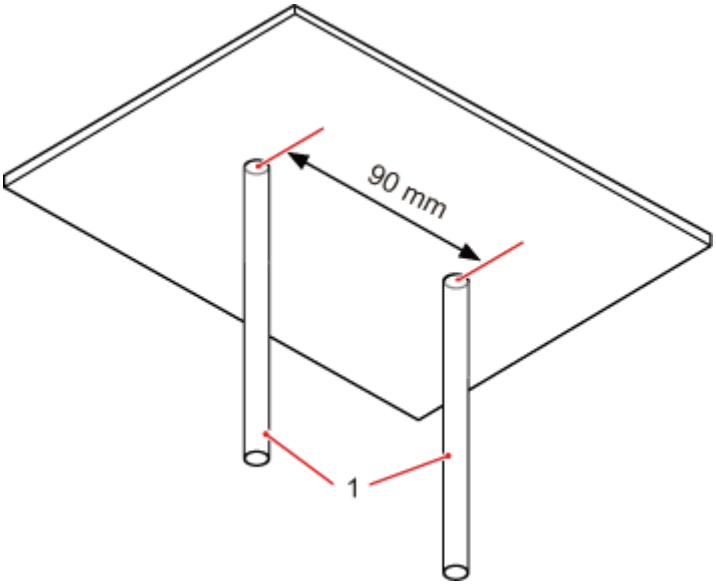

Step 3 Install the nuts, spring washers, flat washers, and a U-shaped metal plate onto the steel hangers, and use a torque wrench to torque the U-shaped metal plate to 5 N•m (on M6 steel hangers) or 12 N•m (on M8 steel hangers). See Figure 8-33.

NOTE

- The edge side of the U-shaped metal plate must face upwards.
- The nuts on the underside of the U-shaped metal plate must be completely fixed into the steel hangers, and the lower surface of a nut cannot be exposed on the end side of steel hangers, as shown in Figure 8-33.

Figure 8-33 Installing the U-shaped metal plate onto the steel hangers

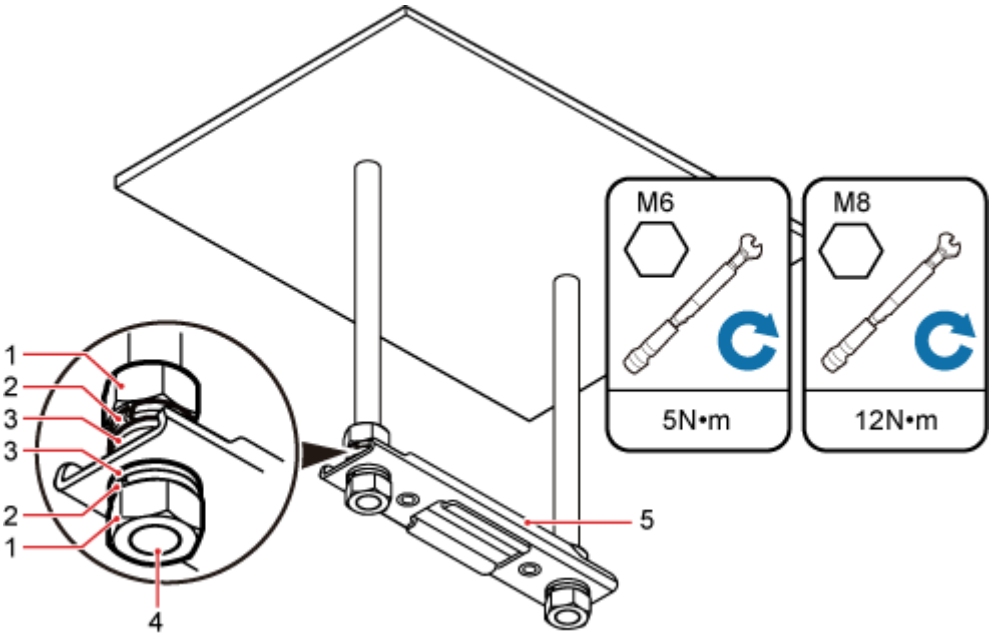

(1) Nuts (2) Spring washers (3) Flat washers

Copyright © Huawei Technologies Co., Ltd.

(4) Steel hangers	(5) U-shaped metal plate	–

Step 4 Lead two bolts (M4x35) through the mounting bracket and the ceiling plate. Use a torque screwdriver to torque the bolts to 1.4 N•m, as shown in Figure 8-34.

Figure 8-34 Installing the mounting bracket

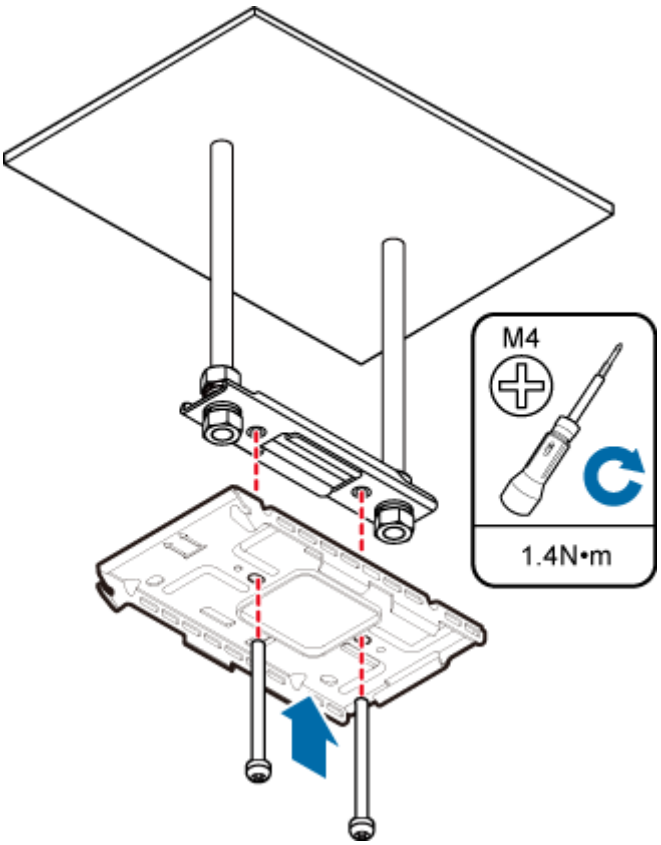

NOTE

If the screws cannot be tightened using a Phillips screwdriver, use a hex key or an electric screwdriver to assist the installation.

Step 5 Fit the rotation axis on the pRRU into the hooks on the mounting bracket, and then push the pRRU against the mounting bracket until a click is heard. See Figure 8-35.

Copyright © Huawei Technologies Co., Ltd.

Figure 8-35 Installing a pRRU on a keel

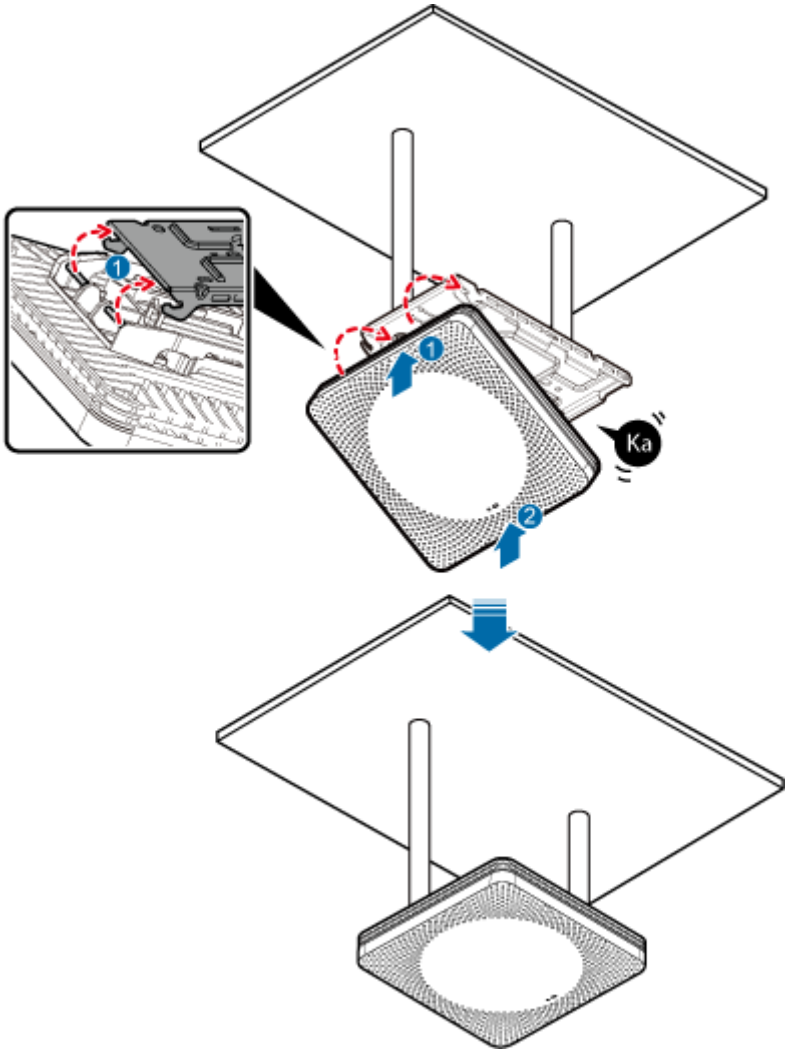

NOTE

- Before installing the pRRU, connect one end of the Ethernet cable to the CPRI_E0 port on pRRU.
- It is good practice to perform the installation from the side view to promptly align the hooks with the rotation axis.

Step 6 **Optional:** Use T20 with hole screwdriver to lock the protection screw on the attachment plate. See Figure 8-36.

The protection screw protects the pRRU from being removed and must be locked if required.

Copyright © Huawei Technologies Co., Ltd.

Figure 8-36 Locking the protection screw

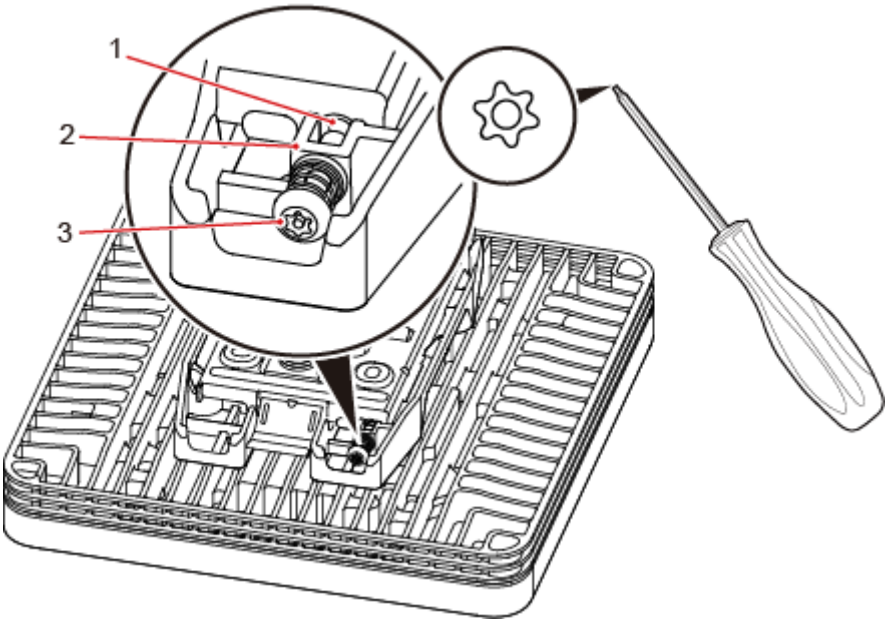

(1) M4 threaded hole (2) Hole for self-tapping screws (3) Quincunx screw

----End

8.3.8 Installing the Cabinet

In the outdoor scenario, the pRRU3902 should be installed in the cabinet firstly.

Context

An RF surge protector provides surge protection for the RF ports on pRRU3902, and a PoE surge protector provides surge protection for the CPRI ports.

One pRRU3902 with internal antenna need to be configured with one PoE surge protector.

One pRRU3902 with external antenna need to be configured with one PoE surge protector and four RF surge protectors at the same time.

Procedure

Step 1 Install the plate onto the cabinet, as shown in Figure 8-37.

Copyright © Huawei Technologies Co., Ltd.

Figure 8-37 Installing the plate onto the cabinet

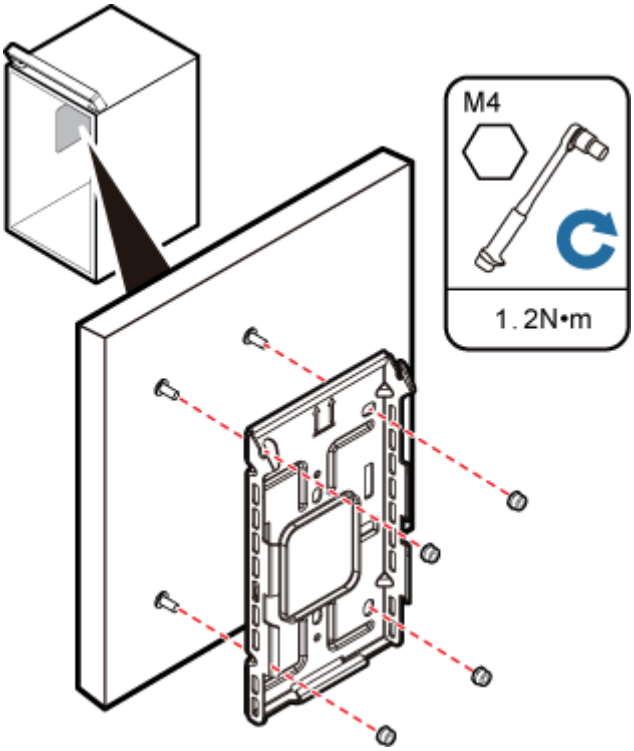

NOTE

Make sure all the cables are installed before installing the plate. For details about installing the cables of pRRU3902, see Figure 8-38.

Copyright © Huawei Technologies Co., Ltd.

Figure 8-38 Installing the pRRU3902 cables

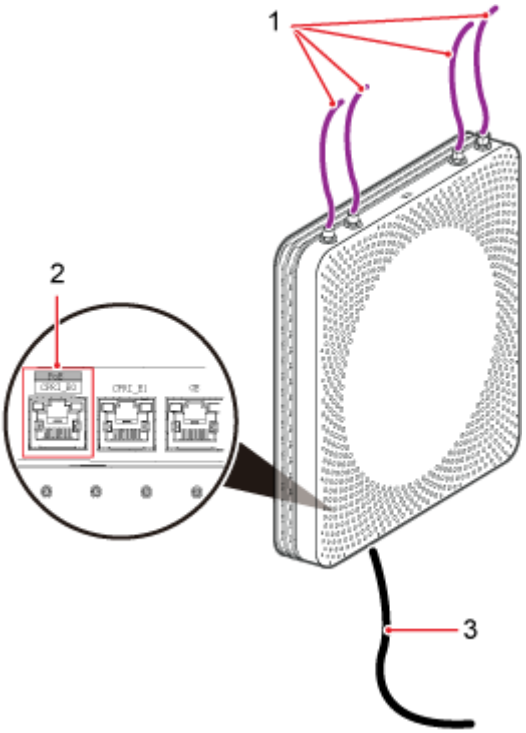

(1) RF Jumper	(2) CPRI_E0 port	(3) Ethernet Cable

Step 2 Fit the rotation axis on pRRU3902 into the hooks on the mounting bracket, and then push pRRU3902 against the mounting bracket until a click is heard, as shown in Figure 8-39.

Copyright © Huawei Technologies Co., Ltd.

Figure 8-39 Installing a pRRU3902 into the cabinet

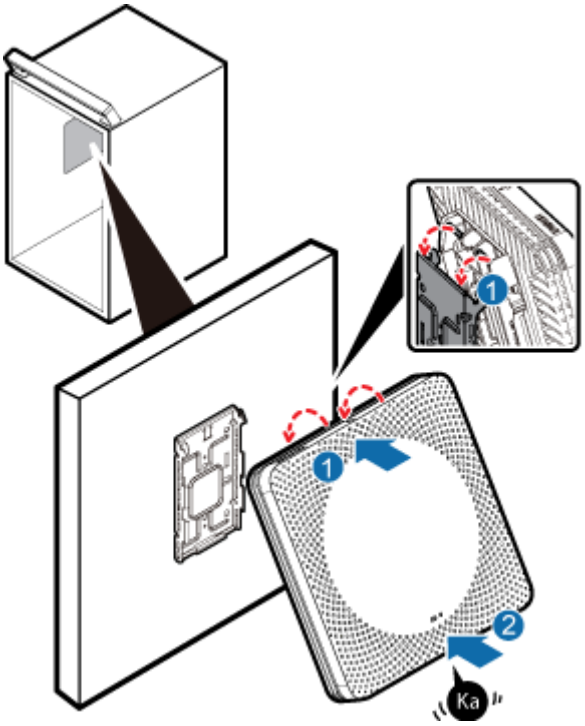

Step 3 **Optional:** Use T20 with hole screwdriver to lock the protection screw on the attachment plate. See Figure 8-40.

The protection screw protects the pRRU3902 from being removed and must be locked if required.

Figure 8-40 Locking the protection screw

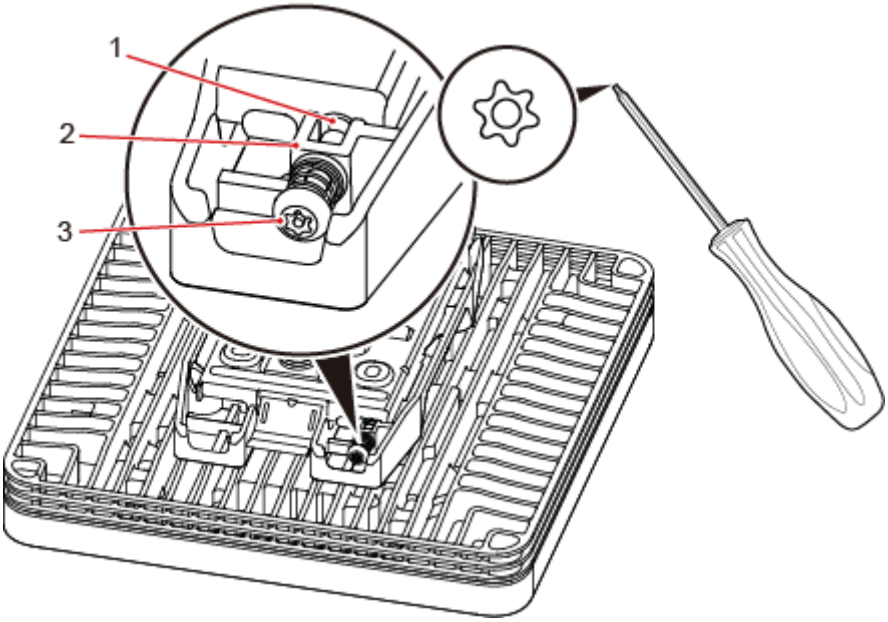

(1) M4 threaded hole (2) Hole for self-tapping screws (3) Quincunx screw

Copyright © Huawei Technologies Co., Ltd.

----End

8.4 Installing pRRU Cables

This section describes the procedure of installing the pRRU cables.

8.4.1 Requirements for Cable Layout

Cables must be routed according to the specified cabling requirements to prevent signal interference.

NOTE

If certain cables listed below are not required, skip the requirements for routing these cables.

General Requirements for Cable Layout

National Standards

- Code for Engineering Design of Generic Cabling System for Building and Campus (GB 50311-2007)
- Code for Engineering Acceptance of Generic Cabling System for Building and Campus (GB50312-2007).
- Security Protection Engineering Technology Specifications (GB 50348-2004)
- Code for Construction and Acceptance of the Electronic Information System Room (GB 50462-2008)
- Code for Quality Acceptance of the Intelligent Building Engineering (GB 50339-2003)
- Code for Quality Acceptance of Electric Engineering Construction in Building (GB 50303-2002)
- Technical Specification for Construction and Acceptance of Telecommunication Conduit Engineering (GB 50374-2006)

International Standards

- Generic Cabling for Customer Premises (ISO/IEC 11801)
- Commercial Building Telecommunications Cabling Standard (EIA/TIA 568)
- Commercial Building Standard for Telecommunication Pathways and Spaces (EIA/TIA 569)
- Administration Standard for Commercial Telecommunications Infrastructure (EIA/TIA 606)
- Grounding and Bonding Requirements for Telecommunications in Commercial Buildings (EIA/TIA 607)
- Generic Cabling Systems for Information Technology (EN 50173)
- Cabling Installation for Information Technology (EN 50174)

Bending radius

- The bending radius of a 1/4" jumper, a 1/2" softer jumper, and a 1/2" common jumper must be longer than 35 mm, 50 mm, and 127 mm, respectively.
- The bending radius of a power cable is at least five times the diameter of the cable.

Copyright © Huawei Technologies Co., Ltd.

- The bending radius of a signal cable must be at least five times the diameter of the cable.

Cable binding

- Cables of the same type are bound together.
- Different types of cables must be separately routed with a minimum spacing of 30 mm and cannot be entangled.
- The cables are bound tightly and neatly and the sheaths of the cables is intact.
- The cable ties face the same direction and all cable ties bound at similar positions must be in a straight line.
- The extra length of each indoor cable tie must be cut off. A slack of 5 mm is reserved for each outdoor cable tie before the extra length is cut off. All cut surfaces are without sharp edges.
- Labels or nameplates are attached to both ends, joints, or turns of cables after they are installed.

Safety

- The steel pipe or fire-resistant rigid polyvinyl chloride pipe should be used for the cable duct or for routing cables. The cross-sectional usage of the cable duct should be 30% to 50% and that of the pipe for routing cables should be 25% to 30%.
- Cables are placed away from sharp objects or wall burrs. If these positions are inevitable, protection pipes are required for the cables.
- Cables are routed away from heat sources, or heat-insulation materials are added between cables and heat sources.
- A clearance is reserved at turns of a cable or the position close to a device, facilitating cable and device maintenance. The recommended clearance is about 0.1 m.

Requirements for Special Cables

Ethernet Cable

- A maximum of 100 Ethernet cables can be bundled if no PVC pipes are used. If pipes are used, a maximum of 24 Ethernet cables can be led through a pipe. In this case, ensure that 1/3 space inside the pipes must be vacant.
- The point at which an Ethernet cable is bundled must be spaced 400 mm or less from the Ethernet port on a pRRU.
- For the pRRU used in the elevator engine room on the rooftop, generator set for the subway engine, and equipment room with central air conditioning, Ethernet cables must be led through metallic conduits that are reliably grounded at both ends.

8.4.2 Cable List

This section describes pRRUcable connections.

pRRU3902 Cables

Table 8-9 List of pRRU3901 cables

Cable	One End	The Other End

Copyright © Huawei Technologies Co., Ltd.

	Connector	Connected to ...	Connector	Connected to ...
Ethernet Cable	RJ45 connector	CPRI_E0~CPRI_E7 port on RHUB	RJ45 connector	CPRI_E0~CPRI_E1 port on pRRU
	RJ45 connector	Transmission port on Access Control(AC)	RJ45 connector	• GE port on pRRU3901 • CPRI_E1 port on pRRU3911/pRRU3911+WIFI
(Optional) RF Jumper	SMA straight male connector/Type N male connector	External antenna TX/RX RF port on pRRU	Based on the port model of the antenna system.	Antenna system

8.4.3 Cable Connections

This section describes the cable connections for a single pRRU.

pRRU3902 (Indoor)

Figure 8-41 shows the cable connection of pRRU3902 with internal antenna.

Figure 8-41 pRRU3902 cable connection (1)

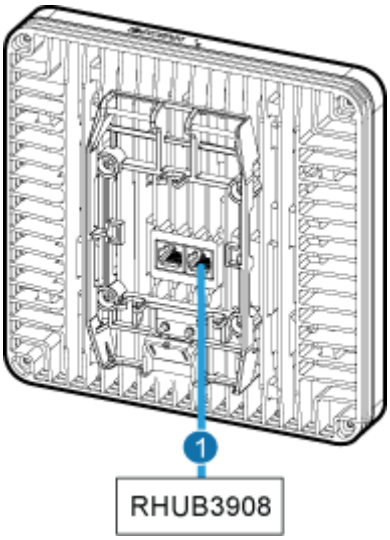

(1) Ethernet cable –

Copyright © Huawei Technologies Co., Ltd.

NOTE

The Extender can be used to lengthen the distance between the RHUB and the pRRU3902 connected using the Ethernet cable. If the Extender is used, the Ethernet cable is divided into two parts, one between the RHUB and the Extender and the other between the Extender and the pRRU3902.

Figure 8-42 shows the cable connection when the pRRU3902 supporting external antennas.

Figure 8-42 pRRU3902 cable connection (2)

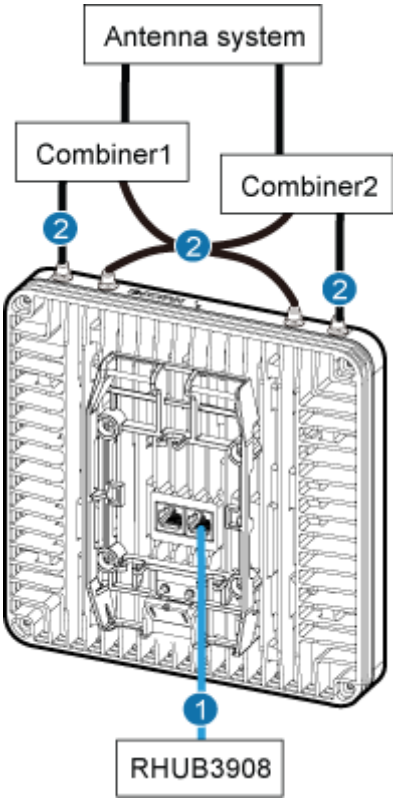

(1) Ethernet cable (2) RF jumper

NOTE

The Extender can be used to lengthen the distance between the RHUB and the pRRU3902 connected using the Ethernet cable. If the Extender is used, the Ethernet cable is divided into two parts, one between the RHUB and the Extender and the other between the Extender and the pRRU3902.

pRRU3902 (Outdoor)

Figure 8-43 shows the cable connection of pRRU3902 intalled outside.

Copyright © Huawei Technologies Co., Ltd.

Figure 8-43 pRRU3902 cable connection

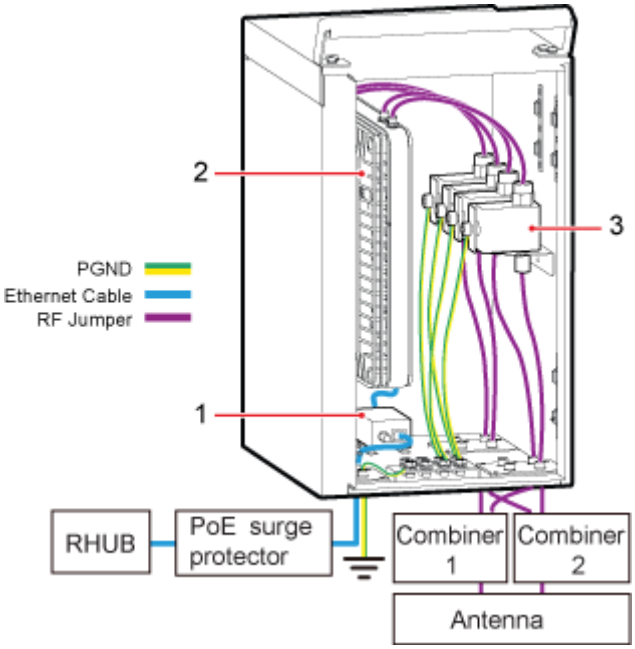

(1) PoE surge protector 1 (2) pRRU3902 (3) RF surge protector

NOTE

- The Extender can be used to lengthen the distance between the RHUB and the pRRU3902 connected using the Ethernet cable. If the Extender is used, the Ethernet cable is divided into two parts, one among the RHUB, PoE surge protector 2, PoE surge protector 3, Extender and the other among Extender, PoE surge protector 4, PoE surge protector 1, pRRU3902.
- For details about installation of the PoE surge protector and cables, see 12 (Optional) Installing the PoE Surge Protector and Cables.
- For details about installation of the RF surge protector and cables, see 13 (Optional) Installing the RF Surge Protector and Cables.

pRRU3911+WIFI

Figure 8-44 shows the cable connections of pRRU3911+WIFI.

Copyright © Huawei Technologies Co., Ltd.

Figure 8-44 pRRU cable connection (1)

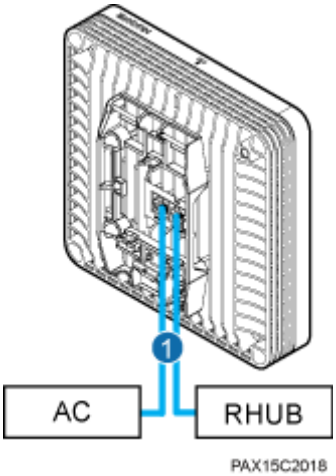

(1) Ethernet cable

NOTE

The Extender can be used to lengthen the distance between the RHUB and the pRRU connected using the Ethernet cable. If the Extender is used, the Ethernet cable is divided into two parts, one between the RHUB and the Extender and the other between the Extender and the pRRU3911.

Figure 8-45 shows the cable connections of pRRU with external antenna.

Figure 8-45 pRRU3911+WIFI cable connection (2)

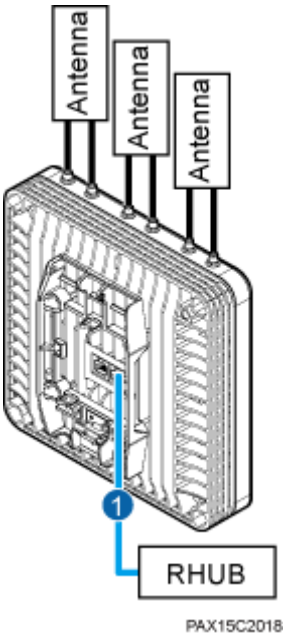

(1) Ethernet cable

NOTE

The Extender can be used to lengthen the distance between the RHUB and the pRRU connected using the Ethernet cable. If the Extender is used, the Ethernet cable is divided into two parts, one between the RHUB and the Extender and the other between the Extender and the pRRU.

Copyright © Huawei Technologies Co., Ltd.

8.4.4 Cable Installation Process

This section describes the process of installing pRRU cables.

Figure 8-46 shows the process of installing pRRU cables.

Figure 8-46 cable installation process

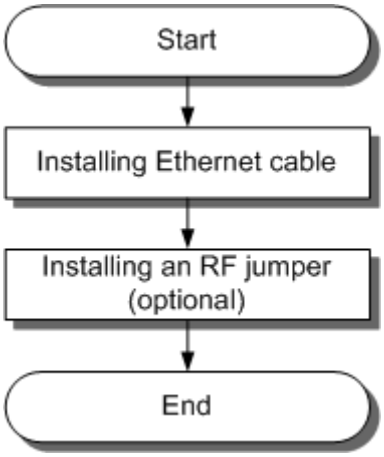

NOTE
Only the pRRU3902 using external antennas requires RF jumpers, and the pRRU3911/pRRU3911+WIFI requires no RF jumpers.

8.4.5 Installing a pRRU3902 Ethernet Cable

This section describes how to install an Ethernet cable.

Prerequisites

- The Ethernet cable must be of Category 5e (enhanced) or higher. In addition, its cross-sectional area must be 24 AWG or larger and frame spread rating must be CM or higher.
- The Ethernet cables can be straight-through cables.
- With the internal PoE module providing power, the maximum length of an Ethernet cable is 100 m. With the Extender, the distance of the pRRU3901 and RHUB can be extended by the Extender up to a total distance of 200 m.
- Ethernet cables are not delivered, and they must be prepared onsite. You need to use a network cable tester to test the Ethernet cable connection.

Context

The Ethernet cable has the following functions:

- Provides power supply for the pRRU3902 when the cable connects the CPRI_E0 port on the pRRU3902 to the RHUB.
- Transmits CPRI signals between an RHUB and a pRRU3902.

Copyright © Huawei Technologies Co., Ltd.

For details about the cable connections in the different scenarios, see 8.4.3 Cable Connections. The Ethernet cable connections between RHUB and pRRUs are the same. The following section describes the connections between RHUB-Extender-pRRU3902 as an example.

In the outdoor scenario, PoE surge protector is needed to provide surge protection for the Ethernet ports. For details about the installation of PoE surge protector, see 12 (Optional) Installing the PoE Surge Protector and Cables.

Procedure

Step 1 Make the Ethernet cables.

1. Assemble an RJ45 connector and an Ethernet cable by following instructions in Assembling the Unshielded RJ45 Connector and the Ethernet Cable, Assembling the Shielded RJ45 Connector and the Ethernet Cable.

NOTE

- Follow pin assignment instructions described in section Ethernet Cable in *DBS3900 LampSite Hardware Description* to assemble the RJ45 connector and the Ethernet cable. Otherwise, the transmission signal quality deteriorates and CPRI links may be disconnected.
- The pRRU3902 supports both unshielded and shielded Ethernet cables. It is good practice to use unshielded Ethernet cables.

2. Check whether the made RJ45 connector is qualified by following instructions in Checking the Appearance of Metal Contact Strips.
3. To complete the assembly of the other end, repeat Step 1.1 and Step 1.2.
4. Check whether the touch points on the connectors at both ends are normally conducted and well contacted and whether the connections are correct by following instructions in Testing the Connection of Assembled Cables of *Installation Reference*.

Step 2 Install an Ethernet cable between an RHUB and a pRRU3902.

Step 3 Connect the RJ45 connector at one end of the Ethernet cable to the CPRI_E0 port on the pRRU3902 panel.

Step 4 **Optional:** Connect the RJ45 connector at the other end of the Ethernet cable to the output port of the Extender. Then, connect the RJ45 connector at one end of another Ethernet cable to the input port of the Extender.

In this scene, the Ethernet cable is divided into two parts, one between the RHUB and the Extender and the other between the Extender and the pRRU3902.

Step 5 Connect the RJ45 connector at the other end of the Ethernet cable to any port ranging from CPRI_E0 to CPRI_E7 on the RHUB panel based on the engineering design, as shown in Figure 8-47.

Copyright © Huawei Technologies Co., Ltd.

Figure 8-47 Installing an Ethernet cable

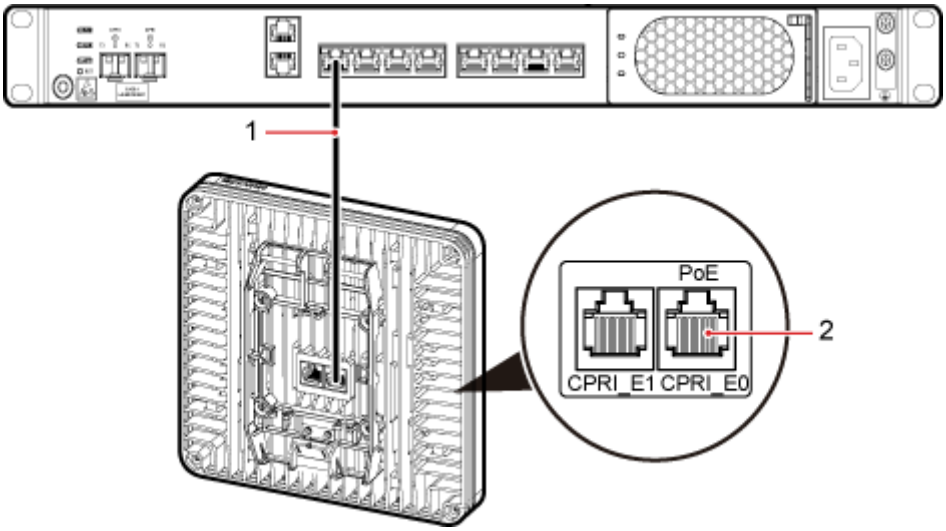

(1) Ethernet cable (2) CPRI_E0 port on the pRRU3902

Step 6 **Optional:** If the pRRU3902 is installed in a place with water dripping risks, seal its Ethernet ports with mastic cement.

1. Take about 40 g mastic cement, as shown in Figure 8-48.

Figure 8-48 Mastic cement cube

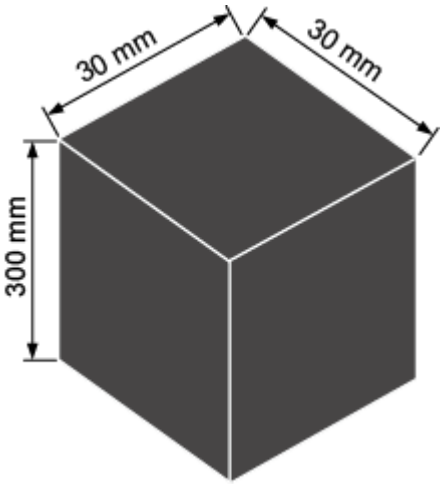

2. Flatten the mastic cement into a 20 cm strip, as shown in Figure 8-49.

Figure 8-49 Flattening the mastic cement into a strip

Copyright © Huawei Technologies Co., Ltd.

3. Shape the mastic cement strip around the Ethernet ports from outside the connector clips. Ensure the external sides of the connectors are fully sealed, as shown in Figure 8-50.

Figure 8-50 Sealing the connector external side

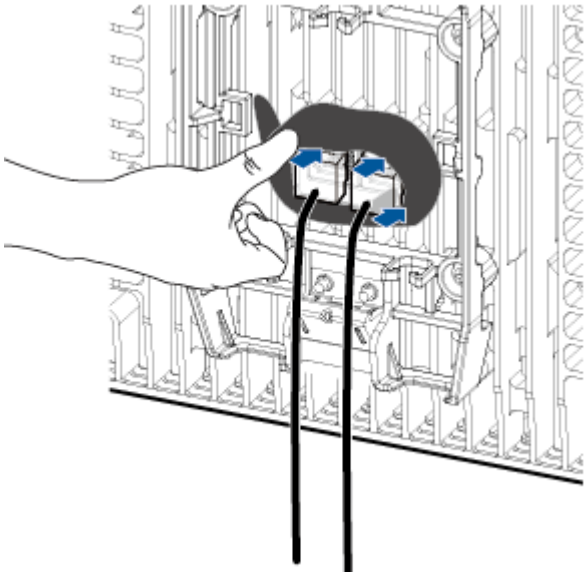

NOTE

Compress the mastic cement downwards along the connector external side. Do not press the mastic cement towards the connector. This operation may damage the connector clip and make it unable to hold the connector, causing cable disconnection, as shown in Figure 8-51.

Figure 8-51 Correct and incorrect ways for sealing the connector

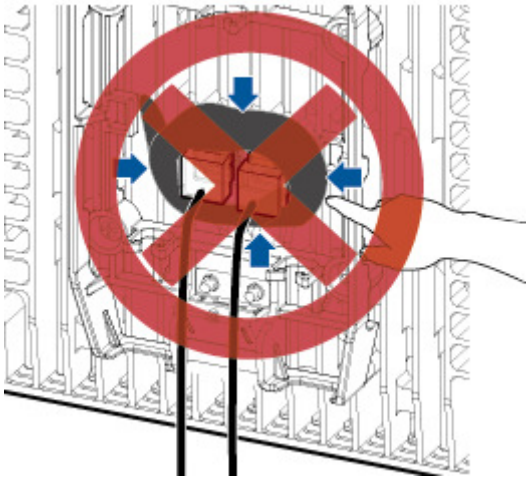

4. Shape the mastic cement around the cables in a repeating 8 manner, as shown in Figure 8-52.

Copyright © Huawei Technologies Co., Ltd.

Figure 8-52 Shaping the mastic cement between cables

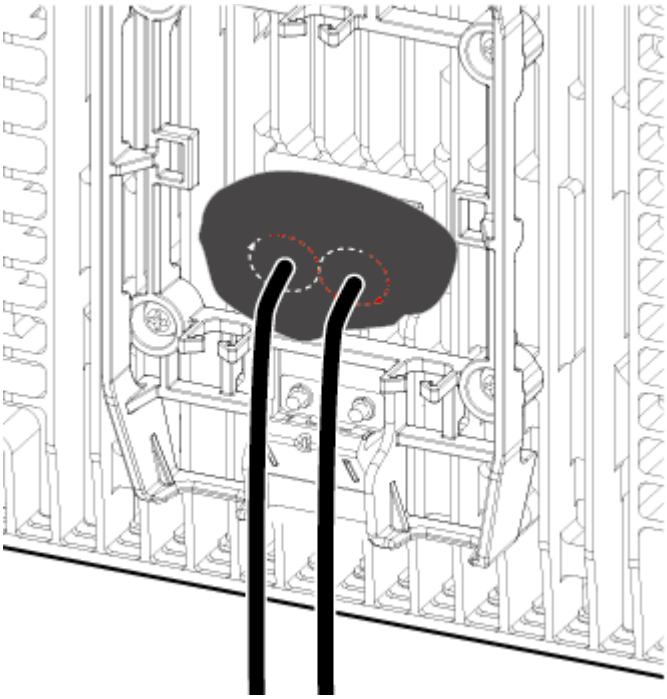

5. Compress and flatten the mastic cement until the Ethernet ports are fully covered and sealed. Nip the mastic cement from the connector side upwards along the cables until 10 mm high, as shown in Figure 8-53. This ensures that the mastic cement envelop does not crack in case the cable is bent.

Figure 8-53 Fully sealed Ethernet ports

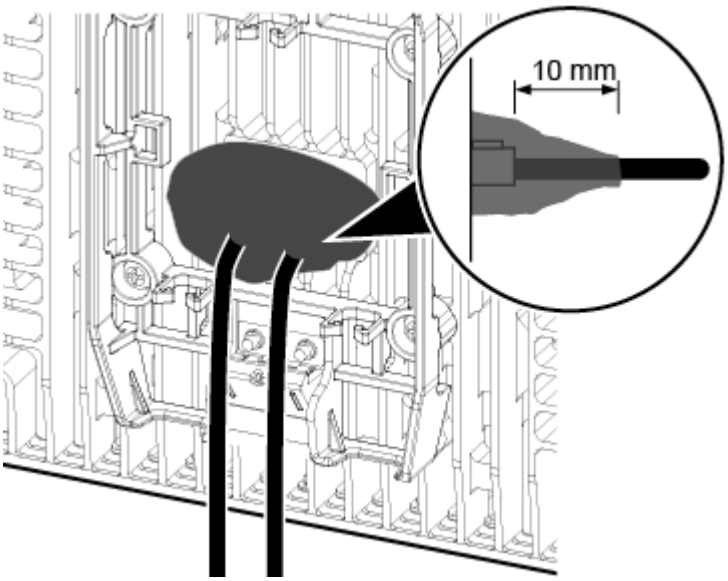

----End

Copyright © Huawei Technologies Co., Ltd.

Follow-up Procedure

1. Route the cable, and then use a cable tie to bind the cable. For details, see 8.4.1 Requirements for Cable Layout.
2. Label the installed cable. For details, see section 15.4 Attaching an L-Shaped Label.

8.4.6 Installing a pRRU3911/pRRU3911+WIFI Ethernet Cable

This section describes how to install a pRRU3911/pRRU3911+WIFI Ethernet cable.

Prerequisites

- The Ethernet cable must be of Category 5e (enhanced) or higher. In addition, its cross-sectional area must be 24 AWG or larger and frame spread rating must be CM or higher.
- The Ethernet cables can be straight-through cables.
- With the internal PoE module providing power, the maximum length of an Ethernet cable is 100 m. With the Extender, the distance of the pRRU3911/pRRU3911+WIFI and RHUB can be extended by the Extender up to a total distance of 200 m.
- Ethernet cables are not delivered, and they must be prepared onsite. You need to use a network cable tester to test the Ethernet cable connection.

Context

The Ethernet cable has the following functions:

- Provides power supply for the pRRU3911/pRRU3911+WIFI when the cable connects the CPRI_E0 port on the /pRRU3911+WIFI to the RHUB.
- Transmits CPRI signals between an RHUB and a pRRU3911/pRRU3911+WIFI.

Procedure

Step 1 Make the Ethernet cables.

1. Assemble an RJ45 connector and an Ethernet cable by following instructions in Assembling the Unshielded RJ45 Connector and the Ethernet Cable, Assembling the Shielded RJ45 Connector and the Ethernet Cable.

NOTE

Follow pin assignment instructions described in section Ethernet Cable in *DBS3900 LampSite Hardware Description* to assemble the RJ45 connector and the Ethernet cable. Otherwise, the transmission signal quality deteriorates and CPRI links may be disconnected.

2. Check whether the made RJ45 connector is qualified by following instructions in Checking the Appearance of Metal Contact Strips.
3. To complete the assembly of the other end, repeat Step 1.1 and Step 1.2.
4. Check whether the touch points on the connectors at both ends are normally conducted and well contacted and whether the connections are correct by following instructions in Testing the Connection of Assembled Cables of *Installation Reference*.

Step 2 Install an Ethernet cable between an RHUB and a pRRU3911/pRRU3911+WIFI.

Step 3 Connect the RJ45 connector at one end of the Ethernet cable to the CPRI_E0 port on the pRRU3911/pRRU3911+WIFI panel.

Copyright © Huawei Technologies Co., Ltd.

Step 4 **Optional:** Connect the RJ45 connector at the other end of the Ethernet cable to the output port of the Extender. Then, connect the RJ45 connector at one end of another Ethernet cable to the input port of the Extender.

In this scene, the Ethernet cable is divided into two parts, one between the RHUB and the Extender and the other between the Extender and the pRRU3911/pRRU3911+WIFI.

Step 5 Connect the RJ45 connector at the other end of the Ethernet cable to any port ranging from CPRI_E0 to CPRI_E7 on the RHUB panel based on the engineering design, as shown in Figure 8-54.

Figure 8-54 Installing an Ethernet cable

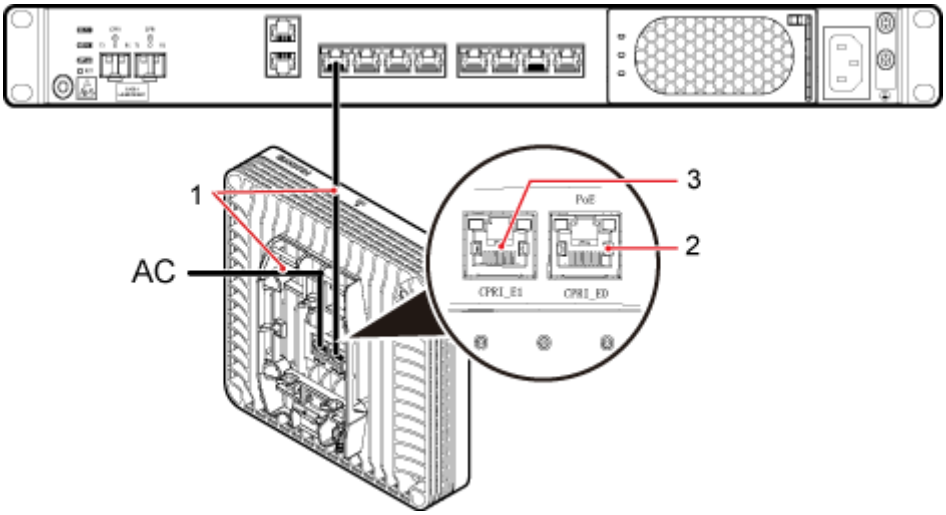

(1) Ethernet cable (2) CPRI_E0 port (3) CPRI_E1 port

Step 6 **Optional:** If the Wi-Fi daughter board is used, install the Ethernet cable to connect the AC and the pRRU3911/pRRU3911+WIFI.

1. Remove the dustproof cap from the CPRI_E1 port.
2. Connect an RJ45 connector of the Ethernet cable to the CPRI_E1 port on the pRRU3911/pRRU3911+WIFI.
3. Connect the other RJ45 connector of the Ethernet cable to the transmission port on the AC based on the engineering design requirements. See Figure 8-54.

Step 7 **Optional:** If the pRRU3902 is installed in a place with water dripping risks, seal its Ethernet ports with mastic cement.

1. Take about 40 g mastic cement, as shown in Figure 8-55.

Copyright © Huawei Technologies Co., Ltd.

Figure 8-55 Mastic cement cube

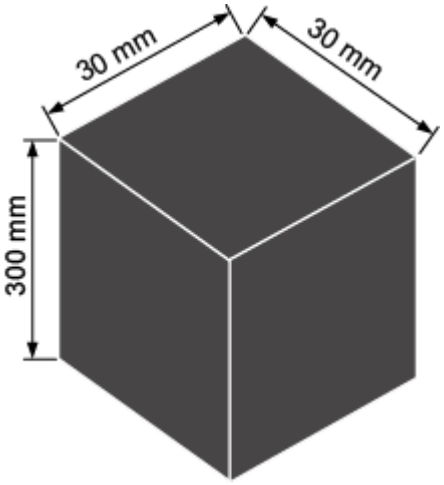

2. Flatten the mastic cement into a 20 cm strip, as shown in Figure 8-56.

Figure 8-56 Flattening the mastic cement into a strip

3. Shape the mastic cement strip around the Ethernet ports from outside the connector clips. Ensure the external sides of the connectors are fully sealed, as shown in Figure 8-57.

Figure 8-57 Sealing the connector external side

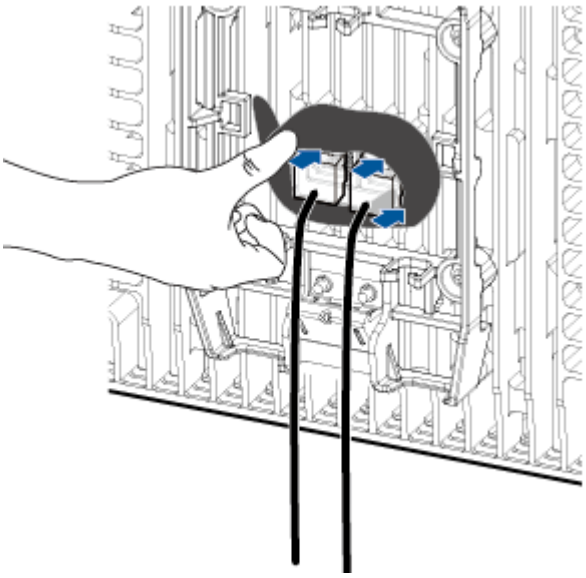

Copyright © Huawei Technologies Co., Ltd.

NOTE

Compress the mastic cement downwards along the connector external side. Do not press the mastic cement towards the connector. This operation may damage the connector clip and make it unable to hold the connector, causing cable disconnection, as shown in Figure 8-58.

Figure 8-58 Correct and incorrect ways for sealing the connector

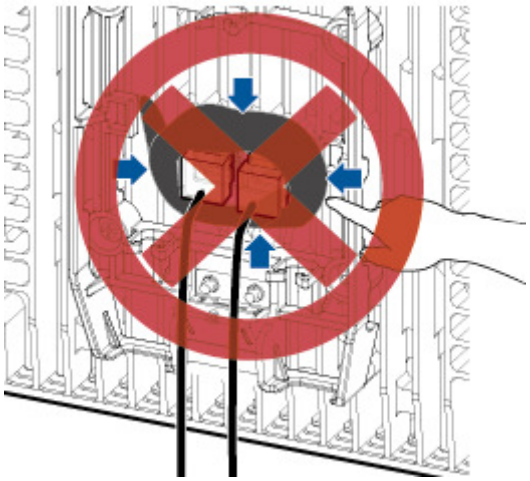

4. Shape the mastic cement around the cables in a repeating 8 manner, as shown in Figure 8-59.

Figure 8-59 Shaping the mastic cement between cables

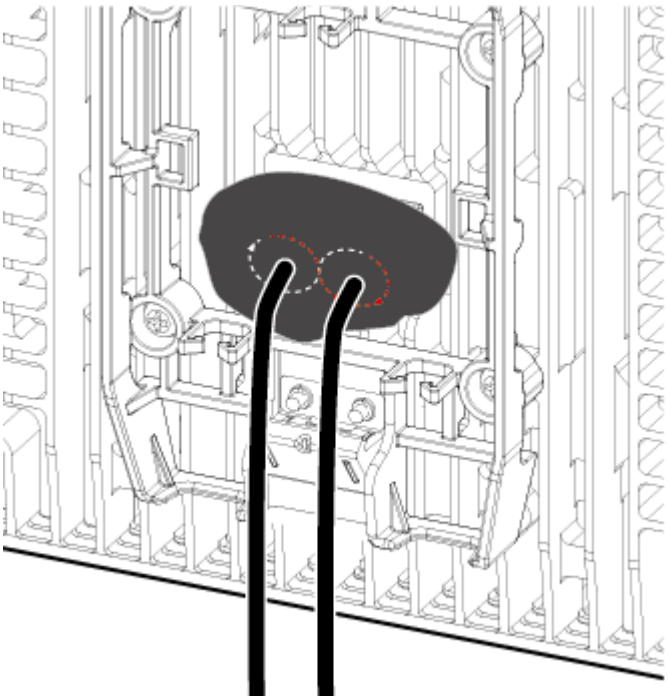

5. Compress and flatten the mastic cement until the Ethernet ports are fully covered and sealed. Nip the mastic cement from the connector side upwards along the cables until 10

Copyright © Huawei Technologies Co., Ltd.

mm high, as shown in Figure 8-60. This ensures that the mastic cement envelop does not crack in case the cable is bent.

Figure 8-60 Fully sealed Ethernet ports

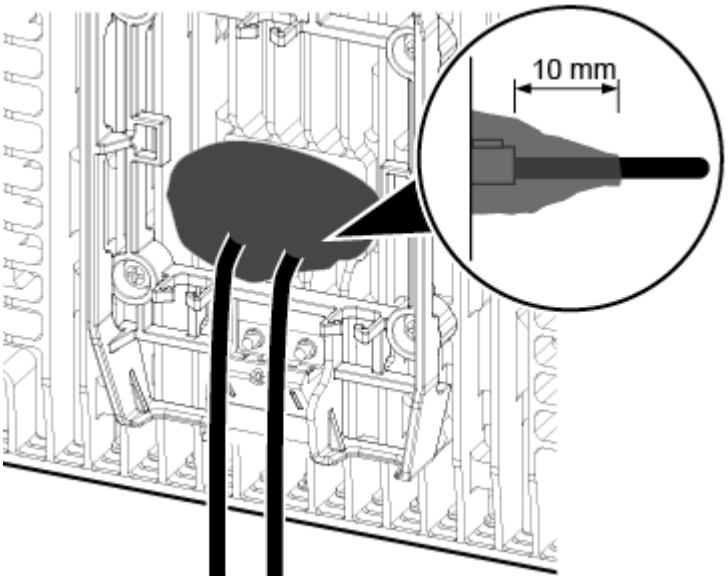

----End

8.4.7 Installing a pRRU3902 RF Jumper (Optional)

The RF Jumpers transmit radio frequency signals between pRRU3902 with external antennas and the combiners. Only the pRRU3902 using external antennas can be configured with an RF Jumper.

Context

- An RF jumpers delivered is 50 cm at most.
- If the RF jumper is provided by the customer, the jumper must not be lower than the RG316 specifications. In addition, the jumpers can be used after they are checked by Huawei engineers.
- pRRU3902s can be connected to external whip antennas or external remote antennas (through pRRU3902 RF jumpers). Whip antennas are delivered optionally. RF jumpers are not delivered.
- For details about the cable connections in the different scenarios, see 8.4.3 Cable Connections. The installation of RF jumper cables are the same. The following section describes the connections between antenna and pRRU3902 in the indoor scenario as an example.
- In the outdoor scenario, RF surge protector is needed to provide surge protection for the RF ports. For details about the installation of RF surge protector, see 13 (Optional) Installing the RF Surge Protector and Cables.

Copyright © Huawei Technologies Co., Ltd.

Procedure

Step 1 Use a torque wrench with a torque of 0.6 N•m to connect the SMA straight male connector on a jumper to the ANT port on the pRRU3902 panel.

NOTICE

Tighten it with hands, and then use a torque wrench to tighten it with a rotational speed of less than or equal to 2.4 rpm to tighten it.

Step 2 Connect the type N female connector of the jumper to the type N male connector of the RF feeder connected to the PORT port of the combiner, as shown as Table 8-10.

Table 8-10 Connections of the RF jumper between pRRU3902 and combiners

One End		The Other End	
Connector	**Connected to...**	**Connector**	**Connected to...**
SMA straight male connector	pRRU3902/ANT0 RF port	Type N male connector	Combiner1/PORT1 or PORT2 prot
	pRRU3902/ANT1 RF port		Combiner2/PORT1 or PORT2 prot
	pRRU3902/ANT2 RF port		Combiner1/PORT2 or PORT2 prot
	pRRU3902/ANT3 RF port		Combiner2/PORT2 or PORT1 prot

Copyright © Huawei Technologies Co., Ltd.

Figure 8-61 Installing jumpers between the pRRU3902 and Combiners

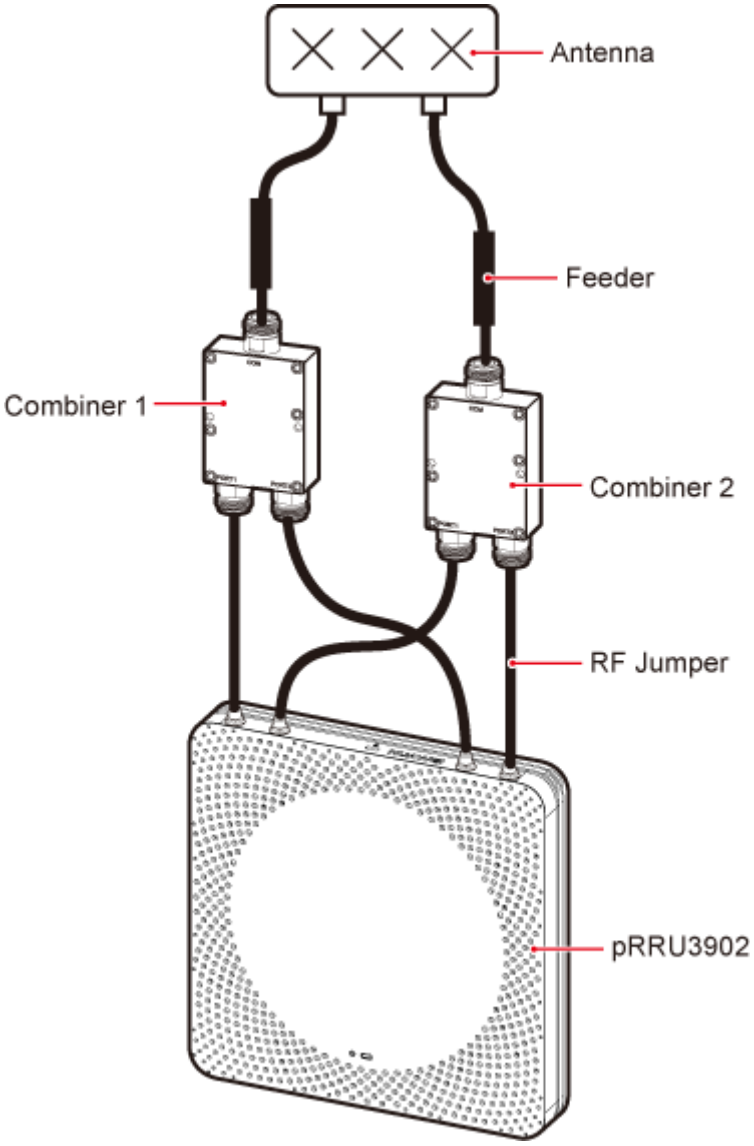

----End

Follow-up Procedure

1. Route the cable, and then use a cable tie to bind the cable. For details, see 7.5.1 Requirements for Cable Layout.
2. Label the installed cable. For details, see section 15.4 Attaching an L-Shaped Label.

8.4.8 Installing a pRRU3911 RF Jumper (Optional)

The RF Jumpers transmit radio frequency signals between pRRU3911 and the external antennas. Only the pRRU3911 using external antennas can be configured with an RF Jumper.

Copyright © Huawei Technologies Co., Ltd.

Context

- An RF jumpers delivered is 50 cm at most.
- If the RF jumper is provided by the customer, the jumper must not be lower than the RG316 specifications. In addition, the jumpers can be used after they are checked by Huawei engineers.
- pRRU3911s can be connected to external whip antennas or external remote antennas (through pRRU3911 RF jumpers). Whip antennas are delivered optionally. RF jumpers are not delivered.

Procedure

Step 1 Use a torque wrench with a torque of 0.6 N•m to connect the SMA straight male connector on a jumper to the ANT port on the pRRU3902 panel.

NOTICE

Tighten it with hands, and then use a torque wrench to tighten it with a rotational speed of less than or equal to 2.4 rpm to tighten it.

Step 2 Connect the type N female connector of the jumper to the type N male connector of the RF feeder connected to the built-in antenna.

NOTICE

Tighten the feeder close to the type N connector to ensure that the jumper is not tightened. In this way, the connectors on both ends of a jumper are not affected by the external force.

Figure 8-62 Installing jumpers between the pRRU3911 and external antennas

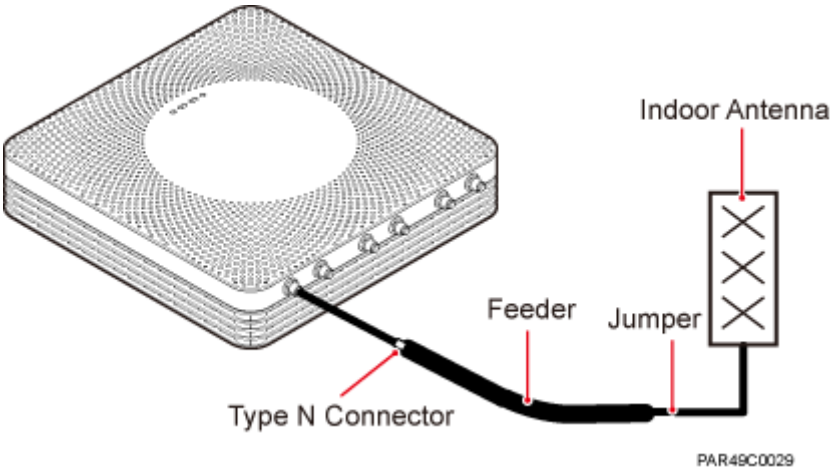

----End

Copyright © Huawei Technologies Co., Ltd.

Follow-up Procedure

1. Route the cable, and then use a cable tie to bind the cable. For details, see 7.5.1 Requirements for Cable Layout.
2. Label the installed cable. For details, see section 15.4 Attaching an L-Shaped Label.

8.5 (Optional) Installing a Combiner

This section describes how to install a combiner. The pRRU3902 using external antennas must be configured with a combiner.

Context

This section describes how to mount a combiner on a wall as an example. The actual installation mode depends on actual requirements.

Procedure

Step 1 Use a marker to mark two anchor points according to inter-hole spacing, as shown in Figure 8-63.

Figure 8-63 Marking anchor points

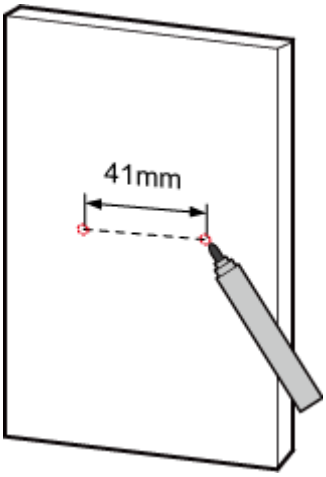

Step 2 Use a hammer drill with φ6 bore to drill holes at the marked anchor points, as shown in Figure 8-64. Use a vacuum cleaner to clean the dust inside and around the holes and measure the distance between them. If they are inaccurately positioned, re-measure and re-drill the holes. Then, use a rubber mallet to hit a plastic expansion sleeve into each hole.

Copyright © Huawei Technologies Co., Ltd.

Figure 8-64 Drilling holes and installing expansion bolts

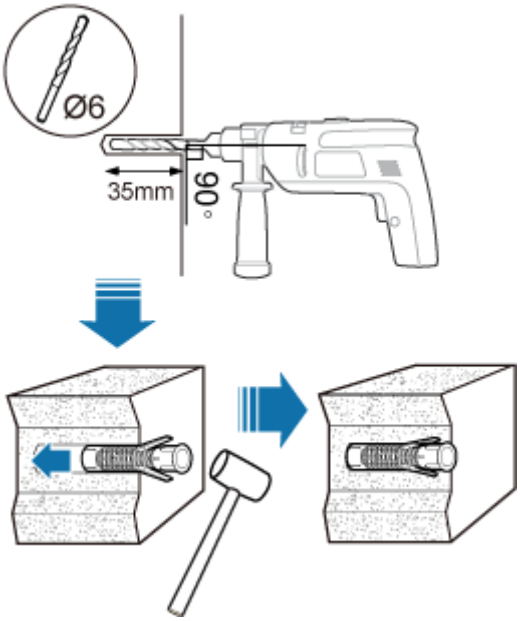

Step 3 Place the Extender in the corresponding position and use an M3 Phillips screwdriver to torque the screws to 1 N•m, as shown in Figure 8-65.

Figure 8-65 Installing the Extender

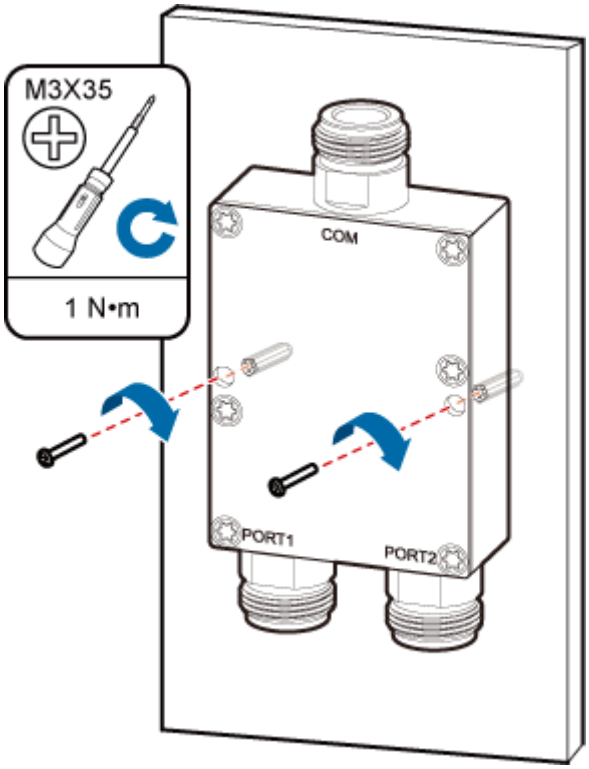

----End

Copyright © Huawei Technologies Co., Ltd.

8.6 Checking the pRRU Hardware Installation

pRRU hardware installation checking includes hardware and cable installation checking.

Table 8-11 lists the hardware installation checking items.

Table 8-11 Hardware installation checking list

No.	Item
1	Ensure that the pRRU is not grouned.
2	The position for each device conforms to the engineering design and meets the space requirement.
3	Ensure that the pRRU is properly installed.
4	The surface of the pRRUis neat and clean. The external paint is intact. The labels, tags, and nameplates are correct, legible, and complete.

Table 8-12 lists the check items of the signal cable connection.

Table 8-12 Checklist for the signal cable connection

No.	Item
1	The connectors of the signal cables must securely connected.
2	The connectors of the signal cables are intact.
3	The signal cables are intact.
4	The cable ties are evenly spaced. The signal cables are bound neatly with cable ties to proper tightness, and arranged at even intervals in the same direction.
5	The extra length of the cable ties is cut and removed. The cut surfaces of the indoor cables are smooth and have no sharp edges.
6	The cable layout facilitates maintenance and expansion.
7	Correct and clear labels are attached to both ends of the signal cables.

Table 8-13 lists the checking items for other cable connections.

Table 8-13 Checklist for other cable connections

No.	Item
1	The connectors of the other cables must securely connected.
2	Labels on the cables are legible and bound based on the engineering requirements. The cables must be bound tightly and neatly. The sheaths of the cables must not be damaged.
3	Positions for routing the cables must meet requirements of the engineering

Copyright © Huawei Technologies Co., Ltd.

No.	Item
	design.

8.7 Powering on the pRRU

This section describes the power-on check on the pRRU after the pRRU hardware is installed and checked.

Context

After the RHUB and pRRUs are installed and connected to each other, power on them no matter whether the BBU is installed.

Procedure

Step 1 Power on the pRRU.

The pRRU supports PoE. The RHUB supplies power to the pRRU in PoE mode through the CPRI_E0 port on the pRRU.

Step 2 Power on the pRRU. Wait 3 to 5 minutes, check the status of the 3GPP indicator on the pRRU.

If the 3GPP Indicator...	Because...	Then...
Blinks white at 4 Hz	The pRRU is loading software, configuring data, or it is not running.	Wait until the software is loaded. If the loading is not completed in five minutes, power off the pRRU and check whether the data configuration file is correct. After the fault is rectified, power on the pRRU again.
Blinks white at 0.5 Hz (on for 1s and off for 1s)	The pRRU is working properly and does not transmit power.	Check whether the services have been configured and power amplification have been enabled on the pRRU.
Is steady white	The cell is set up and transmits power properly.	No further action is required.
Is steady orange.	There is power input, but the hardware is faulty.	Power off the pRRU, rectify the hardware fault, and then power it on again.
Blinks orange at 0.5 Hz (on for 1s and off for 1s)	A minor alarm (indicating an HDLC link disconnection, for example) is generated.	Troubleshoot based on the alarm information.
Is off	The board is not powered on.	Turn off the power supply switch and check whether the

Copyright © Huawei Technologies Co., Ltd.

If the 3GPP Indicator...	Because...	Then...
		power input is normal. If the power input is normal, check for and rectify board faults, and turn on the power supply switch again.

NOTE

Check the indicator status 30 minutes after the power-on if a pRRU is not connected to any BBU. The pRRU is considered normally powered on when any indicator on the pRRU is on.

----End

Copyright © Huawei Technologies Co., Ltd.

9 Installing a pRRU3907 or pRRU3916

About This Chapter

This chapter describes the pRRU3907or pRRU3916 installation process. The pRRU3907 and pRRU3916 are installed in similar way, and this chapter uses the pRRU3907 as an example.

9.1 Information About the Installation

This section describes the information that you must be familiar with before installing a pRRU, including the pRRU product family, installation scenarios, installation space and environment requirements.

9.2 Installation Process

This section describes the pRRU installation process, which involves installing a pRRU, and cables, checking the pRRU hardware installation, and powering on the pRRU.

9.3 Installing a pRRU

This section describes the pRRU installation process.

9.4 Installing pRRU Cables

This chapter describes the procedures for installing pRRU cables.

9.5 Checking the pRRU Hardware Installation

pRRU hardware installation checking includes hardware and cable installation checking.

9.6 Powering on the pRRU

This section describes the power-on check on the pRRU after the pRRU hardware is installed and checked.

9.1 Information About the Installation

This section describes the information that you must be familiar with before installing a pRRU, including the pRRU product family, installation scenarios, installation space and environment requirements.

Copyright © Huawei Technologies Co., Ltd.

9.1.1 pRRU Product Family

This chapter describes the configurations and functions of the pRRU components.

Table 9-1 lists the pRRU product family.

Table 9-1 pRRU product family

Category	Equipment	Optional or Mandatory	Quantity	Function
Main equipment	pRRU3907/pRRU3916	Mandatory	1	Functions as a remote radio unit that processes RF signals.
Auxiliary device	Mounting kits	Mandatory	1	Supports the pRRU installation on a wall or pole. The mounting kits vary with the pRRU installation mode.
	Extender	Optional	1/2 **NOTE** The quantity depends on the number of Ethernet cables in use.	Extends the distance between the pRRU and RHUB.

9.1.2 Constraints and Limitations

The pRRU can be installed on a wall or pole.Installation scenarios must meet heat-dissipation and waterproofing requirements of the RRU.

Requirements for the Installation Scenarios

Application scenarios:

To ensure proper heat dissipation of the pRRU, the following requirements must be met:

- The pRRU cannot be installed in an enclosed cabinet without a cooling system.
- The pRRU cannot be installed in an enclosed camouflage box.
- The pRRU cannot be installed in an enclosed equipment room without a cooling system.
- When multiple pRRUs are installed in centralized mode, the minimum clearance requirements must be met. For details, see 9.1.3 Installation Clearance and Space Requirements.

Copyright © Huawei Technologies Co., Ltd.

NOTICE

If the pRRU is inappropriately installed, heat dissipation of the pRRU deteriorates and the pRRU may not work properly, as shown in Figure 9-1.

Figure 9-1 Inappropriately installed pRRU

Correct installation methods:

To ensure the heat dissipation of the pRRU and waterproofing of the ports at the bottom of the RRU, the vertical deviation angle of a pRRU must be less than or equal to 10°, as shown in Figure 9-2.

Figure 9-2 Requirements for the vertical deviation angle of a pRRU

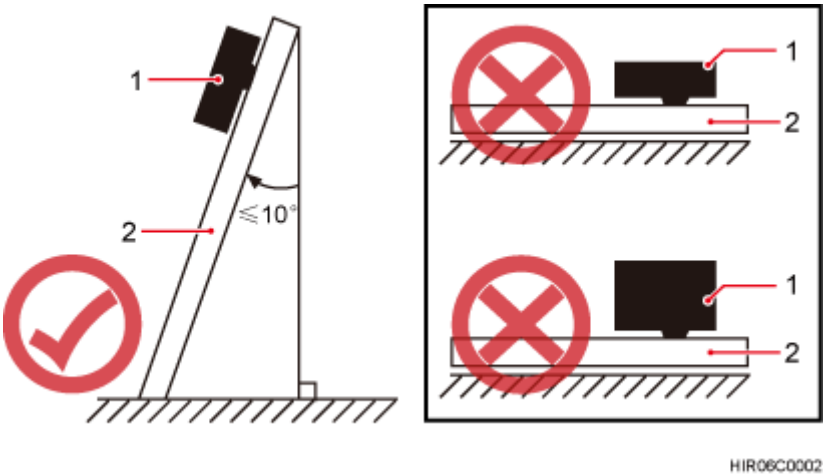

(1) pRRU (2) Installation support (pole or wall)

Table 9-2 lists the mounted suggestions of different installation scenarios.

Copyright © Huawei Technologies Co., Ltd.

Table 9-2 mounted suggestion

Installation Mode	Requirements	Mounting Brackets	Installation Diagram
Installing the pRRU on a wall For details, see9.3.2 Installing a pRRU on a Wall.	• The wall can bear a load at least four times the weight of a pRRU. • The screws must be tightened with a torque of 30 N·m. This ensures the screws work properly and the wall remains intact without cracks in it.	1. M6x60 bolt 2. Nut 3. Spring washer 4. Flat washer 5. Expansion sleeve	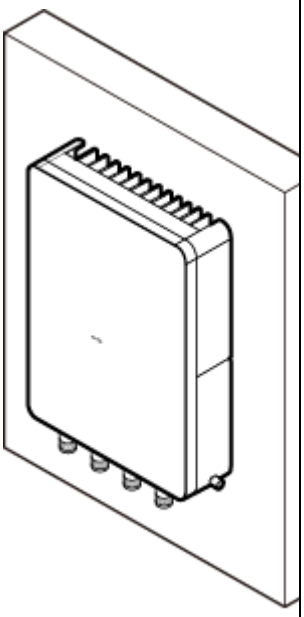
Installing the pRRU on a pole For details, see 9.3.3 Installing a pRRU on a Pole.	• The diameter of a pole for installing a pRRU ranges from 60 mm (2.36 in.) to 114 mm (4.49 in.). The recommended diameter is 80 mm (3.15 in.). • The recommended thickness of the pole wall is 3.5 mm (0.14 in.) or above.	1. Mounting kit 2. Hose clamp	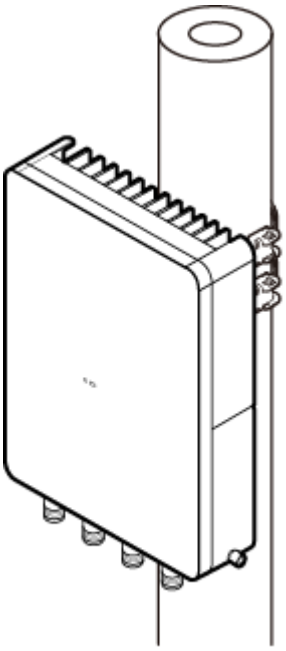

Copyright © Huawei Technologies Co., Ltd.

9.1.3 Installation Clearance and Space Requirements

This section describes the recommended and minimum clearances for a pRRU.

Clearance for a pRRU

When the pRRU is installed on a wall or pole, the minimum clearance is required for easy cabling and operation and maintenance (O&M). Based on the engineering practice, the recommendation for the installation clearance is provided.

NOTE

- The recommended clearances are for customers, ensuring normal running and providing appropriate space for O&M. If installation space is sufficient, leave the recommended clearances after installing equipment.
- The minimum clearance ensures normal operation and heat dissipation, but O&M activities such as checking indicator status and opening the cover plate of a cabling cavity cannot be properly conducted. If installation space is restricted, leave the minimum clearance after installing equipment.

Figure 9-3 show the clearances for installing a pRRU.

Copyright © Huawei Technologies Co., Ltd.

Figure 9-3 Clearances for installing a pRRU

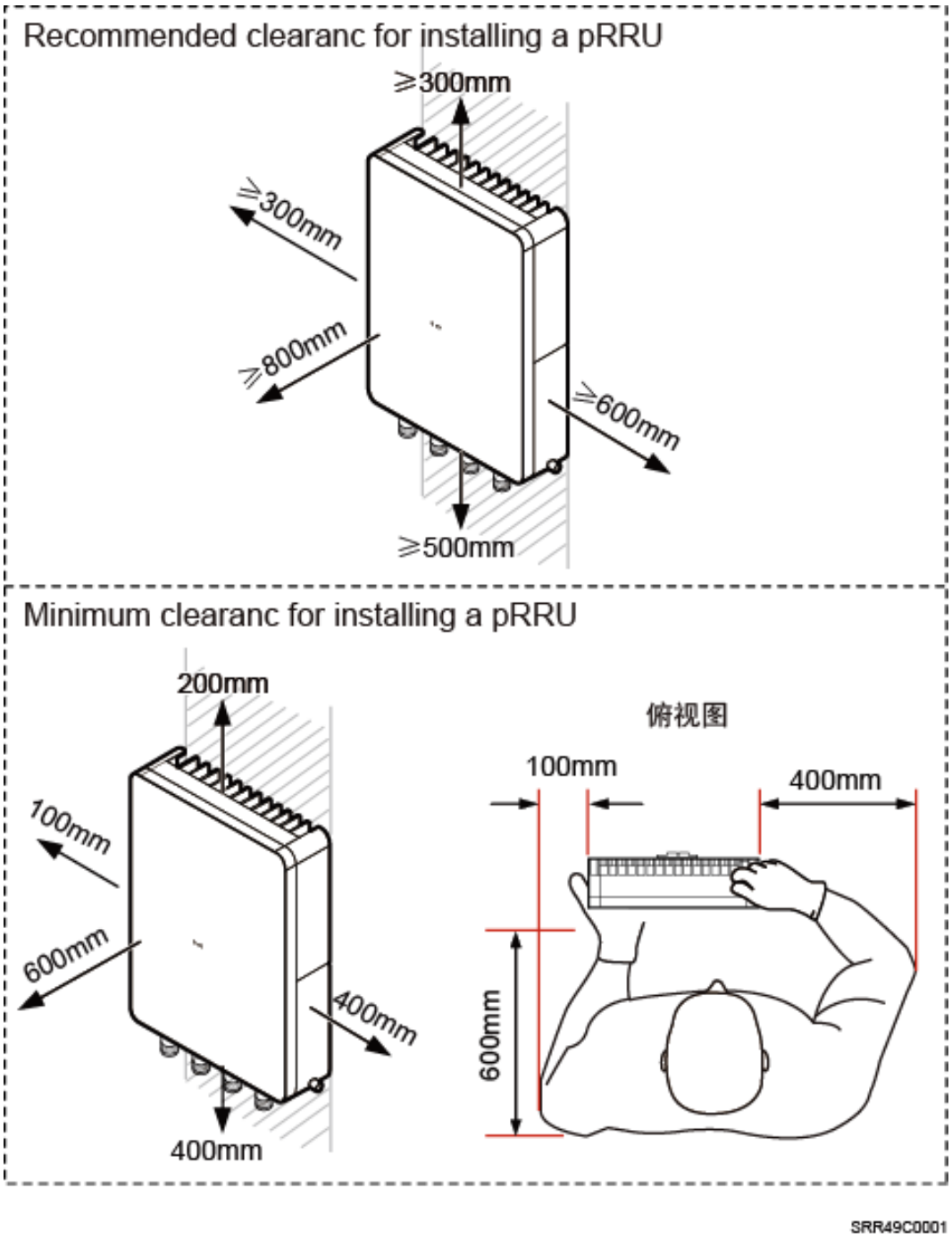

Installation Spacing Between pRRUs

Figure 9-4 lists the horizonta spacing between pRRUs.

Copyright © Huawei Technologies Co., Ltd.

Figure 9-4 Clearances for installing a pRRU

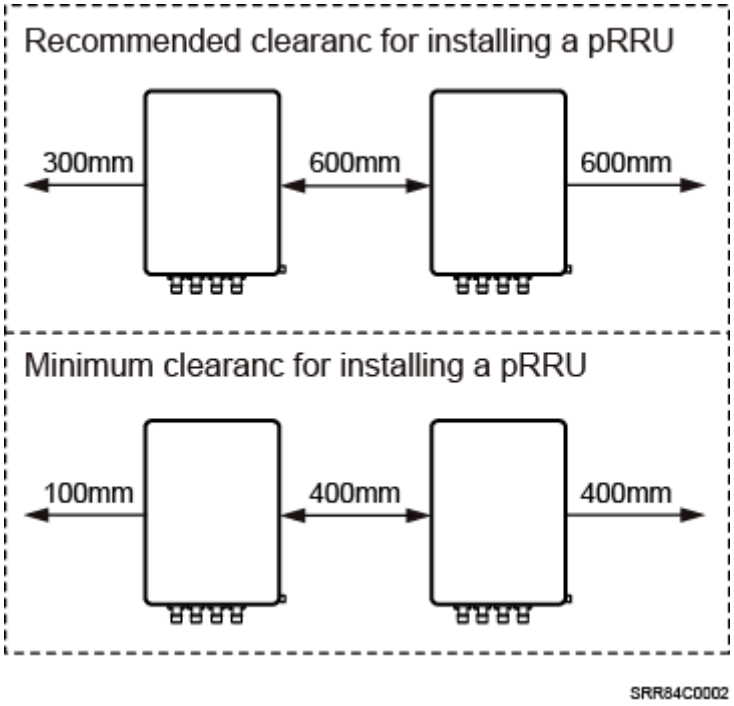

Figure 9-5 lists the vertical spacing between pRRUs.

Copyright © Huawei Technologies Co., Ltd.

Figure 9-5 Clearances for installing a pRRU

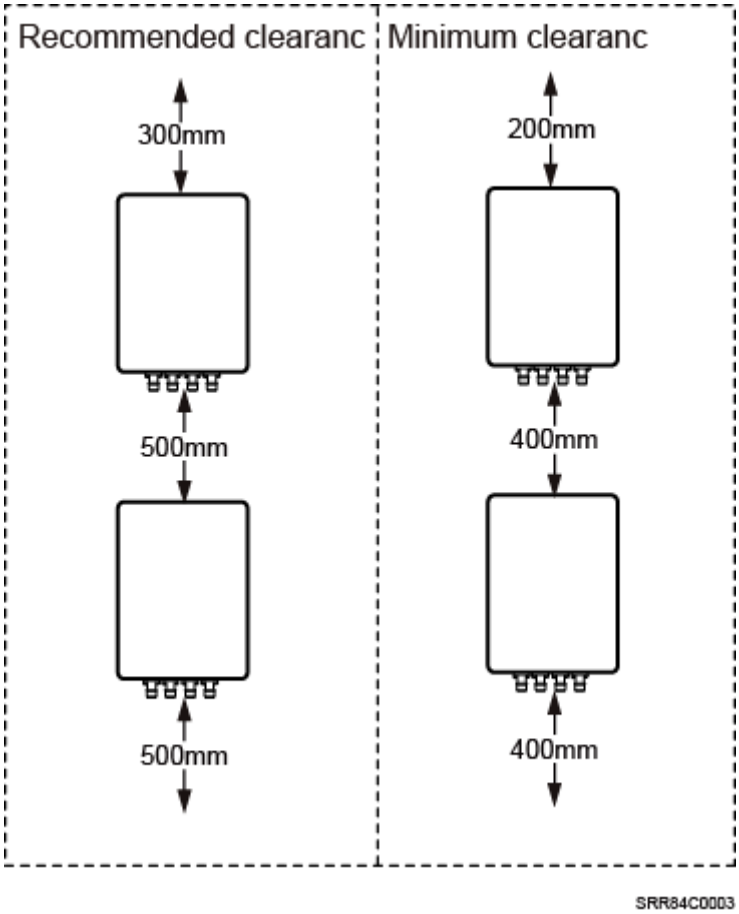

9.1.4 Installation Environment Requirements

The installation environment of a pRRU involves the running environment specifications for the pRRU.

Running Environment Specifications

Table 9-3 shows the environment specifications for the pRRU installed outdoors.

Table 9-3 pRRU environment specifications

Specifications	Condition	Remarks
Operating temperature	- 40 °C to + 50 °C	
Relative humidity	5% RH to 95% RH	-
Altitude	- 60 m to + 1800 m	Works properly.
	1800 m to 4000 m	Above the 1800 m altitude, the maximum operating temperature

Copyright © Huawei Technologies Co., Ltd.

Specifications	Condition	Remarks
		decreases by 1 °C each time the altitude increases by 220 m.

9.2 Installation Process

This section describes the pRRU installation process, which involves installing a pRRU, and cables, checking the pRRU hardware installation, and powering on the pRRU.

Figure 9-6 shows the pRRU installation process.

Figure 9-6 pRRU installation process

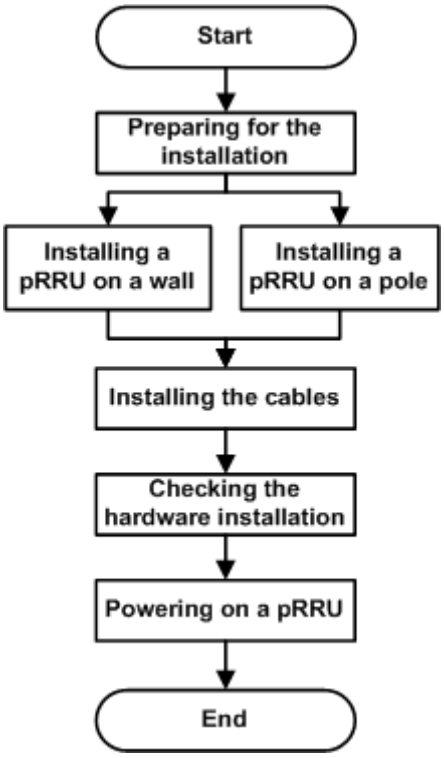

9.3 Installing a pRRU

This section describes the pRRU installation process.

9.3.1 pRRU Mounting Kits

This section describes mounting kits and attachment plates for installing pRRUs.

Figure 9-7 shows the exterior of the pRRU.

Copyright © Huawei Technologies Co., Ltd.

Figure 9-7 Front and side of a pRRU

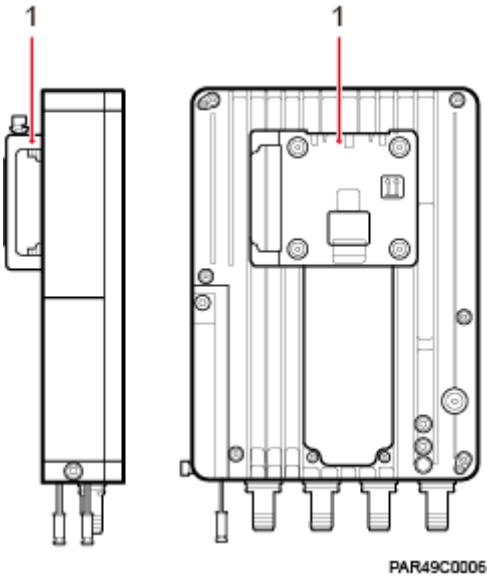

(1) Attachment plate

Figure 9-8 shows a mounting bracket and a attachment plate.

Figure 9-8 Mounting bracket and common attachment plate for installing a pRRU

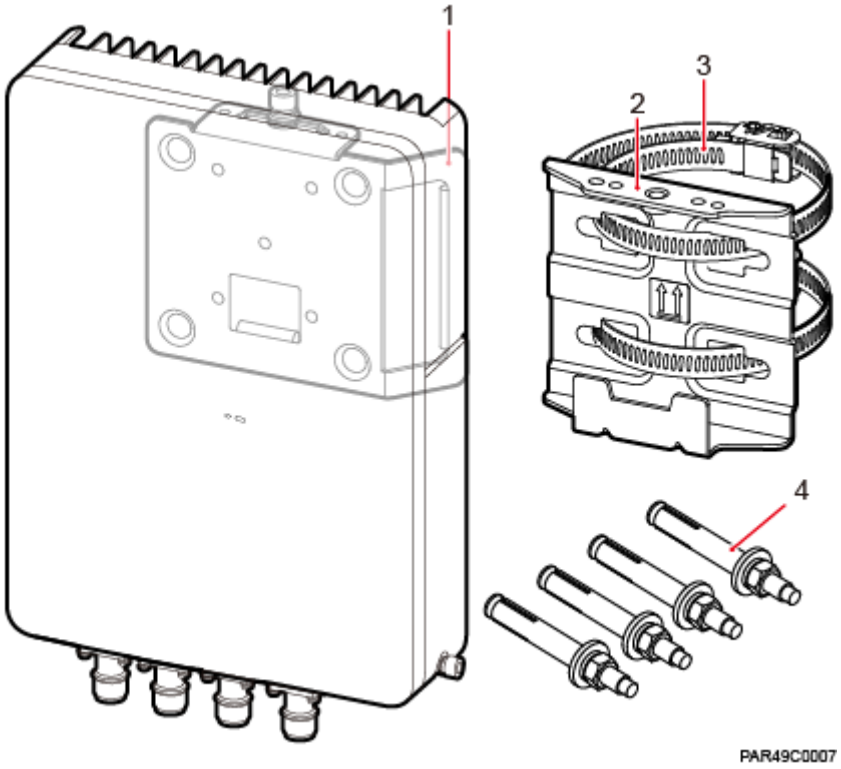

(1) Attachment plate (2) Mounting bracket (3) Hose clamp (4) Expansion bolt

Copyright © Huawei Technologies Co., Ltd.

9.3.2 Installing a pRRU on a Wall

This section describes the procedure and precautions for installing a pRRU on a wall.

Context

The wall for installing pRRUs must meet the following requirements:

- The wall must be able to bear a weight four times heavier than the pRRU's weight.
- Expansion bolts must be tightened to 30 N·m (265.52 lbf·in.) to ensure that the bolt assemblies work properly and the wall remains intact.

NOTICE

- Do not stand a pRRU upright because the RF ports cannot support the weight of the pRRU.
- Place a foam pad or cardboard under a pRRU to protect the pRRU housing from damage during the installation.

Procedure

Step 1 Determine a position for installing the pRRU on a wall, use a level to verify that the marking-off template is placed horizontally, and then use a marker to mark anchor points, as shown in Figure 9-9.

Figure 9-9 Marking anchor points

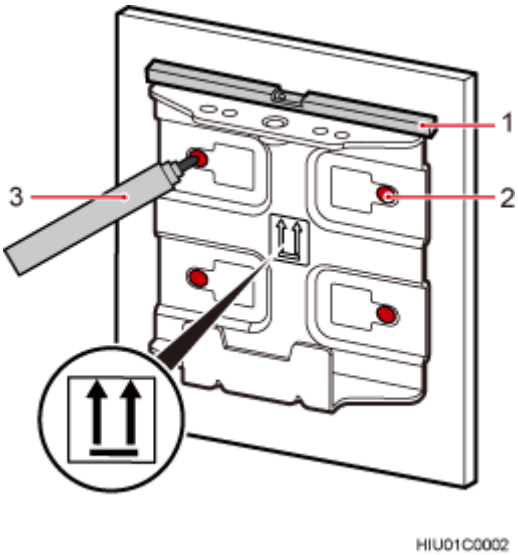

(1) Level (2) Tapped hole (3) Marker

Copyright © Huawei Technologies Co., Ltd.

NOTE

It is recommended that the separate mounting kit be 1200 mm (47.24 in.) to 1600 mm (62.99 in.) above the ground.

Step 2 Drill holes at the anchor points and install expansion bolts in the holes, as shown in Figure 9-10.

Figure 9-10 Drilling a hole and inserting an expansion bolt assembly

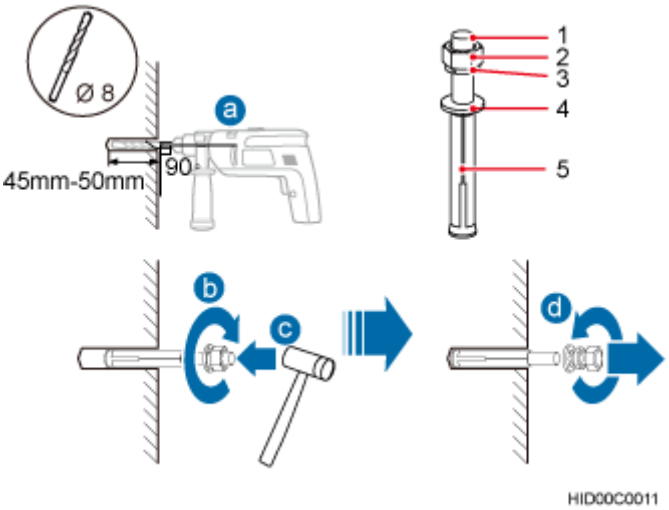

(1) M6x60 bolt (2) Nut (3) Spring washer (4) Flat washer (5) Expansion tube

1. Use a hammer drill with a φ8 bit to drill holes vertically at the marked anchor points. Ensure that the depth of each hole ranges from 45 mm (1.77 in.) to 50 mm (1.97 in.).

NOTICE

Take proper safety measures to protect your eyes and respiratory tract against the dust before drilling holes.

2. Use a vacuum cleaner to clear the dust out from inside and around the holes, and measure the distances between holes. If any of the holes is beyond the acceptable range, mark a new anchor point and drill a new hole.
3. Tighten the expansion bolts slightly, and place each expansion bolt vertically into each hole.
4. Use a rubber mallet to pound each expansion bolt until the corresponding expansion tube completely enters the hole. Leave 20 mm (0.79 in.) of the expansion bolt outside the wall.
5. Remove the M6x60 bolt, nut, spring washer, and flat washer in sequence.

Step 3 Place the mounting kit onto the wall, insert four M6x60 bolts into the tapped holes on the mounting kit, and tighten each bolt to 5 N·m (44.25 lbf·in.) to secure the mounting kit, as shown in Figure 9-11.

Copyright © Huawei Technologies Co., Ltd.

Figure 9-11 Securing the separate mounting kit

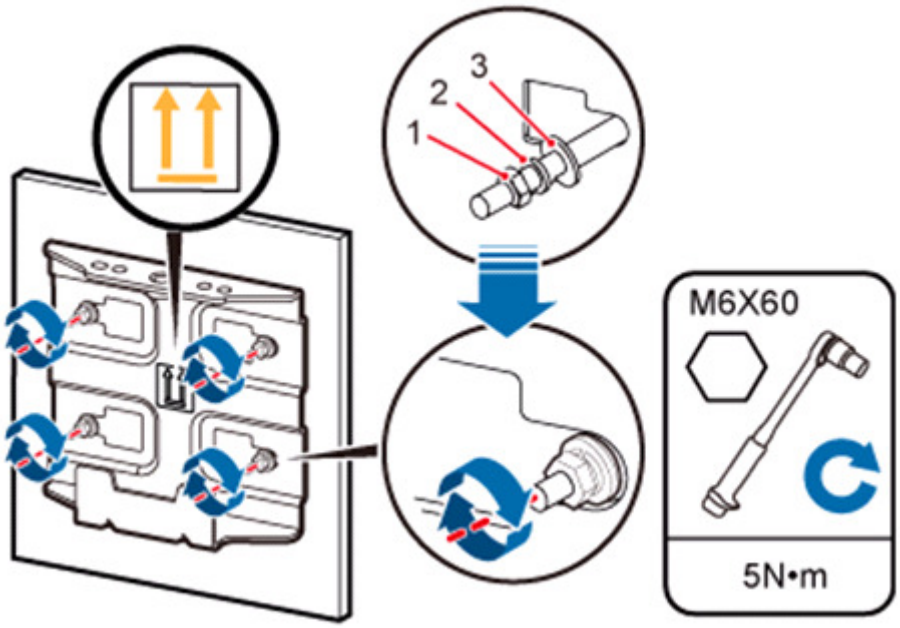

(1) Nut (2) Spring washer (3) Flat washer

Step 4 Hold the pRRU, hang the two dowels on the top of the pRRU attachment plate onto the separate mounting kit, and push the pRRU until it snaps into place, as shown by illustrations a and b in Figure 9-12.

Step 5 Use the M6 inner hexagon screwdriver to tighten the screw on the top of the separate attachment plate to 7 N·m (61.96 lbf·in.), as shown by illustration c in Figure 9-12.

Copyright © Huawei Technologies Co., Ltd.

Figure 9-12 Securing the pRRU onto the mounting kit

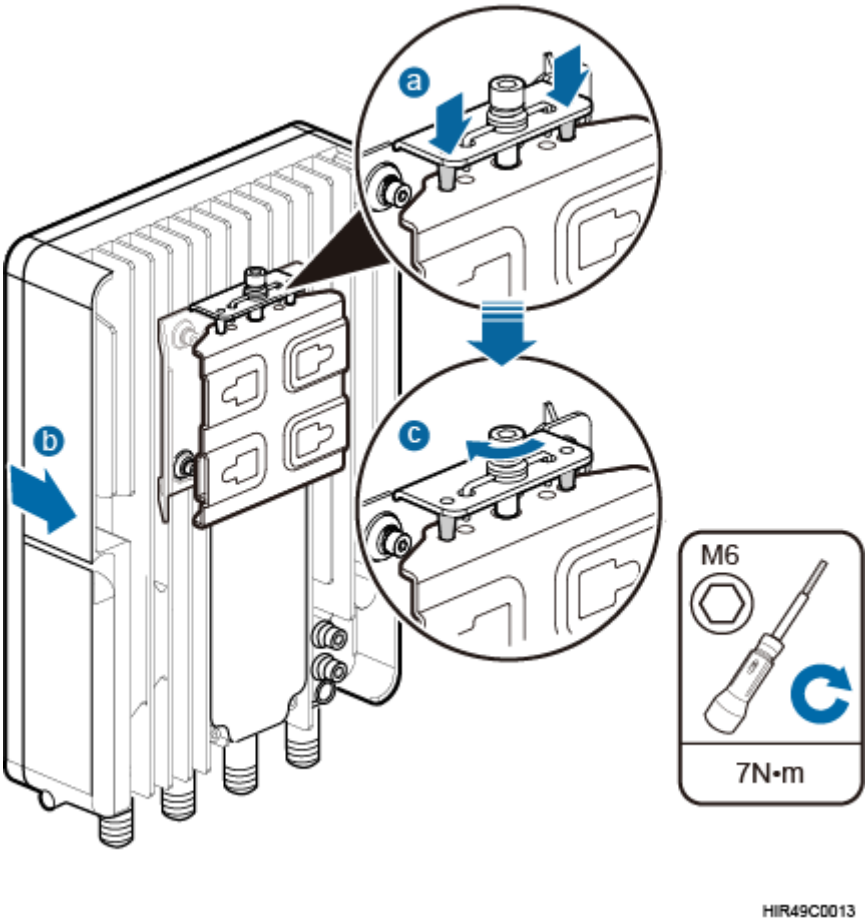

----End

9.3.3 Installing a pRRU on a Pole

This section describes the procedure and precautions for installing a pRRU on a pole.

Context

- Do not stand a pRRU upright because the RF ports cannot support the weight of the pRRU.
- Place a foam pad or cardboard under a pRRU to protect the pRRU housing from damage during the installation.

Procedure

Step 1 Determine a position for installing the separate mounting kit, as shown in Figure 9-13.

Copyright © Huawei Technologies Co., Ltd.

Figure 9-13 Distance between the separate mounting kit and the ground

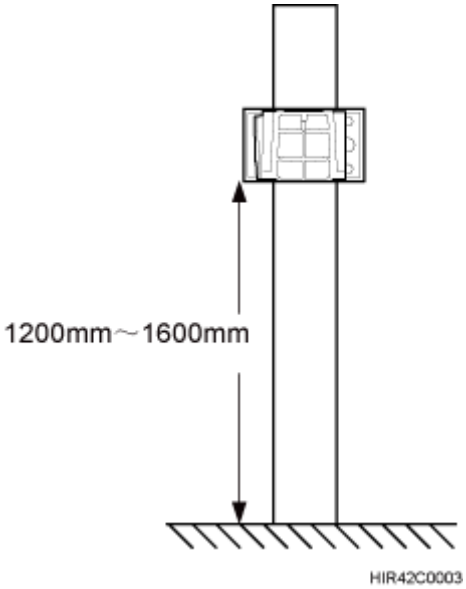

NOTE

It is recommended that the separate mounting kit be 1200 mm (47.24 in.) to 1600 mm (62.99 in.) above the ground.

Step 2 Install the mounting kit, as shown in Figure 9-14.

Figure 9-14 Installing a pRRU mounting kit

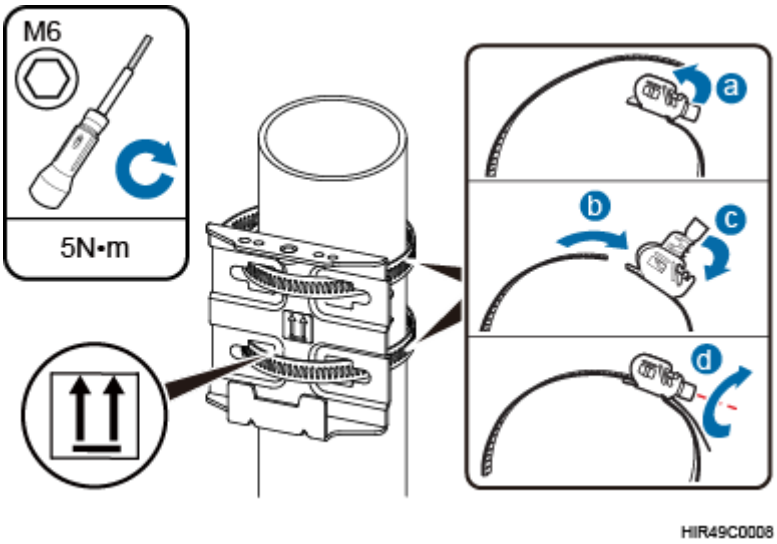

1. Determine a position for installing the pRRU. Then, place the separate mounting kit onto the pole, thread the hose clamp through the mounting kit, and encircle the pole with the hose clamp, as shown by illustrations a, b, and c in Figure 9-14.
2. Use an M6 inner hexagon screwdriver to tighten the bolt on each hose clamp to 5 N·m (44.25 lbf·in.) to secure the mounting kit, as shown by illustration d in Figure 9-14.

Step 3 Secure the pRRU onto the separate mounting kit, as shown in Figure 9-15.

Copyright © Huawei Technologies Co., Ltd.

Figure 9-15 Securing the pRRU onto the mounting kit

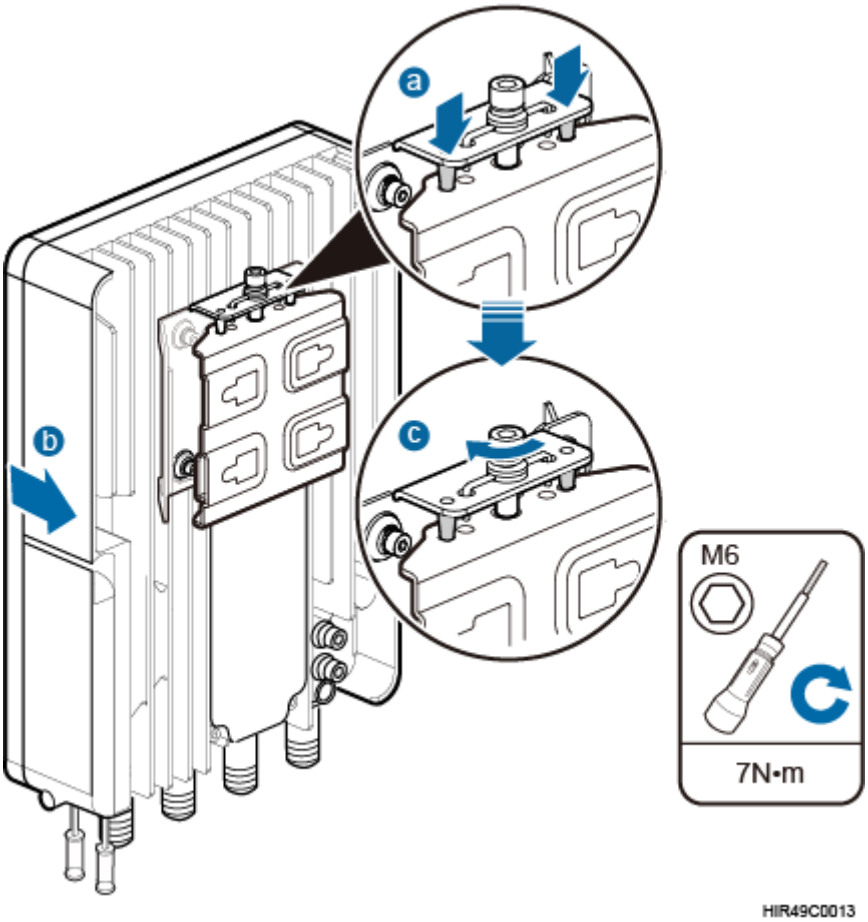

1. Hang the two dowels on the top of the pRRU attachment plate onto the mounting kit, and push the pRRU until it snaps into place, as shown by illustrations a and b in Figure 9-15.
2. Use the M6 inner hexagon screwdriver to tighten the screw on the top of the attachment plate to 7 N·m (61.96 lbf·in.), as shown by illustration c in Figure 9-15.

----End

9.4 Installing pRRU Cables

This chapter describes the procedures for installing pRRU cables.

9.4.1 Cabling Requirements

Cables must be laid out according to the specified cabling requirements to prevent signal interference.

NOTE

If a cable listed below is not required, skip the cabling requirements of the cable.

Copyright © Huawei Technologies Co., Ltd.

General Cabling Requirements

Bending radius requirements

- The bending radius of a 7/8" feeder must be greater than 250 mm (9.84 in.), and the bending radius of a 5/4" feeder must be greater than 380 mm (14.96 in.).
- The bending radius of a 1/4" jumper must be greater than 35 mm (1.38 in.). The bending radius of a super-flexible 1/2" jumper must be greater than 50 mm (1.97 in.), and the bending radius of an ordinary 1/2" jumper must be greater than 127 mm (5.00 in.).
- The bending radius of a PGND cable must be at least three times its diameter.
- The bending radius of a signal cable must be at least five times its diameter.

Cable binding requirements

- Cables of the same type must be bound together.
- Different types of cables must be separately laid out and bound, with a minimum distance of 30 mm (1.18 in.) from each other.
- Cables must be bound tightly and neatly. The sheaths of cables must not be damaged.
- Cable ties must face the same direction, and those at the same horizontal line must be in a straight line.
- The excess of indoor cable ties must be cut off. The excess of 5 mm (0.197 in.) of outdoor cable ties should be reserved, and the cut surfaces must be smooth without sharp edges.
- After cables are installed, labels or nameplates must be attached to the cables at their ends, curves, and interconnection positions.

Security requirements

- When laying out cables, avoid sharp objects, for example sharp edges on the wall. If necessary, use tubes to protect the cables.
- When laying out cables, keep cables away from heat sources, or use heat insulation materials to insulate the cables from the heat sources.
- Reserve a proper distance (0.1 m [3.937 in.] is recommended) between equipment and cables especially at the cable curves to protect the cables and equipment.

Indoor cabling requirements

- Route each cable into the room through the feeder window.
- Reserve drip loops for all cables outside the feeder window before routing them into the room. Ensure that the radiuses of the drip loops are greater than or equal to the minimum bending radiuses of the cables.
- When routing a cable into the room, ensure that a person is assisting you in the room.
- Apply waterproof treatment to the feeder window.

Outdoor Cabling Requirements

- Protect outdoor cables against potential damage. For example, thread the cables through tubes.
- Cables to be protected include AC power cables, transmission cables, and cables laid out underground.
- Use cable clips to secure cables outdoors.
- Arrange cables neatly along the routing direction and use cable clips to secure the cables.

Copyright © Huawei Technologies Co., Ltd.

- Determine the positions where the clips are installed according to the actual situation. For example, 7/8" feeders are secured with clips at an interval of 1.5 m (4.92 ft) to 2 m (6.56 ft), and CPRI fiber optic cables and power cables are secured with clips at an interval of 1 m (3.28 ft) to 1.5 m (4.92 ft). Ensure that the clips are evenly spaced and in the same direction.
- When fastening cables with a clip, ensure that the cables are aligned neatly and are routed through the holes in the clip. Do not stretch the cables too tightly.
- When using clips to secure cables, tighten the screws on the clips after all cables are arranged and laid out.

Special Cabling Requirements

Cabling of PGND cables

- PGND cables for a base station must be connected to the same ground bar.
- PGND cables must be buried in the ground or routed indoors.
- The external conductor of the coaxial wire and the shield layer of the shielded cable must have proper electrical contact with the metal surface of the equipment which they are connected to.
- PGND cables and signal cables must be installed separately. A certain distance must be reserved between them to prevent interference from each other.
- Switches or fuses must not be installed on the PGND cables.
- Other devices must not be used for electrical connections of the PGND cables.
- All the metal parts in the housing of the equipment must be reliably connected to the ground terminal.

9.4.2 pRRU Cable List

This section describes pRRU cables, connectors added to the pRRU cables, and installation positions for both ends of each cable.

Table 9-4 List of pRRU3901 cables

Cable	One End		The Other End	
	Connector	Connected to ...	Connector	Connected to ...
Ethernet Cable	RJ45 connector	CPRI_E0~CPRI_E7 port on RHUB	RJ45 connector	CPRI_E0~CPRI_E1 port on pRRU
	RJ45 connector	Transmission port on Access Control(AC)	RJ45 connector	• GE port on pRRU3901 • CPRI_E1 port on pRRU3911/pRRU3911+WIFI
(Optional) RF Jumper	SMA straight male connector/Type	External antenna TX/RX RF	Based on the port model of the antenna	Antenna system

Copyright © Huawei Technologies Co., Ltd.

Cable	One End		The Other End	
	Connector	Connected to ...	Connector	Connected to ...
	N male connector	port on pRRU	system.	

9.4.3 pRRU3907 Cable Connections

This section describes pRRU3907 cable connections.

Figure 9-16 shows the cable connections when a pRRU3907 is installed.

Figure 9-16 Cable connections when a pRRU3907 is installed

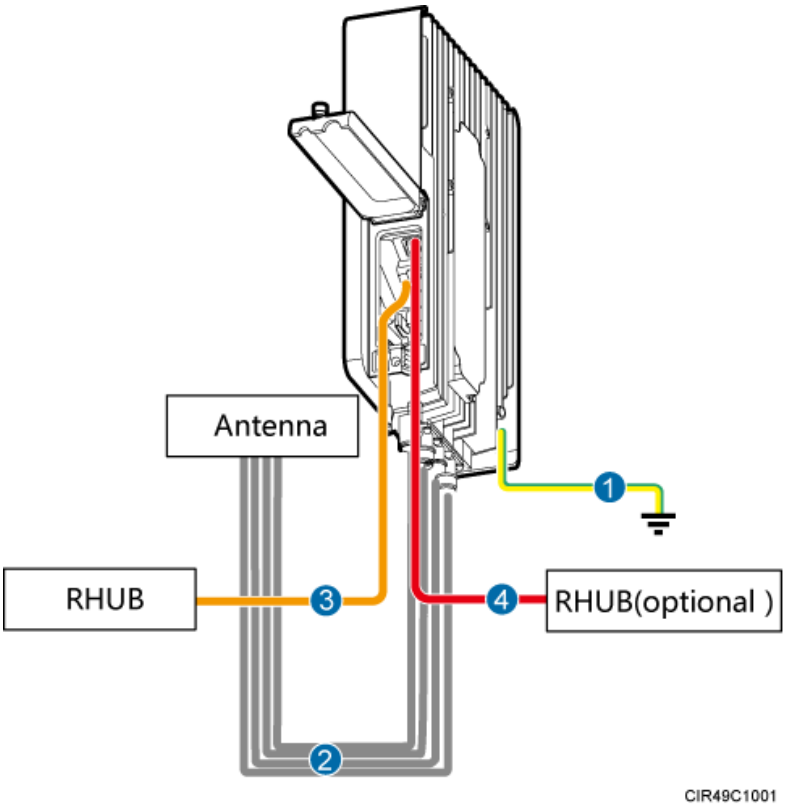

(1) pRRU3907 PGND cable (2) pRRU3907 RF jumper (3) pRRU3907 Ethernet cable (4) pRRU3907 Ethernet cable

9.4.4 pRRU3916 Cable Connections

This section describes pRRU3916 cable connections.

Figure 9-17 shows the cable connections when a pRRU3916 is installed.

Copyright © Huawei Technologies Co., Ltd.

Figure 9-17 Cable connections when a pRRU3916 is installed

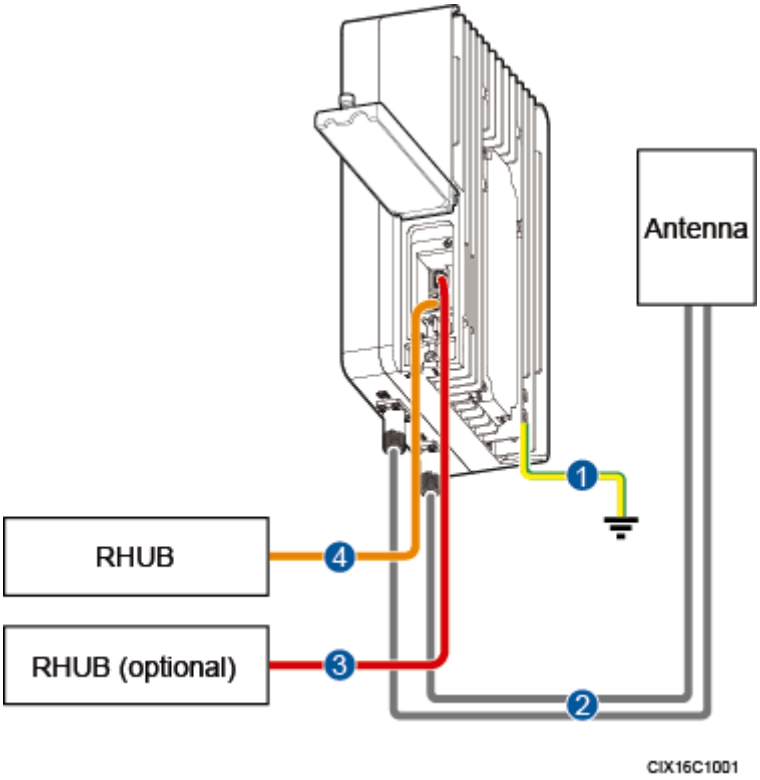

(1) pRRU3916 PGND cable	(2) pRRU3916 RF jumper	(3) pRRU3916 Ethernet cable	(4) pRRU3916 Ethernet cable

9.4.5 pRRU cable installation process

This section describes the process of installing pRRU cables.

Figure 9-18 shows the process of installing pRRU cables.

Copyright © Huawei Technologies Co., Ltd.

Figure 9-18 pRRU cable installation process

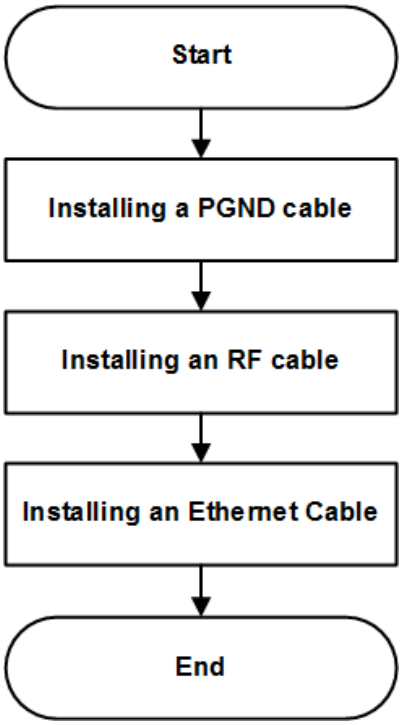

9.4.6 Installing a PGND Cable

This section describes the procedure for installing a PGND cable.

Procedure

Step 1 Prepare a pRRU PGND cable.

1. Cut the cable to a length suitable for the actual cable route.
2. Add OT terminals to both ends of the cable by following the instructions in Assembling the OT Terminal and the Power Cable.

Step 2 Install the pRRU PGND cable.

Connect one end of the PGND cable with an M6 OT terminal to the ground terminal at the RRU bottom and the other end of the cable with an M8 OT terminal to the external ground bar, as shown in Figure 9-19.

Copyright © Huawei Technologies Co., Ltd.

Figure 9-19 Installing a pRRU PGND cable

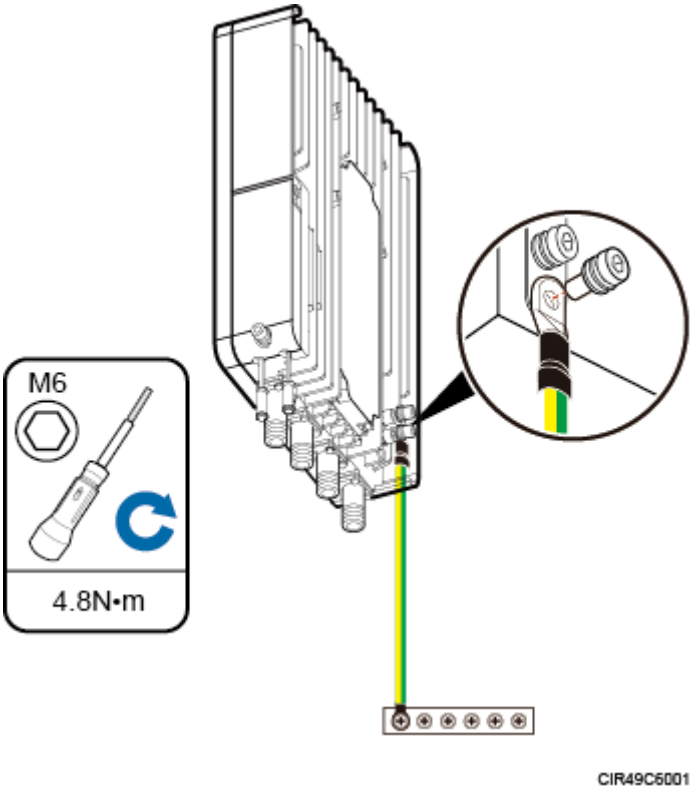

NOTE
Crimp OT terminals in correct directions, as shown in Figure 9-20.

Figure 9-20 Correct direction for crimping an OT terminal

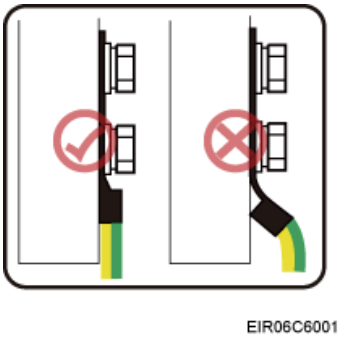

Step 3 Label the installed cable by following the instructions in 15.5 Attaching a Sign Plate Label.

----End

9.4.7 Installing a pRRU3907 RF Jumper

This section describes the procedure for installing an RF jumper.

Copyright © Huawei Technologies Co., Ltd.

Procedure

Step 1 Remove the dustproof cap from the ANT port to be used on the pRRU3907.

Step 2 Connect the type N male connector at one end of the pRRU3907 RF jumper to the ANT port at the bottom of the pRRU3907 in sequence, and use a torque wrench to tighten the connector to 1 N·m (8.85 lbf·in.), as shown in Figure 9-21.

Figure 9-21 Installing an RF jumper

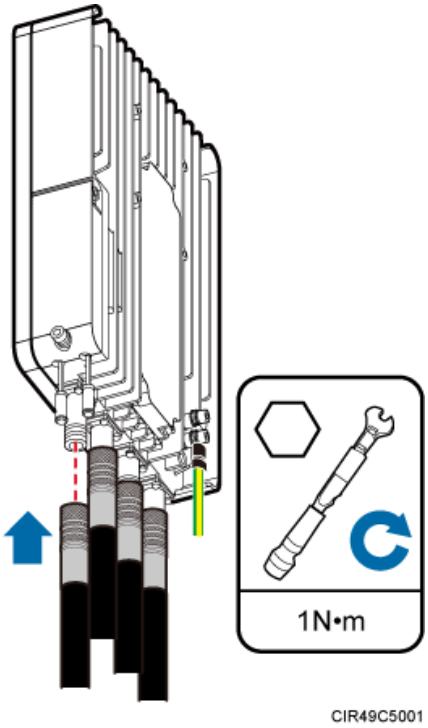

Step 3 Connect the other end of the pRRU3907 RF jumper to the external antenna system.

Step 4 Waterproof the connector of the RF jumper by cold shrink sleeve, as shown in Figure 9-22.

Copyright © Huawei Technologies Co., Ltd.

Figure 9-22 Waterproofing the connector of the RF jumper

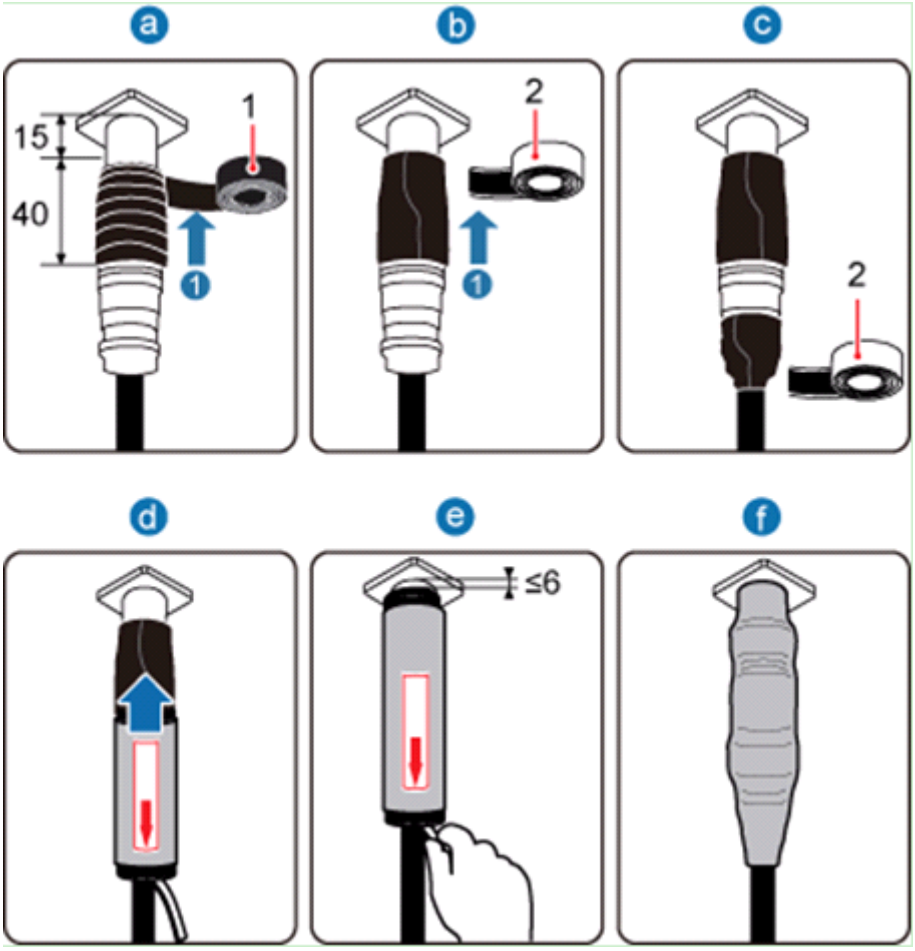

NOTICE

- Wrap cold shrink sleeves around the RF jumpers before installing the connectors.
- Do not rotate the adjacent connectors of a connector that has been wrapped with a cold shrink sleeve. Otherwise, the cold shrink sleeve may be damaged.
- During installation, ensure that no foreign substance, including sand, enters the sleeve.

1. Wrap a PVC insulation tape around the exposed area of the connector. The wrapped area is 15 mm away from the end of the connector, with a total length of 40 mm.
2. Ensure that dimensions (L x W) of the waterproof tape is 50 mm x 50 mm. Stretch the tape horizontally until it is twice of the original length and wrap it around the upper area of the connector.

   Ensure that the upper end of the waterproof tape overlays that of the PVC insulation tape.
3. Push the cold shrink sleeve to the end of the pRRU3907 connector while gently pulling out the support strip along the jumper until the sleeve shrinks and secures the connector.
4. Pull out the support strip along the direction indicated by the arrow.

Copyright © Huawei Technologies Co., Ltd.

CAUTION

Ensure that the sleeve shrinks around the end of the pRRU3907 connector and that the upper end of the sleeve and the connector end is 6 mm apart or less.

Step 5 Check the dustproof caps on antenna connectors. In outdoor scenarios, dustproof caps must be waterproofed, as shown in Figure 9-23.

NOTICE

Do not remove dustproof caps from vacant antenna connectors.

Figure 9-23 Waterproofing a dustproof cap

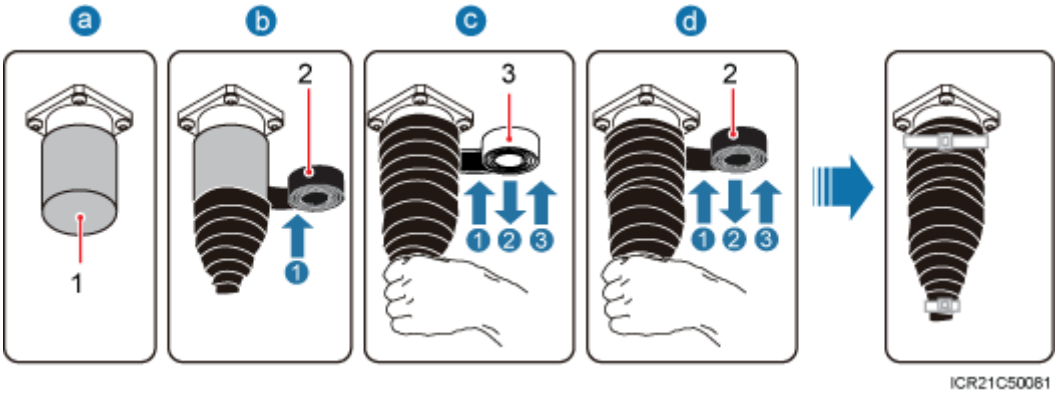

(1) Dustproof cap (2) PVC insulation tape (3) Waterproof tape

1. Verify that dustproof caps are not removed.
2. Wrap one layer of PVC insulation tape on each connector from bottom up.
3. Wrap three layers of waterproof tape on each connector, first from bottom up, then from top down, and finally from bottom up. Wrap each layer of the tape around the connector tightly.
4. Wrap three layers of PVC insulation tape on each connector, first from bottom up, then from top down, and finally from bottom up. Wrap each layer of the tape around the connector tightly.

NOTE

- When wrapping waterproof tape, stretch the tape evenly until it is twice of the original length. When wrapping PVC insulation tape, do not stretch it.
- Wrap each layer of tape around each connector tightly and neatly, and ensure that the adhesive surface of each layer of tape overlaps more than 50% of the lower layer.
- When cutting off a cable tie, reserve a surplus length of 3 mm (0.12 in.) to 5 mm (0.20 in.).

----End

Copyright © Huawei Technologies Co., Ltd.

Follow-up Procedure

1. Route the cable by following the instructions in section 9.4.1 Cabling Requirements and use cable ties to bind the cable.
2. Label the installed cable. For details, see section 15.5 Attaching a Sign Plate Label and Attaching the Color Ring.

9.4.8 Installing a pRRU3916 RF Jumper

This section describes the procedure for installing a pRRU3916 RF jumper.

Procedure

Step 1 Remove the dustproof cap from the RF port to be used on the an pRRU3916.

Step 2 Connect the type N male connector at one end of each pRRU3916 RF jumper to the ANT port at the bottom of the pRRU3916 in sequence, and use a torque wrench to tighten the connector to 1 N·m (8.85 lbf·in.), as shown in Figure 9-24.

Figure 9-24 Installing a pRRU3916 RF jumper

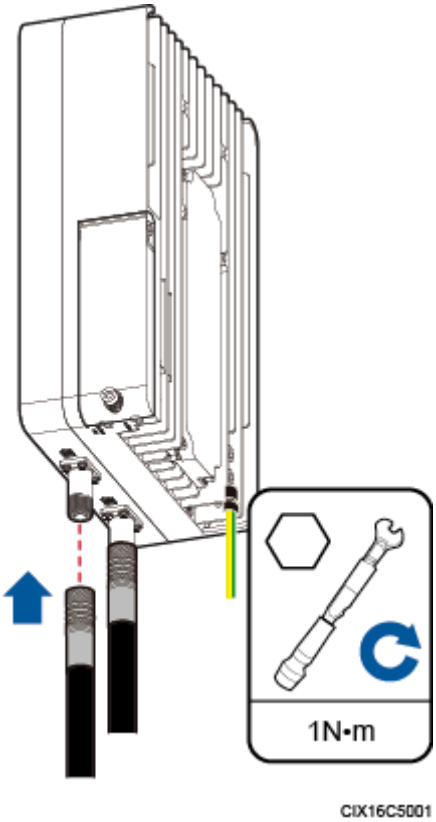

Step 3 Connect the other end of the pRRU3916 RF jumper to the external antenna system.

Step 4 Waterproof the ANT port on each pRRU3916 and the BTS and ANT ports on the external auxiliary filter (AUF), as shown in Figure 9-25.

Copyright © Huawei Technologies Co., Ltd.

Figure 9-25 Waterproofing a connector of an RF jumper

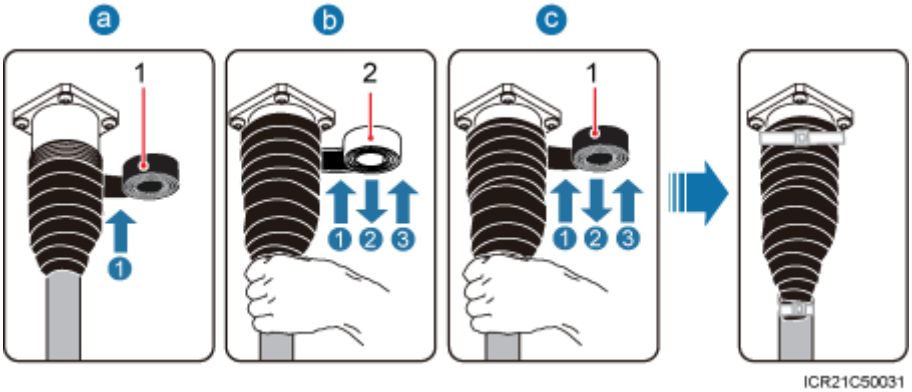

(1) PVC insulation tape	(2) Waterproof tape

1. Ensure that dustproof caps are not removed.
2. Wrap one layer of PVC insulation tape on each connector from bottom up.
3. Wrap three layers of waterproof tape on each connector, first from bottom up, then from top down, and finally from bottom up. Wrap each layer of the tape around the connector tightly.
4. Wrap three layers of PVC insulation tape on each connector, first from bottom up, then from top down, and finally from bottom up. Wrap each layer of the tape around the connector tightly.

NOTE

- When wrapping waterproof tape, stretch the tape evenly until it is twice of the original length. When wrapping PVC insulation tape, do not stretch it.
- Wrap each layer of tape around each connector tightly and neatly, and ensure that the adhesive surface of each layer of tape overlaps more than 50% of the lower layer.
- When cutting off a cable tie, reserve a surplus length of 3 mm (0.12 in.) to 5 mm (0.20 in.).

Step 5 If a pRRU3916 with an external antenna is to be installed, do not remove the dustproof cap from an unused RF port. Waterproof this RF port, as shown in Figure 9-26.

Figure 9-26 Waterproofing an RF port with a dustproof cap

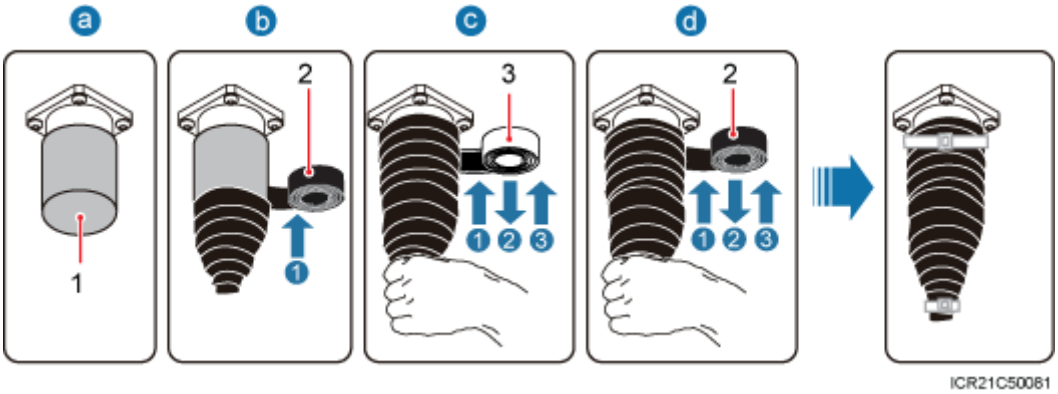

(1) Dustproof cap (2) PVC insulation tape (3) Waterproof tape

Copyright © Huawei Technologies Co., Ltd.

1. Ensure that dustproof caps are not removed.
2. Wrap one layer of PVC insulation tape on each connector from bottom up.
3. Wrap three layers of waterproof tape on each connector, first from bottom up, then from top down, and finally from bottom up. Wrap each layer of the tape around the connector tightly.
4. Wrap three layers of PVC insulation tape on each connector, first from bottom up, then from top down, and finally from bottom up. Wrap each layer of the tape around the connector tightly.

NOTE

- When wrapping waterproof tape, stretch the tape evenly until it is twice of the original length. When wrapping PVC insulation tape, do not stretch it.
- Wrap each layer of tape around each connector tightly and neatly, and ensure that the adhesive surface of each layer of tape overlaps more than 50% of the lower layer.
- When cutting off a cable tie, reserve a surplus length of 3 mm (0.12 in.) to 5 mm (0.20 in.).

Step 6 Route the cable by following the instructions in section "Cabling Requirements" and use cable ties to bind the cable.

Step 7 Label the installed cable. For details, see section 15.5 Attaching a Sign Plate Label and Attaching the Color Ring.

----End

9.4.9 Opening the Cover Plate of a pRRU Cabling Cavity

This section describes the procedure for opening the cover plate of a pRRU cabling cavity.

Procedure

Step 1 Wear ESD gloves.

NOTICE

Take proper ESD protection measures, for example, wear ESD gloves, to prevent electrostatic damage to boards, modules, or electronic components.

Step 2 Use an M6 inner hexagon screwdriver to loosen the screw on the cover plate of the pRRU cabling cavity, and open the cover plate, as shown in Figure 9-27.

Copyright © Huawei Technologies Co., Ltd.

Figure 9-27 Opening the cover plate of the pRRU cabling cavity

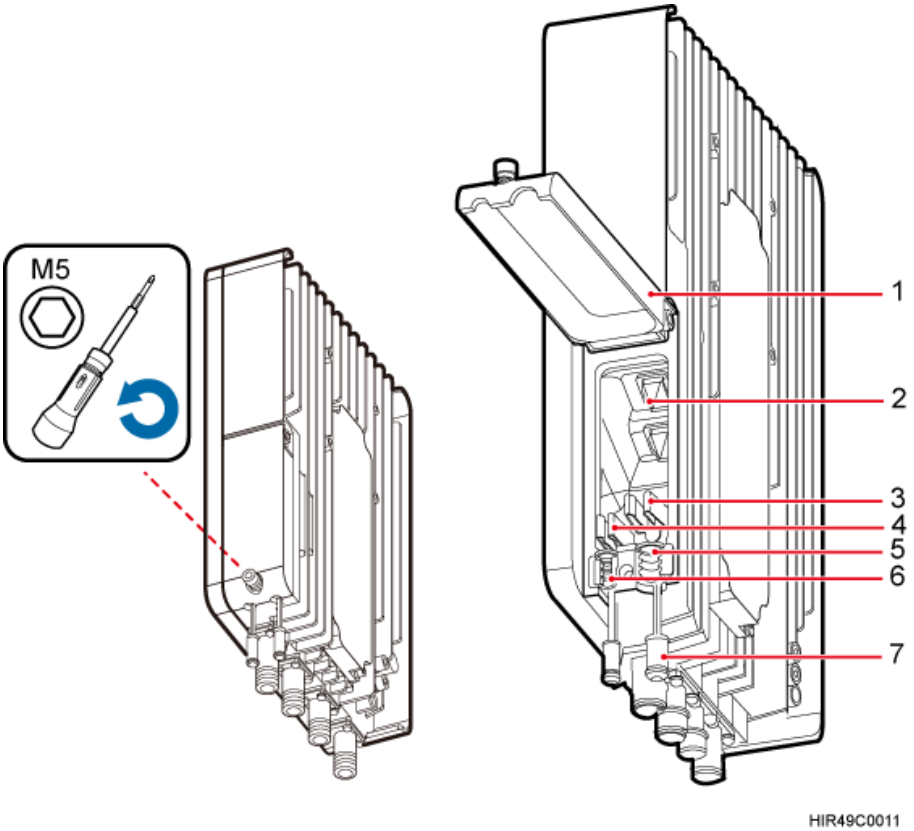

(1) Cover plate	(2) Cabling cavity	(3) Cable clip for Ethernet cables
(4) Cable clip for Ethernet cables	(5) Cable trough for Ethernet cables	(6) Cable trough for Ethernet cables
(7) Waterproof block	-	-

Step 3 Remove the waterproof block.

NOTE
Remove only the waterproof blocks for cables to be installed.

----End

9.4.10 Installing an Ethernet Cable

This section describes how to install an Ethernet cable.

Context

- The Ethernet cable must be of Category 5e (enhanced) or higher.
- With the internal PoE module providing power, the maximum length of an Ethernet cable is 100 m. With the Extender, the distance of the pRRU and RHUB can be extended by the Extender up to a total distance of 200 m.

Copyright © Huawei Technologies Co., Ltd.

- Ethernet cables are not delivered, and they must be prepared onsite. You need to use a network cable tester to test the Ethernet cable connection.
- The Ethernet cable has the following functions:
  - Provides power supply for the pRRU when the cable connects the CPRI_E0 port on the pRRU to the RHUB.
  - Transmits CPRI signals between an RHUB and a pRRU.

Procedure

Step 1 Connect the RJ45 connector at one end of the Ethernet cable to the PoE port on the pRRU panel, and push the cables into the cable clips.

Step 2 **Optional:** Connect the RJ45 connector at the other end of the Ethernet cable to the output port of the Extender. Then, connect the RJ45 connector at one end of another Ethernet cable to the input port of the Extender.

In this scenario, the Ethernet cable is divided into two parts, one between the RHUB and the Extender and the other between the Extender and the pRRU.

Step 3 Connect the RJ45 connector at the other end of the Ethernet cable to any port ranging from CPRI_E0 to CPRI_E7 on the RHUB panel based on the engineering design, as shown in Figure 9-28.

Copyright © Huawei Technologies Co., Ltd.

Figure 9-28 Installing an Ethernet cable

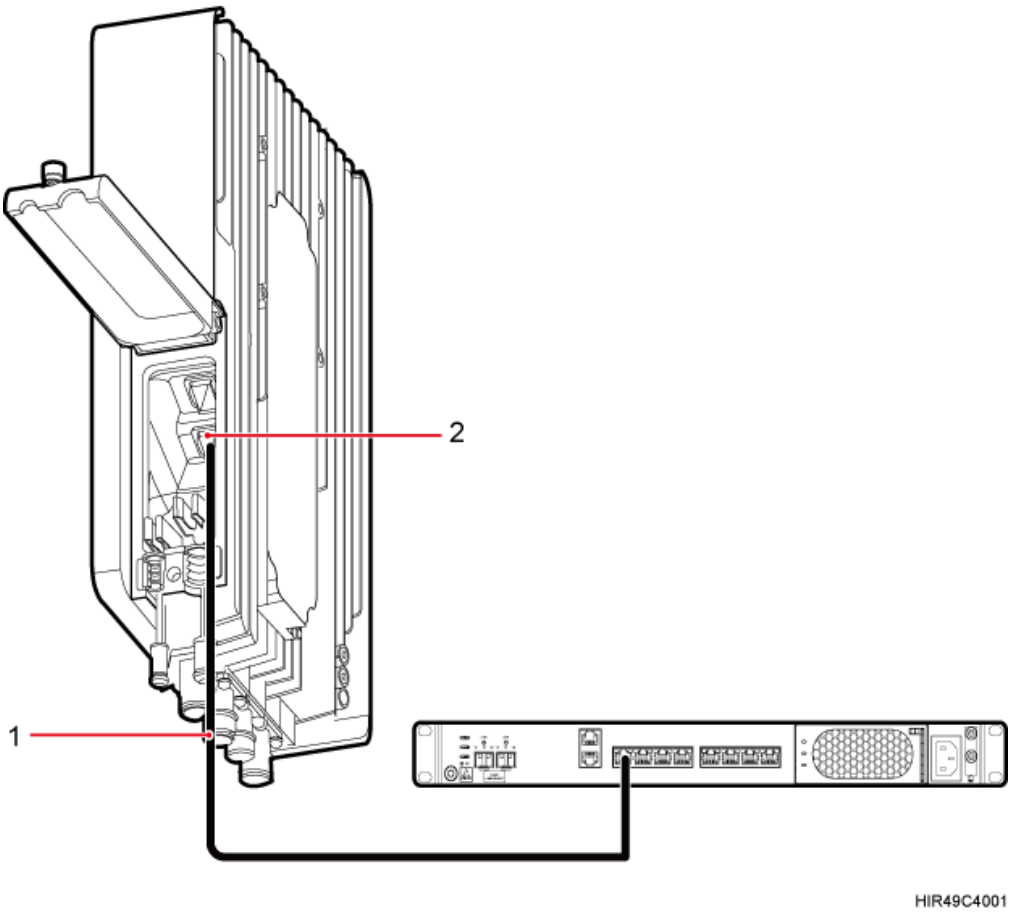

(1) Ethernet cable (2) CPRI_E0 port on the pRRU

NOTE

The connection mode of CPRI_E0 port is the same to that of CPRI_E1 port on pRRU, and this chapter uses CPRI_E0 as an example.

----End

Follow-up Procedure

1. Route the cable by following the instructions in section 9.4.1 Cabling Requirements and use cable ties to bind the cable.
2. Label the installed cable. For details, see section 15.5 Attaching a Sign Plate Label.

9.4.11 Closing the Cover Plate of a pRRU Cabling Cavity

This section describes the procedure for closing the cover plate of a pRRU cabling cavity.

Copyright © Huawei Technologies Co., Ltd.

Procedure

Step 1 Insert waterproof blocks into vacant cable troughs in the cabling cavity, as shown in Figure 9-29. Figure 9-29 is for reference only and vacant cable troughs must be blocked based on onsite requirements.

NOTICE

Ensure that cables and waterproof blocks are properly inserted into troughs.

Figure 9-29 Correct placement of waterproof blocks

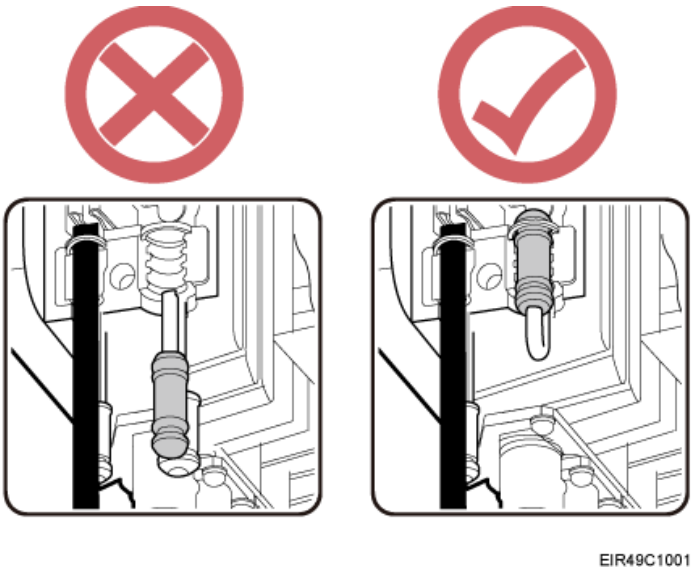

Step 2 Close the cover plate of the pRRU cabling cavity, and use an M6 inner hexagon screwdriver to tighten the screw on the cover plate to 4.8 N·m (42.48 lbf·in.), as shown in Figure 9-30.

Copyright © Huawei Technologies Co., Ltd.

Figure 9-30 Closing the cover plate of a pRRU cabling cavity

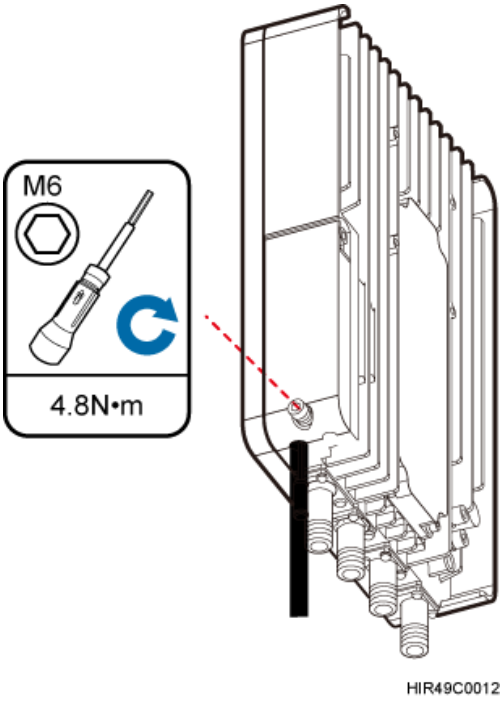

Step 3 Take off the ESD gloves, and pack up all tools.

----End

9.5 Checking the pRRU Hardware Installation

pRRU hardware installation checking includes hardware and cable installation checking.

Table 9-5 lists the hardware installation checking items.

Table 9-5 Hardware installation checking list

No.	Item
1	The installation position of each device strictly complies with the engineering design and meets clearance requirements. Sufficient space is reserved for equipment maintenance.
2	The pRRU is securely installed.
3	The cover plate is securely installed on the RRU cabling cavity.
4	Waterproof blocks are securely installed in vacant cable troughs of the pRRU cabling cavity, and the cover plate of the cabling cavity is securely installed. In addition, vacant RF ports are covered with dustproof caps and the caps are tightened.
5	Labels are correct, legible, and complete at both ends of each cable, feeder, and jumper.

Copyright © Huawei Technologies Co., Ltd.

Table 9-6 lists the check items of the signal cable connection.

Table 9-6 Checklist for the signal cable connection

No.	Item
1	The connectors of the signal cables must securely connected.
2	The connectors of the signal cables are intact.
3	The signal cables are intact.
4	The cable ties are evenly spaced. The signal cables are bound neatly with cable ties to proper tightness, and arranged at even intervals in the same direction.
5	The extra length of the cable ties is cut and removed. The cut surfaces of the indoor cables are smooth and have no sharp edges.
6	The cable layout facilitates maintenance and expansion.
7	Correct and clear labels are attached to both ends of the signal cables.

Table 9-7 lists the checking items for other cable connections.

Table 9-7 Checklist for other cable connections

No.	Item
1	The connectors of the other cables must securely connected.
2	Labels on the cables are legible and bound based on the engineering requirements. The cables must be bound tightly and neatly. The sheaths of the cables must not be damaged.
3	Positions for routing the cables must meet requirements of the engineering design.
4	There are no connectors or joints on each PGND cable. None of PGND cables can be short-circuited or reversely connected. In addition, these cables are not damaged or broken.
5	PGND cables are separately bound from other cables.
6	The protection grounding of the pRRU and the surge protection grounding of the building share one group of ground conductors.

9.6 Powering on the pRRU

This section describes the power-on check on the pRRU after the pRRU hardware is installed and checked.

Copyright © Huawei Technologies Co., Ltd.

Context

After the RHUB and pRRUs are installed and connected to each other, power on them no matter whether the BBU is installed.

Procedure

Step 1 Power on the pRRU. Wait 3 to 5 minutes, check the status of the 3GPP indicator on the pRRU.

If the 3GPP Indicator...	Because...	Then...
Blinks white at 4 Hz	The pRRU is loading software, configuring data, or it is not running.	Wait until the software is loaded. If the loading is not completed in five minutes, power off the pRRU and check whether the data configuration file is correct. After the fault is rectified, power on the pRRU again.
Blinks white at 0.5 Hz (on for 1s and off for 1s)	The pRRU is working properly and does not transmit power.	Check whether the services have been configured and power amplification have been enabled on the pRRU.
Is steady white	The cell is set up and transmits power properly.	No further action is required.
Is steady orange.	There is power input, but the hardware is faulty.	Power off the pRRU, rectify the hardware fault, and then power it on again.
Blinks orange at 0.5 Hz (on for 1s and off for 1s)	A minor alarm (indicating an HDLC link disconnection, for example) is generated.	Troubleshoot based on the alarm information.
Is off	The board is not powered on.	Turn off the power supply switch and check whether the power input is normal. If the power input is normal, check for and rectify board faults, and turn on the power supply switch again.

NOTE

Check the indicator status 30 minutes after the power-on if a pRRU is not connected to any BBU. The pRRU is considered normally powered on when any indicator on the pRRU is on.

----End

Copyright © Huawei Technologies Co., Ltd.

10 (Optional) Installing the Extender-PoE90

This section describes the Extender-PoE90 installation process.

Context

When an RHUB and a pRRU need extended install, use Extender-PoE90. With the Extender-PoE90, the distance of the pRRU and RHUB can be extended by the Extender-PoE90 up to a total distance of 200 m.

The Extender-PoE90 can be installed on a wall or ceiling in the same mode. This section describes wall-mounted installation as an example.

Only space above and under the Extender-PoE90 is required to be reserved when installing the Extender-PoE90. The recommended space for installing the Extender-PoE90 is described as follows:

- At least 150 mm above the Extender-PoE90 is reserved for cabling.
- At least 150 mm under the Extender-PoE90 is reserved for cabling.

Procedure

- Indoor scenario:
  a. Use a marker to mark the two anchor points according to inter-hole spacing, as shown in Figure 10-1.

Copyright © Huawei Technologies Co., Ltd.

Figure 10-1 Marking anchor points

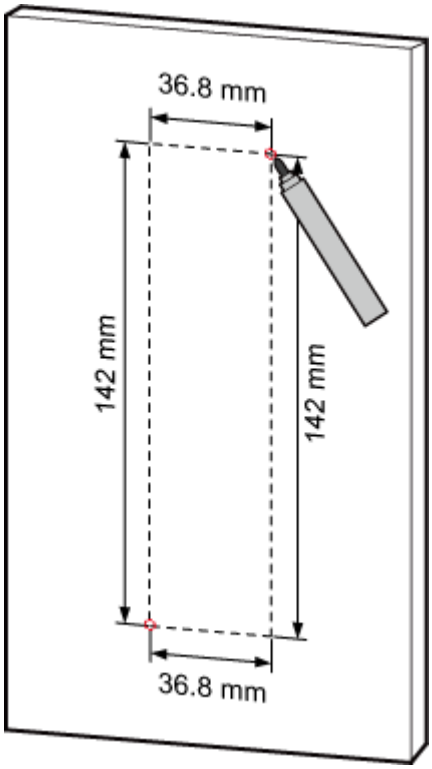

b. Drill holes at the anchor points, and install expansion bolt assemblies, as shown in Figure 10-2. The diameter of the hole is 6 mm, and the depth is 25 mm to 30 mm.

Figure 10-2 Drilling holes and installing expansion bolts

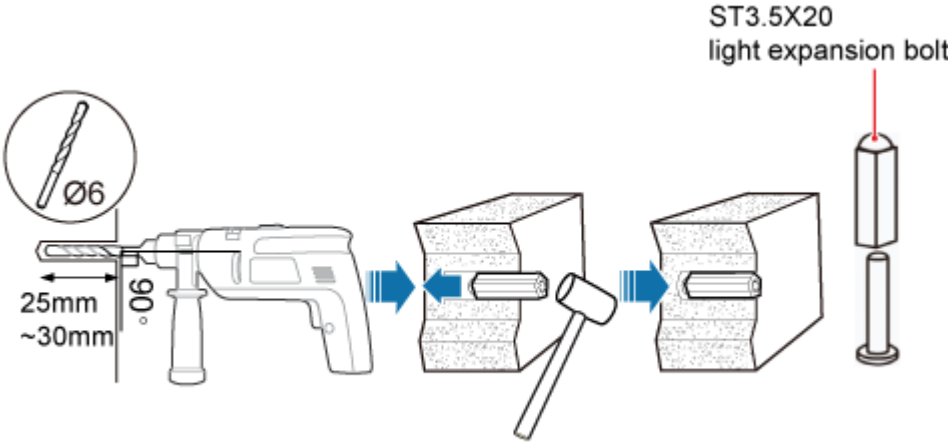

c. Place the Extender-PoE90 in the corresponding position and use an M4 Phillips screwdriver to tighten the screws to 1.4 N•m, as shown in Figure 10-3.

Copyright © Huawei Technologies Co., Ltd.

Figure 10-3 Installing Extender-PoE90

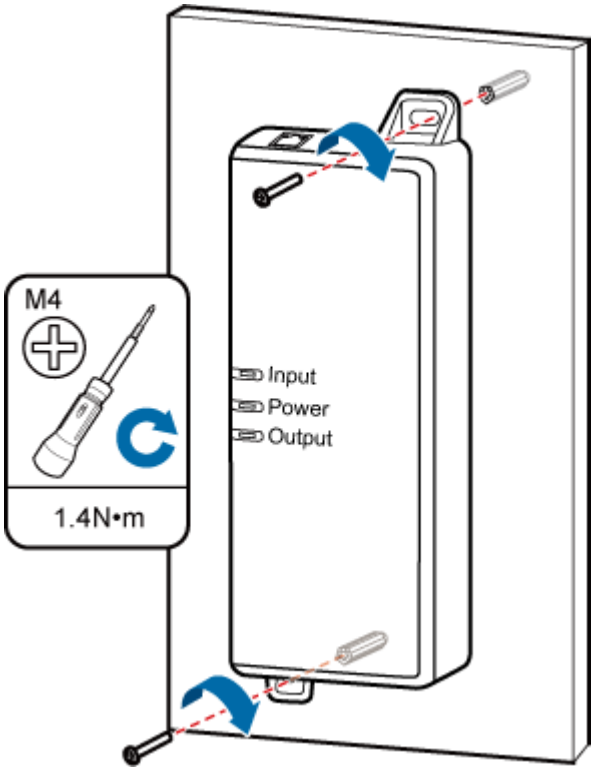

d. Installing the Ethernet cables at the two ends of Extender-PoE90, as shown in Figure 10-4.

Figure 10-4 Installing the Ethernet cables (1)

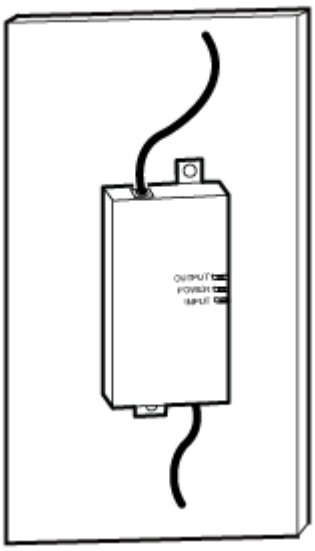

- Outdoor:

Copyright © Huawei Technologies Co., Ltd.

a. Installing the Ethernet cables at the two ends of Extender-PoE90, as shown in Figure 10-5.

Figure 10-5 Installing the Ethernet cables (2)

b. Install the Extender-PoE90 to the cabinet, and keep the OUTPUT interface on top, as shown in Figure 10-6.

Figure 10-6 Installing the Extender-PoE90 to the cabinet

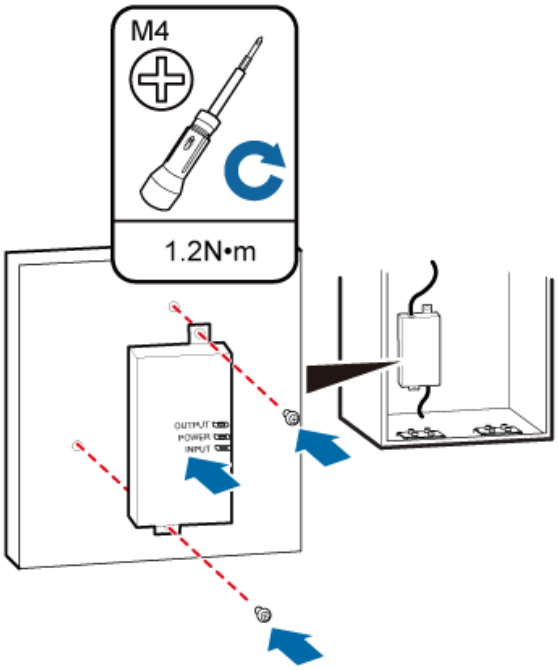

----End

Copyright © Huawei Technologies Co., Ltd.

11 (Optional) Installing the EXD3902 and Cables

About This Chapter

This chapter describes how to install an EXD3902 and its cables. EXD3902 is applied in outdoor scenarios.

11.1 Installation Scenario

The EXD3902 can be installed on a pole or wall. Installation scenarios must meet heat-dissipation and waterproofing requirements of the EXD3902.

11.2 Installation Clearance and Space Requirements

This section describes the recommended and minimum clearances for an EXD3902.

11.3 Installation Process

This section describes the EXD3902 installation process, which involves installing an EXD3902 and cables, checking the EXD3902 hardware installation, and powering on the EXD3902.

11.4 Installing an EXD3902

This section describes the EXD3902 installation process. The EXD3902 can be mounted on a pole or wall depending on the surrounding environment.

11.5 Installing EXD3902 Cables

This section describes the procedure for installing EXD3902 cables.

11.6 Checking the EXD3902 Hardware Installation

EXD3902 hardware installation checking includes hardware and cable installation checking.

11.7 Powering on the EXD3902

This section describes the power-on check on the EXD3902 after the EXD3902 hardware is installed and checked.

Copyright © Huawei Technologies Co., Ltd.

11.1 Installation Scenario

The EXD3902 can be installed on a pole or wall. Installation scenarios must meet heat-dissipation and waterproofing requirements of the EXD3902.

Constraints and Limitations

Application scenarios:

To ensure proper heat dissipation of the EXD3902, the following requirements must be met:

- The EXD3902 cannot be installed in an enclosed cabinet without a cooling system.
- The EXD3902 cannot be installed in an enclosed camouflage box.
- The EXD3902 cannot be installed in an enclosed equipment room without a cooling system.
- When multiple EXD3902s are installed in centralized mode, the minimum clearance requirements must be met. For details, see 11.2 Installation Clearance and Space Requirements.

NOTICE

If the EXD3902 is inappropriately installed, as shown in Figure 11-1, heat dissipation of the EXD3902 deteriorates and the EXD3902 may not work properly.

Figure 11-1 Inappropriately installed EXD3902

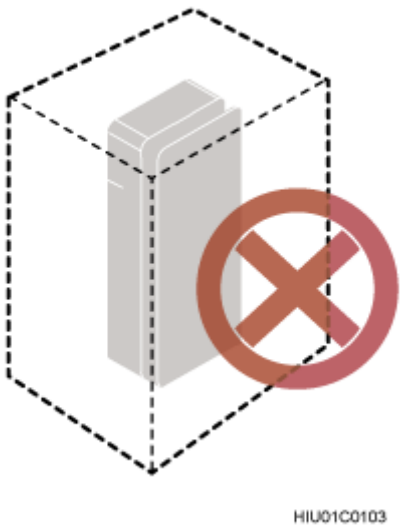

Correct installation methods:

To ensure heat dissipation of the EXD3902 and waterproofing of the ports at the bottom of the EXD3902, the vertical deviation angle of an EXD3902 must be less than or equal to 10°, as shown in Figure 11-2.

Copyright © Huawei Technologies Co., Ltd.

Figure 11-2 Requirements for the vertical deviation angle of an EXD3902

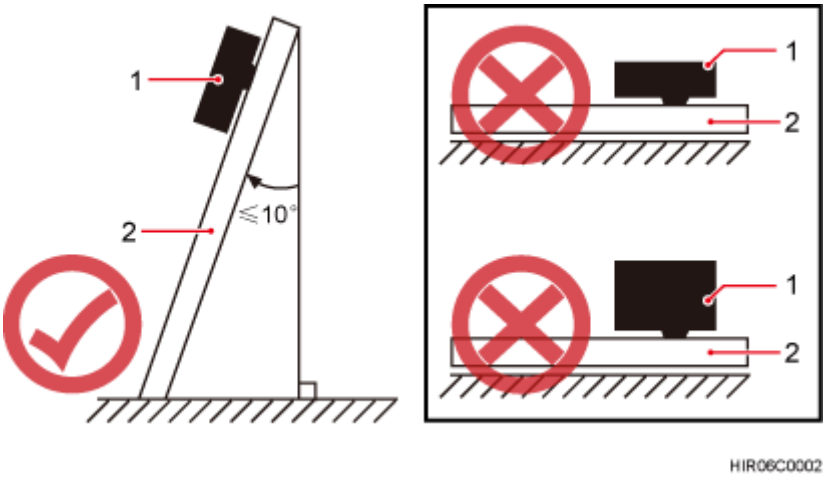

(1) EXD3902 (2) Installation support (pole or wall)

Pole-mounted Scenario

Figure 11-3 shows the recommended pole diameters in different installation scenarios.

Figure 11-3 Diameter of a pole

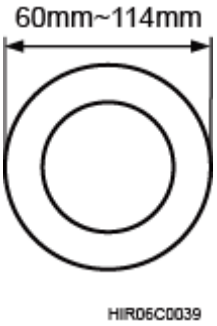

NOTICE

- The diameter of the pole ranges from 60 mm to 114 mm (80 mm recommended).
- The pole thickness must be greater than or equal to 3.5 mm.

Figure 11-4 shows an EXD3902 installed on a pole.

Copyright © Huawei Technologies Co., Ltd.

Figure 11-4 EXD3902 installed on a pole

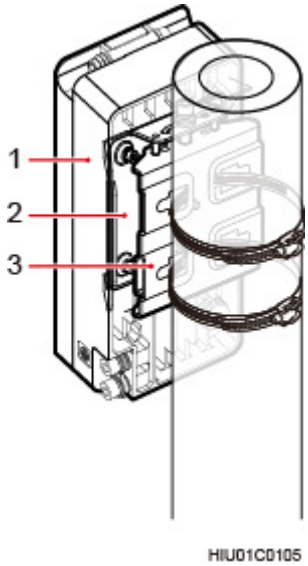

(1) EXD3902 (2) Attachment plate (3) Mounting kit

Wall-mounted Scenario

The wall for installing EXD3902s must meet the following requirements:

- The wall must be able to bear a weight four times heavier than the EXD3902's weight.
- Expansion bolts must be tightened to 30 N·m to ensure that the bolt assemblies work properly and the wall remains intact.

Figure 11-5 shows an EXD3902 installed on a wall.

Figure 11-5 EXD3902 installed on a wall

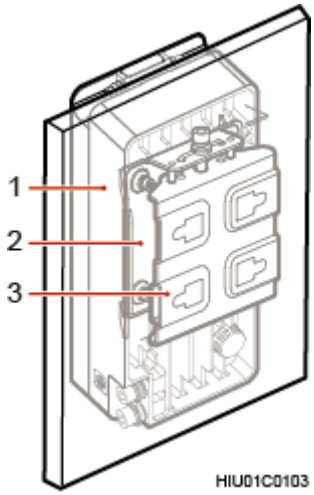

(1) EXD3902 (2) Attachment plate (3) Mounting kit

Copyright © Huawei Technologies Co., Ltd.

11.2 Installation Clearance and Space Requirements

This section describes the recommended and minimum clearances for an EXD3902.

NOTE

- The recommended clearances are for customers, ensuring normal running and providing appropriate space for O&M. If installation space is sufficient, leave the recommended clearances after installing equipment.
- The minimum clearance ensures normal operation and heat dissipation, but O&M activities such as checking indicator status and opening the cover plate of a cabling cavity cannot be properly conducted. If installation space is sufficient, leave the minimum clearance after installing equipment.

Clearance for an EXD3902

Figure 11-6 shows the clearances for installing an EXD3902.

Copyright © Huawei Technologies Co., Ltd.

Figure 11-6 Clearances for installing an EXD3902

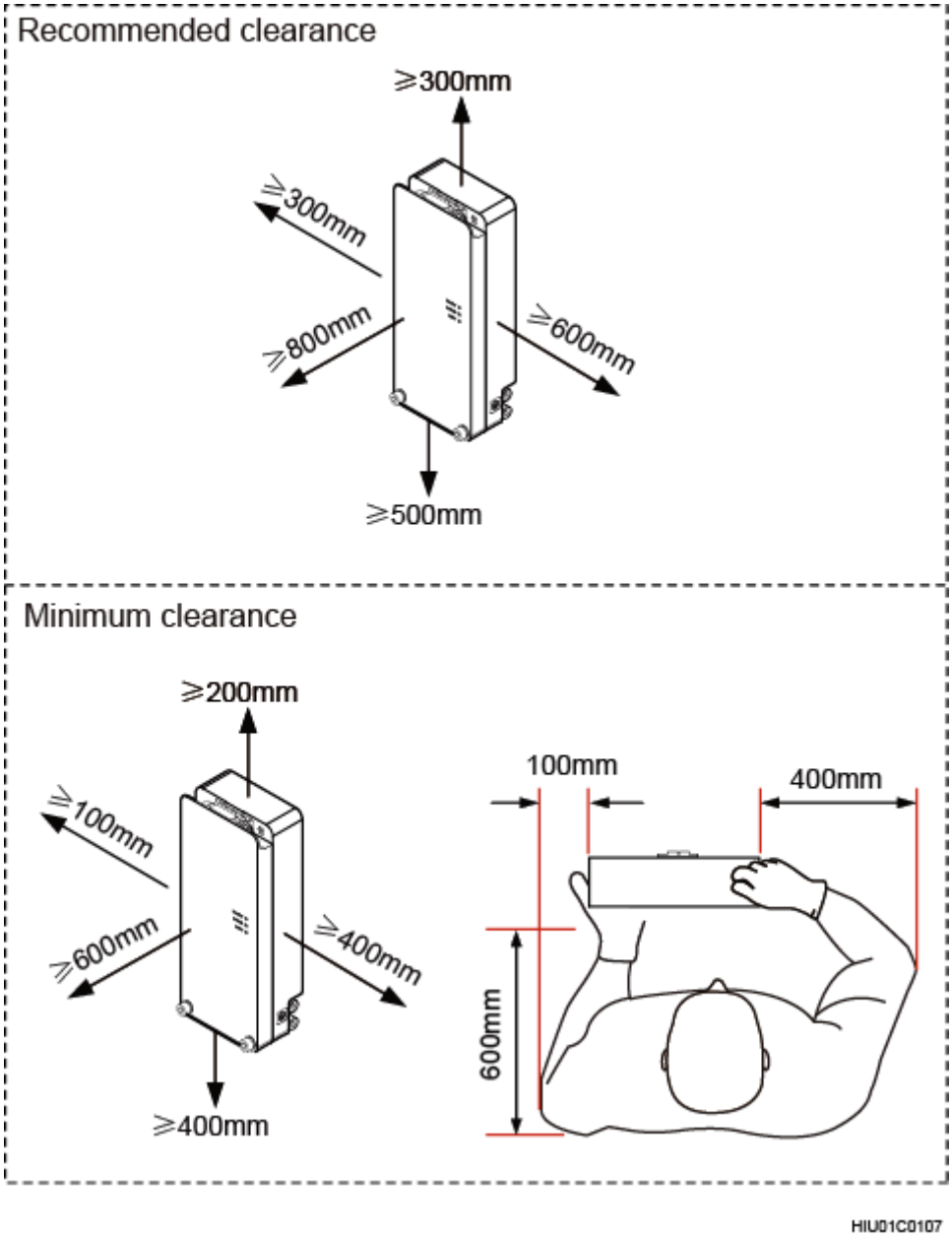

Installation Spacing Between EXD3902s

Installation spacing between EXD3902s includes horizontal and vertical spacing.

Figure 11-7 shows the horizontal spacing between EXD3902s.

Copyright © Huawei Technologies Co., Ltd.

Figure 11-7 Horizontal spacing

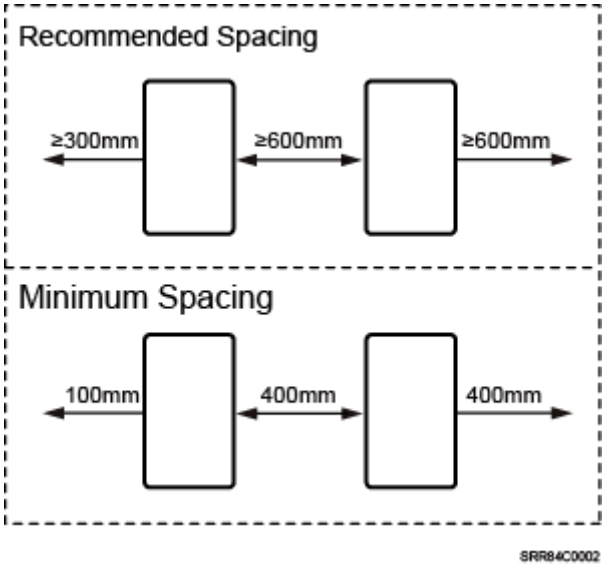

Figure 11-8 shows the vertical spacing between EXD3902s.

Figure 11-8 Vertical spacing

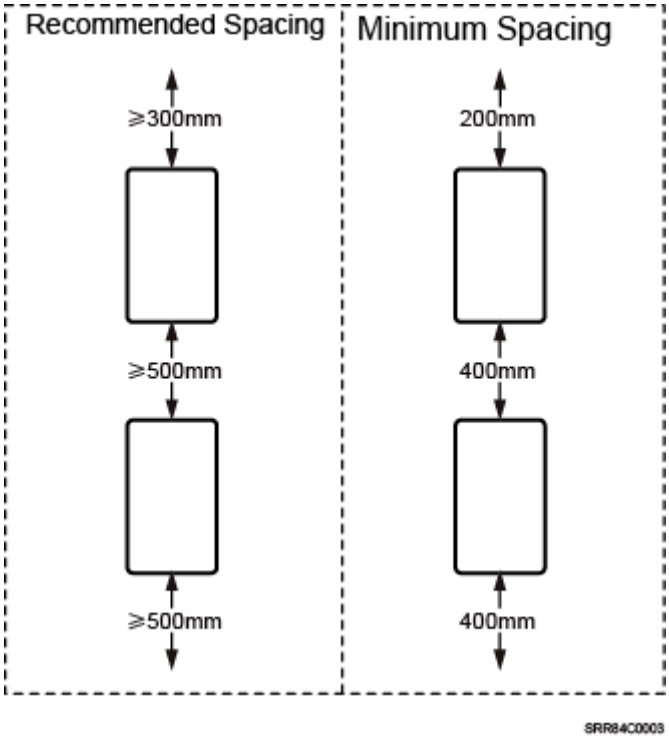

Copyright © Huawei Technologies Co., Ltd.

11.3 Installation Process

This section describes the EXD3902 installation process, which involves installing an EXD3902 and cables, checking the EXD3902 hardware installation, and powering on the EXD3902.

Figure 11-9 shows the EXD3902 installation process.

Figure 11-9 EXD3902 installation process

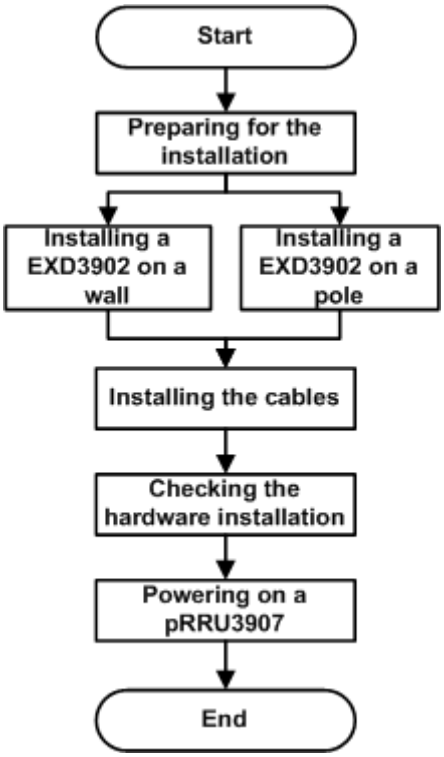

11.4 Installing an EXD3902

This section describes the EXD3902 installation process. The EXD3902 can be mounted on a pole or wall depending on the surrounding environment.

11.4.1 EXD3902 Mounting Kits

This section describes mounting kits and attachment plates for installing EXD3902s.

Figure 11-10 shows the exterior of an EXD3902.

Copyright © Huawei Technologies Co., Ltd.

Figure 11-10 Front and side of an EXD3902

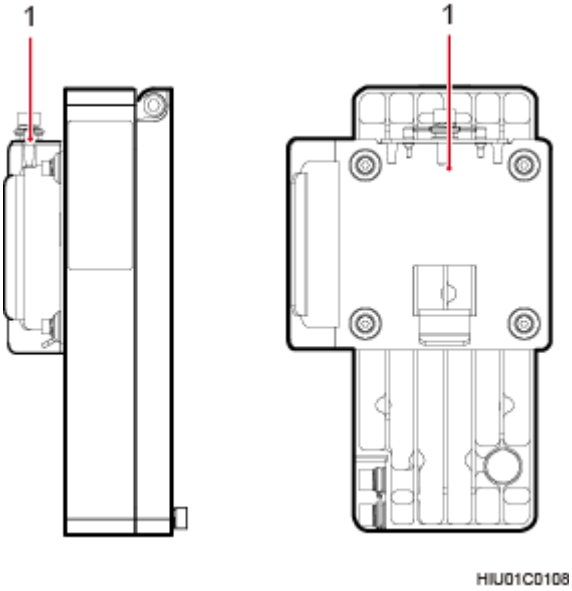

(1) Attachment plate

Figure 11-11 shows the mounting kits for installing an EXD3902.

Figure 11-11 Mounting kits for installing an EXD3902

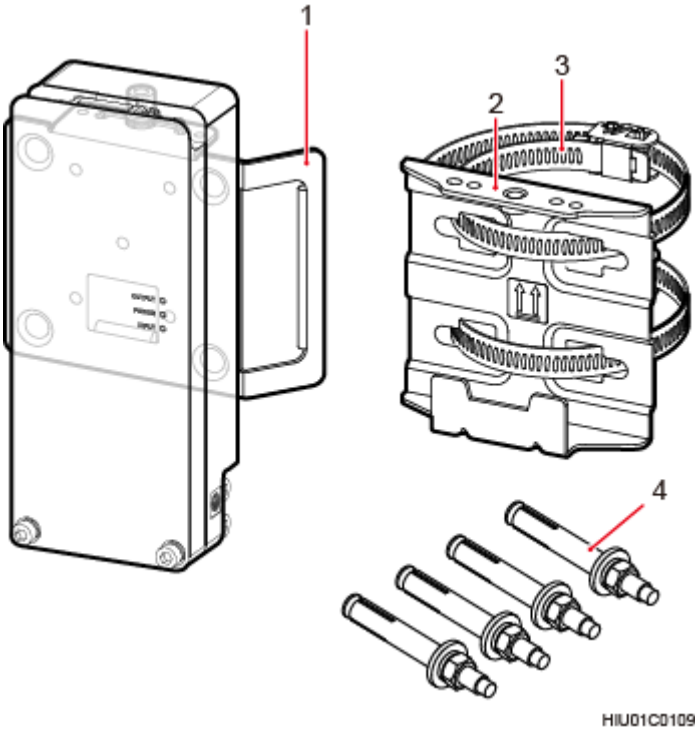

(1) Attachment plate (2) Mounting bracket (3) Hose clamp (4) Expansion bolt

Copyright © Huawei Technologies Co., Ltd.

11.4.2 Installing an EXD3902 on a Wall

This section describes the procedure and precautions for installing an EXD3902 on a wall.

Context

NOTICE

Place a foam pad or cardboard under an EXD3902 to protect the EXD3902 housing from damage during the installation.

The wall for installing EXD3902s must meet the following requirements:

- The wall must be able to bear a weight four times heavier than the EXD3902's weight.
- Expansion bolts must be tightened to 30 N·m to ensure that the bolt assemblies work properly and the wall remains intact.

Procedure

Step 1 Determine a position for installing the EXD3902 on a wall, use a level to verify that the marking-off template is placed horizontally, and then use a marker to mark anchor points, as shown in Figure 11-12.

Figure 11-12 Marking anchor points

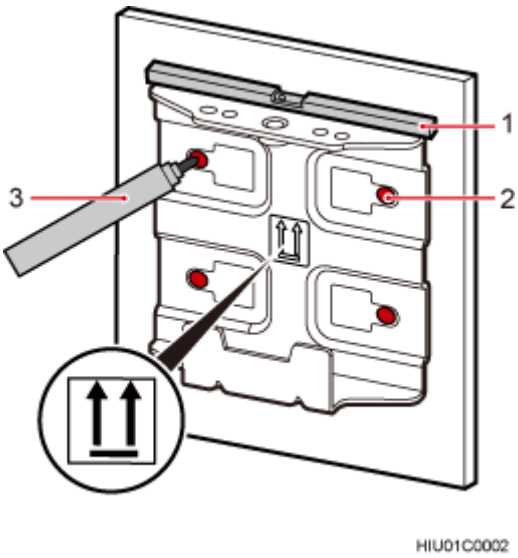

(1) Level (2) Tapped hole (3) Marker

NOTE

It is recommended that the separate mounting kit be 1200 mm to 1600 mm above the ground

Step 2 Drill holes at the anchor points and install expansion bolts in the holes, as shown in Figure 11-13.

Copyright © Huawei Technologies Co., Ltd.

Figure 11-13 Drilling a hole and inserting an expansion bolt assembly

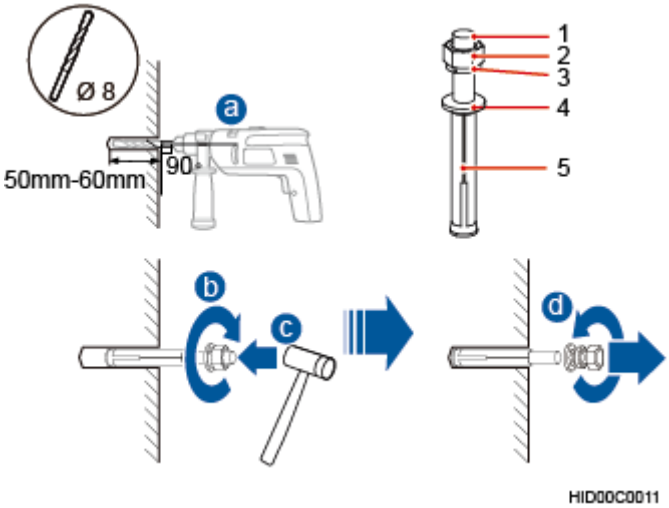

(1) M6x60 bolt (2) Nut (3) Spring washer (4) Flat washer (5) Expansion tube

1. Use a hammer drill with a φ8 bit to drill holes vertically at the marked anchor points. Ensure that the depth of each hole ranges from 45 mm to 50 mm.

NOTICE

Take proper safety measures to protect your eyes and respiratory tract against the dust before drilling holes.

2. Use a vacuum cleaner to clear the dust out from inside and around the holes, and measure the distances between holes. If any of the hole is beyond the acceptable range, mark a new anchor point and drill a new hole.
3. Tighten the expansion bolts slightly, and place each expansion bolt vertically into each hole.
4. Use a rubber mallet to pound each expansion bolt until the corresponding expansion tube completely enters the hole. Leave 20 mm of the expansion bolt outside the wall.
5. Remove the M6×60 bolt, nut, spring washer, and flat washer in sequence.

Step 3 Place the mounting kit onto the wall, insert four M6x60 bolts into the tapped holes on the mounting kit, and tighten each bolt to 5 N·m (44.25 lbf·in.) to secure the mounting kit, as shown in Figure 11-14.

Copyright © Huawei Technologies Co., Ltd.

Figure 11-14 Securing the separate mounting kit

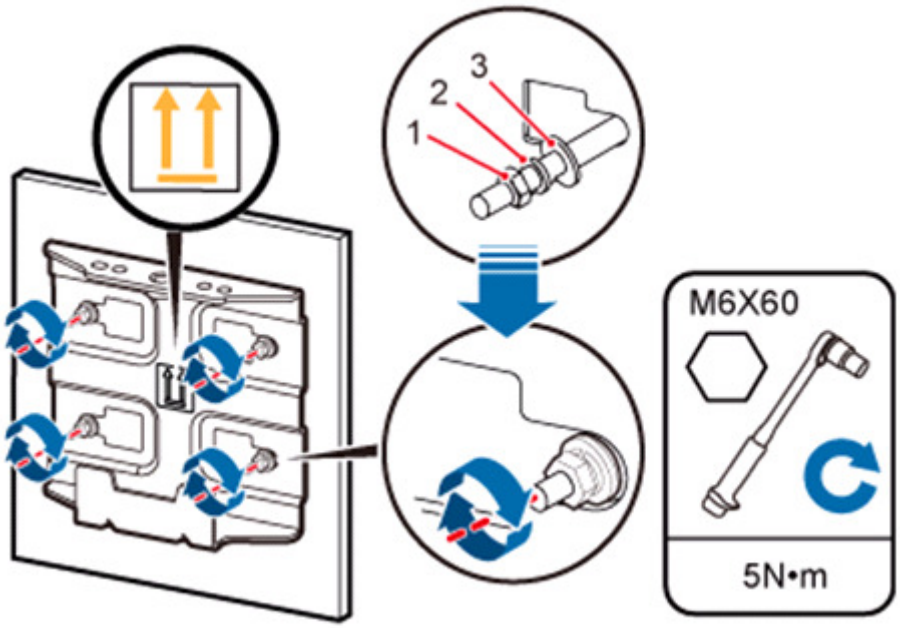

(1) Nut (2) Spring washer (3) Flat washer

Step 4 Secure the EXD3902 onto the mounting kit, as shown in Figure 11-15.

Figure 11-15 Securing the EXD3902 onto the mounting kit

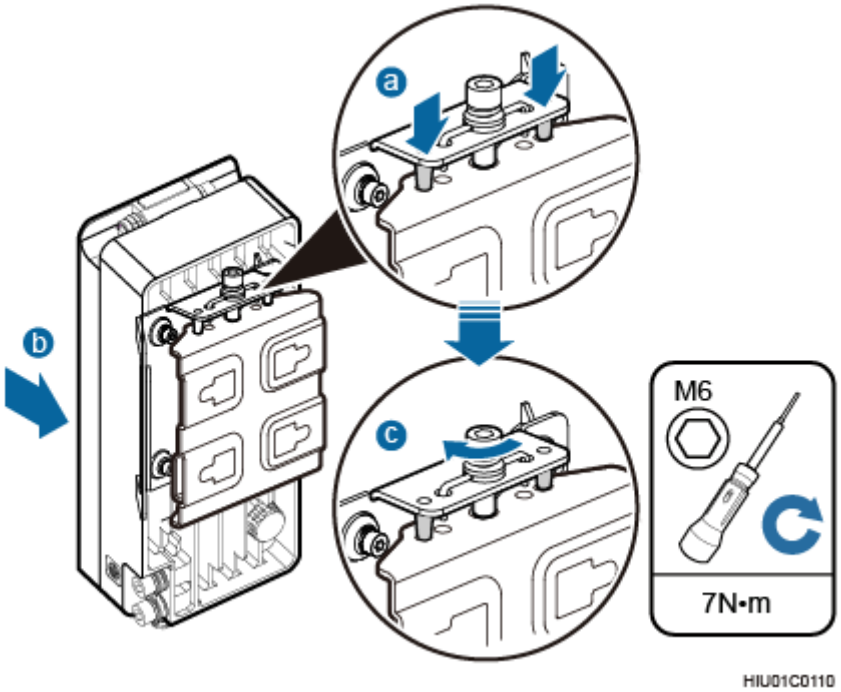

Copyright © Huawei Technologies Co., Ltd.

1. Hold the EXD3902, hang the two dowels on the top of the EXD3902 attachment plate onto the separate mounting kit, and push the EXD3902 until it snaps into place, as shown by illustrations a and b in Figure 11-15.
2. Use the M6 inner hexagon screwdriver to tighten the screw on the top of the separate attachment plate to 7 N·m, as shown by illustration c in Figure 11-15.

----End

11.4.3 Installing an EXD3902 on a Pole

This section describes the procedure and precautions for installing an EXD3902 on a pole.

Context

NOTICE

Place a foam pad or cardboard under an EXD3902 to protect the EXD3902 housing from damage during the installation.

Procedure

Step 1 Determine a position for installing the separate mounting kit, as shown in Figure 11-16.

Figure 11-16 Distance between the separate mounting kit and the ground

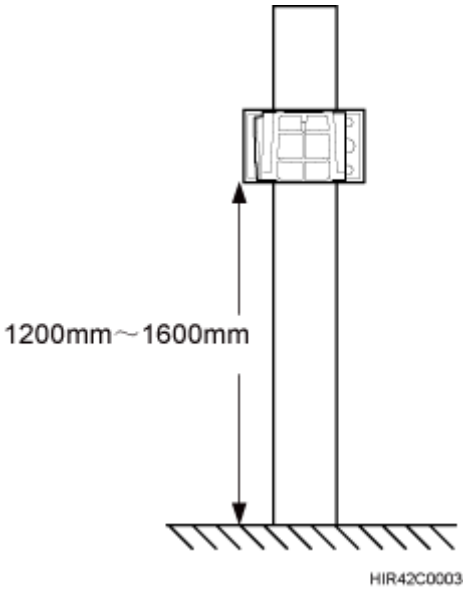

NOTE

It is recommended that the separate mounting kit be 1200 mm (47.24 in.) to 1600 mm (62.99 in.) above the ground.

Step 2 Install the EXD3902 mounting kit, as shown in Figure 11-17.

Copyright © Huawei Technologies Co., Ltd.

Figure 11-17 Installing the EXD3902 mounting kit

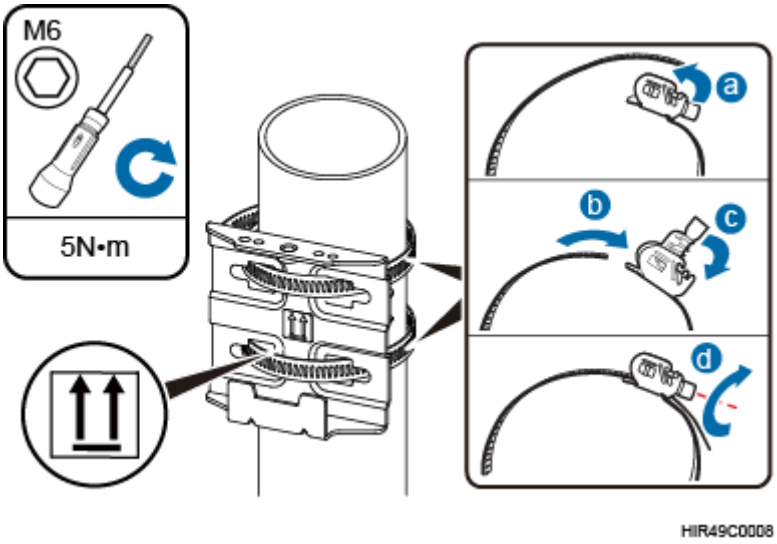

1. Determine a position for installing the EXD3902. Then, place the separate mounting kit onto the pole, thread the hose clamp through the mounting kit, and encircle the pole with the hose clamp, as shown by illustrations a, b, and c in Figure 11-17.
2. Use an M6 inner hexagon screwdriver to tighten the bolt on each hose clamp to 5 N·m to secure the mounting kit, as shown by illustration d in Figure 11-17.

Step 3 Secure the EXD3902 onto the mounting kit, as shown in Figure 11-18.

Figure 11-18 Securing the EXD3902 onto the mounting kit

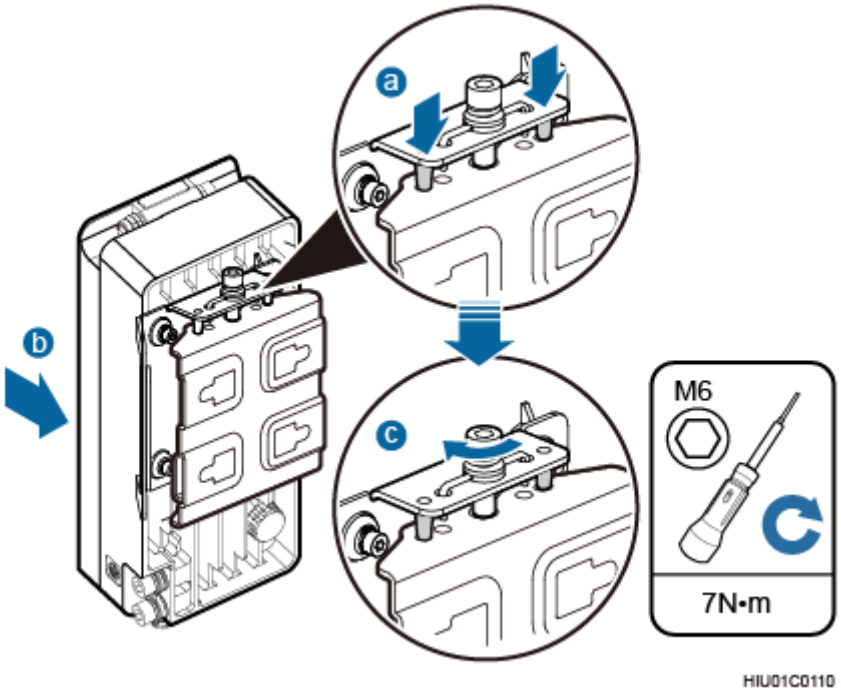

Copyright © Huawei Technologies Co., Ltd.

1. Hold the EXD3902, hang the two dowels on the top of the EXD3902 attachment plate onto the separate mounting kit, and push the EXD3902 until it snaps into place, as shown by illustrations a and b in Figure 11-18.
2. Use the M6 inner hexagon screwdriver to tighten the screw on the top of the separate attachment plate to 7 N·m, as shown by illustration c in Figure 11-18.

----End

11.5 Installing EXD3902 Cables

This section describes the procedure for installing EXD3902 cables.

11.5.1 Cabling Requirements

Cables must be laid out according to the specified cabling requirements to prevent signal interference.

NOTE

If a cable listed below is not required, skip the cabling requirements of the cable.

General Cabling Requirements

Bending radius requirements

- The bending radius of a 7/8" feeder must be greater than 250 mm (9.84 in.), and the bending radius of a 5/4" feeder must be greater than 380 mm (14.96 in.).
- The bending radius of a 1/4" jumper must be greater than 35 mm (1.38 in.). The bending radius of a super-flexible 1/2" jumper must be greater than 50 mm (1.97 in.), and the bending radius of an ordinary 1/2" jumper must be greater than 127 mm (5.00 in.).
- The bending radius of a PGND cable must be at least three times its diameter.
- The bending radius of a signal cable must be at least five times its diameter.

Cable binding requirements

- Cables of the same type must be bound together.
- Different types of cables must be separately laid out and bound, with a minimum distance of 30 mm (1.18 in.) from each other.
- Cables must be bound tightly and neatly. The sheaths of cables must not be damaged.
- Cable ties must face the same direction, and those at the same horizontal line must be in a straight line.
- The excess of indoor cable ties must be cut off. The excess of 5 mm (0.197 in.) of outdoor cable ties should be reserved, and the cut surfaces must be smooth without sharp edges.
- After cables are installed, labels or nameplates must be attached to the cables at their ends, curves, and interconnection positions.

Security requirements

- When laying out cables, avoid sharp objects, for example sharp edges on the wall. If necessary, use tubes to protect the cables.
- When laying out cables, keep cables away from heat sources, or use heat insulation materials to insulate the cables from the heat sources.

Copyright © Huawei Technologies Co., Ltd.

- Reserve a proper distance (0.1 m [3.937 in.] is recommended) between equipment and cables especially at the cable curves to protect the cables and equipment.

Indoor cabling requirements

- Route each cable into the room through the feeder window.
- Reserve drip loops for all cables outside the feeder window before routing them into the room. Ensure that the radiuses of the drip loops are greater than or equal to the minimum bending radiuses of the cables.
- When routing a cable into the room, ensure that a person is assisting you in the room.
- Apply waterproof treatment to the feeder window.

Outdoor Cabling Requirements

- Protect outdoor cables against potential damage. For example, thread the cables through tubes.
- Cables to be protected include AC power cables, transmission cables, and cables laid out underground.
- Use cable clips to secure cables outdoors.
- Arrange cables neatly along the routing direction and use cable clips to secure the cables.
- Determine the positions where the clips are installed according to the actual situation. For example, 7/8" feeders are secured with clips at an interval of 1.5 m (4.92 ft) to 2 m (6.56 ft), and CPRI fiber optic cables and power cables are secured with clips at an interval of 1 m (3.28 ft) to 1.5 m (4.92 ft). Ensure that the clips are evenly spaced and in the same direction.
- When fastening cables with a clip, ensure that the cables are aligned neatly and are routed through the holes in the clip. Do not stretch the cables too tightly.
- When using clips to secure cables, tighten the screws on the clips after all cables are arranged and laid out.

Special Cabling Requirements

Cabling of PGND cables

- PGND cables for a base station must be connected to the same ground bar.
- PGND cables must be buried in the ground or routed indoors.
- The external conductor of the coaxial wire and the shield layer of the shielded cable must have proper electrical contact with the metal surface of the equipment which they are connected to.
- PGND cables and signal cables must be installed separately. A certain distance must be reserved between them to prevent interference from each other.
- Switches or fuses must not be installed on the PGND cables.
- Other devices must not be used for electrical connections of the PGND cables.
- All the metal parts in the housing of the equipment must be reliably connected to the ground terminal.

11.5.2 EXD3902 Cable Connections

This section describes EXD3902 cable connections.

Figure 11-19 shows the cable connections when an EXD3902 is installed.

Copyright © Huawei Technologies Co., Ltd.

Figure 11-19 Cable connections when an EXD3902 is installed

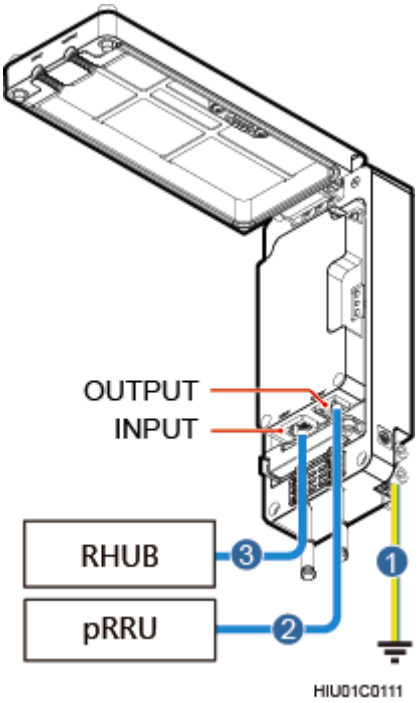

(1) EXD3902 PGND cable (2) pRRU Ethernet cable (3) RHUB Ethernet cable

11.5.3 Installling a PGND cable

This section describes the procedure for installing a PGND cable.

Context

The cross-sectional area of an EXD3902 PGND cable is 16 mm2. The OT terminals at two ends of the cable are M6 and M8 terminals respectively.

Procedure

Step 1 Prepare an EXD3902 PGND cable.

1. Cut the cable to a length suitable for the actual cable route.
2. Add OT terminals to both ends of the cable by following the instructions in Assembling the OT Terminal and the Power Cable.

Step 2 Installling the EXD3902 PGND cable.

Connect one end of the PGND cable with an M6 OT terminal to the ground terminal at the EXD3902 bottom and the other end of the cable with an M8 OT terminal to the external ground bar, as shown in Figure 11-20.

Copyright © Huawei Technologies Co., Ltd.

Figure 11-20 Installling an EXD3902 PGND cable

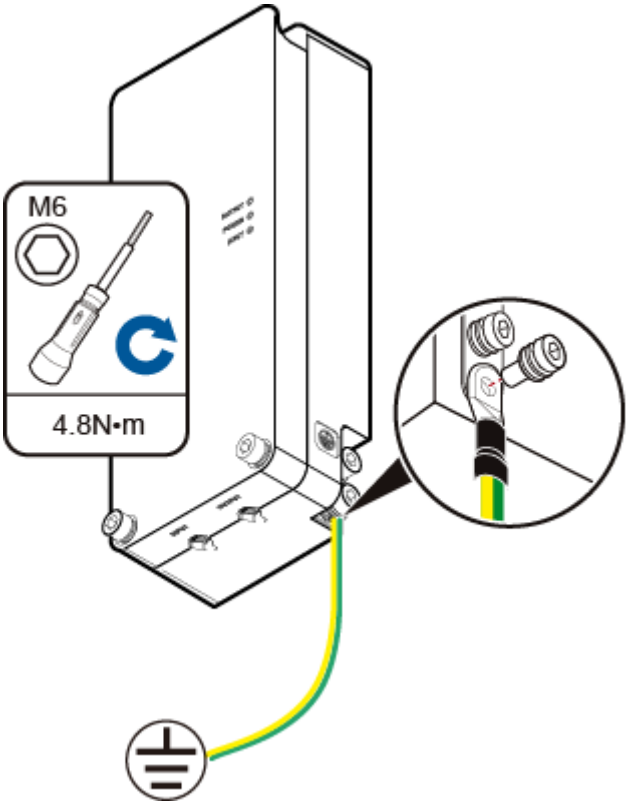

NOTE

Crimp OT terminals in correct directions, as shown in Figure 11-21.

Figure 11-21 Correct direction for crimping an OT terminal

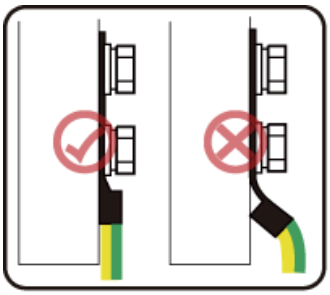

EIR06C6001

----End

Follow-up Procedure

1. Route the cable by following the instructions in section 11.5.1 Cabling Requirements and use cable ties to bind the cable.
2. Label the installed cable. For details, see section 15.5 Attaching a Sign Plate Label.

Copyright © Huawei Technologies Co., Ltd.

11.5.4 Opening the Cover Plate of an EXD3902 Cabling Cavity

This section describes the procedure for opening the cover plate of an EXD3902 cabling cavity.

Procedure

Step 1 Wear ESD gloves.

NOTICE

Take proper ESD protection measures, for example, wear ESD gloves, to prevent electrostatic damage to the boards, modules, or electronic components.

Step 2 Use an M6 inner hexagon screwdriver to loosen the screws on the cover plate of the EXD3902 cabling cavity, and open the cover plate, as shown in Figure 11-22.

Figure 11-22 Opening the cover plate of an EXD3902 cabling cavity

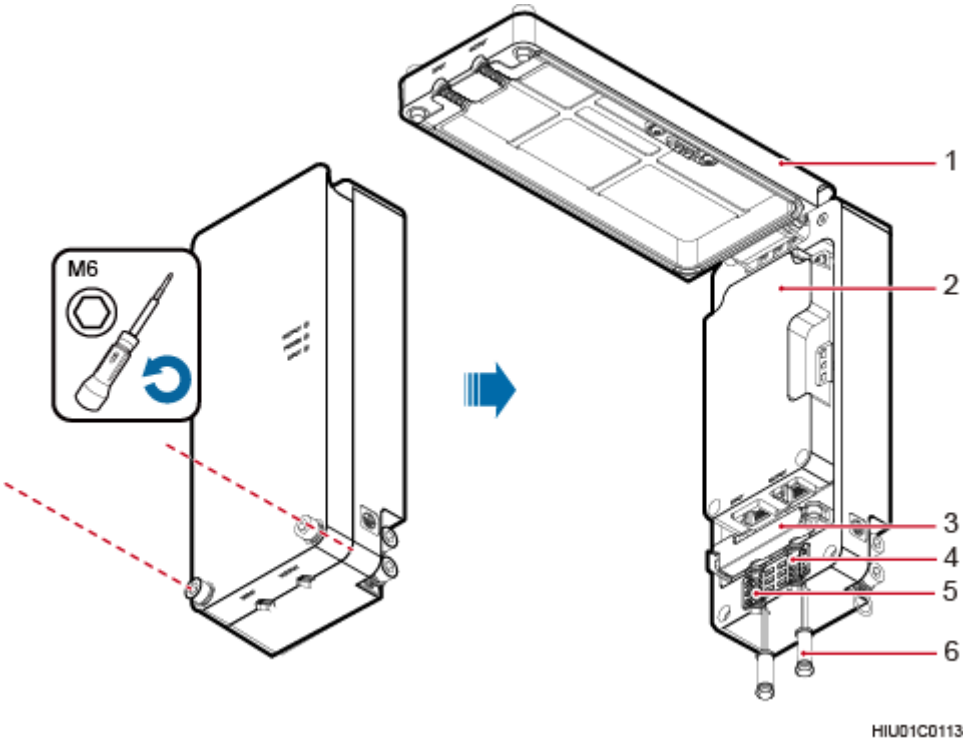

(1) Cover plate	(2) Cabling cavity	(3) Cable clip for Ethernet cables
(4) Cable clip for Ethernet cables	(5) Cable trough for Ethernet cables	(6) Cable trough for Ethernet cables

Step 3 Remove the waterproof block.

Copyright © Huawei Technologies Co., Ltd.

NOTE
Remove only the waterproof blocks for cables to be installed.

----End

11.5.5 Installing an Ethernet Cable

This section describes how to install an Ethernet cable.

Context

- The Ethernet cable must be of Category 5e (enhanced) or higher.
- Ethernet cables are not delivered, and they must be prepared onsite. You need to use a network cable tester to test the Ethernet cable connection.

NOTE
The INPUT port is for connecting to the RHUB, and the OUTPUT port is for connecting to the pRRU.

Procedure

Step 1 Make the Ethernet cables.

1. Assemble an RJ45 connector and an Ethernet cable by following instructions in Assembling the Unshielded RJ45 Connector and the Ethernet Cable, Assembling the Shielded RJ45 Connector and the Ethernet Cable.

NOTE
Follow pin assignment instructions described in section Ethernet Cable in *DBS3900 LampSite Hardware Description* to assemble the RJ45 connector and the Ethernet cable. Otherwise, the transmission signal quality deteriorates and CPRI links may be disconnected.

2. Check whether the made RJ45 connector is qualified by following instructions in Checking the Appearance of Metal Contact Strips.
3. To complete the assembly of the other end, repeat Step 1.1 and Step 1.2.
4. Check whether the touch points on the connectors at both ends are normally conducted and well contacted and whether the connections are correct by following instructions in Testing the Connection of Assembled Cables of *Installation Reference*.

Step 2 Connect the RJ45 connector of the cable connecting the RHUB to the INPUT port on the EXD3902 and the RJ45 connector of the cable connecting the pRRU to the OUTPUT port on the EXD3902. Press the cables into the clips, as shown in Figure 11-23.

Copyright © Huawei Technologies Co., Ltd.

Figure 11-23 Installing Ethernet cables

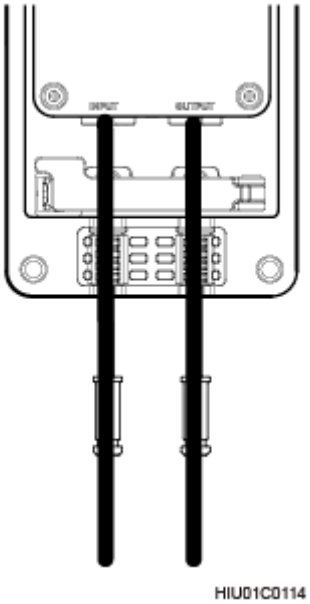

----End

Follow-up Procedure

1. Route the cable by following the instructions in section 11.5.1 Cabling Requirements and use cable ties to bind the cable.
2. Label the installed cable. For details, see section 15.5 Attaching a Sign Plate Label.

11.5.6 Closing the Cover Plate of an EXD3902 Cabling Cavity

This section describes the procedure for closing the cover plate of an EXD3902 cabling cavity.

Procedure

Step 1 Close the cover plate of the EXD3902 cabling cavity. Use an M6 inner hexagon screwdriver to tighten the screws on the cover plate to 4.8 N·m, as shown in Figure 11-24.

Copyright © Huawei Technologies Co., Ltd.

Figure 11-24 Closing the cover plate of an EXD3902 cabling cavity

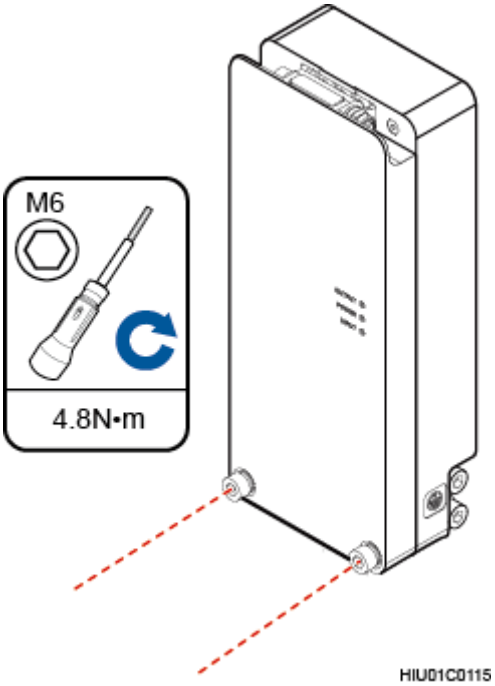

Step 2 Take off the ESD gloves, and pack up all tools.

----End

11.6 Checking the EXD3902 Hardware Installation

EXD3902 hardware installation checking includes hardware and cable installation checking.

Table 11-1 lists the hardware installation checking items.

Table 11-1 Hardware installation checking list

No.	Item
1	The installation position of each device strictly complies with the engineering design and meets clearance requirements. Sufficient space is reserved for equipment maintenance.
2	The EXD3902 is securely installed.
3	The cover plate is securely installed on the EXD3902 cabling cavity.
4	Waterproof blocks are securely installed in vacant cable troughs of the EXD3902 cabling cavity, and the cover plate for the cabling cavity is securely installed. In addition, vacant RF ports are covered with dustproof caps.
5	Labels are correct, legible, and complete at both ends of each cable, feeder, and jumper.

Copyright © Huawei Technologies Co., Ltd.

Table 11-2 lists the check items of the signal cable connection.

Table 11-2 Checklist for the signal cable connection

No.	Item
1	The signal cable connectors are securely connected.
2	The signal cable connectors are intact.
3	The signal cables are intact.
4	The signal cables are bound neatly with cable ties to proper tightness, and arranged at even intervals in the same direction.
5	The excess of cable ties is trimmed off without remaining rough edges.
6	The signal cable layout facilitates future maintenance and capacity expansion.
7	Labels at two ends of the signal cables are correct and legible.

Table 11-3 lists the checking items for other cable connections.

Table 11-3 Checklist for other cable connections

No.	Item
1	The connectors of the other cables are securely connected.
2	All labels on the cables are legible and are bound according to the engineering requirements. The cables are bound tightly and neatly. The sheaths of the cables are intact.
3	The cable layout complies with the engineering design.
4	There are no connectors or joints on each PGND cable. None of PGND cables can be short-circuited or reversely connected. In addition, these cables are not damaged or broken.
5	PGND cables are separately bound from other cables.
6	The protection grounding of the EXD3902 and the surge protection grounding of the building share one group of ground conductors.

11.7 Powering on the EXD3902

This section describes the power-on check on the EXD3902 after the EXD3902 hardware is installed and checked.

Context

Copyright © Huawei Technologies Co., Ltd.

NOTICE

An EXD3902 must be powered on within 24 hours after it is unpacked. If the EXD3902 is powered off for maintenance, you must restore its power within 24 hours.

Figure 11-25 shows the EXD3902 power-on check procedure.

Figure 11-25 EXD3902 power-on check procedure

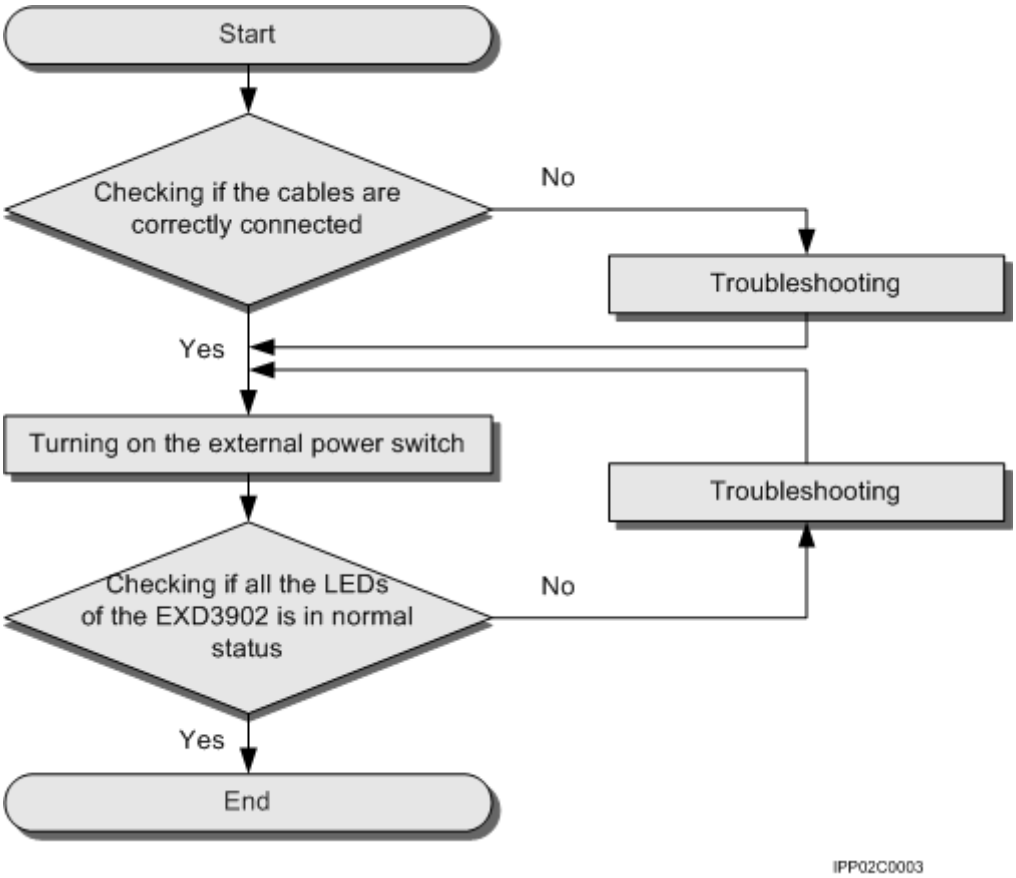

Procedure

Step 1 Check that the cables are correctly connected.

Step 2 Check the EXD3902 indicator status three to five minutes after it is powered on. The EXD3902 is working normally if the OUTPUT and INPUT indicators blink green and the POWER indicator is steady orange.

----End

Copyright © Huawei Technologies Co., Ltd.

12 (Optional) Installing the PoE Surge Protector and Cables

This section describes how to install a PoE surge protector and its cables in the cabinet. When the RHUB, pRRU, and extender are installed outdoors, a PoE surge protector is required to provide surge protection for the PoE power supply port.

Procedure

Step 1 Connect a PGND cable to the PE ground terminal and an Ethernet cable (about 0.4 m long) to the Protect port. See Figure 12-1.

Figure 12-1 Installing the PGND Cable and Ethernet Cable (1)

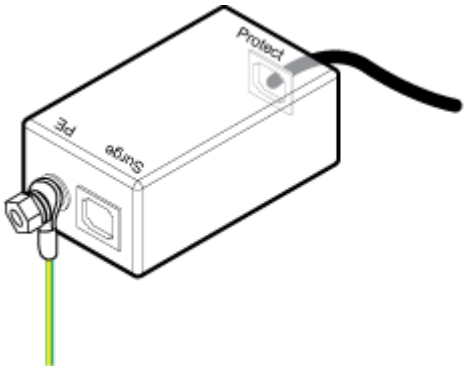

Step 2 Install the PoE surge protector in the cabinet. See Figure 12-2.

NOTE
The Surge port must be installed toward the outside.

Copyright © Huawei Technologies Co., Ltd.

Figure 12-2 Installing the PoE surge protector

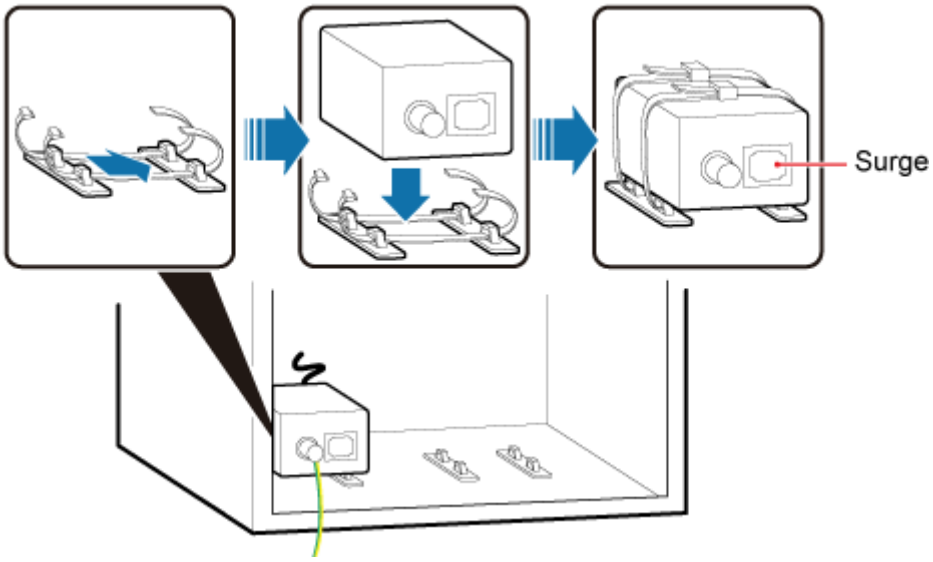

Step 3 Connect an Ethernet cable to the Surge port, and the other end of the PGND cable to the ground terminal on the cabinet. See Figure 12-3.

NOTE

During the installation, bind the Ethernet cables to the side cable bridge on the cabinet.

Figure 12-3 Installing the PGND Cable and Ethernet Cable (2)

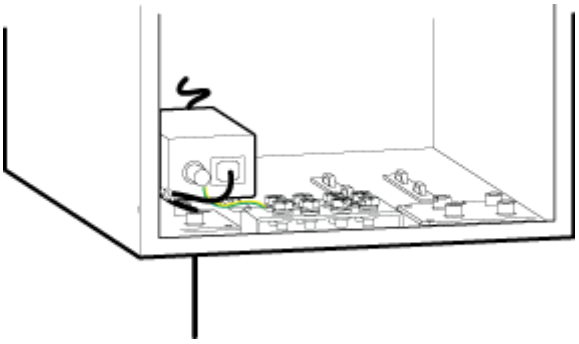

----End

Copyright © Huawei Technologies Co., Ltd.

13 (Optional) Installing the RF Surge Protector and Cables

This section describes how to install an RF surge protector and its cables in the cabinet. When the pRRU is installed outdoors, an RF surge protector is required to provide surge protection for the RF port.

Procedure

Step 1 Install the PGND cable and the RF jumper connected to the Protect port. See Figure 13-1.

Figure 13-1 Installing the PGND Cable and RF Jumper (1)

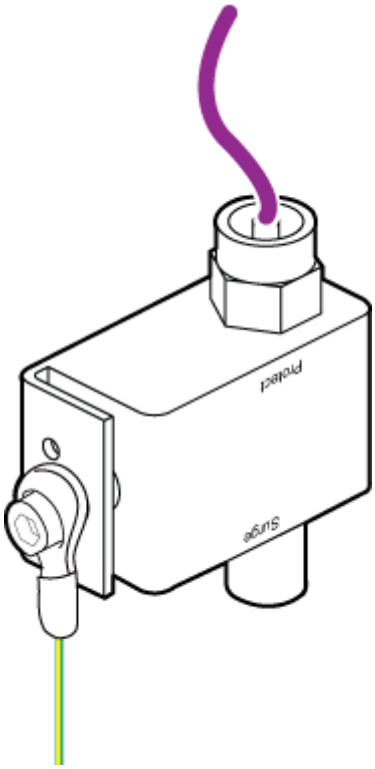

Step 2 Install the RF surge protector in the cabinet. See Figure 13-2.

Copyright © Huawei Technologies Co., Ltd.

Figure 13-2 Installing the RF surge protector

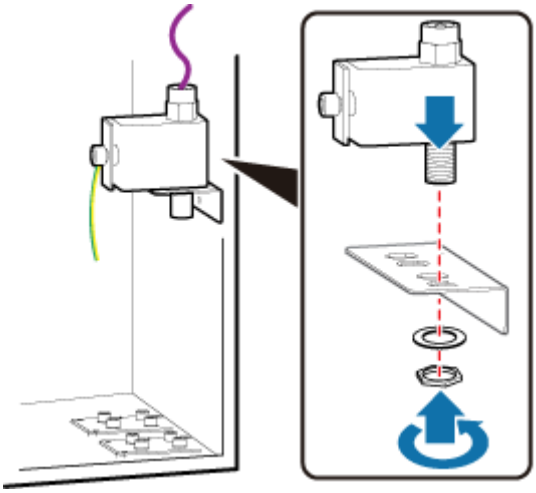

NOTE

Alternatively, you can remove the fastener on the cabinet, install the RF surge protector and its cables on the fastener, and then install the combination onto the cabinet.

Step 3 Connect an RF jumper to the Surge port, and the other end of the PGND cable to the ground terminal on the cabinet. See Figure 13-3.

Figure 13-3 Installing the PGND Cable and RF Jumper (2)

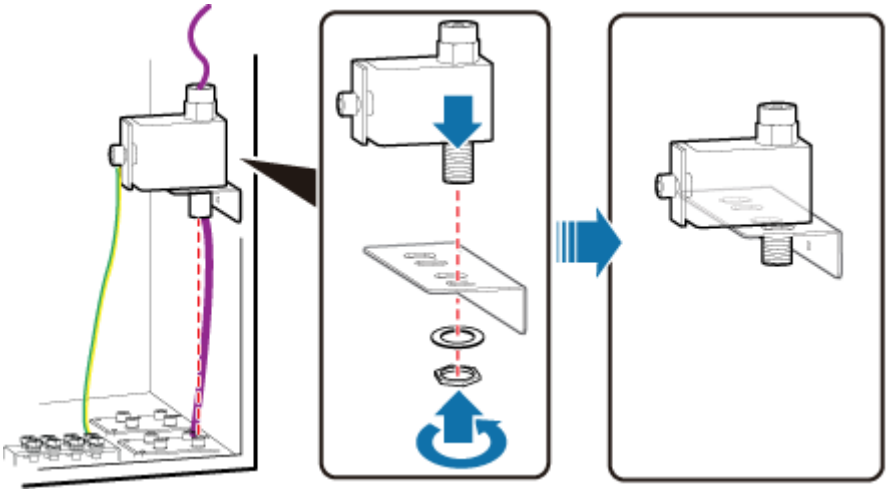

NOTE

- The cable hole on the cabinet for the RF jumper must be vertical to the Surge port.
- Before routing all cables through the cable outlet modules at the bottom of the cabinet, wrap the naked RF jumper by using PVC insulation tape and then apply petroleum jelly.

----End

Copyright © Huawei Technologies Co., Ltd.

14 (Optional) Installing the Cabinet and Cabinet Cables

About This Chapter

This section describes the procedure and precautions for installing a cabinet and cables connected to it. The cabinet can be installed on the wall, pole, channel steel, angle steel, steel mesh, or ground by using mounting kits. Vertical and horizontal installation modes are supported when the cabinet is installed on the steel mesh.

14.1 Installation Clearance Requirements

This section describes the recommended and minimum clearances for a cabinet.

14.2 Mounting Bracket and Attachment Plate

This section describes mounting brackets and attachment plates for installing a cabinet.

14.3 Installing a Cabinet

This section describes the procedure and precautions for installing a cabinet.

14.4 Installing Cabinet Cables

This chapter describes the procedure for installing cabinet cables.

14.1 Installation Clearance Requirements

This section describes the recommended and minimum clearances for a cabinet.

When installing a cabinet, the following clearance requirements should be met.

Figure 14-1 show the recommended clearances for installing a cabinet.

Copyright © Huawei Technologies Co., Ltd.

Figure 14-1 Clearances for installing a cabinet

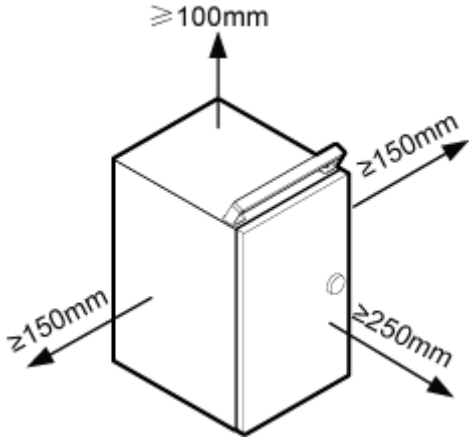

The recommended clearance for installing a cabinet is described as follows:

- At least 100 mm above the cabinet is reserved for maintenance.
- At least 150 mm on the left of the cabinet is reserved for maintenance.
- At least 150 mm on the right of the cabinet is reserved for maintenance.
- At least 250 mm in front of the cabinet is reserved for maintenance.

14.2 Mounting Bracket and Attachment Plate

This section describes mounting brackets and attachment plates for installing a cabinet.

14.2.1 Mounting Bracket

This section describes mounting brackets for installing a cabinet.

Mounting Bracket for the Cabinet

Figure 14-2 shows the mounting bracket for the cabinet.

Copyright © Huawei Technologies Co., Ltd.

Figure 14-2 Mounting bracket for the cabinet

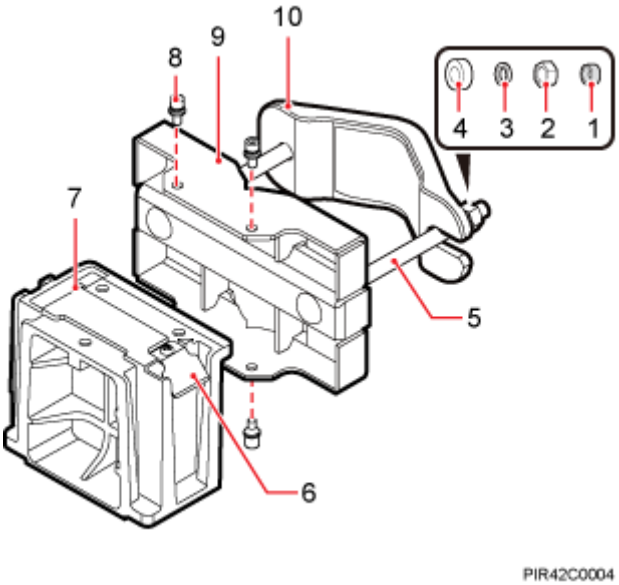

(1) Plastic cap	(2) Standard M10 nut	(3) Spring washer	(4) Thick flat washer	(5) Square-neck bolt
(6) Hoist clamp on the main bracket	(7) Main bracket	(8) Inner hexagon screw	(9) Pole installation bracket	(10) Auxiliary bracket

Mounting Bracket for the Metal Grid

Figure 14-3 shows the mounting bracket for the metal grid.

Figure 14-3 Mounting bracket for the metal grid

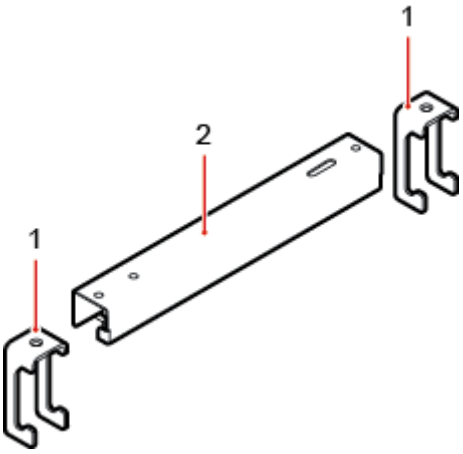

(1) Clamping jaw	(2) Horizontal bar

Copyright © Huawei Technologies Co., Ltd.

14.2.2 Attachment Plate

This section describes attachment plates for installing a cabinet.

Attachment Plate on the Cabinet Side

Figure 14-4 shows the attachment plate on the cabinet side.

Figure 14-4 Attachment plate on the cabinet side

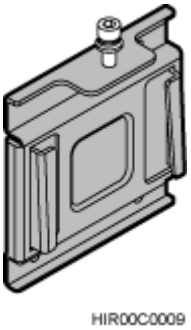

Attachment Plate at the Cabinet Bottom

Figure 14-5 shows the attachment plate at the cabinet bottom.

Figure 14-5 Attachment plate at the cabinet bottom

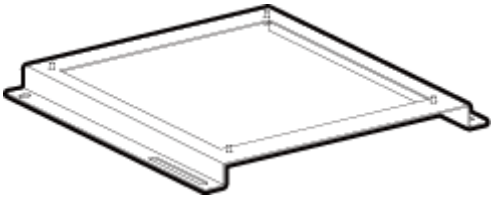

14.3 Installing a Cabinet

This section describes the procedure and precautions for installing a cabinet.

14.3.1 Installing the Cabinet on a Wall

This section describes the procedure and precautions for installing the cabinet on a wall.

Procedure

Step 1 Disassemble the cabinet mounting brackets, as shown in Figure 14-6.

Copyright © Huawei Technologies Co., Ltd.

Figure 14-6 Disassembling the mounting brackets

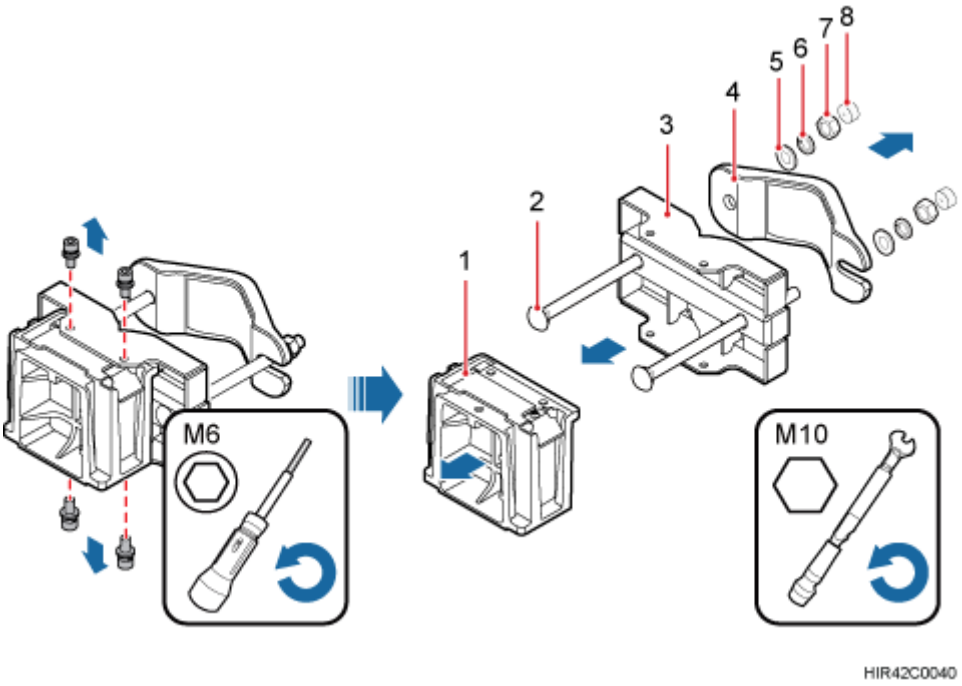

(1) Main bracket	(2) Square-neck bolt	(3) Pole installation bracket	(4) Auxiliary bracket
(5) Flat washer	(6) Spring washer	(7) Nut	(8) Plastic cap

1. Use an M6 inner hexagon torque screwdriver to remove the four inner hexagon screws on the pole installation bracket, and remove the main bracket from the pole installation bracket.
2. Use an M10 torque wrench to loosen the nuts on the two square-neck bolts, and remove the plastic cap, nuts, spring washers, flat washers, square-neck bolts, and pole installation bracket from the auxiliary bracket.

Step 2 Drill holes at the anchor points, and then insert expansion anchor bolt assemblies, as shown inFigure 14-7.

Copyright © Huawei Technologies Co., Ltd.

Figure 14-7 Drilling a hole and inserting expansion anchor bolt assemblies

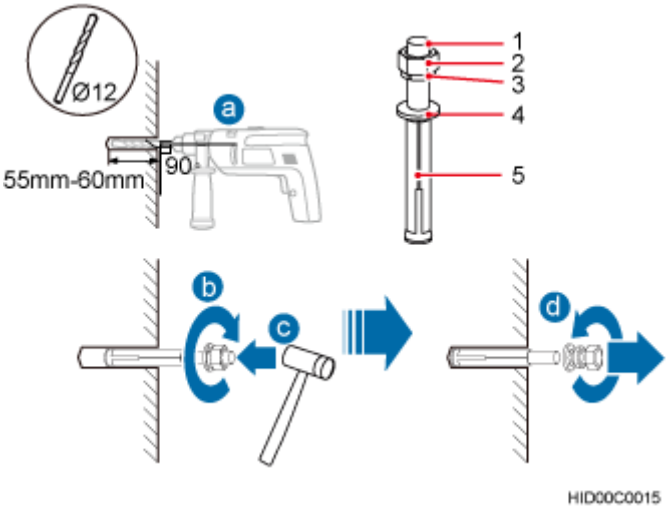

(1) M10x80 bolt	(2) Nut	(3) Spring washer	(4) Flat washer	(5) Expansion tube

1. Use a hammer drill with a φ8 bit to drill holes vertically at the marked anchor points. Ensure that the depth of each hole ranges from 45 mm (1.77 in.) to 50 mm (1.97 in.).

NOTICE

Take proper safety measures to protect your eyes and respiratory tract against the dust before drilling holes.

2. Use a vacuum cleaner to clear the dust out from inside and around the holes, and measure the distances between holes. If any of the holes is beyond the acceptable range, mark a new anchor point and drill a new hole.
3. Tighten the expansion bolts slightly, and place each expansion bolt vertically into each hole.
4. Use a rubber mallet to pound the expansion anchor bolt until it goes all the way into the hole.
5. Tighten and then loosen the expansion bolt, and remove the M10 bolt, spring washer, and flat washer in sequence.

NOTICE

After dismantling an expansion anchor bolt, ensure that the top of the expansion tube is on the same level as the wall. Otherwise, the device cannot be installed on the wall evenly and securely.

Step 3 Install the pole installation bracket on the expansion anchor bolts, place the flat washers, spring washers, and nuts through the expansion anchor bolts in sequence, and then use a 16

Copyright © Huawei Technologies Co., Ltd.

mm (0.63 in.) torque socket to tighten the nuts to 30 N·m (265.52 lbf·in.), as shown in Figure 14-8.

Figure 14-8 Installing the pole installation bracket on the expansion anchor bolts

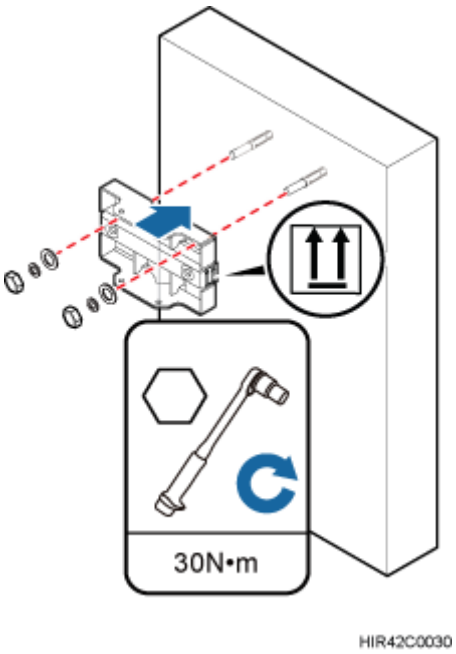

NOTICE

Verify that the arrows on the pole installation bracket are pointing up.

Step 4 Install the main bracket onto the pole installation bracket, and use an inner hexagon screwdriver to tighten four M6x16 inner hexagon screws to 5 N·m (44.25 lbf·in.) so that the main bracket and pole installation bracket are firmly secured, as shown in Figure 14-9.

Copyright © Huawei Technologies Co., Ltd.

Figure 14-9 Installing the main bracket

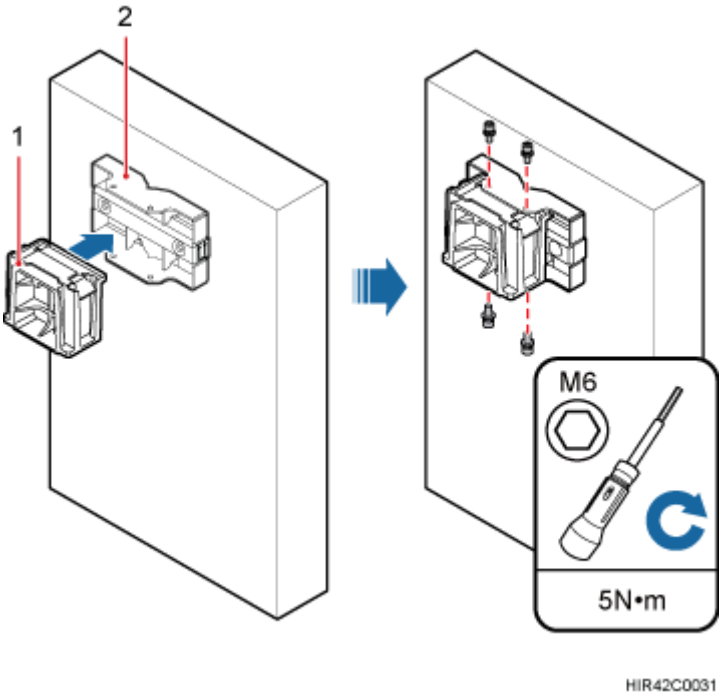

(1) Installing the main bracket	(2) Installing the main bracket

Step 5 Install the attachment plate on the cabinet side onto the rear of the cabinet, and use a torque screwdriver to tighten the stainless steel screws on the attachment plate to 5 N·m (44.25 lbf·in.), as shown in Figure 14-10.

Figure 14-10 Installing the attachment plate onto the rear of the cabinet

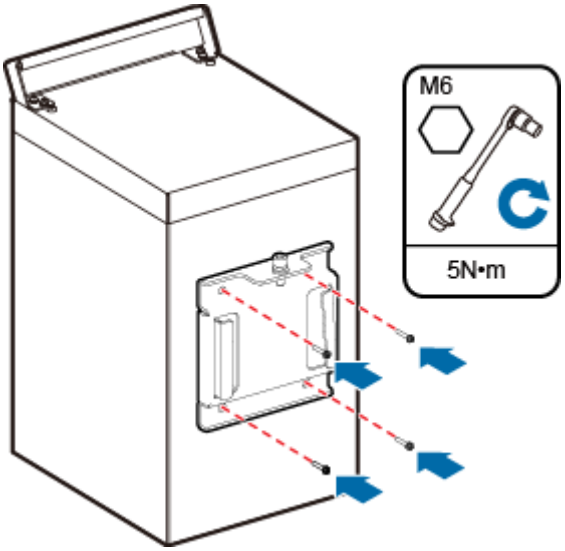

Step 6 Install the cabinet onto the main bracket, as shown in Figure 14-11.

Copyright © Huawei Technologies Co., Ltd.

Figure 14-11 Installing the cabinet onto the main bracket

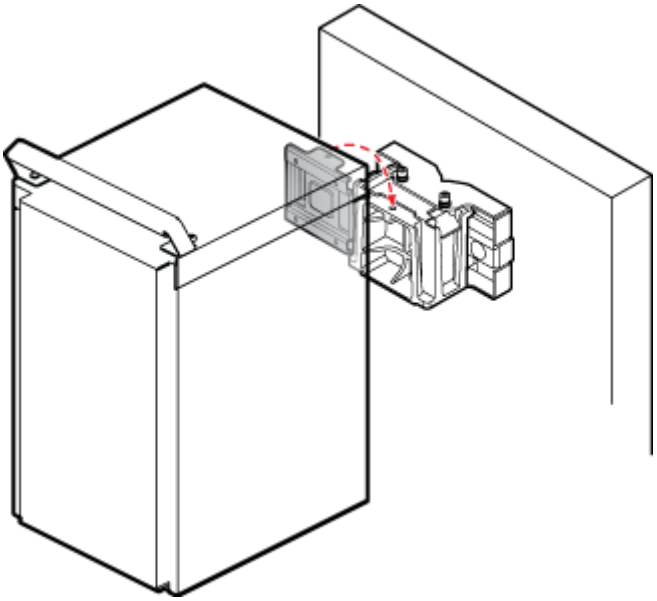

Step 7 Use an inner hexagon screwdriver to tighten the captive screw into the hole of the attachment plate and main mounting bracket to 5 N·m (44.25 lbf·in.) so that the attachment plate and main mounting bracket are firmly secured, as shown in Figure 14-12.

Figure 14-12 Securing the captive screw into the connection hole

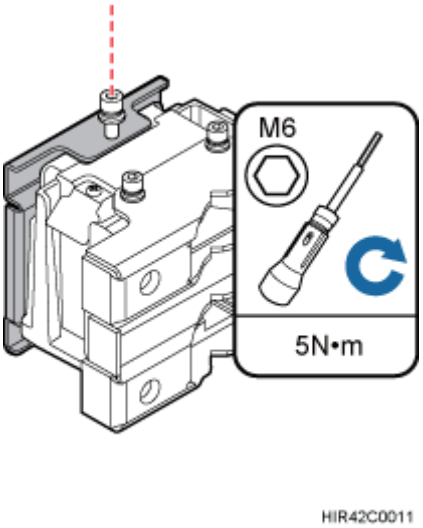

----End

14.3.2 Installing the Cabinet on a Pole

This section describes the procedure and precautions for installing a cabinet on a pole.

Copyright © Huawei Technologies Co., Ltd.

Procedure

Step 1 Install the cabinet mounting brackets, as shown in Figure 14-13.

Figure 14-13 Installing the cabinet mounting brackets

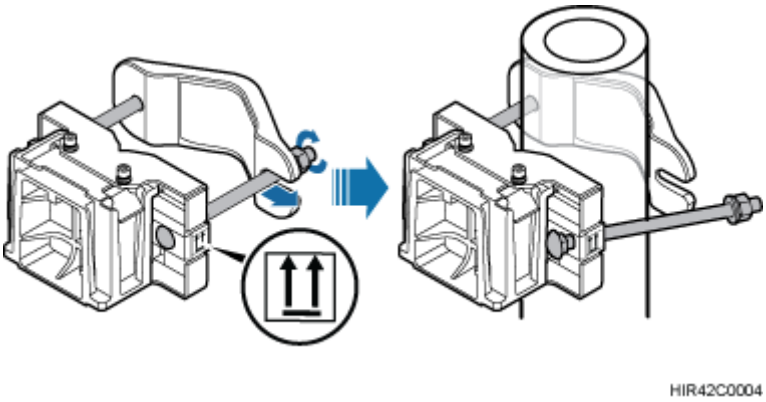

NOTE
Verify that the arrows on the mounting brackets are pointing up.

1. Adjust the position of the nut and remove one end of the square-neck bolt from the slot on the auxiliary bracket.
2. Slide the mounting brackets onto the pole horizontally and insert the square-neck bolt into the slot.

Step 2 Use a 16 mm (0.63 in.) M10 torque wrench to tighten the nuts to 40 N·m (354.03 lbf·in.) so that the mounting brackets are secured onto the pole, as shown in Figure 14-14.

NOTE
Tighten the nuts on the two square-neck bolts alternatively. After the main and auxiliary brackets are secured properly, measure the spacing between the brackets on both sides and ensure that the spacing is the same on the two sides.

Copyright © Huawei Technologies Co., Ltd.

Figure 14-14 Securing the cabinet mounting brackets

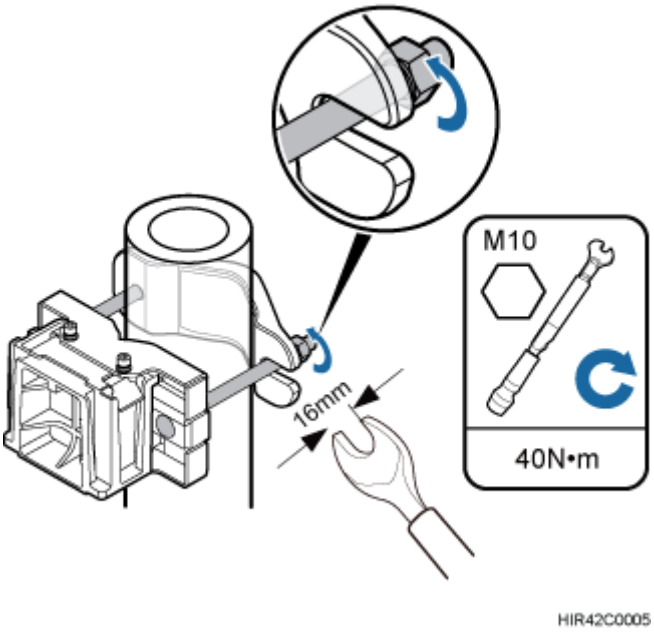

Step 3 Install the cabinet onto the main bracket, as shown in Figure 14-15.

Figure 14-15 Installing the cabinet onto the main bracket

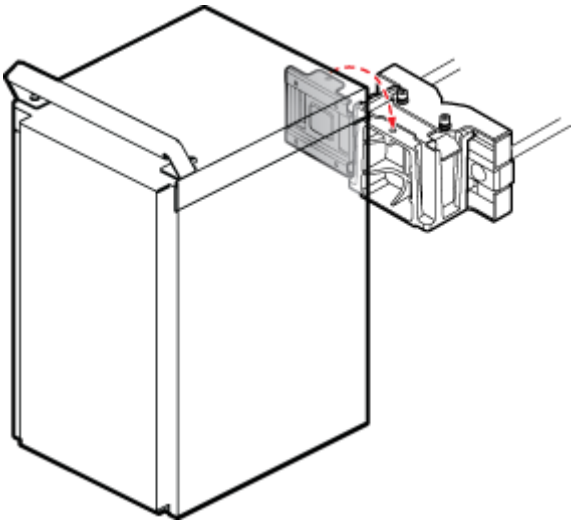

Step 4 Use an inner hexagon torque screwdriver to tighten the captive screw into the holes on the top of the attachment plate and main bracket to 5 N·m (44.25 lbf·in.) so that the attachment plate and main bracket are firmly secured, as shown in Figure 14-16.

Copyright © Huawei Technologies Co., Ltd.

Figure 14-16 Securing the captive screw into the connection hole

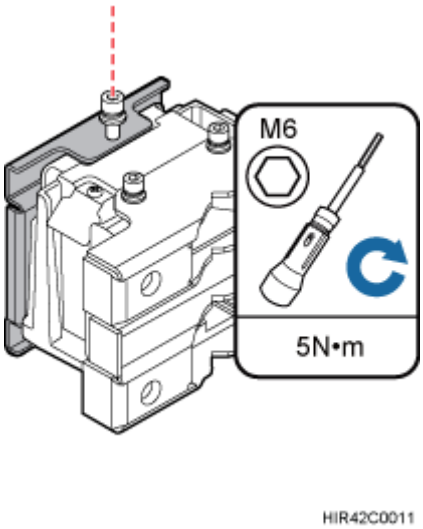

----End

14.3.3 Installing the Cabinet on U-steel

This section describes the procedure and precautions for installing the cabinet on U-steel.

Context

Figure 14-17 shows the top view of the cabinet installed on U-steel.

NOTICE

When the width of the narrower edges of the U-steel is less than 40 mm (1.57 in.), only the a and b modes are supported.

Copyright © Huawei Technologies Co., Ltd.

Figure 14-17 Top view of the cabinet

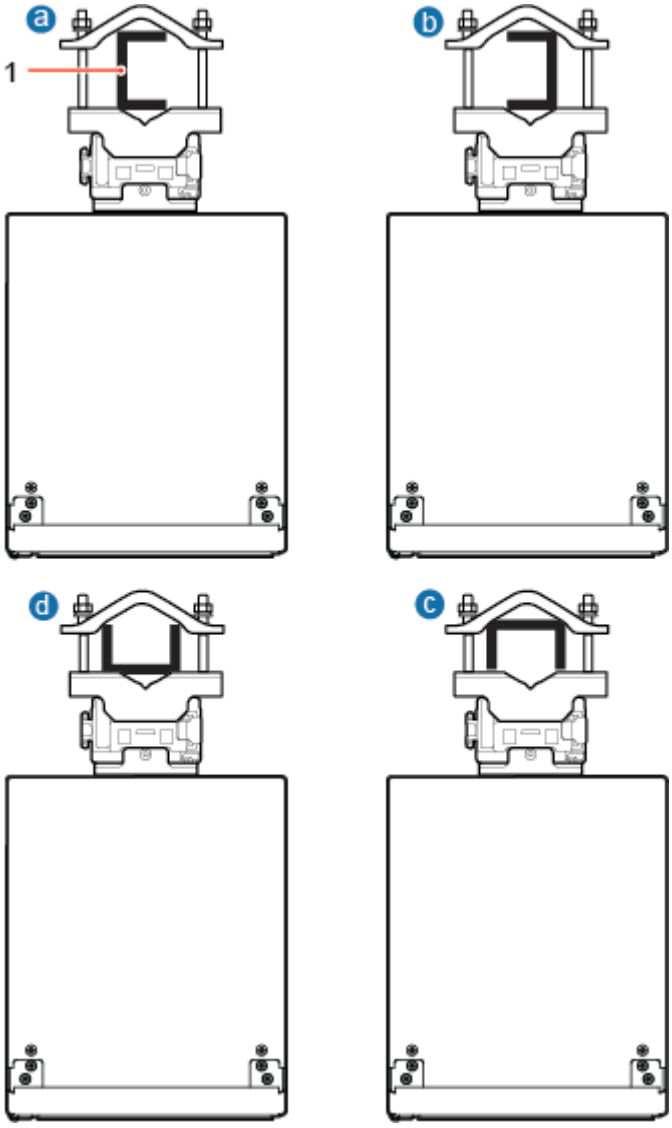

(1) U-steel

Procedure

Step 1 Install the cabinet mounting brackets, as shown in Figure 14-18.

Copyright © Huawei Technologies Co., Ltd.

Figure 14-18 Installing the cabinet mounting brackets

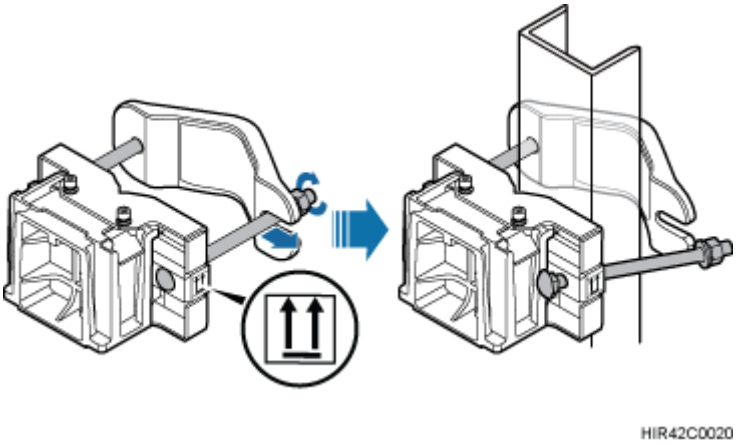

NOTE

Verify that the arrows on the mounting brackets are pointing up.

1. Adjust the position of the nut and remove one end of the square-neck bolt from the slot on the auxiliary bracket.
2. Slide the mounting brackets onto the U-steel horizontally and insert the square-neck bolt into the slot.

Step 2 Use a 16 mm (0.67 in.) M10 torque wrench to tighten the nuts to 40 N·m (354.03 lbf·in.) so that the mounting brackets are secured onto the U-steel, as shown in Figure 14-19.

NOTICE

Tighten the nuts on the two square-neck bolts alternatively. After the main and auxiliary brackets are secured properly, measure the spacing between the brackets on both sides and ensure that the spacing is the same on the two sides.

Copyright © Huawei Technologies Co., Ltd.

Figure 14-19 Securing the cabinet mounting brackets

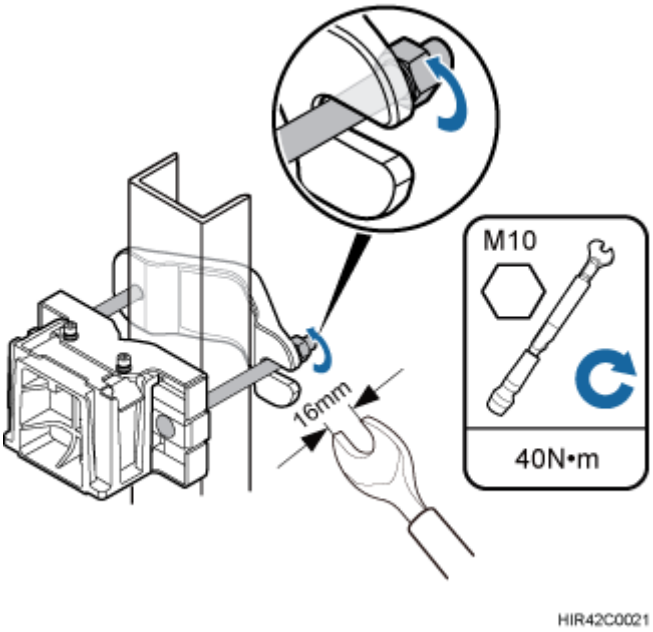

Step 3 Install the cabinet onto the main bracket, as shown in Figure 14-20.

Figure 14-20 Installing the cabinet onto the main bracket

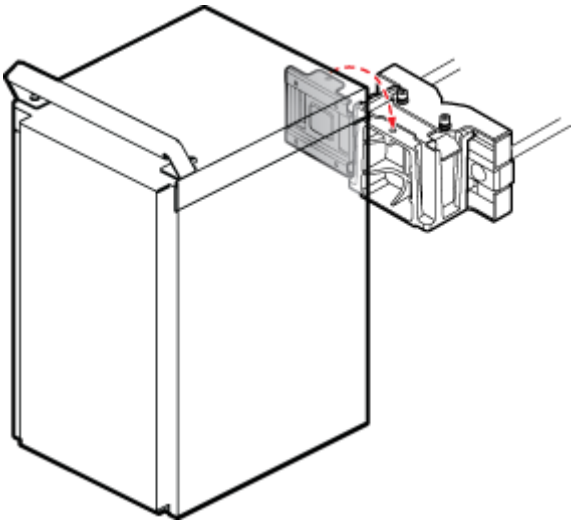

Step 4 Use an inner hexagon screwdriver to tighten the captive screw into the holes on the top of the attachment plate and main bracket to 5 N·m (44.25 lbf·in.) so that the attachment plate and main bracket are firmly secured, as shown in Figure 14-21.

Copyright © Huawei Technologies Co., Ltd.

Figure 14-21 Securing the captive screw into the connection hole

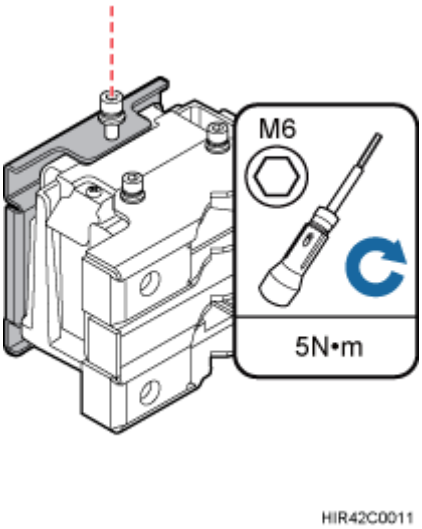

----End

14.3.4 Installing the Cabinet on Angle Steel

This section describes the procedure and precautions for installing the cabinet on angle steel.

Context

Figure 14-22 shows the top view of the cabinet installed on angle steel.

Figure 14-22 Top view of the cabinet

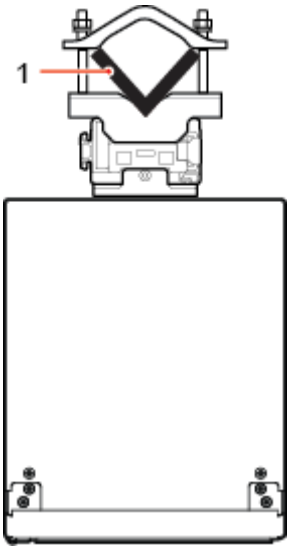

(1) Angle steel

Copyright © Huawei Technologies Co., Ltd.

Procedure

Step 1 Install the cabinet mounting brackets, as shown in Figure 14-23.

Figure 14-23 Installing the cabinet mounting brackets

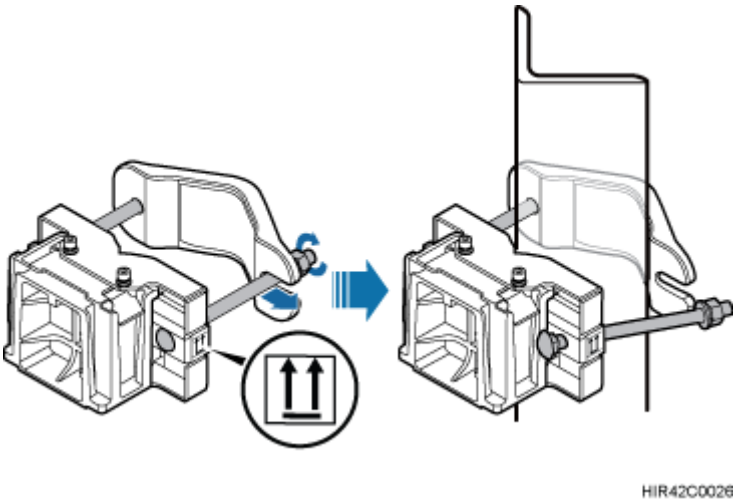

NOTE
Verify that the arrows on the mounting brackets are pointing up.

1. Adjust the position of the nut and remove one end of the square-neck bolt from the slot on the auxiliary bracket.
2. Slide the mounting brackets onto the angle steel horizontally and insert the square-neck bolt into the slot.

Step 2 Use a 16 mm (0.67 in.) M10 torque wrench to tighten the nuts to 40 N·m (354.03 lbf·in.) so that the mounting brackets are secured onto the angle steel, as shown in Figure 14-24.

NOTICE
Tighten the nuts on the two square-neck bolts alternatively. After the main and auxiliary brackets are secured properly, measure the spacing between the brackets on both sides and ensure that the spacing is the same on the two sides.

Copyright © Huawei Technologies Co., Ltd.

Figure 14-24 Securing the cabinet mounting brackets

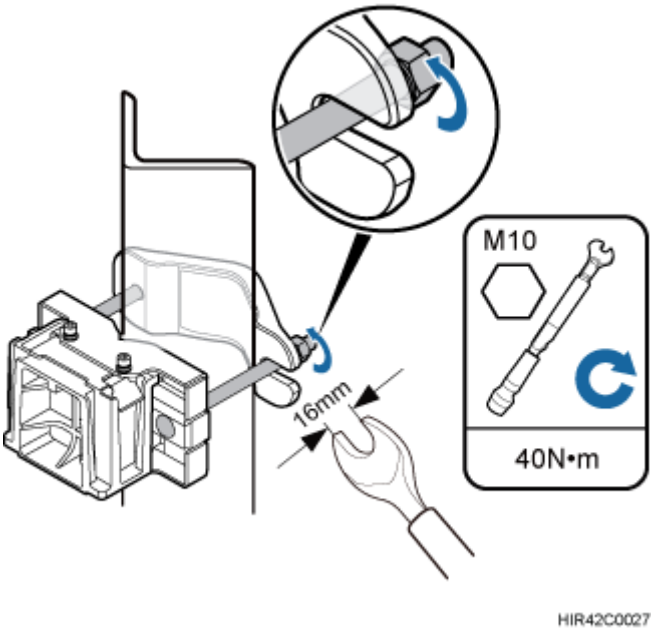

Step 3 Install the cabinet onto the main bracket, as shown in Figure 14-25.

Figure 14-25 Installing the cabinet onto the main bracket

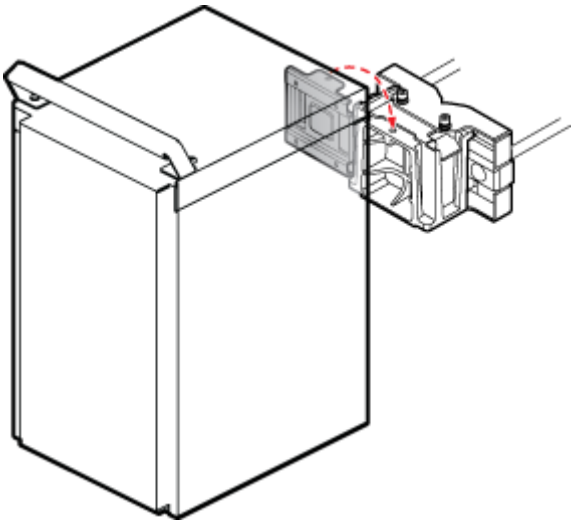

Step 4 Use an inner hexagon screwdriver to tighten the captive screw into the holes on the top of the attachment plate and main bracket to 5 N·m (44.25 lbf·in.) so that the attachment plate and main bracket are firmly secured, as shown in Figure 14-26.

Copyright © Huawei Technologies Co., Ltd.

Figure 14-26 Securing the captive screw into the connection hole

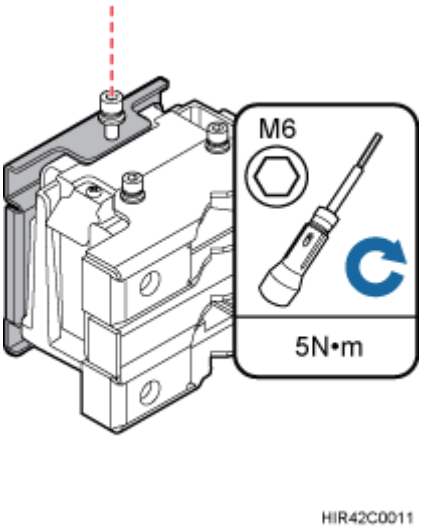

----End

14.3.5 Installing the Cabinet on Metal Grid

This section describes the procedure and precautions for installing the cabinet on metal grid. The cabinet can be vertically or horizontally installed on the metal grid.

Installing the cabinet vertically

1. Install the mounting bracket onto the metal grid, as shown in Figure 14-27.

NOTE

The mounting bracket is recommended to install onto the metal grid close to the round hole.

Copyright © Huawei Technologies Co., Ltd.

Figure 14-27 Installing the mounting bracket onto the metal grid

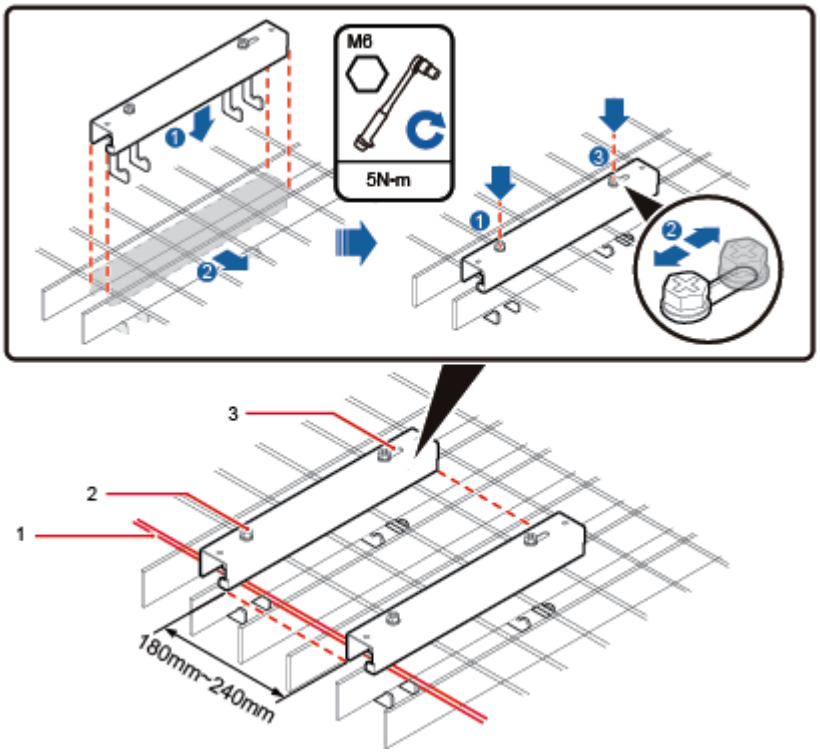

(1) Metal grid A (2) Round hole (3) Oblong hole

2. Install the cabinet onto the metal grid, as shown in Figure 14-28.

Copyright © Huawei Technologies Co., Ltd.

Figure 14-28 Installing the cabinet onto the metal grid

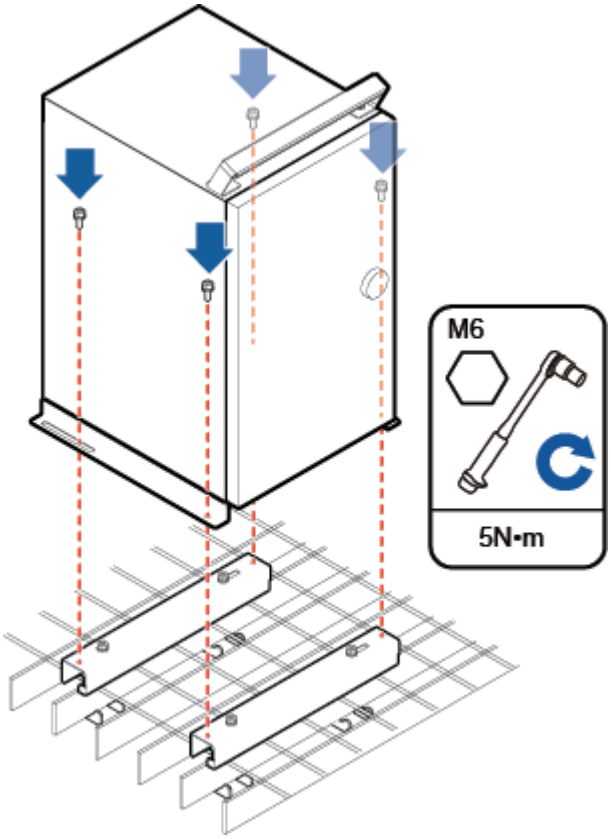

Installing the cabinet horizontally

1. Install the mounting bracket onto the metal grid, as shown in Figure 14-29.

NOTE

The mounting bracket is recommended to install onto the metal grid close to the round hole.

Copyright © Huawei Technologies Co., Ltd.

Figure 14-29 Installing the mounting bracket onto the metal grid

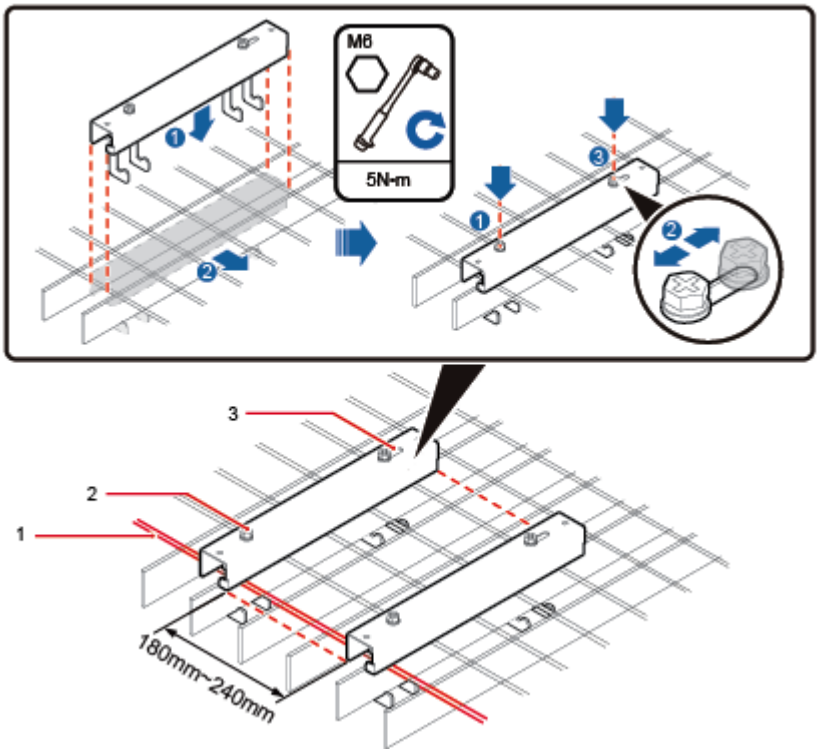

(1) Metal grid A (2) Round hole (3) Oblong hole

2. Use an hexagon screwdriver to remove the attachment plate from the bottom of the cabinet, reinstall the attachment plate onto the side of the cabinet, and tighten the four stainless screws to 5 N·m (44.25 lbf·in.), as shown in Figure 14-30.

Copyright © Huawei Technologies Co., Ltd.

Figure 14-30 Installing the attachment plate onto the side of the cabinet

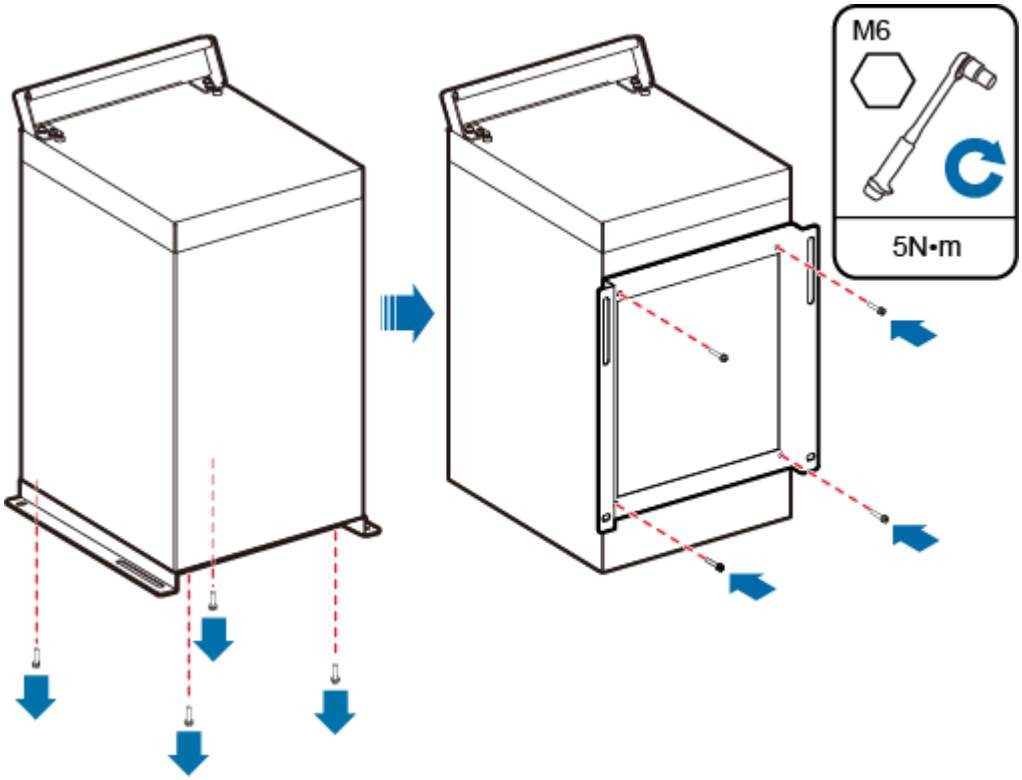

3. Install the cabinet onto the mounting bracket, as shown in Figure 14-31.

Copyright © Huawei Technologies Co., Ltd.

Figure 14-31 Installing the cabinet onto the mounting bracket

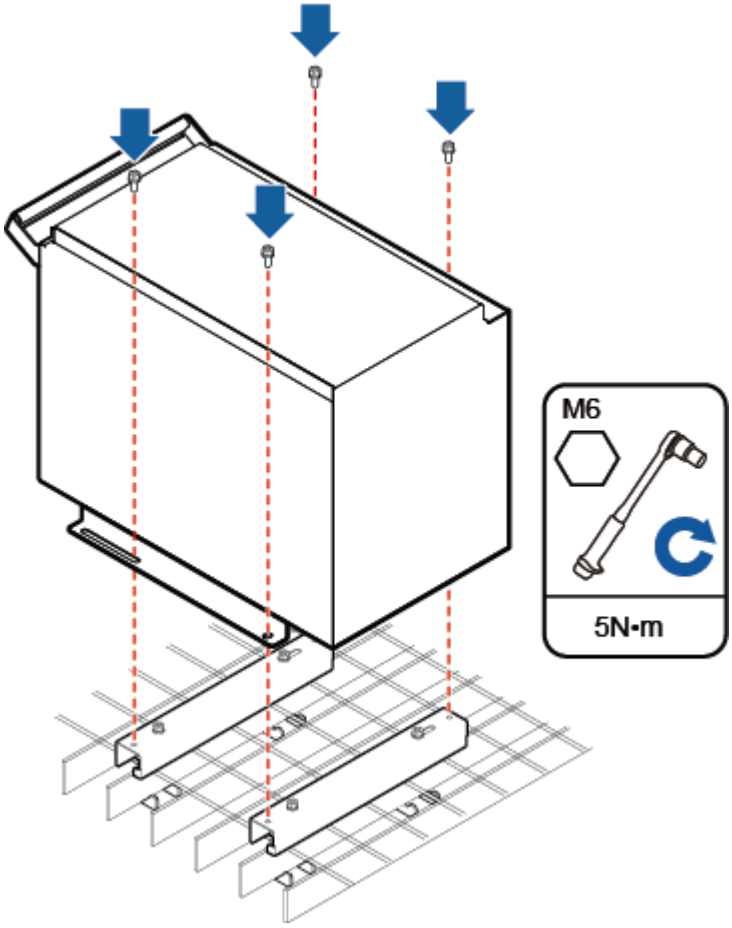

14.3.6 Installing the Cabinet on the Floor

This section describes the procedure and precautions for installing the cabinet on the floor.

Procedure

Step 1 Keep the horizontal bar of the steel mesh mounting kit clinging to the floor, use a level to verify that the marking-off template is placed horizontally, and then use a marker to mark anchor points, as shown in Figure 14-32.

Copyright © Huawei Technologies Co., Ltd.

Figure 14-32 Marking anchor points

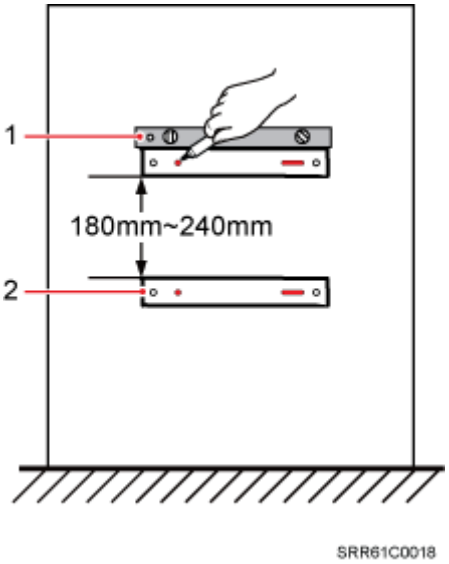

(1) Level (2) Mounting bracket for the metal grid

Step 2 Drill holes at the anchor points, and then insert expansion anchor bolt assemblies, as shown in Figure 14-33.

Figure 14-33 Drilling a hole and inserting expansion anchor bolt assemblies

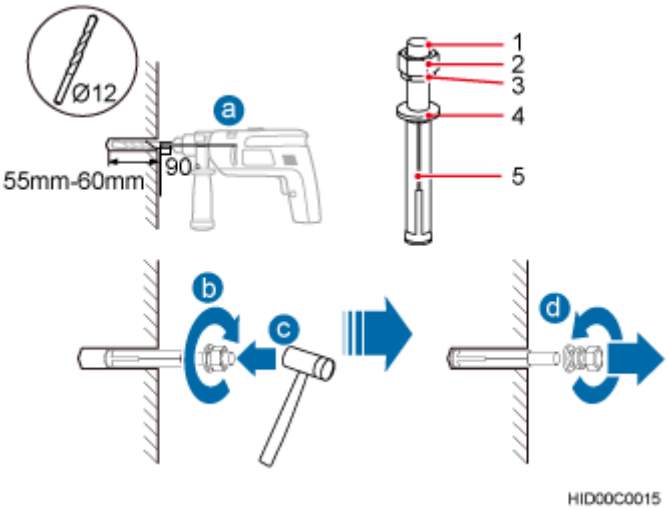

(1) M10x80 bolt	(2) Nut	(3) Spring washer	(4) Flat washer	(5) Expansion tube

1. Use a hammer drill with a Φ12 bit to drill holes vertically at the marked anchor points with the depth ranging from 55 mm (2.17 in.) to 60 mm (2.36 in.), use a vacuum cleaner to clear the dust out from inside and around the holes, and measure the distances between holes. If any of the holes is beyond the acceptable range, mark a new anchor point and drill a new hole.

Copyright © Huawei Technologies Co., Ltd.

CAUTION

Take proper safety measures to protect your eyes and respiratory tract against the dust before drilling holes.

2. Tighten the expansion anchor bolts slightly and place one vertically into each hole.
3. Use a rubber mallet to pound the expansion anchor bolt until it goes all the way into the hole.
4. Tighten and then loosen the expansion bolt, and remove the M10 bolt, spring washer, and flat washer in sequence.

CAUTION

After dismantling an expansion anchor bolt, ensure that the top of the expansion tube is on the same level as the wall. Otherwise, the device cannot be installed on the wall evenly and securely.

Step 3 Fit the horizontal bar of the steel mesh mounting kit on the expansion anchor bolts, place the flat washers, spring washers, and nuts through the expansion anchor bolts in sequence, and then use a 16 mm (0.63 in.) torque socket to tighten the nuts to 30 N·m (265.52 lbf·in.), as shown in Figure 14-34.

Figure 14-34 Installing mounting bracket on the expansion anchor bolts

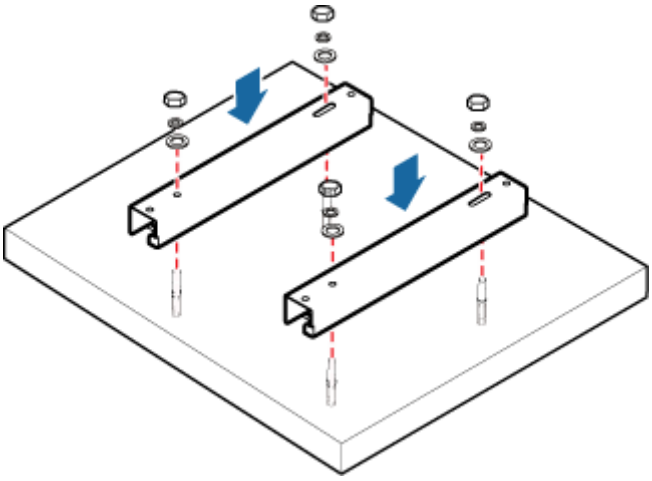

Step 4 Use a hexagon screwdriver to remove the attachment plate from the bottom of the cabinet, reinstall the attachment plate onto the side of the cabinet, and tighten the four stainless screws to 5 N·m (44.25 lbf·in.), as shown in Figure 14-35.

Copyright © Huawei Technologies Co., Ltd.

Figure 14-35 Installing the attachment plate onto the side of the cabinet

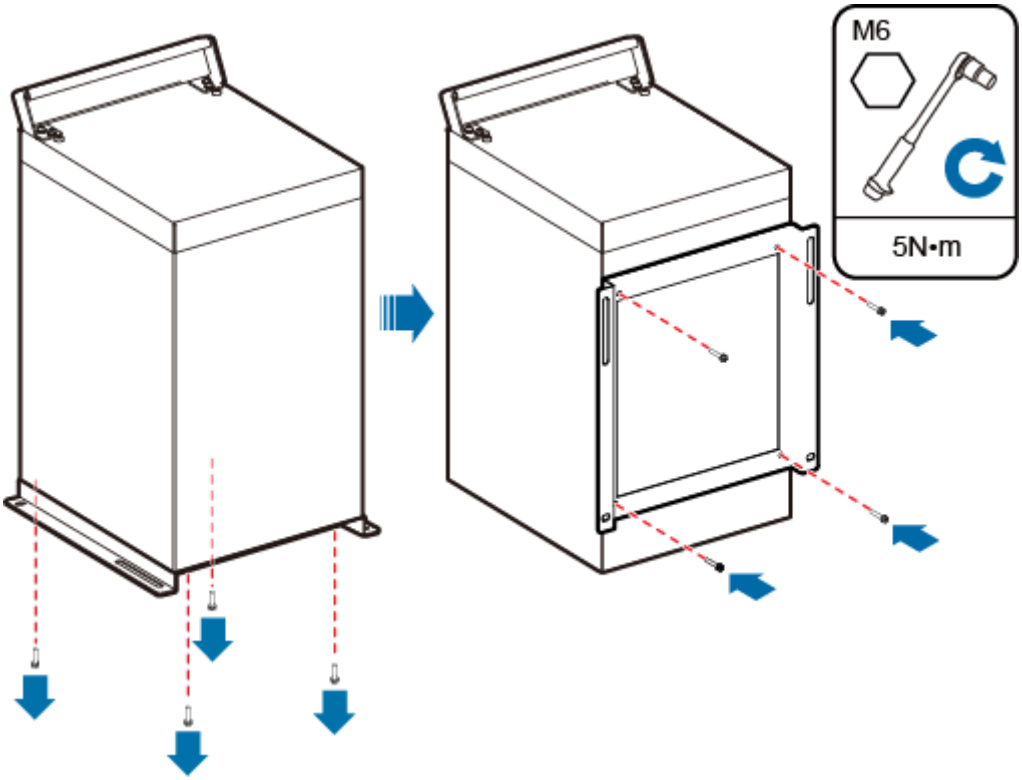

Step 5 Install the cabinet onto the mounting bracket, as shown in Figure 14-36.

Copyright © Huawei Technologies Co., Ltd.

Figure 14-36 Installing the cabinet onto the mounting bracket

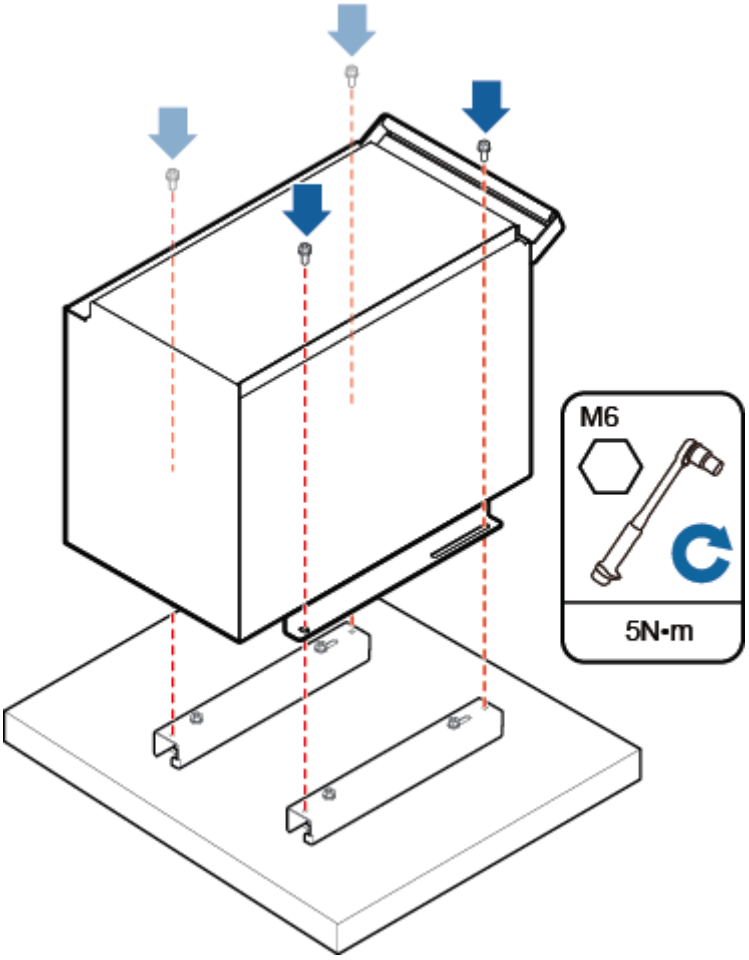

----End

14.4 Installing Cabinet Cables

This chapter describes the procedure for installing cabinet cables.

14.4.1 Cable Connections

This section describes the cable connections for the cabinet.

- At horizontal installation, ensure that all cable outlets can be protected against the rain.
- After cable connections are complete, apply firestop putty to all cable outlets on the cabinet for waterproofing.

Figure 14-37 shows the cable connections for the cabinet.

Copyright © Huawei Technologies Co., Ltd.

Figure 14-37 Cable connections when a pRRU3901 is installed

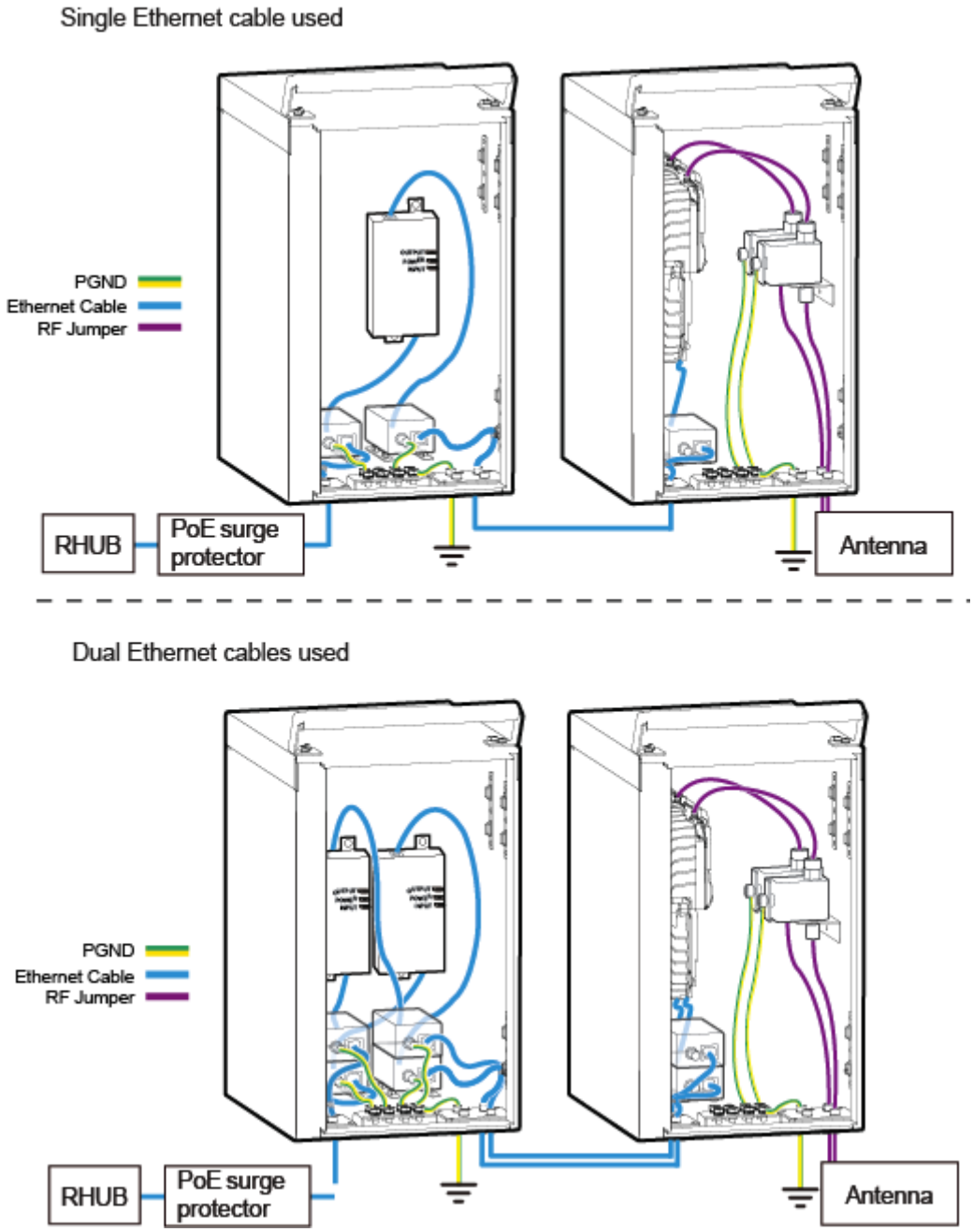

Copyright © Huawei Technologies Co., Ltd.

Figure 14-38 Cable connections when a pRRU3902 is installed

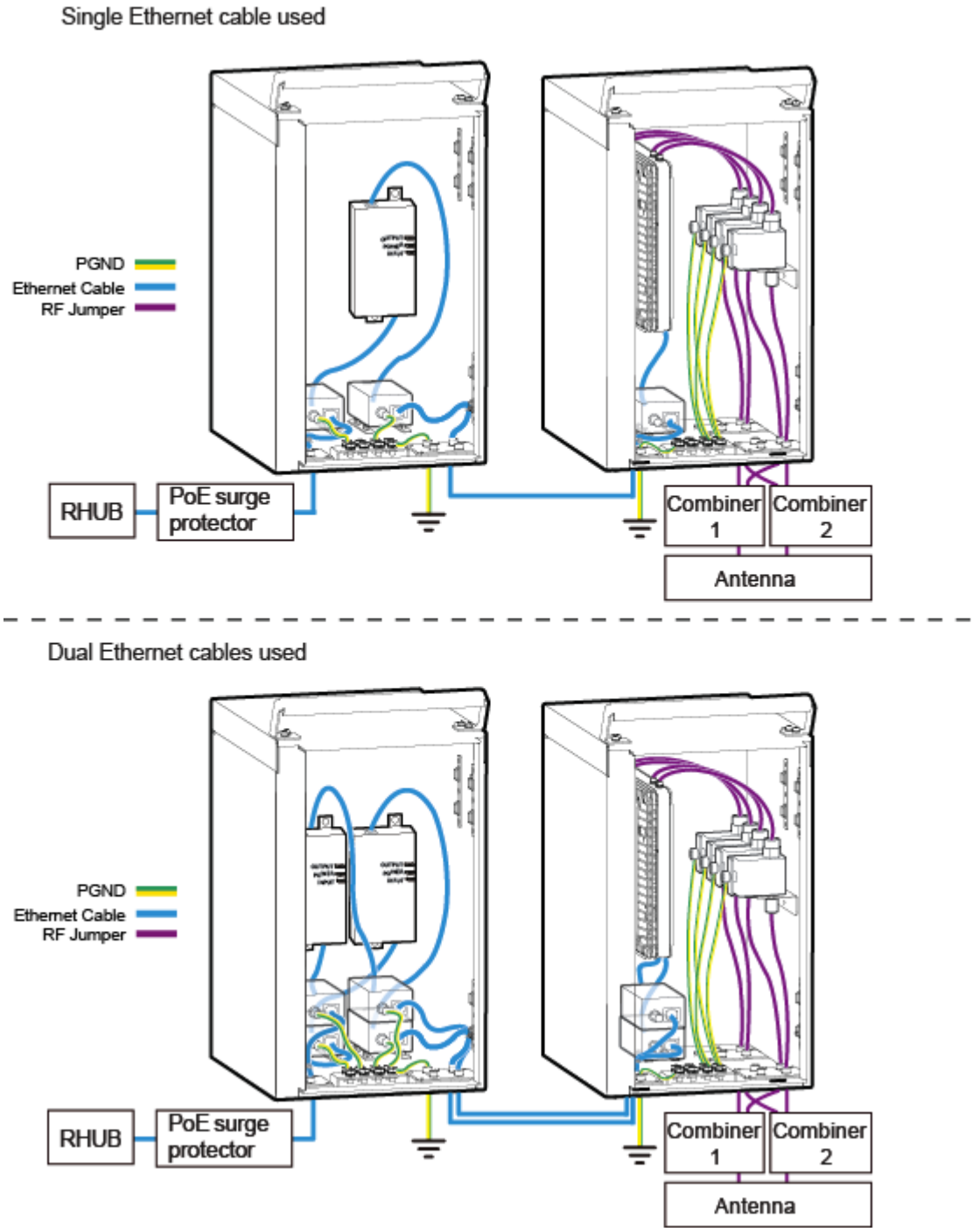

NOTE

- For details about installation of RHUB Ethernet cables in the cabinet, see 6.4.6 Installing Ethernet Cable. For details about installation of pRRU3901 Ethernet cables in the cabinet, see 7.5.7 Installing an Ethernet Cable. For details about installation of pRRU3902 Ethernet cables in the cabinet, see 8.4.5 Installing a pRRU3902 Ethernet Cable.
- For details about installation of pRRU3901 RF jumpers in the cabinet, see 7.5.8 Installing an RF jumpers (Optional). For details about installation of pRRU3902 RF jumpers in the cabinet, see 8.4.7 Installing a pRRU3902 RF Jumper (Optional).

Copyright © Huawei Technologies Co., Ltd.

- For details about installation of PoE surge protector PGND cables, see 12 (Optional) Installing the PoE Surge Protector and Cables. For details about installation of RF surge protector PGND cables, see 13 (Optional) Installing the RF Surge Protector and Cables.

14.4.2 Installing a PGND Cable for the Cabinet

This section describes the procedure for installing a PGND cable for the cabinet.

Prerequisites

The OT terminals at both ends of the PGND cable are prepared.

Context

The yellow and green or green PGND cable is a single cable. The cross-sectional area of the PGND cable is 6 mm^2 (0.009 $in.^2$). Both ends of the cable are OT terminals, as shown in Figure 14-39.

Figure 14-39 Exterior of a PGND cable

(1) OT terminal (6mm^2, M5) (2) OT terminal (6mm^2, M6)

NOTE

- If the PGND cable is provided by the customer, a copper-core cable with a minimum cross-sectional area of 6 mm^2 (0.009 $in.^2$) or 10 AWG is recommended.
- The OT terminals at both ends of the PGND cable are assembled at the site.
- The M6 OT terminal has the default size. You can replace it with another OT terminal of the expected size based on the site requirement.
- Ensure proper grounding of the cabinet using a PGND cable.
- When installing the PGND cable, tightly press the OT terminal in the correct direction, as shown in Figure 14-40.

Figure 14-40 Correct direction of an OT terminal for the PGND cable

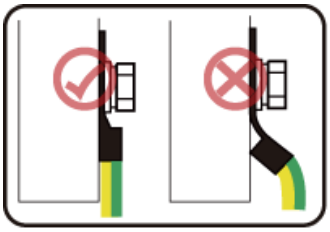

Copyright © Huawei Technologies Co., Ltd.

Procedure

Step 1 Use a torque screwdriver or Phillips screwdriver to secure the M4 OT terminal at one end of the PGND cable to the ground screw on the cabinet panel with a torque of 1.4 N•m. If the OT terminal is a one-hole OT terminal, connect it to the ground screw on the lower part of the cabinet panel, as shown in Figure 14-41.

Figure 14-41 Installing the PGND cable for the cabinet

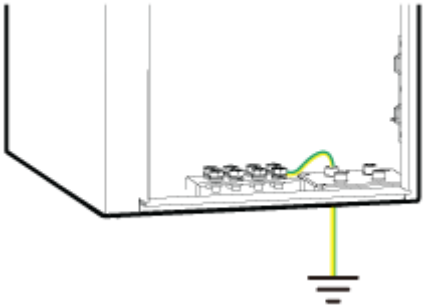

Step 2 Use a torque screwdriver or Phillips screwdriver to secure the M6 OT terminal at one end of the PGND cable to the wiring terminal on the ground bar at the site with a torque of 1.4 N•m.

----End

Copyright © Huawei Technologies Co., Ltd.

15 Appendix

About This Chapter

This chapter describes reference information during installation.

15.1 MAC Collection Template

This section describes the MAC collection template for a pRRU3901 with three transmission ports.

15.2 Assembling a Shielded RJ45 Connector and an Ethernet Cable

This section describes how to assemble a shielded RJ45 connector and an Ethernet cable. A straight-through cable is used as an example.

15.3 DBS3900 LampSite Engineering Label

This section describes the content and presents the exterior of DBS3900 LampSite engineering labels.

15.4 Attaching an L-Shaped Label

This section describes the procedure and precautions to be taken for attaching an L-shaped label.

15.5 Attaching a Sign Plate Label

This section describes the procedures and precautions for attaching a sign plate label.

15.1 MAC Collection Template

This section describes the MAC collection template for a pRRU3901 with three transmission ports.

The MAC collection template is used to record the installation position, MAC address of the site at the initial installation stage to facilitate subsequent commissioning and maintenance. Table 15-1 shows the MAC collection template.

Copyright © Huawei Technologies Co., Ltd.

Table 15-1 MAC collection template

No.	Site Number	Site Name	WIFI MAC	Location Information
Sample	*01*	*pRRU3901*		*xx floor, xx building, xx mansion*
Note: The MAC collection template is essential to the engineering stage and subsequent maintenance, especially when multiple devices are installed at a short distance. This is because the template defines the radio network to access. Maintain this template with caution.				

15.2 Assembling a Shielded RJ45 Connector and an Ethernet Cable

This section describes how to assemble a shielded RJ45 connector and an Ethernet cable. A straight-through cable is used as an example.

Context

Figure 15-1 shows the components of an RJ45 connector and an Ethernet cable.

Copyright © Huawei Technologies Co., Ltd.

Figure 15-1 Components of an RJ45 connector and an Ethernet cable

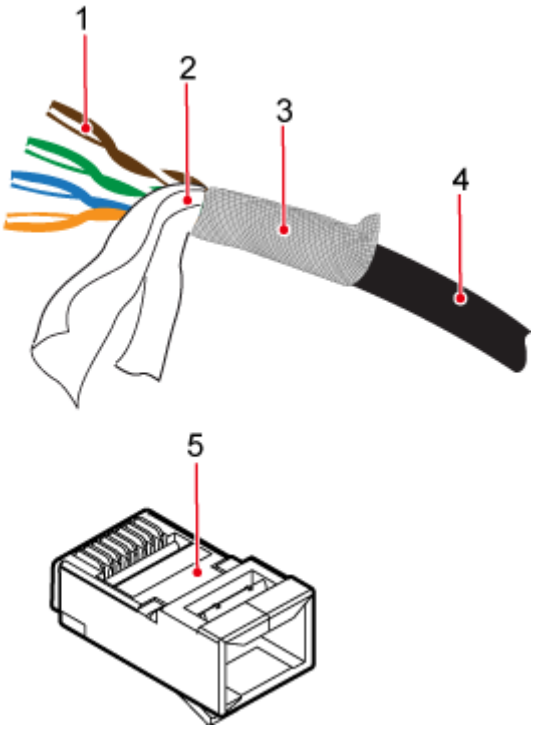

(1) Core wire	(2) Aluminum foil	(3) Braided layer	(4) Outer jacket	(5) RJ45 connector

Procedure

Step 1 Remove the outer jacket (25 mm) of the Ethernet cable, tip the braided layer outwards evenly, and cut off the aluminum foil and guard space. See Figure 15-2.

NOTE

- Do not damage the shield layer when removing the jacket.
- Do not damage the insulation layer of the Ethernet cable when removing the shield layer.

Figure 15-2 Removing the jacket of an Ethernet cable

Copyright © Huawei Technologies Co., Ltd.

Step 2 Sequence the twisted pair wires neatly by color, and cut the wire end evenly, with a remaining length of 16 mm. See Figure 15-3.

Figure 15-3 Arranging twisted pair wires

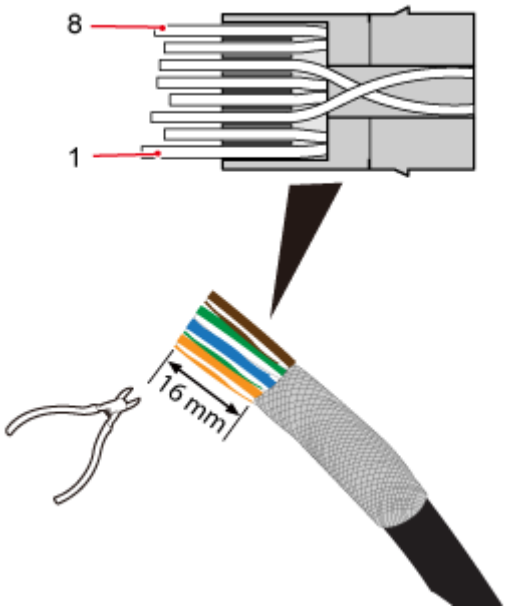

Table 15-2 Pin assignment

Pin SN	Wire Color
1	White and orange
2	Orange
3	White and green
4	Blue
5	White and blue
6	Green
7	White and brown
8	Brown

Step 3 Insert the sequenced twisted pair wires into the RJ45 connector. See Figure 15-4.

Copyright © Huawei Technologies Co., Ltd.

Figure 15-4 Inserting wires into the RJ45 connector

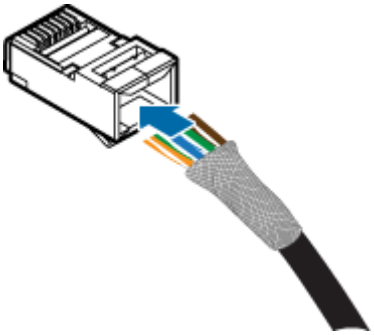

NOTICE

- When inserting the wires, ensure that the braided layer that was tipped outwards has inserted inside the connector.
- Observe the side or front of the RJ45 connector to ensure that the core wires are inserted to the bottom of the RJ45 connector.

Step 4 Use a crimping tool to crimp the connector. See Figure 15-5.

Figure 15-5 Crimping the connector

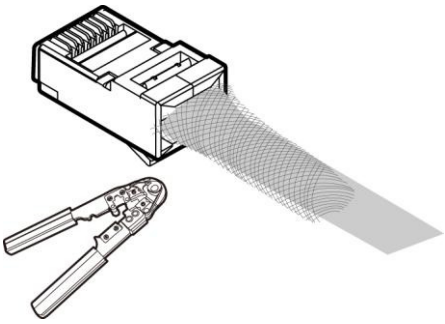

Step 5 Use a cable cutter to evenly cut off the protruding braided layer of the connector along the wire holder. See Figure 15-6.

Figure 15-6 Cutting off the excess braided layer

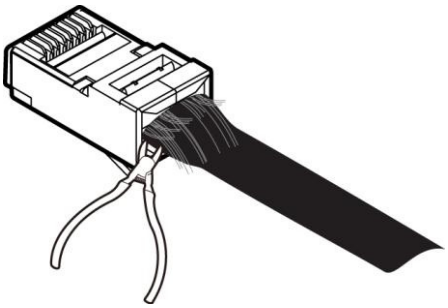

Copyright © Huawei Technologies Co., Ltd.

----End

15.3 DBS3900 LampSite Engineering Label

This section describes the content and presents the exterior of DBS3900 LampSite engineering labels.

Label Content

The DBS3900 LampSite engineering labels include the RHUB power label, RHUB ground label, RHUB alarm or monitoring label, RHUB optical transmission label, and RHUB network transmission label, the pRRU power label, pRRU network transmission label, pRRU antenna label. The engineering labels are used for DBS3900 LampSite units RHUB and pRRU for indoor scenarios.

By default, blank labels are delivered for DBS3900 LampSite and must be filled in onsite. Table 15-3 describes the content of engineering labels.

Table 15-3 DBS3900 LampSite Engineering Label Content

NE	Label Content		Description	Corresponding port on the base station
RHUB	Power label	RHUBx PWR	Label for the RHUBx power cable. **x** specifies the number of RHUBs and cannot exceed the maximum RHUB number supported by the networking.	**PWR**
	Ground label	RHUBx PGND	Label for the RHUBx ground cable. **x** specifies the number of RHUBs and cannot exceed the maximum RHUB number supported by the networking.	⏚
	Alarm or monitoring label	RHUBx EXT_ALM	Label for the RHUBx alarm cable. **x** specifies the number of RHUBs and cannot exceed the maximum RHUB number supported by the networking.	**EXT-ALM**
	Optical transmission label	RHUBx BBU/RHUBa/RHUBb	Label for the RHUBx CPRI cable. • **x** specifies the number of RHUBs and cannot exceed the maximum	**CPRI0** or **CPRI1**

Copyright © Huawei Technologies Co., Ltd.

NE	Label Content		Description	Corresponding port on the base station
			RHUB number supported by the networking. • **a** can be set to **0** or **1**. **0** and **1** respectively correspond to CPRI0 port and CPRI1 port of the upper-level RHUB. • **b** can be set to **0** or **1**. **0** and **1** respectively correspond to CPRI0 port and CPRI1 port of the lower-level RHUB.	
	Network transmission label	RHUBx CPRI_Ea	Label for the RHUBx Ethernet cable. • **x** specifies the number of RHUBs and cannot exceed the maximum RHUB number supported by the networking. • **a** can be set to **0** or **1**. **0** and **1** respectively correspond to CPRI_E0 port and CPRI_E1 port of the pRRU.	**CPRI_E0** to **CPRI_E7**
pRRU	Power label	pRRUy PWR	Label for the pRRUy power cable. **y** specifies the number of pRRUs and cannot exceed the maximum pRRU number supported by the networking.	**PWR** or **CPRI_E0**
	Network transmission label	pRRUy CPRI_Ea	Label for the pRRUy Ethernet cable. • **y** specifies the number of pRRUs and cannot exceed the maximum pRRU number supported by the networking. • **a** can be set to **0** to **7**, which respectively correspond to CPRI_E0 port to CPRI_E7 port of the RHUB.	**CPRI_E0** or **CPRI_E1**

Copyright © Huawei Technologies Co., Ltd.

NE	Label Content		Description	Corresponding port on the base station
	Antenna label	pRRUy ANTa	Label for the pRRUy RF Jumper. • **y** specifies the number of pRRUs and cannot exceed the maximum pRRU number supported by the networking. • **a** can be set to **0** to **5**, which respectively correspond to **ANT0** port and **ANT5** port of the pRRU.	**ANT0** to **ANT5**

NOTE

- In the label, **RHUB** and **pRRU** identify the specific DBS3900 LampSite NEs.
- If only one RHUB is deployed, mark it as RHUB0 on the label. If multiple RHUBs are deployed, mark them in ascending sequence, beginning with RHUB0.
- If only one pRRU is deployed, mark it as pRRU0 on the label. If multiple pRRUs are deployed, mark them in ascending sequence, beginning with pRRU0.
- For details about the maximum number of RHUBs and pRRUs in the DBS3900 LampSite solution, see *Typical Configurations* in *DBS3900 LampSite Technical Description*.

Label Structure

Using the RHUB power label as an example, Figure 15-7 shows the structure of a DBS3900 LampSite engineering label.

Figure 15-7 Label structure

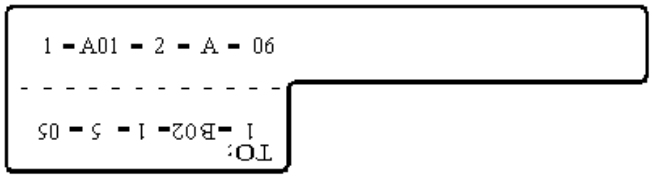

15.4 Attaching an L-Shaped Label

This section describes the procedure and precautions to be taken for attaching an L-shaped label.

Copyright © Huawei Technologies Co., Ltd.

Context

- This section applies to Huawei sign plate labels. If other engineering labels in accordance with local standards are used on site, follow the local standards for attaching sign plate labels.
- In the DBS3900 LampSite solution, blank L-Shaped engineering labels are delivered by default.
- The L-shaped label is usually used for the signal cable, E1/T1 cable, optical cable, and power cable. The description in this section takes the Ethernet cable in a base station as an example.

Procedure

Step 1 Obtain the engineering label to be attached from the whole set of the L-shaped engineering labels, as shown in Figure 15-8.

Figure 15-8 Engineering label to be attached

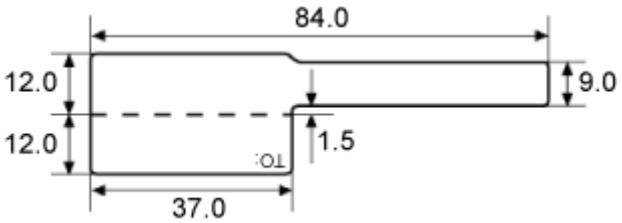

Step 2 Attach the long end of the engineering label to the cable in the position 20 mm away from the connector, and then turn over the long end along the adhesive face. Ensure that the edges of the turned-over engineering label are in a line, as shown in Figure 15-9.

NOTE
By default, the label is attached in the position 20 mm away from the connector. If required, you can change the position to make installation faster and more efficient. Consistency and neatness, however, must be maintained.

Step 3 Adhere the long end to the labeling area. Ensure that the spacing between the cable and the labeling area is 2 mm to 3 mm.

Figure 15-9 Adhering the long end to the labeling area

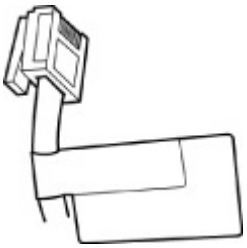

Step 4 Turn over the labeling area along the adhesive face from the bottom, and then finish attaching the engineering label, as shown in Figure 15-10 and Figure 15-11. Ensure that the edges of the turned-over labeling area are in a line.

Copyright © Huawei Technologies Co., Ltd.

Figure 15-10 Turning over the labeling area along the adhesive face

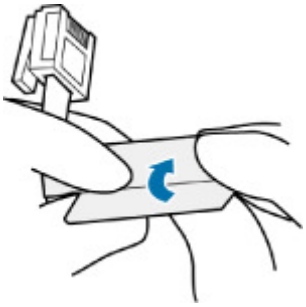

Figure 15-11 Attached engineering label

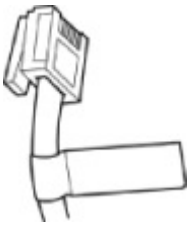

Step 5 Fill in the attached blank label by referring to 15.3 DBS3900 LampSite Engineering Label.

----End

15.5 Attaching a Sign Plate Label

This section describes the procedures and precautions for attaching a sign plate label.

Context

- This section applies to Huawei sign plate labels. If other engineering labels in accordance with local standards are used on site, follow the local standards for attaching sign plate labels.
- A sign plate label is usually used for a power cable, ground label, signal cable, and antenna. This section uses 15.3 DBS3900 LampSite Engineering Label as an example.

Procedure

Step 1 Lead the cable ties through the holes of a label, and then bind the label to the cable, as shown in Figure 15-12. Ensure that the cable ties are led through the holes of the label in the same direction.

Copyright © Huawei Technologies Co., Ltd.

Figure 15-12 Binding the label

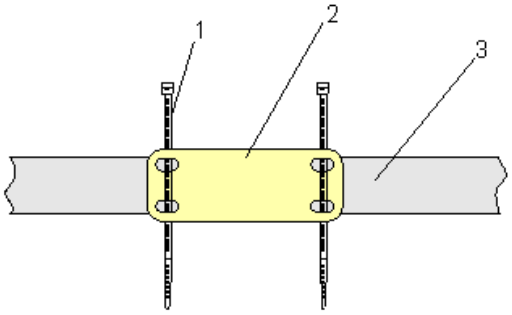

(1): Cable tie (2): Label (3): Cable

NOTE

You should use an outdoor cable tie with a appropriate width in outdoor scenarios (the default is black cable tie with 3.6 mm or 0.14 in. width).

- The position for banding the label is recommended from 20 mm to 100 mm (0.79 in. to 3.94 in.) away from the cable connector. Ensure the front of the label facing you and not be covered.
- In case of both ports of the cable connected have different silkscreen, both ends of the cable should bind the port label on the two ends of cable. For example, in dual BTSs cascading scenarios, one end of the cascading FE/GE cable is connected to **LAN1** port on BTS0, and the other end connected to **WAN** port on BTS1. At this point, both ends of the cable should band two labels **Micro BTS0 LAN1** and **Micro BTS1 WAN**. As shown in Figure 15-13, the distance between the two labels is recommended from 10 mm to 20 mm (0.39 in. to 0.79 in.).

Figure 15-13 Positions for banding labels

NOTE

You may change the positions for attaching labels in actual situations. For example, you can bind a label where the cable is bent.

Step 2 Tighten the cable tie, securing the label on the cable, and then cut off the extra part of the cable tie, as shown in Figure 15-14.

Copyright © Huawei Technologies Co., Ltd.

Figure 15-14 Securing the label on the cable

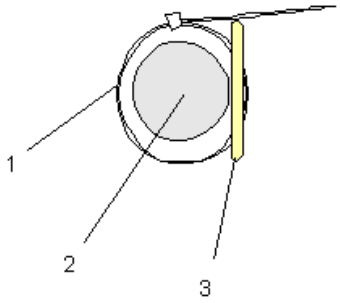

(1): Cable tie (2): Cable (3): Label

NOTE

- When you bind a label, ensure that the side with characters faces outwards.
- Ensure that the labels are attached in an orderly and neat manner. When you cut a cable tie, keep a surplus length of 5 mm to 10 mm (0.20 in. to 0.39 in.).

----End

Copyright © Huawei Technologies Co., Ltd.

Contents

1 Safety Information 2
1.1 General Safety Precautions 2
1.2 Installation Environment Requirements 5
1.2.1 Indoor Installation 6
1.3 Electrical Safety 6
1.4 Radiation Safety 7
1.4.1 Electromagnetic Field Exposure 7
1.5 Mechanical Safety 9
1.6 Maintenance Safety 11

1 Safety Information

1.1 General Safety Precautions

- Read all safety information before installing, operating and maintaining Huawei equipment.
- To ensure personal and equipment safety during installation, operation and maintenance, follow all safety precautions marked on equipment and described in manuals.
- Items marked **Caution**, **Warning** and **Danger** in the manual do not indicate all safety precautions to be obeyed, but only serve as a supplement to all safety precautions.
- The equipment should be used in the environment that meets design specifications. Otherwise, equipment failure may occur, and equipment malfunctions, parts damage, personal safety accidents, property loss and other exceptions resulting from such equipment failure are not within the scope of quality warranty.

Definitions

- **Skilled person:**

  Skilled person is a term applied to persons who have training or experience in the equipment technology, particularly in knowing the various energies and energy magnitudes used in the equipment.
- **Instructed person:**

  Person who have been instructed and trained by a skilled person, or who are supervised by a skilled person, to identify energy sources that may cause pain and to take precautions to avoid unintentional contact with or exposure to those energy sources. Under normal operating conditions, abnormal operating conditions or single fault conditions, instructed persons should not be exposed to parts comprising energy sources capable of causing injury. Understand potential dangers in operations, and can take proper measures to minimize the dangers.
- **User or operator:**

  Ordinary person is the term applied to all persons other than instructed persons and skilled persons. Ordinary persons include not only users of the equipment, but also all persons who may have access to the equipment or who may be in the vicinity of the equipment.

Conventions

- Caution: Caution Symbol, prompts users to be cautious. "Caution" items provide helpful suggestions or reference materials not covered in the document.
- Warning: Warning Symbol, prompts users to be careful. In this situation, users might perform an action that may result in an equipment damage or loss of data.
- Danger: Danger Symbol, indicates critical safety instructions. This warning symbol means a danger. Users are in a situation that could cause bodily injury. Before performing any operation on the equipment, involving electric circuits and understand the standard practices for preventing accidents.
- : High Voltage Symbol, indicates a part exposed to a high voltage. This symbol warns operators that direct contact with the power grid voltage, or indirect contact with the power grid voltage through damp stuff or moisture is fatal. The symbol is attached next to a hazardous voltage point or a protective power supply cover that may be removed during maintenance.
- : Overheating Symbol, indicates overheating. This symbol is attached to equipment surface that may cause scalds due to a high temperature. The symbol warns users not to touch the equipment during operation or maintenance. Heat insulation gloves should be used to prevent scalds.
- : Microwave Symbol, indicates that a device emits microwaves. This symbol warns operators not to unfasten the transmitter output feeder or antenna feeder connector when the transmitter is working. If you need to unfasten the feeder connector or work next to the transmit antenna, turn off the transmitter. The symbol is attached next to the output socket of the transmitter power amplifier or antenna socket of the transmitter combiner to indicate RF radiation.
- or : Protective Earthing Symbol, indicates protection earthing. This symbol is attached next to a protection ground terminal, and used next to a terminal connecting equipment and an external ground system. An equipment ground cable is connected to an external ground bar through the protection ground terminal.
- : Protective bonding Symbol, indicates equipotential bonding. This symbol is used next to equipotential terminals inside equipment.
- : Electrostatic symbol: This symbol is used in all electrostatic sensitive areas. Before operating equipment attached with this symbol, wear ESD gloves or an ESD wrist strap.
-

: Altitude description symbol: This symbol indicates that equipment is safe to use only below the altitude of 2000 m.

- : Non-tropical climate symbol: This symbol indicates that equipment is safe to use only in non-tropical climates.
- : Symbol on/near a fan box/moving part. This symbol is silkscreened on or attached to a fan box panel to warn operators not to touch the fan with fingers. "Do not touch the blades when the fan is rotating!"
- or : Instruction reading symbol. This symbol is attached to remind instruction reading next to an equipment port to notify a user to read the manual for the usage of the port. Application scenarios of this symbol include but are not limited to:

  1. For equipment with multiple power supplies, this symbol is used to replace the multi-power symbol next to power supplies, which indicates that the equipment has multiple power supplies and all the power supplies must be cut off to power off the equipment.

  2. For equipment with multiple input ports, this symbol is used next to the output ports. Read the manual before connection to understand the rated value and configuration information of power output.

  3. For equipment with multiple slots, this symbol is used next to the slots. Read the manual to understand the slot information, board restriction and usage conditions.

Basic Safety Precautions

- Instructed person must obtain related certificates after strict training, understand all the required safety regulations, and master correct operation methods before installing, operating and maintaining Huawei equipment.
- Equipment installation, operation, and maintenance must comply with local laws and regulations. Safety information in the manual only serves as a supplement to local laws and regulations, and:
  - Only skilled person and instructed person can install, operate, and maintain equipment.
  - Only skilled person and instructed person can remove safety facilities and maintenance equipment.
  - Operators should promptly report faults or errors that may cause safety issues.
  - Equipment operators, including operators, instructed person and skilled person, should have special operation qualifications required by the local country, such as high-voltage operation, climbing, and special equipment operation qualifications.
- If personal injury or equipment damage may occur during installation, equipment operators should stop operation immediately, report the situation to the project owner, and take effective protective measures.
- Installation, operation, and maintenance of outdoor equipment are strictly forbidden in lightning, rainy, snowy, windy and other adverse weather conditions. This includes but not limited to outdoor equipment transportation, cabinet installation, power cable installation, and outdoor cable connection.
- Do not wear watches, bracelets, bangles, rings, necklaces or other conductive objects during equipment installation, operation and maintenance.
- Dedicated insulation tools, such as insulation gloves, safety clothing, safety helmet, and safety shoes, must be used during equipment installation, operation, and maintenance, as shown in Figure 1-1.

Figure 1-1 Safety personal protective equipment (PPE)

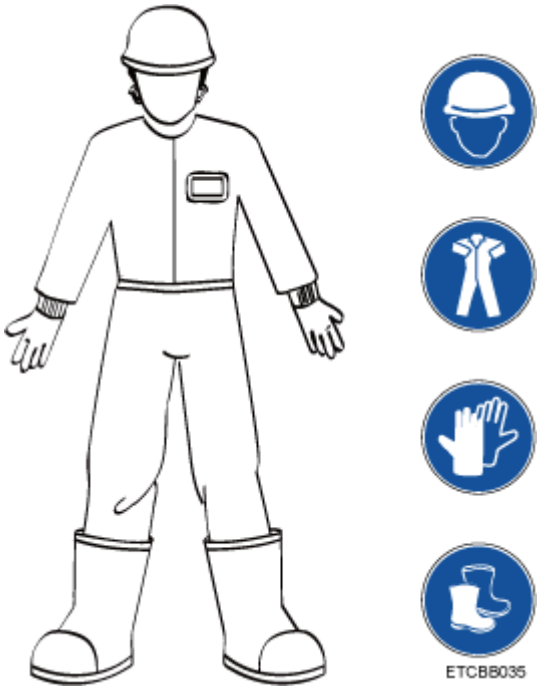

- Equipment installation, operation, and maintenance must follow procedures in the *Hardware Installation and Maintenance Guide*, *Configuration Guide*, and *Operation and Maintenance Guide*.
- Use a voltmeter to measure the voltage at the contact point to prevent electric shocks before touching any metal surface or terminal.
- Ensure all slots are inserted with boards or filler panels. Prevent exposure of board hazardous voltage and energy, ensure normal working of ventilation channels, control electromagnetic interference, and prevent dusts or foreign matters from the backplane, mother board, and boards.
- After equipment installation, users should conduct routine checks and maintenance, and promptly replace faulty parts to ensure equipment safe running as required by the *Hardware Installation and Maintenance Guide* and *Operation and Maintenance Guide*.
- After equipment installation, clear equipment area and remove empty packaging materials, such as the carton box, foam, plastics, and cable ties.
- In case of fire, evacuate from the building or equipment area and press the fire alarm bell, or call the fire emergency number. Do not enter the burning building again in any cases.

1.2 Installation Environment Requirements

- Ensure the installation environment comply with equipment specifications, including the voltage, temperature, humidity, altitude, pollution degree, overvoltage category , and waterproof and dustproof classification.
- Do not place the equipment in a flammable, explosive gas or smog environment, or perform any operation in such environment.
- Keep acidic, alkaline or other corrosive gases away from the installation site.
- Keep the equipment away from sources of heat or fire, such as the electric heater, microwave oven, oven, water heater, fireplace fire, candle or other places that may

generate high temperatures. Otherwise, equipment housing will melt or the equipment will be heated and cause a fire.

- When the equipment is running, do not obscure or cover it with flammables, such as paper and cotton fabrics. Otherwise, heat dissipation of the equipment fails, which will cause housing deformation and a fire.
- The equipment (or system) must be installed and used in specified areas.
- Do not block air vents when the equipment is running. Keep air vents at a distance from the wall or other objects that block the air vents as required in the *Hardware Installation and Maintenance Guide*. The minimum distance is generally 5 cm if it is not specified.
- The equipment that cannot meet IP54 waterproof and dustproof standard cannot be used in outdoor environments.

1.2.1 Indoor Installation

- Ensure there is no water penetration, leakage or condensation (in case of air conditioner failure in the equipment room) on the equipment top. Otherwise, water may flow into the equipment, causing equipment failure.
- If fixed equipment has a large hole at the bottom, the equipment must be installed on concrete, tile or non- combustible surface.
- Prevent rats and pests from the installation site.

Wall Installation

- Before drilling holes on the wall, ensure there is no circuit, water conduit or gas pipeline in the wall area to be drilled to avoid body injury.
- Do not place any flammables or explosive objects above or under the equipment, and do not obscure the equipment with foreign objects within 1 m scope.
- In wall installation mode, ensure no hole facing upwards to prevent water ingress and equipment damage.
- Ensure screws are securely installed. Otherwise, the equipment may fall due to tension after cable connection, causing equipment damage or even personnel injury.

1.3 Electrical Safety

Grounding

- Before grounding, ensure the protection ground is reliably grounded in accordance with local building distribution specifications.
- For the equipment requiring grounding, connect the protective earthing cable essential before equipment installation, and disconnect the protective earthing cable after the equipment is removed.
- For the equipment using a socket with earthing terminal, ensure the earthing terminal is connected to the protective earthing essential.

AC/DC Operation Requirements

Danger

- The supply voltage of the power system is hazardous, and direct contact or indirect contact through damp stuff with the voltage may cause electric shocks.
- Irregular and incorrect operations may cause accidents, such as a fire and electric shocks.

- Before equipment electrical connection, disconnect the related external-equipment breaker.
- Before connecting the load (electrical equipment) or battery cable, verify that the input voltage is within the rated voltage range of the equipment.
- Before power-on, verify that equipment electrical connections are correct.

Cabling Requirements

- If the power cable is prepared at the site, only the insulation layer at the wiring part can be cut. Otherwise, it may cause short circuit and accidents such as body injury and a fire.
- Insulation layer aging or damage may occur when the cable is used in a high-temperature environment. Leave enough distances between the cable and power busbar, current shunt, fuse, heat sink and other heating devices.
- The signal cable and the strong current cable or high-voltage cable must be bound separately.
- Cables provided by the customer must comply with local cable regulations.
- Do not route any cable through the air exhaust vent in the cabinet.
- If cables are stored in an ambient temperature below 0°C, move the cables to a room temperature environment and store the cables for more than 24 hours before installation

ESD Requirements

- To avoid component damage caused by electrostatic on human body, wear ESD gloves or an ESD wrist strap and properly ground the other end of the ESD wrist strap before touching a circuit board.
- Hold the board edge where no components are installed, and do not touch chips with hands.
- Put removed boards in ESD packing for storage or transportation.

1.4 Radiation Safety

1.4.1 Electromagnetic Field Exposure

This section describes safety precautions related to electromagnetic field exposure.

Warning

Strong electromagnetic signals harm human health.

- If the equipment is a radio transmitter or product supporting radio transmission, exposure of radio electromagnetic field (electromagnetic radiation) should be considered.
- For the high-voltage equipment or facility, exposure of power frequency electromagnetic field should be considered.
- When professional equipment or facility (such as wireless base station transceiver) is deployed, the user (such as radio service carrier) must comply with local laws and regulations.
- Before the equipment structure or antenna is modified, re-evaluation of electromagnetic field exposure should be considered.
- Before the radio frequency (RF) output specifications or parameters are modified, re-evaluation of electromagnetic field exposure should be considered.
- Before the site environment of professional equipment or facility is changed, re-evaluation of electromagnetic field exposure should be considered.

Restricted Area of Electromagnetic Field Exposure

An area with excessive electromagnetic field exposure (restricted area) is a hazardous area at a certain distance from the equipment or facility as required by exposure control limits of related regulations, so as to control public or operator exposure to electromagnetic field. Take proper measures to ensure the safe distance from electromagnetic field exposure, including but not limited to:

- Plan the professional equipment or facility site in an inaccessible area to the public, and do not publicize the location.
- Allow only authorized and instructed person to access the professional equipment or facility site.
- Before entering the area with excessive electromagnetic field exposure, professional personnel should know the location of the restricted area and shut down the transmitter.
- Set clear signs at the site to remind professional personnel that the current location is in or may be in the area with excessive electromagnetic field exposure.
- After site installation, conduct regular monitoring and checks.
- Set effective physical shields and apparent warning signs in all areas with excessive electromagnetic field exposure.
- Install an isolating device outside the equipment structure.
- Comply with local regulations in operations.

Installation and Use of a Wireless Base Station Transceiver

A base transceiver station (BTS) is properly designed so that its RF electromagnetic radiation is under the related standard limits of RF radiation hazard. Therefore, a normal working BTS does no harm to the public and working personnel. However, a BTS with defective antenna cables or other defects may result in excessive RF electromagnetic radiation.

Professional personnel should abide by the following rules in BTS installation and operation:

- Before installing and operating a BTS and its antenna, read safety recommendations and comply with local regulations.
- Before installing or maintaining an antenna close to the tower or mast with a BTS and its antenna, contact related personnel to shut down the antenna transmitter.
- If necessary, working personnel at the site should carry radiation monitoring and alarm instrument.

To ensure safety of public electromagnetic field exposure, abide by the following guiding principles in BTS antenna site installation:

- In rooftop installation, install antennas at a height over the height of personnel who may work or live on the rooftop.
- In rooftop installation, install transmit antennas far away from most visited areas, such as the rooftop access point, telephony service point, and HVAC equipment.
- In rooftop installation, install directional antennas peripherally and do not make them face towards buildings.
- Properly choose from large antennas (better signal coverage) and small antennas (less visual impact).
- Install antennas at a far site, although it may be mutually exclusive to local area requirements.
- When constructing a common installation site, pay special attention to antennas from different manufacturers, especially high-power broadcasting (FM/TV) antennas. Antennas are generally installed in one common site locally, which may increase safety risks.
- Take special preventive measures at antenna sites next to hospitals or schools.

Use of Other Wireless Equipment

- If any related equipment manual specifies the safe distance of electromagnetic field exposure, this distance requirement should be applied.
- No application distance is specified for the equipment with low RF transmit power that meets electromagnetic field exposure requirements.
- No application distance is specified for the equipment with special design that meets electromagnetic field exposure requirements in close use.

Use of High-voltage Equipment or Facility

- Only the power frequency electromagnetic field generated by high-voltage (for example, over 100 kV) equipment or facility are harmful to human. Therefore, the electromagnetic field needs to be evaluated according to related requirements.

1.5 Mechanical Safety

Hoisting Safety

Danger

Do not walk under the crane arm or hoisted objects when heavy objects are being hoisted.

- Hoisting operators must be trained and qualified before starting to work.
- Hoisting tools must be check to ensure tool completeness.
- Before hoisting, ensure that hoisting tools are securely fastened to fixed load-bearing objects or wall.
- During hoisting, ensure angles between lifting slings are not larger than 90°, as shown in Figure 1-2.

Figure 1-2 Hoisting heavy objects

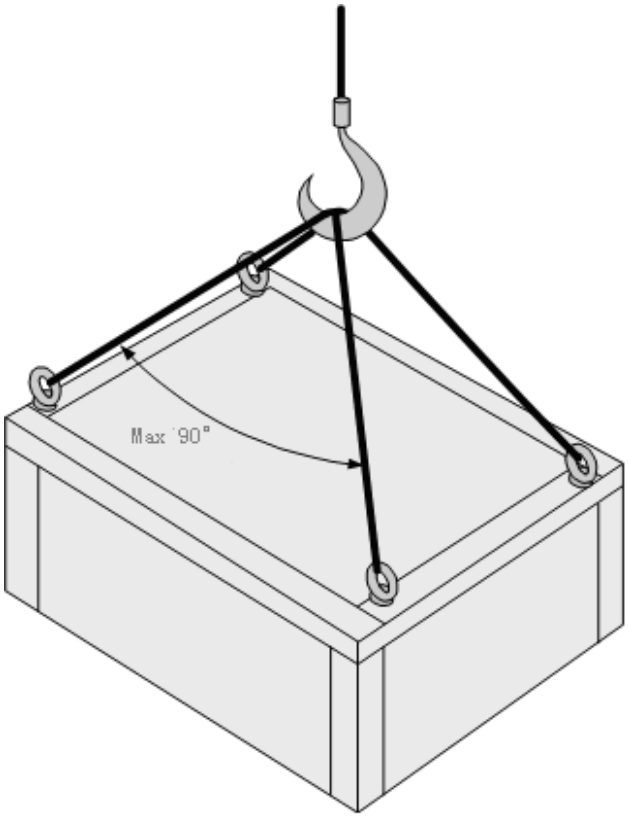

Ladder Use Safety

- Before using a ladder, check whether the ladder is intact and confirm its load bearing capacity. Do not use it with overload.
- The recommended angle between the ladder and the ground is 75°. You can use a right angle to measure the angle, as shown in Figure 1-3. Place the wider ladder legs at the bottom or take protective measures at the bottom to avoid skid. Place the ladder on a stable surface.

Figure 1-3 Ladder tilt angle

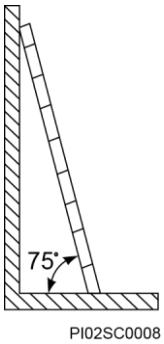

- Pay attention to the following points when climbing a ladder:
  - Prevent your center of gravity from deviating from the ladder edge.
  - Keep your body stable before climbing to ensure safety.
  - Do not climb over the fourth beam from the ladder top.

To climb up to a rooftop, the vertical height of the ladder above the rooftop must be more than 1 m, as shown in Figure 1-4.

Figure 1-4 1 m vertical height of the ladder above the rooftop

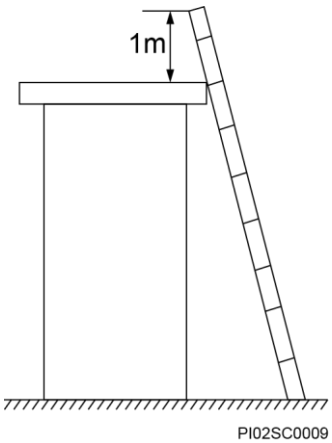

Drilling Safety

Pay attention to the following safety precautions when drilling holes on the wall or ground.

Caution

Do not drill holes on cabinets. Incorrectly drilled holes will damage cabinet electromagnetic shielding performance and internal cables. Metal scraps generated in drilling will cause short circuit on circuit boards in a cabinet.

- Wear goggles and protective gloves in drilling.
- Cover equipment before drilling to prevent metal scraps from entering equipment interior. Timely clear and eliminate metal scraps after drilling.

Heavy Object Transport Safety

- Prepare for load bearing in heavy object transport to avoid injury or sprain. When transporting a cabinet, keep your back straight and move steadily to avoid sprain.
- When transporting equipment with hands, wear protective gloves to avoid cut by edges.
- When moving or lifting a shelf, hold shelf handles or bottom edge, instead of handles of installed models in the cabinet, such as power modules, fan modules and boards.

1.6 Maintenance Safety

- Before replacing accessories or parts, wear an ESD wrist strap, and ensure the other end of the ESD wrist strap is grounded and the other end is properly contacted with skin.
- When replacing parts, take care of parts, bolts, and tools to prevent them from dropping into fans can damaging fans or equipment.
- When replacing shelves or parts in the cabinet, carefully pull the shelves or parts out from the cabinet to prevent unstable or heavy devices on the cabinet from causing injury or strain.

Replaceable Fuse

Warning

Use fuses of the same type and same rating to replace old ones.

Before replacing the fuse on the panel, disconnect the equipment power supply. Otherwise, an energy hazard or electric shock may occur, causing body injury.

- Replaceable fuses are installed on the panel next to the AC/DC power input port or output port.
- Reference the specifications of backup fuses or fuses on the panel to select the fuse type for replacement. Using different fuses of different specifications may cause equipment damage, body injury, and financial loss.

Fuse Welding

- If the fuse rated value is silkscreened on the board, Huawei authorized personnel replace fuses according the silkscreened specifications.
- If the fuse rated value is not silkscreened on the board, do not maintain board fuses at site. Return them for depot repair. To replace fuses, Huawei authorized personnel replace the fuses according to the supplier model and rated value in the bill of materials (BOM).

1. USA Regulatory Compliance

1.1 FCC Part 15

This device complies with Part 15 of the FCC Rules. Operation is subject to the following two conditions:

- This device does not cause harmful interference.
- This device must accept any interference received, including interference that may cause undesired operation.

If this device is modified without authorization from Huawei, the device may no longer comply with FCC requirements for Class B digital devices. In that a case, your right to use the device may be limited by FCC regulations. Moreover, you may be required to correct any interference to radio or television communications at your own expense.

This device has been tested and found to comply with the limits for a Class B digital device, pursuant to Part 15 of the FCC rules. These limits are designed to provide reasonable protection against harmful interference in a residential installation.

This device generates, uses and radiates radio frequency energy. If it is not installed and used in accordance with the instructions, it may cause harmful interference to radio communications.

However, there is no guarantee that interference will not occur in a particular installation. If this device does cause harmful interference to radio or television reception, which can be determined by turning the device off and on, the user may take one or more of the following measures:

- Reorient or relocate the receiving antenna.
- Reinforce the separation between the device and receiver.
- Connect the device into an outlet on a circuit different from that to which the receiver is connected.
- Consult the dealer or an experienced radio or TV technician for assistance.

1.2. Warning

This equipment complies with FCC radiation exposure limits set forth for an uncontrolled environment .This equipment should be installed and operated with minimum distance 35cm between the radiator& your body.

This transmitter must not be co-located or operating in conjunction with any other antenna or transmitter.

Copyright © Huawei Technologies Co., Ltd.

2. Canada Regulatory Compliance

2.1 RSS-Gen statement

This device complies with Industry Canada licence-exempt RSS standard(s).

Operation is subject to the following two conditions: (1) this device may not cause interference, and (2) this device must accept any interference, including interference that may cause undesired operation of the device.

Le présent appareil est conforme aux CNR d'Industrie Canada applicables aux appareils radio exempts de licence. L'exploitation est autorisée aux deux conditions suivantes : (1) l'appareil ne doit pas produire de brouillage, et (2) l'utilisateur de l'appareil doit accepter tout brouillage radioélectrique subi, même si le brouillage est susceptible d'en compromettre le fonctionnement.

2.2 RSS statement:

This device complies with Industry Canada RSS . Operation is subject to the following two conditions: (1) this device may not cause interference, and(2) this device must accept any interference, including interference that may cause undesired operation of the device.

Le présent appareil est conforme aux CNR d'Industrie Canada applicables aux appareils radio RSS. L'exploitation est autoris ée aux deux conditions suivantes : (1) l'appareil ne doit pas produire de brouillage, et (2) l'utilisateur de l'appareil doit accepter tout brouillage radioé lectrique subi, même si le brouillage est susceptible d'en compromettre le fonctionnement.

2.3. Warning

This equipment complies with IC RF radiation exposure limits set forth for an uncontrolled environment. This transmitter must not be co-located or operating in conjunction with any other antenna or transmitter. This equipment should be installed and operated with minimum distance 35cm between the radiator& your body.

Cet appareil est

conforme aux limitesd'exposition de rayonnement RF IC établiespour un environnement non contrôlé.

Cetémetteur ne doit pas être co-implanté oufonctionner en conjonction avec toute autreantenne ou trans

metteur.

Cet équipement doit être installé et utiliséavec une distance minimale de 35cm entre leradiateur

& votre corps.

3. Other Markets

For relevant compliance information/documentation for markets not mentioned above, please contact Huawei representative.

Copyright © Huawei Technologies Co., Ltd.