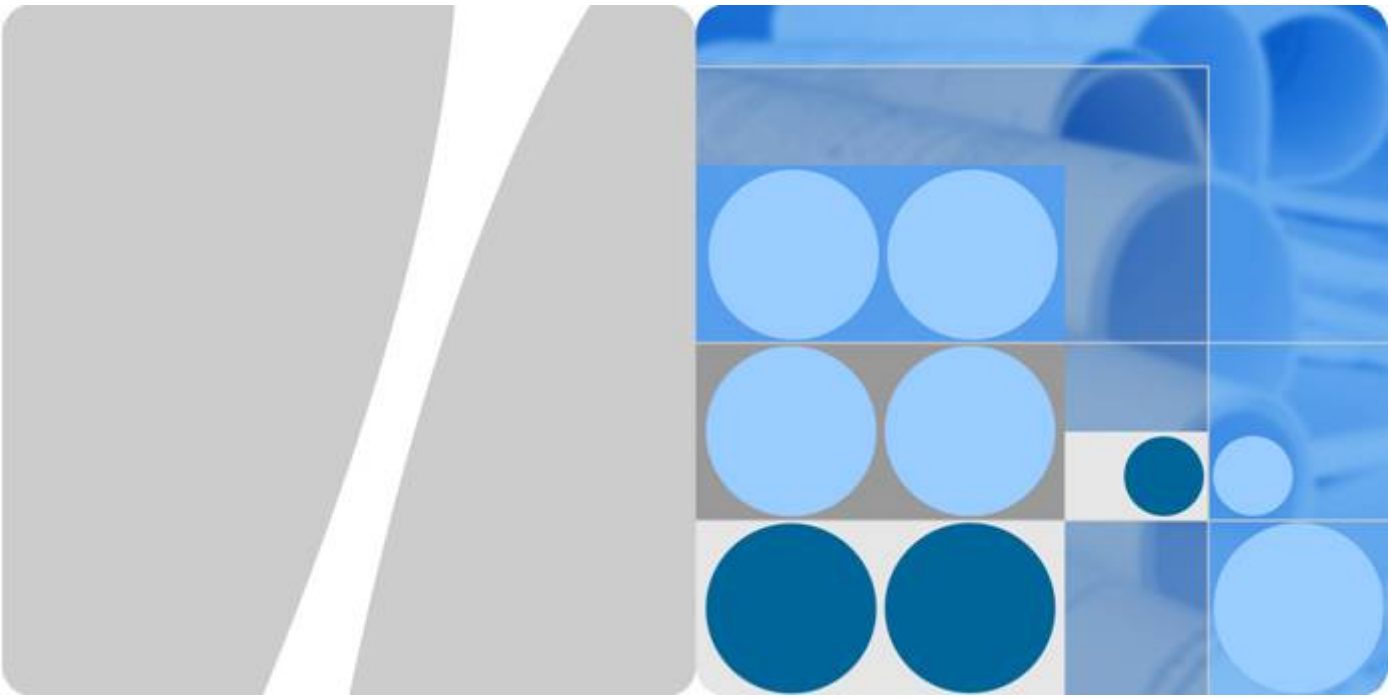

RRU3249

Installation Guide

Issue DraftA

Date 2015-05-30

HUAWEI TECHNOLOGIES CO., LTD.

Copyright © Huawei Technologies Co., Ltd. 2015. All rights reserved.

No part of this document may be reproduced or transmitted in any form or by any means without prior written consent of Huawei Technologies Co., Ltd.

Trademarks and Permissions

HUAWEI and other Huawei trademarks are trademarks of Huawei Technologies Co., Ltd.
All other trademarks and trade names mentioned in this document are the property of their respective holders.

Notice

The purchased products, services and features are stipulated by the contract made between Huawei and the customer. All or part of the products, services and features described in this document may not be within the purchase scope or the usage scope. Unless otherwise specified in the contract, all statements, information, and recommendations in this document are provided "AS IS" without warranties, guarantees or representations of any kind, either express or implied.

The information in this document is subject to change without notice. Every effort has been made in the preparation of this document to ensure accuracy of the contents, but all statements, information, and recommendations in this document do not constitute a warranty of any kind, express or implied.

Huawei Technologies Co., Ltd.

Address: Huawei Industrial Base
Bantian, Longgang
Shenzhen 518129
People's Republic of China

Website: http://www.huawei.com

Email: support@huawei.com

About This Document

Purpose

This document describes the process of installing a DC blade RRU3249 (referred to as RRU in this document).

Product Version

The following table lists the product version related to this document.

Product Name	Solution Version	Product Version
DBS3900	● SRAN8.0 and later versions ● eRAN6.0 and later versions	V100R008C00 and later versions

Intended Audience

This document is intended for:

Base station installation engineers

Organization

1 Changes in the RRU3249 Installation Guide

This chapter describes the changes in the *RRU3249 Installation Guide*.

2 Installation Preparations

This chapter describes the reference documents, tools, and instruments that must be ready before the installation. In addition, it specifies the skills and prerequisites that installation engineers must have.

3 Information About the Installation

Before installing an RRU, you must be familiar with its exterior, ports, indicators, installation options and installation clearance requirements.

Copyright © Huawei Technologies Co., Ltd.

4 Unpacking the Equipment

This chapter describes how to unpack and check the delivered equipment to ensure that all the materials are included and intact.

5 Installation Process

The installation process involves installing an RRU and RRU cables, checking the RRU hardware installation, and powering on the RRU.

6 Installing the RRU

This chapter describes the procedure for installing the RRU. The procedure for installing the RRU varies depending on installation options.

7 Installing RRU Cables

This chapter describes the procedure for installing RRU cables.

8 Checking the RRU Hardware Installation

After an RRU is installed, check the hardware installation.

9 Powering On an RRU

After all the devices are installed, check the power-on status of an RRU.

10 Appendix

Conventions

Symbol Conventions

The symbols that may be found in this document are defined as follows.

Symbol	Description
DANGER	Indicates an imminently hazardous situation which, if not avoided, will result in death or serious injury.
WARNING	Indicates a potentially hazardous situation which, if not avoided, could result in death or serious injury.
CAUTION	Indicates a potentially hazardous situation which, if not avoided, may result in minor or moderate injury.
NOTICE	Indicates a potentially hazardous situation which, if not avoided, could result in equipment damage, data loss, performance deterioration, or unanticipated results. NOTICE is used to address practices not related to personal injury.

Copyright © Huawei Technologies Co., Ltd.

Symbol	Description
NOTE	Calls attention to important information, best practices and tips. NOTE is used to address information not related to personal injury, equipment damage, and environment deterioration.

General Conventions

The general conventions that may be found in this document are defined as follows.

Convention	Description
Times New Roman	Normal paragraphs are in Times New Roman.
Boldface	Names of files, directories, folders, and users are in **boldface**. For example, log in as user **root**.
Italic	Book titles are in *italics*.
`Courier New`	Examples of information displayed on the screen are in Courier New.

Command Conventions

The command conventions that may be found in this document are defined as follows.

Convention	Description
Boldface	The keywords of a command line are in **boldface**.
Italic	Command arguments are in *italics*.
[ ]	Items (keywords or arguments) in brackets [ ] are optional.
{ x | y | ... }	Optional items are grouped in braces and separated by vertical bars. One item is selected.
[x | y | ...]	Optional items are grouped in brackets and separated by vertical bars. One item is selected or no item is selected.
{ x | y | ... }*	Optional items are grouped in braces and separated by vertical bars. A minimum of one item or a maximum of all items can be selected.
[x | y | ...]*	Optional items are grouped in brackets and separated by vertical bars. Several items or no item can be selected.

GUI Conventions

Copyright © Huawei Technologies Co., Ltd.

The GUI conventions that may be found in this document are defined as follows.

Convention	Description
Boldface	Buttons, menus, parameters, tabs, window, and dialog titles are in **boldface**. For example, click **OK**.
>	Multi-level menus are in **boldface** and separated by the ">" signs. For example, choose **File** > **Create** > **Folder**.

Keyboard Operations

The keyboard operations that may be found in this document are defined as follows.

Format	Description
Key	Press the key. For example, press **Enter** and press **Tab**.
Key 1+**Key 2**	Press the keys concurrently. For example, pressing **Ctrl**+**Alt** +**A** means the three keys should be pressed concurrently.
Key 1, **Key 2**	Press the keys in turn. For example, pressing **Alt**, **A** means the two keys should be pressed in turn.

Mouse Operations

The mouse operations that may be found in this document are defined as follows.

Action	Description
Click	Select and release the primary mouse button without moving the pointer.
Double-click	Press the primary mouse button twice continuously and quickly without moving the pointer.
Drag	Press and hold the primary mouse button and move the pointer to a certain position.

Copyright © Huawei Technologies Co., Ltd.

Contents

About This Document....ii
1 Changes in the RRU3249 Installation Guide....1
2 Installation Preparations....2
2.1 Reference Documents....3
2.2 Tools and Instruments....3
2.3 Skills and Requirements for Onsite Personnel....5
3 Information About the Installation....6
3.1 RRU Exterior....7
3.2 RRU Ports....8
3.3 RRU Indicators....10
3.4 Installation Options....12
3.5 Installation Clearance Requirements of an RRU....14
3.5.1 Installation Clearance for Multiple RRUs....14
3.5.2 Installation Spacing Between RRUs....16
4 Unpacking the Equipment....17
5 Installation Process....19
6 Installing the RRU....21
6.1 Mounting Kits for an RRU....22
6.2 Installing the RRU on a Pole....22
6.3 Installing the RRU on a Tower....26
7 Installing RRU Cables....32
7.1 Cabling Requirements....34
7.2 RRU Cable Connections....40
7.3 Installing RRU Cables....42
7.4 RRU Cables....43
7.5 Installing an RRU PGND Cable....44
7.6 Installing an RRU RF Jumper....46
7.7 Installing an RRU AISG Multi-Wire Cable and AISG Extension Cable....49
7.8 Installing an RRU Alarm Cable....51
7.9 Opening the Cover Plate of an RRU Cabling Cavity....53

Copyright © Huawei Technologies Co., Ltd.

7.10 Installing a CPRI Optical Cable....54
7.11 Installing an RRU Power Cable....56
7.12 Closing the Cover Plate of an RRU Cabling Cavity....58
8 Checking the RRU Hardware Installation....62
9 Powering On an RRU....63
10 Appendix....65
10.1 Adding a Tool-Less Female Connector (Pressfit Type) to the RRU Power Cable on the RRU Side....66

Copyright © Huawei Technologies Co., Ltd.

1 Changes in the RRU3249 Installation Guide

This chapter describes the changes in the *RRU3249 Installation Guide*.

Draft A (2015-05-30)

This is a draft.

Copyright © Huawei Technologies Co., Ltd.

2 Installation Preparations

About This Chapter

This chapter describes the reference documents, tools, and instruments that must be ready before the installation. In addition, it specifies the skills and prerequisites that installation engineers must have.

2.1 Reference Documents
Before the installation, you must be familiar with reference documents.

2.2 Tools and Instruments
You must prepare the following tools and instruments before the installation.

2.3 Skills and Requirements for Onsite Personnel
Onsite personnel must be qualified and trained. Before performing any operation, onsite personnel must be familiar with correct operation methods and safety precautions.

Copyright © Huawei Technologies Co., Ltd.

2.1 Reference Documents

Before the installation, you must be familiar with reference documents.

The following reference documents are required during RRU installation:

- RRU3249 Hardware Description
- DBS3900 Installation Guide
- OCB User Guide
- OCB-01M User Guide

2.2 Tools and Instruments

You must prepare the following tools and instruments before the installation.

Hammer drill (a φ12 bit) 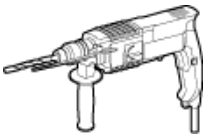	ESD gloves 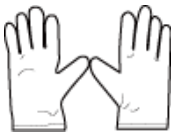	Vacuum cleaner
Heat gun	Phillips screwdriver (M3 to M6)	Flat-head screwdriver (M3 to M6)
Rubber mallet	COAX crimping tool	Wire stripper 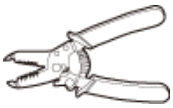

Copyright © Huawei Technologies Co., Ltd.

Utility knife 	Cable cutter 	Adjustable wrench (size ⩾ 32 mm [1.26 in.]) Torque wrench Size: 18 mm (0.71 in.) and 32 mm (1.26 in.) Combination wrench Size: 18 mm (0.71 in.) and 32 mm (1.26 in.)
Level 	Torque screwdriver 5 mm 5 mm (M3 to M6) 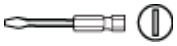 (M3 to M6)	Torque socket 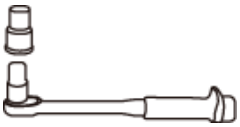
Multimeter 	Marker (diameter ⩽ 10 mm [0.39 in.]) 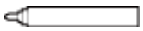	Measuring tape
Inner hexagon wrench 5 mm	Fixed pulley 	Lifting sling
Hydraulic pliers 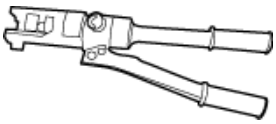	-	-

Copyright © Huawei Technologies Co., Ltd.

2.3 Skills and Requirements for Onsite Personnel

Onsite personnel must be qualified and trained. Before performing any operation, onsite personnel must be familiar with correct operation methods and safety precautions.

Before the installation, pay attention to the following items:

- The customer's technical engineers must be trained by Huawei and be familiar with the proper installation and operation methods.
- The number of onsite personnel depends on the engineering schedule and installation environment. Generally, only three to five onsite personnel are necessary.

Copyright © Huawei Technologies Co., Ltd.

3 Information About the Installation

About This Chapter

Before installing an RRU, you must be familiar with its exterior, ports, indicators, installation options and installation clearance requirements.

3.1 RRU Exterior
This section describes the exterior and dimensions of an RRU.

3.2 RRU Ports
This section describes ports on the RRU panels. An RRU has a bottom panel, cabling cavity panel, and indicator panel.

3.3 RRU Indicators
This section describes six indicators on an RRU. They indicate the running status of the RRU.

3.4 Installation Options
This section describes RRU installation options. RRU installation supports the centralized mode.

3.5 Installation Clearance Requirements of an RRU
This section describes the requirements for the installation clearance of multiple RRUs and the requirements for the installation spacing between RRUs.

Copyright © Huawei Technologies Co., Ltd.

3.1 RRU Exterior

This section describes the exterior and dimensions of an RRU.

Figure 3-1 shows the exterior of an RRU.

Figure 3-1 RRU exterior

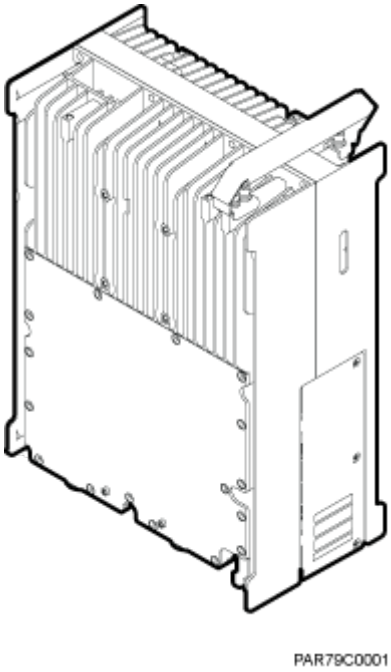

Figure 3-2 shows RRU dimensions.

Figure 3-2 RRU dimensions

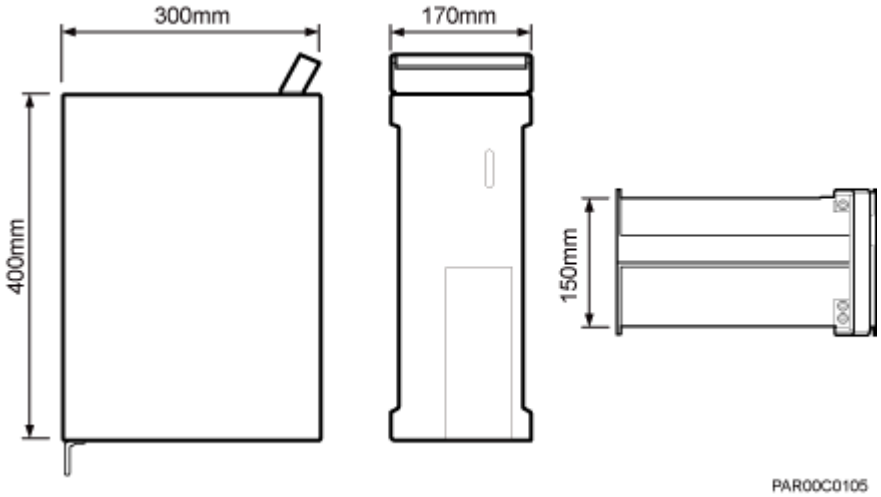

Copyright © Huawei Technologies Co., Ltd.

You can obtain the RRU frequency band and power supply information from the configuration label on the cover plate and obtain the RRU name from the nameplate on the side of RRU that accommodates the conversion bracket. **Figure 3-3** shows the positions of the configuration label and nameplate on the RRU.

NOTE

The actual label and nameplate may differ from what is shown in the figure.

Figure 3-3 Positions of the label and nameplate

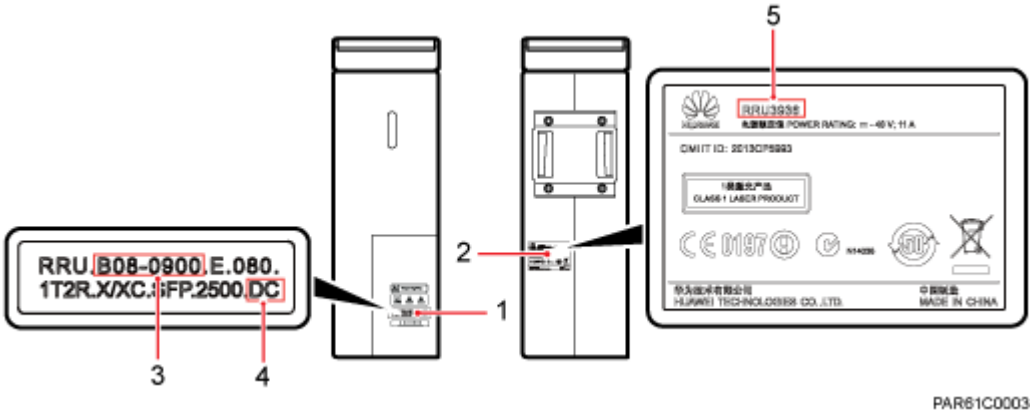

(1) Configuration label	(2) Nameplate	(3) Frequency band
(4) Power supply module	(5) Module name	-

3.2 RRU Ports

This section describes ports on the RRU panels. An RRU has a bottom panel, cabling cavity panel, and indicator panel.

Figure 3-4 shows the ports on the RRU panels.

Copyright © Huawei Technologies Co., Ltd.

Figure 3-4 Ports on the RRU panels

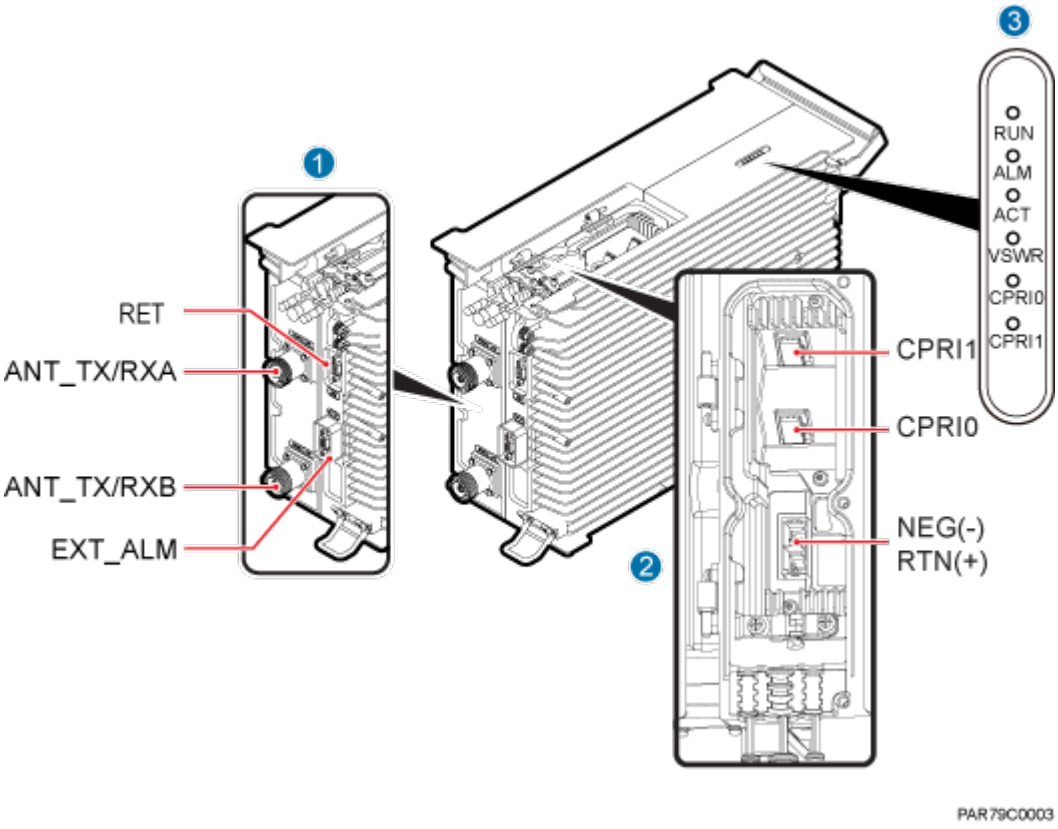

Table 3-1 describes ports and indicators on the RRU panels.

Table 3-1 Ports and indicators on the RRU panels

Item	Silkscreen	Remarks
(1) Bottom ports	ANT_TX/RXA	TX/RX port A, supporting RET signal transmission
	ANT_TX/RXB	TX/RX port B, supporting RET signal transmission
	EXT_ALM	Alarm monitoring port used for monitoring one RS485 signal and two dry contact signals
	RET	Communication port for the RET antenna, supporting RET signal transmission
(2) Ports in the cabling cavity	RTN(+)	Power supply socket, for details about RRU power cable experience and specifications, see RRU Power Cable.
	NEG(-)	
	CPRI0	Optical/electrical port 0, connected to the BBU

Copyright © Huawei Technologies Co., Ltd.

Item	Silkscreen	Remarks
	CPRI1	Optical/electrical port 1, connected to the BBU
(3) Indicator	RUN	For details, see **3.3 RRU Indicators**.
	ALM	
	ACT	
	VSWR	
	CPRI0	
	CPRI1	

NOTE

- The port for transmitting RET signals is determined by the software.
- Connect the **CPRI0** port to the BBU by default in the single-mode scenario.

3.3 RRU Indicators

This section describes six indicators on an RRU. They indicate the running status of the RRU.

For detailed positions of RRU indicators, see **3.2 RRU Ports**.

Table 3-2 describes RRU indicators.

Table 3-2 RRU Indicators

Indicator	Color	Status	Meaning
RUN	Green	Steady on	The power input is available, but the board is faulty.
		Steady off	No power input is available or the board is faulty.
		Blinking (on for 1s and off for 1s)	The board is running properly.
		Blinking (on for 0.125s and off for 0.125s)	The board software is being loaded or the board is not working.
ALM	Red	Steady on	Alarms are generated, and the module must be replaced.

Copyright © Huawei Technologies Co., Ltd.

Indicator	Color	Status	Meaning
		Blinking (on for 1s and off for 1s)	Alarms are generated. The alarms may be caused by faults on the related board or ports. Therefore, you need to locate the fault before deciding whether to replace the module.
		Steady off	No alarms are generated.
ACT	Green	Steady on	The board is working properly when TX channels are enabled or software is being loaded to a board that is not started.
		Blinking (on for 1s and off for 1s)	The board is running with TX channels disabled.
VSWR	Red	Steady off	No voltage standing wave ratio (VSWR) alarm is generated.
		Blinking (on for 1s and off for 1s)	VSWR alarms are generated on the **ANT_TX/RXB** port.
		Steady on	VSWR alarms are generated on the **ANT_TX/RXA** port.
		Blinking (on for 0.125s and off for 0.125s)	VSWR alarms are generated on the **ANT_TX/RXA** and **ANT_TX/RXB** ports.
CPRI0	Red and green	Steady green	The CPRI link is running properly.
		Steady red	An optical module fails to receive or transmit signals possibly because the optical module is faulty or the optical fiber is broken.
		Blinking red (on for 1s and off for 1s)	The CPRI link is out of lock because of faults on the mutual lock of dual-mode clock sources or mismatched data rates on CPRI ports.
		Steady off	The optical module cannot be detected or is powered off.
CPRI1	Red and green	Steady green	The CPRI link is running properly.
		Steady red	An optical module fails to receive or transmit signals possibly because the optical module is faulty or the optical fiber is broken.
		Blinking red (on for 1s and off for 1s)	The CPRI link is out of lock because of faults on the mutual lock of dual-mode clock sources or mismatched data rates on CPRI ports.
		Steady off	The optical module cannot be detected or is powered off.

Copyright © Huawei Technologies Co., Ltd.

3.4 Installation Options

This section describes RRU installation options. RRU installation supports the centralized mode.

Figure 3-5 shows the diameter of a pole for installing an RRU.

Figure 3-5 Diameter of a pole

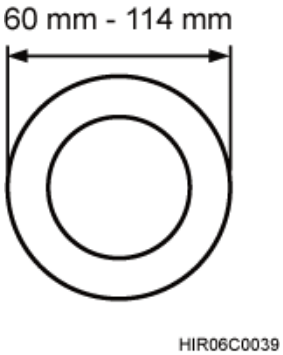

NOTICE

- The diameter of a pole for installing an RRU ranges from 60 mm (2.36 in.) to 114 mm (4.49 in.). The recommended diameter is 80 mm (3.15 in.).
- When the diameter of a pole ranges from 60 mm (2.36 in.) to 76 mm (2.99 in.), a maximum of three RRUs can be installed on the pole and the side-mounted installation is recommended.
- Only a pole whose diameter ranges from 76 mm (2.99 in.) to 114 mm (4.49 in.) supports more than three RRUs.
- The recommended thickness of the pole wall is 3.5 mm (0.14 in.) or above.

Figure 3-6 shows two RRUs installed in centralized mode.

Figure 3-7 shows three RRUs installed in centralized mode.

Copyright © Huawei Technologies Co., Ltd.

Figure 3-6 Two RRUs installed in centralized mode

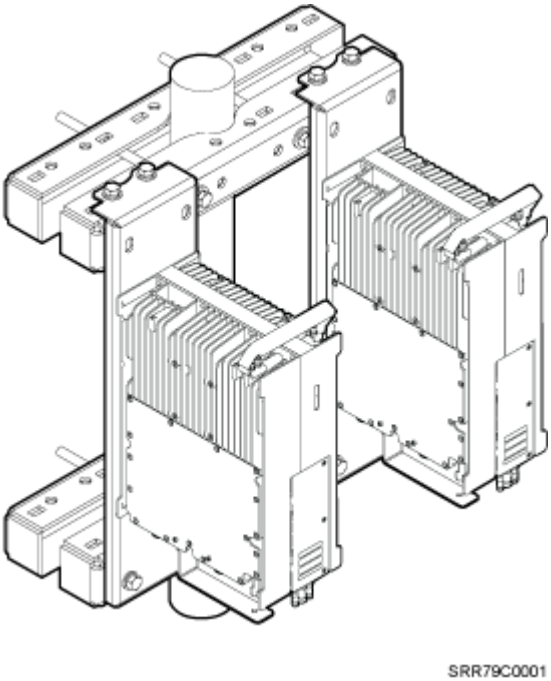

Figure 3-7 Three RRUs installed in centralized mode

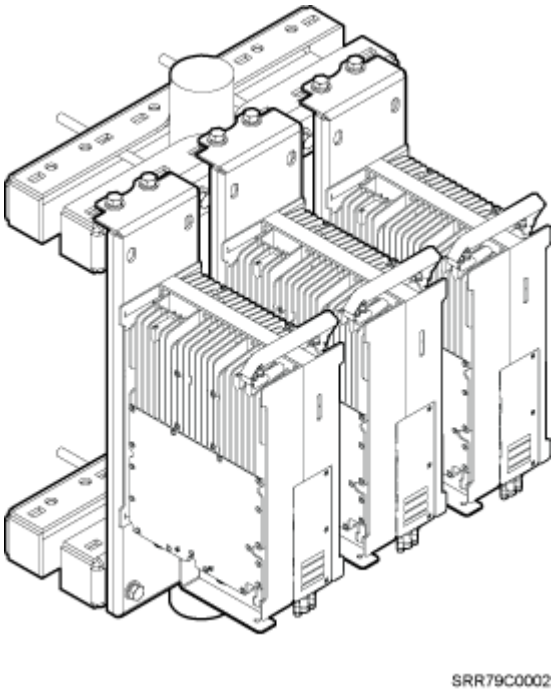

Figure 3-8 shows four RRUs installed in centralized mode.

Copyright © Huawei Technologies Co., Ltd.

Figure 3-8 Four RRUs installed in centralized mode

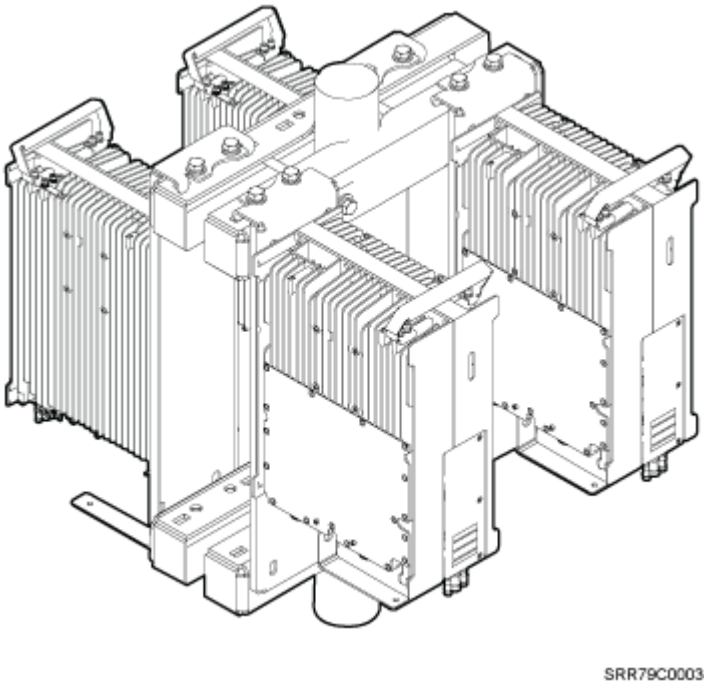

NOTE

For details about how to install RRUs on an IFS06, see *DBS3900 (ICR) Installation Guide*.

3.5 Installation Clearance Requirements of an RRU

This section describes the requirements for the installation clearance of multiple RRUs and the requirements for the installation spacing between RRUs.

3.5.1 Installation Clearance for Multiple RRUs

This section describes the recommended and minimum installation clearance for multiple RRUs.

Recommended Installation Clearance for Multiple RRUs Installed in Centralized Mode

Figure 3-9 shows the recommended installation clearance for multiple RRUs installed in centralized mode.

Copyright © Huawei Technologies Co., Ltd.

Figure 3-9 Recommended installation clearance for multiple RRUs installed in centralized mode

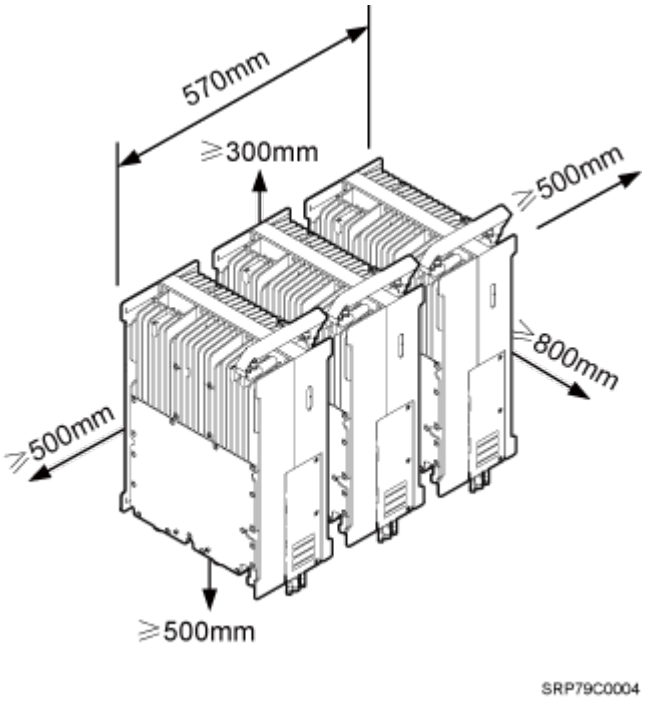

Minimum Installation Clearance for Multiple RRUs Installed in Centralized Mode

Figure 3-10 shows the minimum installation clearance for multiple RRUs installed in centralized mode.

Figure 3-10 Minimum installation clearance for multiple RRUs installed in centralized mode

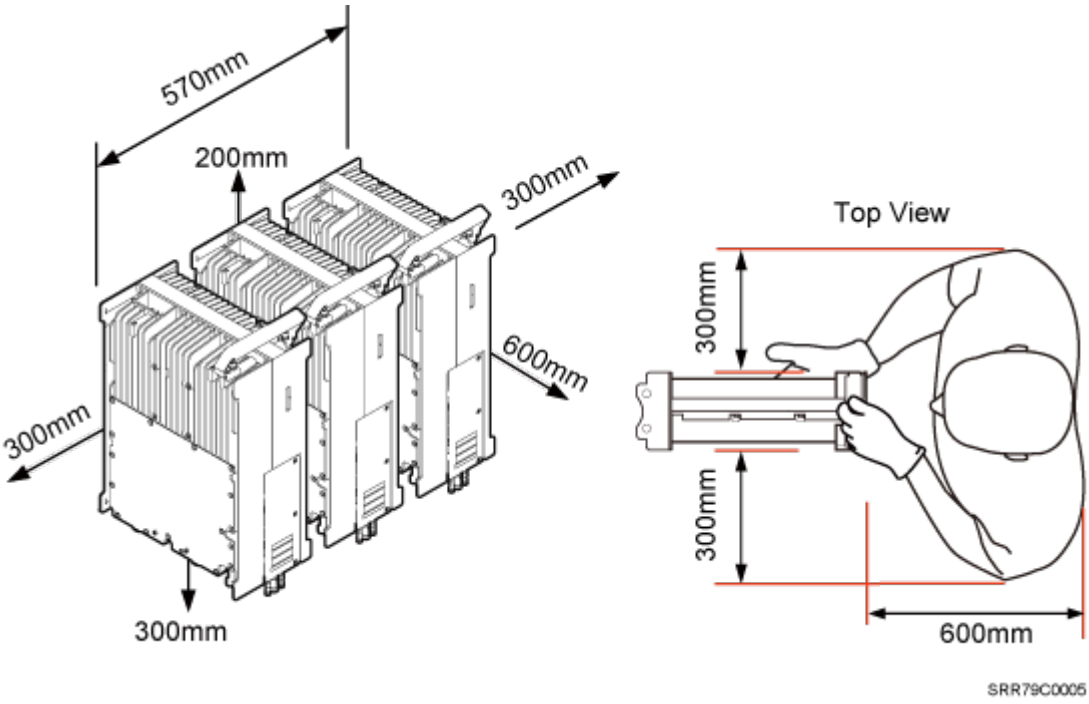

Copyright © Huawei Technologies Co., Ltd.

3.5.2 Installation Spacing Between RRUs

This section describes the horizontal and vertical spacing between RRUs.

Figure 3-11 shows the recommended horizontal spacing between RRUs.

Figure 3-11 Recommended horizontal spacing between RRUs

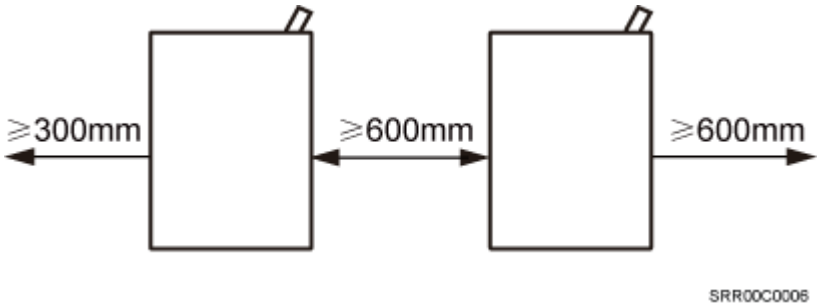

Figure 3-12 shows the recommended vertical spacing between RRUs.

Figure 3-12 Recommended vertical spacing between RRUs

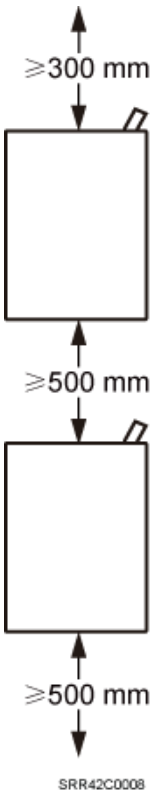

Copyright © Huawei Technologies Co., Ltd.

4 Unpacking the Equipment

This chapter describes how to unpack and check the delivered equipment to ensure that all the materials are included and intact.

Context

NOTE

When transporting, moving, or installing the equipment, components, or parts, you must:

- Prevent them from colliding with doors, walls, shelves, or other objects.
- Wear clean gloves, and avoid touching the equipment, components, or parts with bare hands, sweat-soaked gloves, or dirty gloves.

NOTICE

- After a cabinet or an BBU is unpacked, it must be powered on within 7 days.
- After an RRU is unpacked, it must be powered on within 24 hours.

Procedure

Step 1 Check the total number of articles in each case according to the packing list.

If ...	Then ...
The total number tallies with the packing list	Go to **Step 2**.
The total number does not tally with the packing list	Find out the cause and report any missing articles to the local Huawei office.

Step 2 Check the exterior of the packing case.

Copyright © Huawei Technologies Co., Ltd.

If ...	Then ...
The outer packing is intact	Go to **Step 3**.
The outer packing is severely damaged or soaked	Find out the cause and report it to the local Huawei office.

Step 3 Check the type and quantity of the equipment in the cases according to the packing list.

If ...	Then ...
Types and quantity of the article tally with those on the packing list	Sign the *Packing List* with the customer.
Either shipment shortage, wrong shipment or damaged articles.	Report to the local Huawei office.

CAUTION

- To protect the equipment and prevent damage to the equipment, you are advised to keep the unpacked equipment and packing materials indoors, take photos of the stocking environment, packing case or carton, packing materials, and any rusted or eroded equipment, and then file the photos.
- Verify that the insulation layers of all RRU cables are intact. If the insulation layers are damaged or broken, water will penetrate into the cables, which may cause damages to RRUs or human injury.

----End

Copyright © Huawei Technologies Co., Ltd.

5 Installation Process

The installation process involves installing an RRU and RRU cables, checking the RRU hardware installation, and powering on the RRU.

Figure 5-1 shows the process of installing an RRU.

Copyright © Huawei Technologies Co., Ltd.

Figure 5-1 Process of installing an RRU

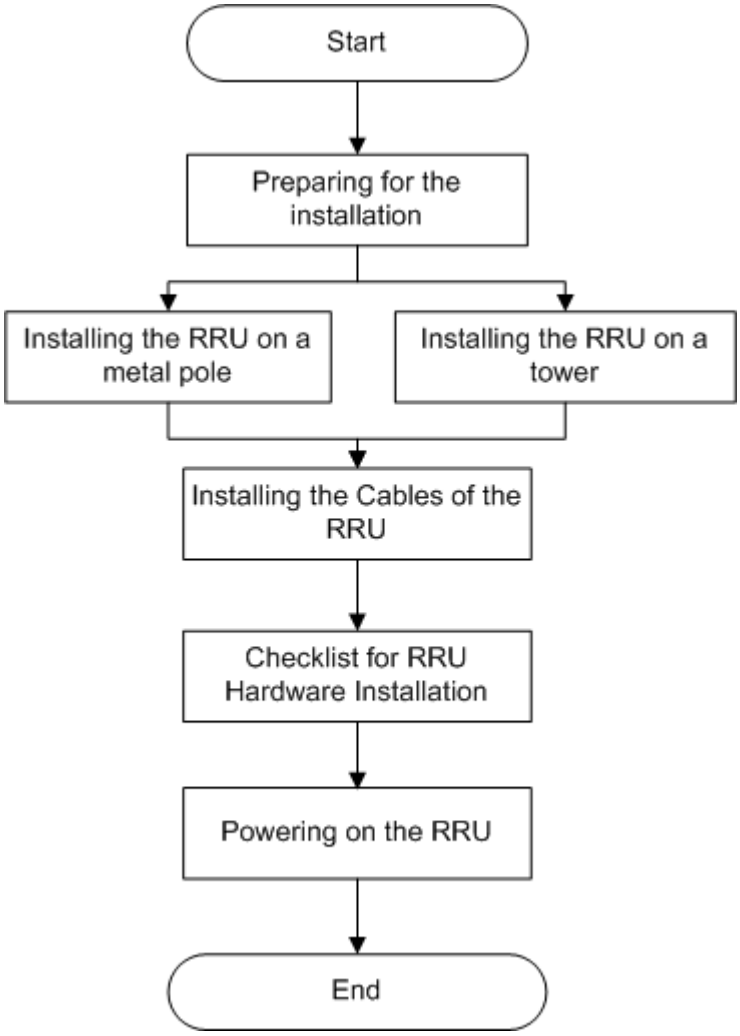

Copyright © Huawei Technologies Co., Ltd.

6 Installing the RRU

About This Chapter

This chapter describes the procedure for installing the RRU. The procedure for installing the RRU varies depending on installation options.

6.1 Mounting Kits for an RRU
This section describes the mounting kits for an RRU in centralized mode.

6.2 Installing the RRU on a Pole
This section describes the procedure for installing the RRU on a pole in centralized mode.

6.3 Installing the RRU on a Tower
This section describes the procedure for installing the RRU on a tower in centralized mode.

Copyright © Huawei Technologies Co., Ltd.

6.1 Mounting Kits for an RRU

This section describes the mounting kits for an RRU in centralized mode.

Figure 6-1 shows the mounting kits for an RRU in centralized mode.

Figure 6-1 Mounting kits for an RRU

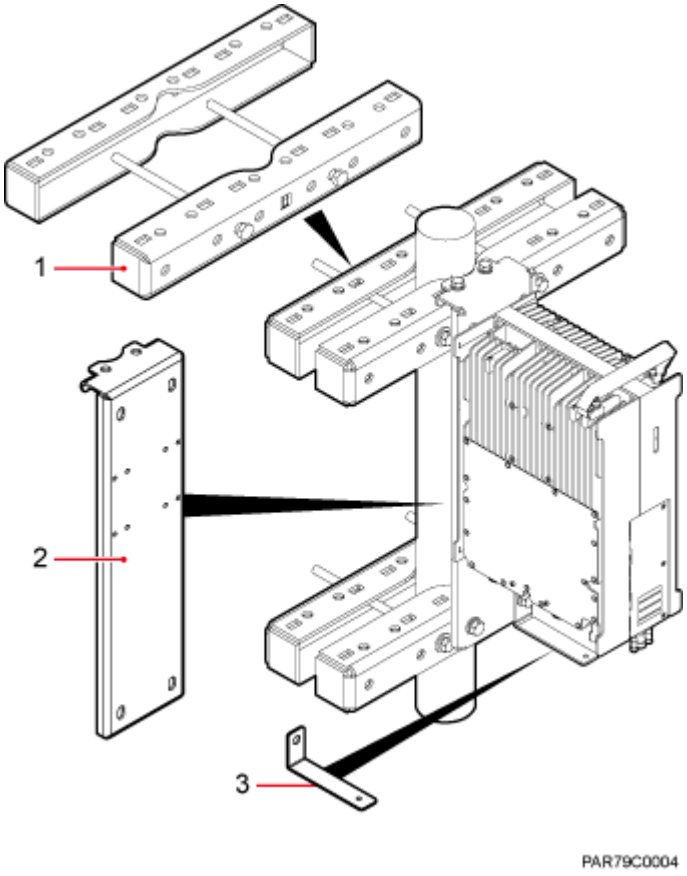

(1) Bracket assembly	(2) Backplane	(3) L plate

6.2 Installing the RRU on a Pole

This section describes the procedure for installing the RRU on a pole in centralized mode.

Procedure

Step 1 Install the upper mounting bracket on the pole, use a level to check that the mounting support is level, and tighten the screws on the mounting bracket to 40 N·m (354.03 lbf·in.) to 45 N·m (398.28 lbf·in.), as shown in **Figure 6-2**.

Copyright © Huawei Technologies Co., Ltd.

Figure 6-2 Securing the upper mounting bracket on the pole

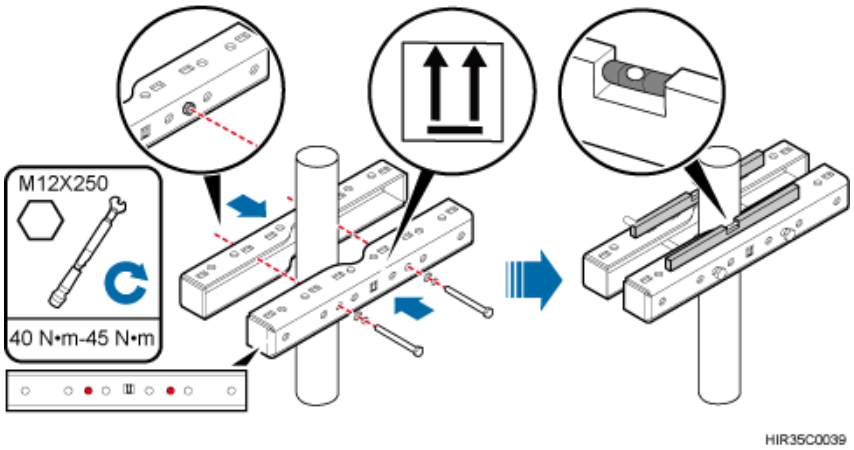

Step 2 Install screws on the backplane, and secure the backplane to the RRU by tightening the screws to 5 N·m (44.25 lbf·in.), as shown in **Figure 6-3**.

Figure 6-3 Securing the backplane to the RRU

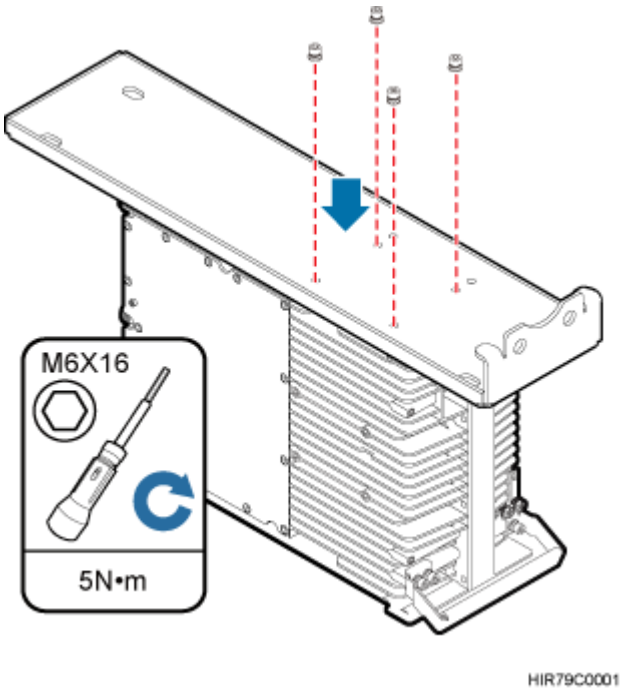

NOTICE

The installing method in **Figure 6-4** is incorrect.

Copyright © Huawei Technologies Co., Ltd.

Figure 6-4 Incorrect installing method

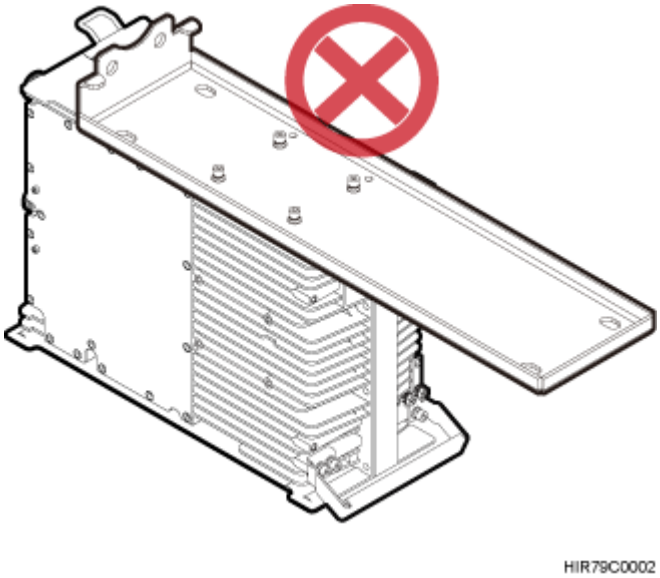

Step 3 Install the RRU on the upper mounting bracket, and tighten the screws on the bracket to 40 N·m (354.03 lbf·in.) to 45 N·m (398.28 lbf·in.), as shown in **Figure 6-5**.

Figure 6-5 Installing the RRU on the upper mounting bracket

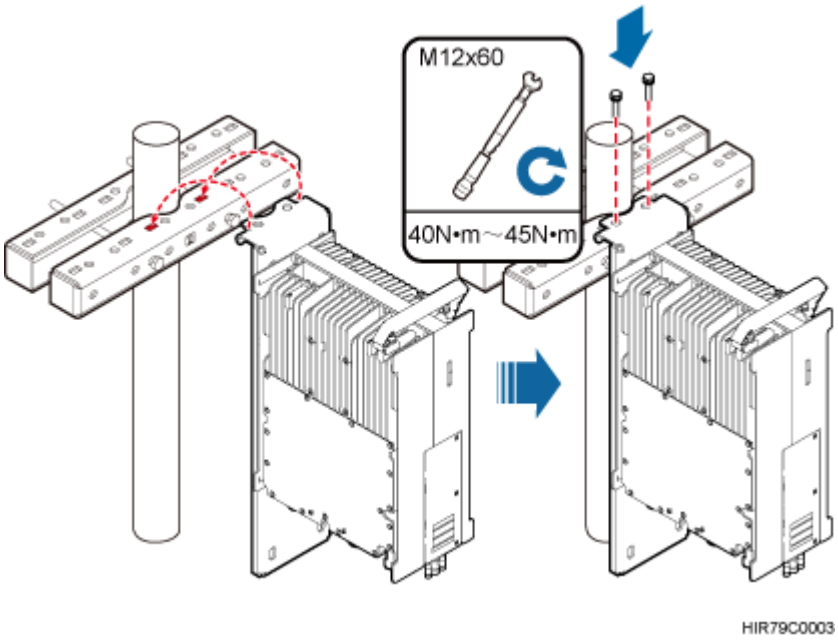

Step 4 Install the lower mounting bracket on the RRU and pole (An L plate is required at the bottom of the backplane), use a level to check that the mounting support is level, and tighten the screws on the bracket to 40 N·m (354.03 lbf·in.) to 45 N·m (398.28 lbf·in.), as shown in **Figure 6-6**.

Copyright © Huawei Technologies Co., Ltd.

Figure 6-6 Securing the lower mounting bracket

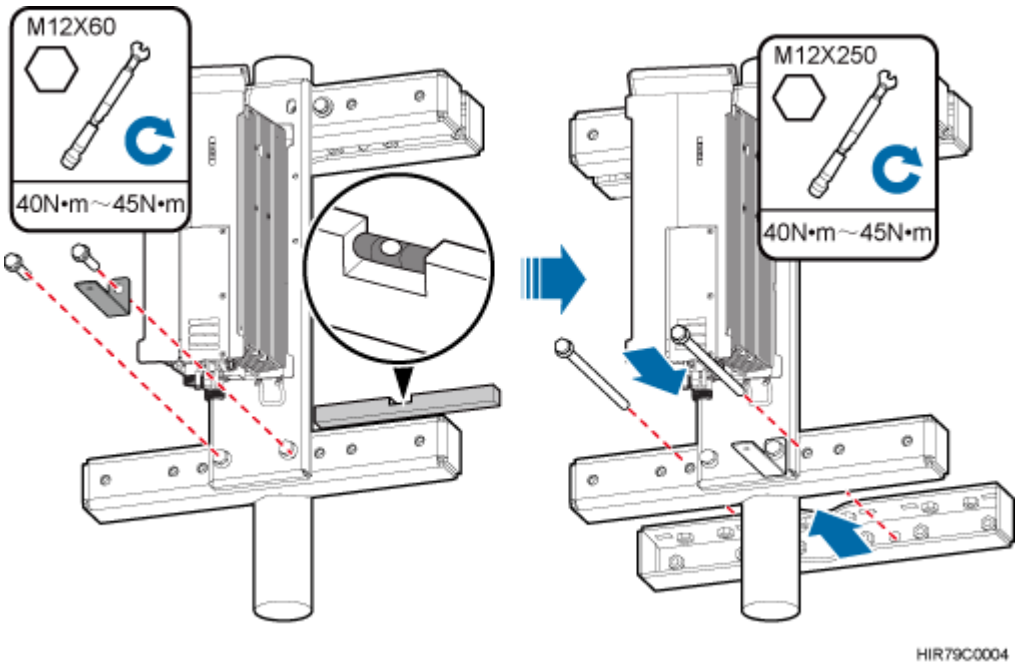

Step 5 Install the backplane on the second RRU, similar to **step2**.

Step 6 Install the second RRU on the upper mounting bracket on the pole, and tighten the screws on the bracket to 40 N·m (354.03 lbf·in.) to 45 N·m (398.28 lbf·in.),as shown in **Figure 6-7**.

Figure 6-7 Installing the RRU on the pole

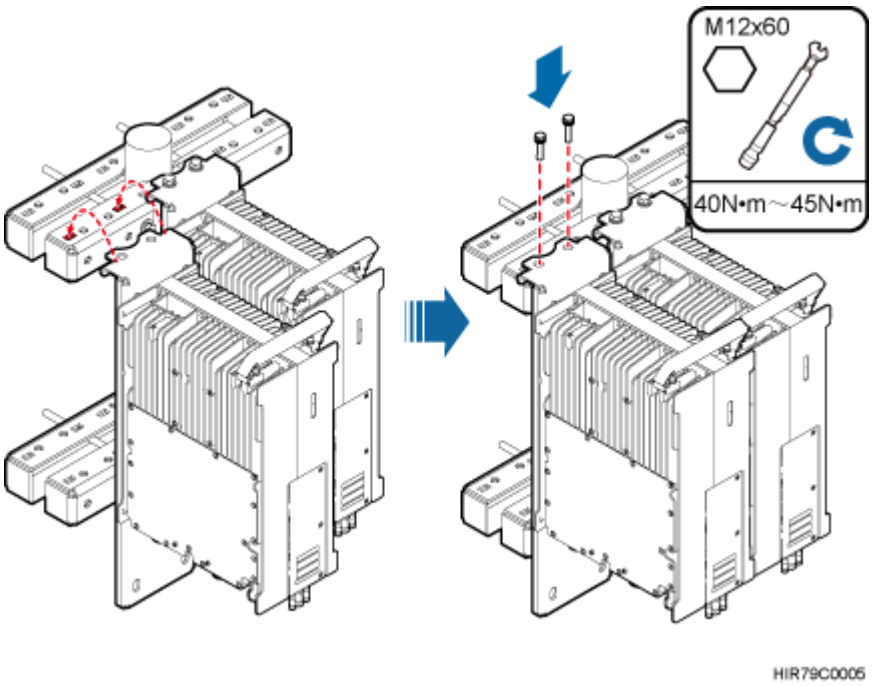

Step 7 Install the backplane and L plate on the lower mounting bracket, and tighten the screws on the bracket to 40 N·m (354.03 lbf·in.) to 45 N·m (398.28 lbf·in.), as shown in **Figure 6-8**.

Copyright © Huawei Technologies Co., Ltd.

Figure 6-8 Installing the backplane and L plate on the lower mounting bracket

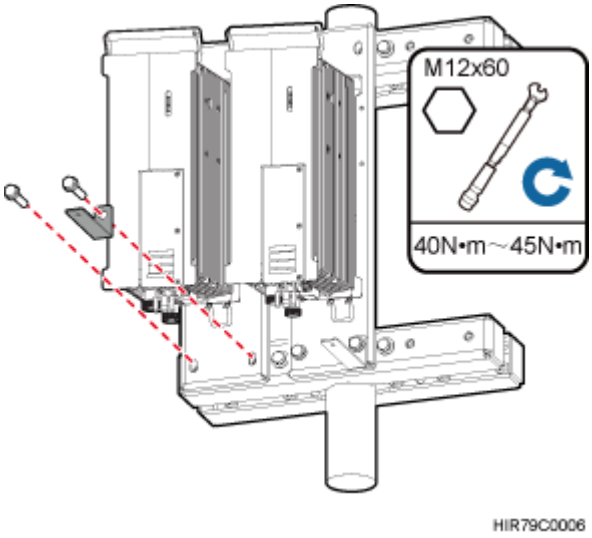

NOTE

Install the third RRU and the RRU on the other side of the pole the same way as the second RRU. The tightening torque is similar to that for the first RRU.

----End

6.3 Installing the RRU on a Tower

This section describes the procedure for installing the RRU on a tower in centralized mode.

Procedure

Step 1 Hoist the RRU onto a tower.

1. Install upper and lower mounting brackets on a pole, and then bind the pole using a lifting sling, as shown in **Figure 6-9**.

Copyright © Huawei Technologies Co., Ltd.

Figure 6-9 Installing upper and lower mounting brackets and binding the pole

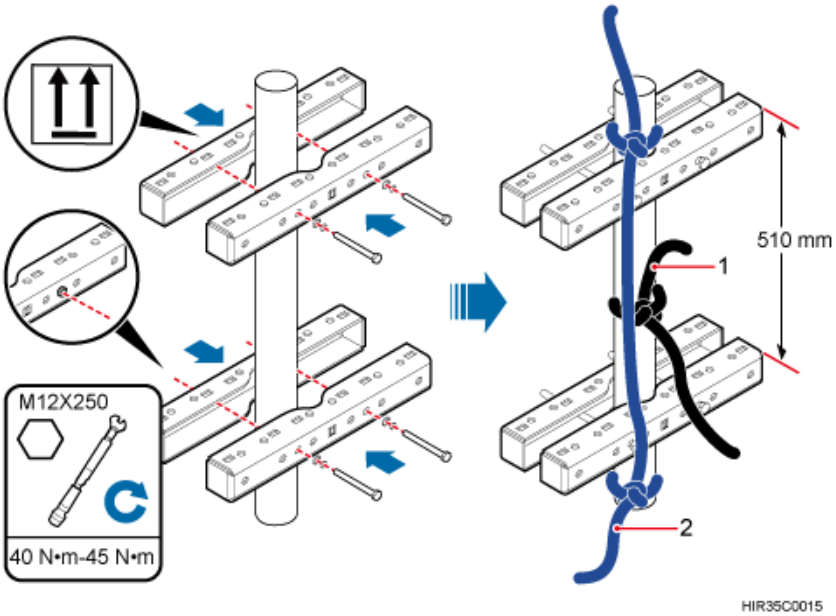

(1) Traction sling	(2) Lifting sling

2. Install the backplane on the RRU, and bind the RRU using a lifting sling and traction sling, as shown in **Figure 6-10**.

Figure 6-10 Installing the backplane and binding the RRU

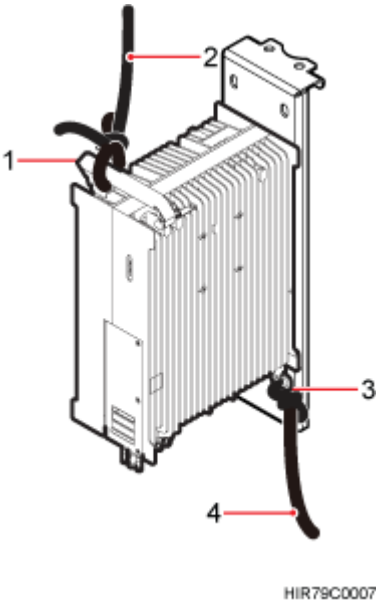

(1) Handle	(2) Lifting sling	(3) Traction eye	(4) Traction sling

Copyright © Huawei Technologies Co., Ltd.

NOTICE

- The handle has a capacity of bearing at least four times the weight of the RRU.
- The binding methods in **Figure 6-11** and **Figure 6-12** are incorrect.

Figure 6-11 Incorrect binding method (1)

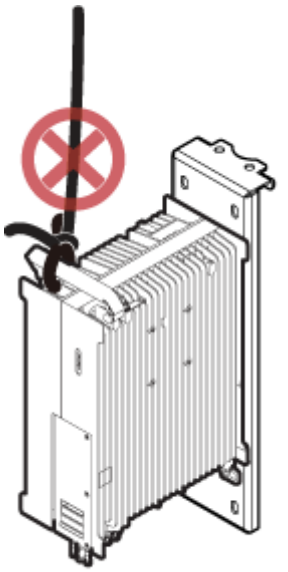

HIR79C0008

Figure 6-12 Incorrect binding method (2)

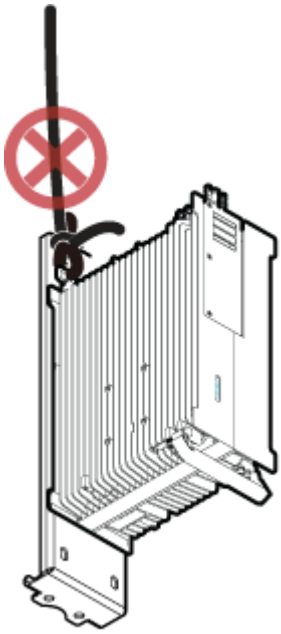

HIR79C0009

3. Hoist the pole onto the tower, as shown in **Figure 6-13**.

Copyright © Huawei Technologies Co., Ltd.

Figure 6-13 Hoisting the pole onto the tower

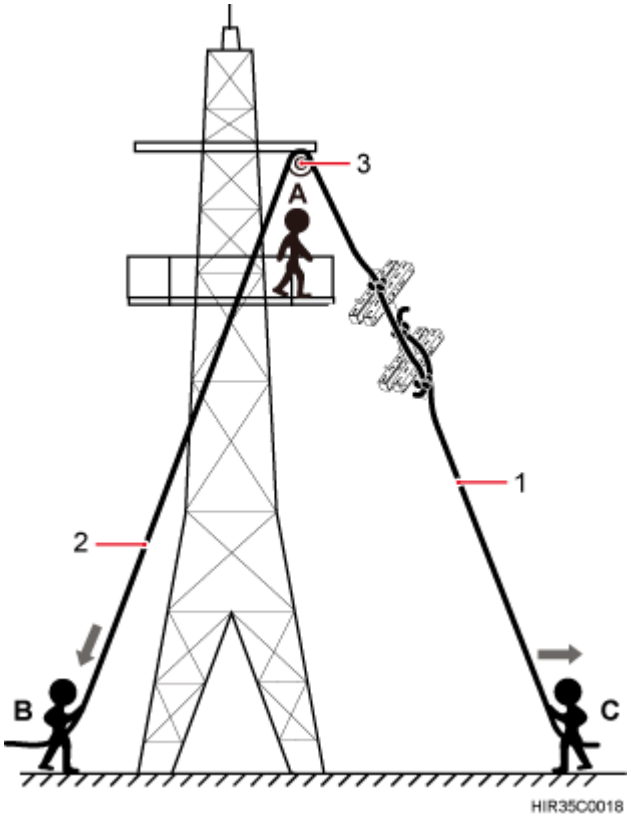

(1) Traction sling	(2) Lifting sling	(3) Fixed pulley

4. Hoist the RRU onto the tower, as shown in **Figure 6-14**.

Copyright © Huawei Technologies Co., Ltd.

Figure 6-14 Hoisting the RRU onto the tower

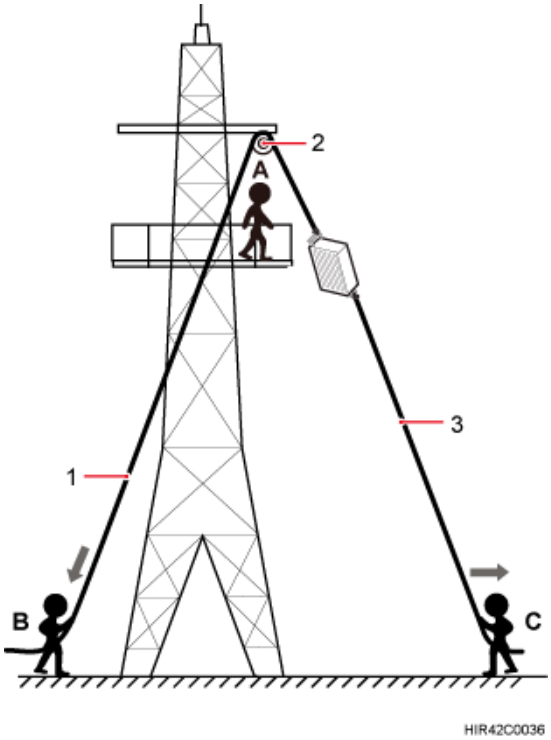

(1) Lifting sling	(2) Fixed pulley	(3) Traction sling

Step 2 Install the RRU on the tower.

1. Align the backplane with the holes on the upper mounting bracket, install screws on the holes, and secure the backplane to the upper mounting bracket by tightening the screws, as shown in **Figure 6-15**.

Copyright © Huawei Technologies Co., Ltd.

Figure 6-15 Installing the RRU on the pole

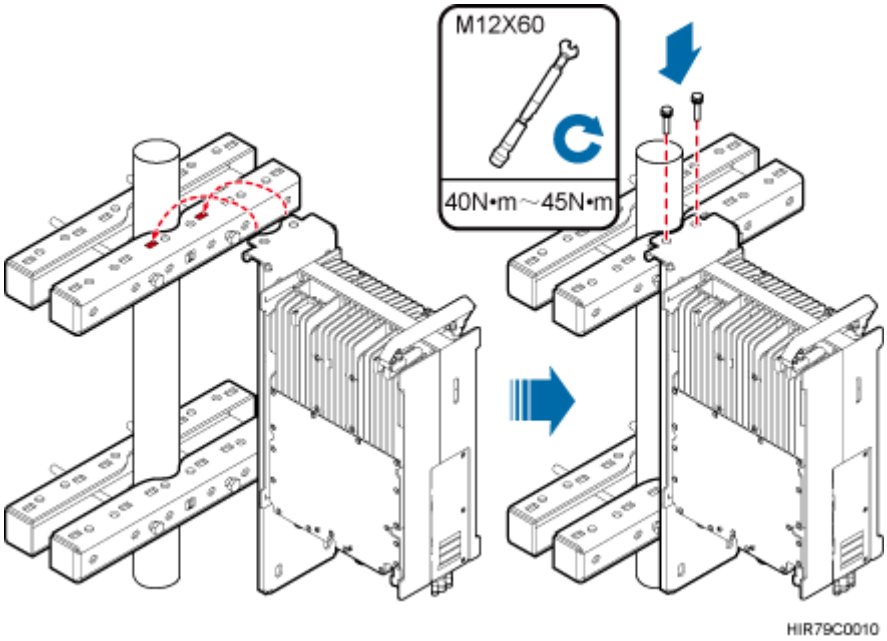

2. Install the backplane and the L plate on the lower mounting bracket, as shown in **Figure 6-16**.

Figure 6-16 Installing the backplane and the L plate on the lower mounting bracket

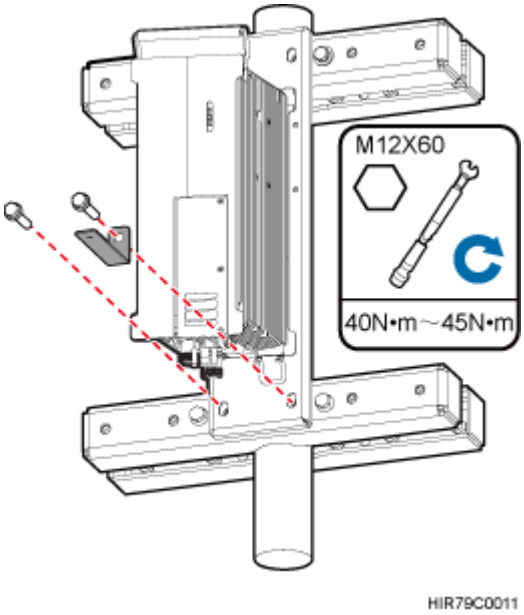

----End

Copyright © Huawei Technologies Co., Ltd.

7 Installing RRU Cables

About This Chapter

This chapter describes the procedure for installing RRU cables.

7.1 Cabling Requirements
Cables must be laid out according to the specified cabling requirements to prevent signal interference.

7.2 RRU Cable Connections
This section describes RRU cable connections.

7.3 Installing RRU Cables
This chapter describes the procedure for installing RRU cables.

7.4 RRU Cables
This section describes RRU cable connections.

7.5 Installing an RRU PGND Cable
This section describes the procedure for installing an RRU PGND cable.

7.6 Installing an RRU RF Jumper
This section describes the procedure for installing an RRU RF jumper.

7.7 Installing an RRU AISG Multi-Wire Cable and AISG Extension Cable
This section describes the procedures for installing an RRU AISG multi-wire cable and AISG extension cable.

7.8 Installing an RRU Alarm Cable
This section describes the procedure for installing an RRU alarm cable.

7.9 Opening the Cover Plate of an RRU Cabling Cavity
This section describes the procedure for opening the cover plate of an RRU cabling cavity.

7.10 Installing a CPRI Optical Cable
This section describes the procedure for installing a CPRI optical cable.

7.11 Installing an RRU Power Cable
This section describes the procedure for installing an RRU power cable.

7.12 Closing the Cover Plate of an RRU Cabling Cavity

Copyright © Huawei Technologies Co., Ltd.

This section describes the procedure for closing the cover plate of an RRU cabling cavity.

Copyright © Huawei Technologies Co., Ltd.

7.1 Cabling Requirements

Cables must be laid out according to the specified cabling requirements to prevent signal interference.

NOTE

If a cable listed below is not required, skip the cabling requirements of the cable.

General Cabling Requirements

Bending radius requirements

- The bending radius of a 7/8" feeder must be greater than 250 mm (9.84 in.), and the bending radius of a 5/4" feeder must be greater than 380 mm (14.96 in.).
- The bending radius of a 1/4" jumper must be greater than 35 mm (1.38 in.). The bending radius of a super-flexible 1/2" jumper must be greater than 50 mm (1.97 in.), and the bending radius of an ordinary 1/2" jumper must be greater than 127 mm (5 in.).
- The bending radius of a power cable or PGND cable must be at least three times its diameter.
- The bending radius of a fiber optic cable is at least 20 times of its diameter, and the bending radius of a breakout cable is at least 30 mm (1.18 in.).
- The bending radius of an E1/T1 cable must be at least three times its diameter.
- The bending radius of a signal cable must be at least five times its diameter.

Cable binding requirements

- Cables of the same type must be bound together.
- Different types of cables must be separately laid out and bound, with a minimum distance of 30 mm (1.18 in.) from each other.
- The cables must be bound tightly and neatly. The sheaths of the cables must not be damaged.
- The cable ties must face the same direction, and those at the same horizontal line must be in a straight line.
- The excess of the indoor cable ties is cut off. The excess of 5 mm (0.197 in.) of the outdoor cable ties is reserved, and the cut surfaces are smooth without sharp edges.
- After cables are installed, labels or nameplates must be attached to the cables at their ends, curves, and interconnection positions.

Security requirements

- When routing cables, avoid sharp objects, for example sharp edges on the wall. If necessary, use tubes to protect the cables.
- When routing cables, keep the cables away from heat sources and use heat insulation materials to insulate the cables from the heat sources.
- Reserve a proper distance (0.1 m or 3.937 in. is recommended) between equipment and cables especially at the cable curves to protect the cables and equipment.

Indoor cabling requirements

- Route each cable into the room through the feeder window.

Copyright © Huawei Technologies Co., Ltd.

- Reserve drip loops for all cables outside the feeder window before routing them into the room. Ensure that the radiuses of the drip loops are greater than or equal to the minimum bending radiuses of the cables.
- When routing a cable into the room, ensure that a person is assisting you in the room.
- Apply waterproof treatment to the feeder window.

Outdoor Cabling Requirements

- After being connected to a ground clip on power cables, a ground cable must be routed downwards to prevent water from entering the equipment to which the power cables connect.
- Protect outdoor cables against potential damage. For example, put the cables through tubes.
- The cables to be protected include AC power cables, transmission cables, and cables laid out underground.
- When routing cables through tubes on the ground below the cabinet, put a 30 mm to 50 mm (1.18 in. to 1.97 in.) length of the tubes into the base of the cabinet but do not put the tubes into the cabinet. Use waterproof tape or waterproof silicon gel to block both ends of the tubes and use sheet metal tabs to secure the tubes to the cable holes in the base.
- When routing cables through tubes along a metal cable trough below the cabinet, do not put the tubes into the base of the cabinet but cover the cable trough and connect the tubes to the cable holes in the base.
- When routing RRU cables, ensure that the highest positions of the routes of all RRU cables (except RF cables and AISG cables) must be lower than the bottom of the RRU.
- Use clips to secure cables outdoors. For the method of installing a clip, see the installation guide delivered with the clip.
- Arrange cables neatly along the routing direction and use clips to secure the cables.
- Determine the positions where the clips are installed according to the actual situation. For example, 7/8" feeders are secured with clips at an interval of 1.5 m to 2 m (4.92 ft to 6.56 ft), CPRI fiber optic cables and power cables are secured with clips at an interval of 1 m to 1.5 m (3.28 ft to 4.92 ft). Ensure that the clips are evenly spaced and in the same direction.
- When fastening cables with a clip, ensure that the cables are aligned neatly and are routed through the holes in the clip. Do not stretch the cables too tightly.

NOTE

There are two types of clips: 3-hole clip and 6-hole clip, which are described as follows:

- A 3-hole clip is shown by illustration a in the following figure. It is often used to fasten feeders.
- A 6-hole clip is shown by illustration b in the following figure. It is often used to fasten power cables and CPRI fiber optic cables.

Copyright © Huawei Technologies Co., Ltd.

Figure 7-1 Exterior of the clips

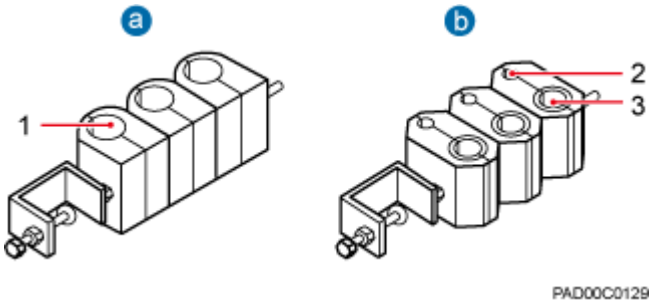

(1) Cable hole for feeders (2) Cable hole for fiber optic cables (3) Cable hole for power cables

The following figure shows the cables secured on a cable tray.

Figure 7-2 Cables secured on a cable tray

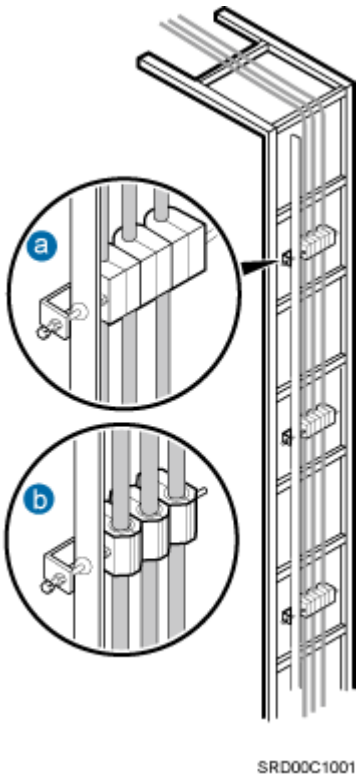

(1) 3-hole clip (2) 6-hole clip

The following figure shows the cables secured on a tower.

Copyright © Huawei Technologies Co., Ltd.

Figure 7-3 Cables secured on a tower

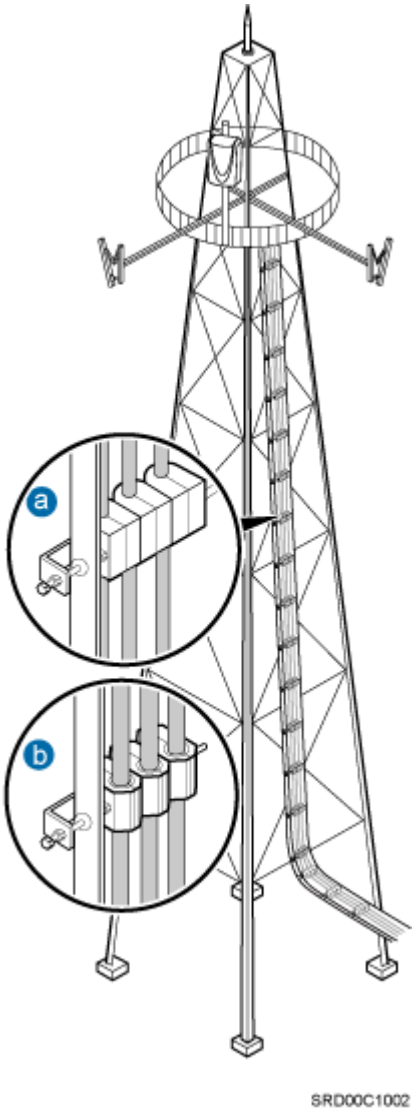

(1) 3-hole clip (2) 6-hole clip

Special Cabling Requirements

Cabling of power cables

- Power cables must be installed in the position specified in engineering design documents.
- If the length of power cables is insufficient, replace the cables rather than adding connectors or soldering joints to lengthen the cables.
- Cables can only be laid out under well-planned instructions. The cabling activities of fiber optic cables are allowed only when qualified personnel and communication facilities are available.
- Do not circle and twist cables.

Copyright © Huawei Technologies Co., Ltd.

- After routing a DC power cable onto the platform on a tower, route it along the shortest path to the rails surrounding the platform, and route it along the inside of the rails.
- After routing a DC power cable close to the equipment on a tower, use clips to secure the power cable onto a pole or the rails surrounding the platform. Ensure that there is no excessively long distance between the equipment and the position where the power cable is secured.

Cabling of PGND cables

- PGND cables for a base station must be connected to the same group of ground bars.
- PGND cables must be buried in the ground or routed indoors.
- The external conductor of the coaxial wire and the shield layer of the shielded cable must have proper electrical contact with the metal surface of the equipment to which they are connected.
- PGND cables and signal cables must be installed separately. A certain distance must be reserved between them to prevent interference from each other.
- Switches or fuses must not be installed on the PGND cables.
- Other devices must not be used for electrical connections of the PGND cables.
- All the metal parts in the housing of the equipment must be reliably connected to the ground terminal.

Cabling of E1 cables

- E1 cables must not cross power cables, PGND cables, or RF cables when laid out. If transmission cables are laid out with power cables, PGND cables, or RF cables in parallel, the spacing between them must be greater than 30 mm (1.18 in.).
- E1 cables are lined up straight and bound neatly with cable ties.
- Sufficient slack is provided for E1 cables at turns.
- E1 cables must not be pressed by the door of the cabinet when routed, as shown in the following figure.

Figure 7-4 E1 cables routed in the cabinet

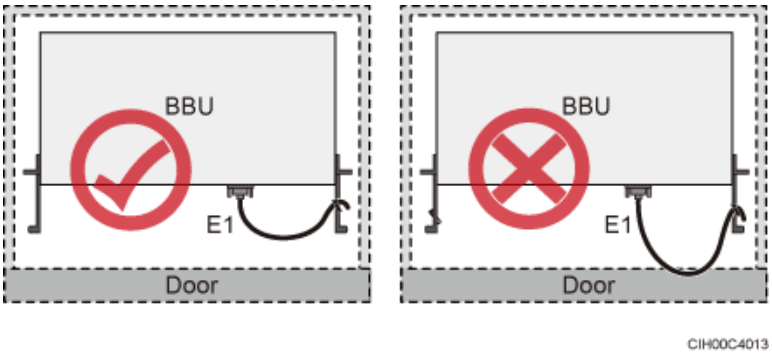

Cabling of fiber optic cables

- At least three people are required for laying out fiber optic cables. The cabling activities of fiber optic cables are allowed only when qualified personnel and communication facilities are available.

Copyright © Huawei Technologies Co., Ltd.

- The operating temperature of fiber optic cables ranges from -40ºC to +60ºC (-40ºF to +140ºF). If the actual temperature is beyond this range, take protective measures or select another route.
- Do not circle and twist cables.
- Do not bind a fiber optic cable at the position where it bends.
- Do not stretch, step on, or place heavy objects on fiber optic cables. Keep the fiber optic cables away from sharp objects.
- When fiber optic cables are routed, the excess of the fiber optic cables must be coiled around special devices, such as a fiber coiler.
- An unarmored fiber optic cable must be bound using binding straps. If a fiber optic patch cord needs to be secured in a cabinet or a piece of equipment, use binding straps to bind it and then use cable ties to secure the binding straps to the cabinet or equipment. Ensure that the fiber optic cables can flexibly move in the cable ties. Do not bend the fiber optic cables sharply. The following figure shows how to bind the fiber optic cables correctly.

Figure 7-5 Binding fiber optic cables

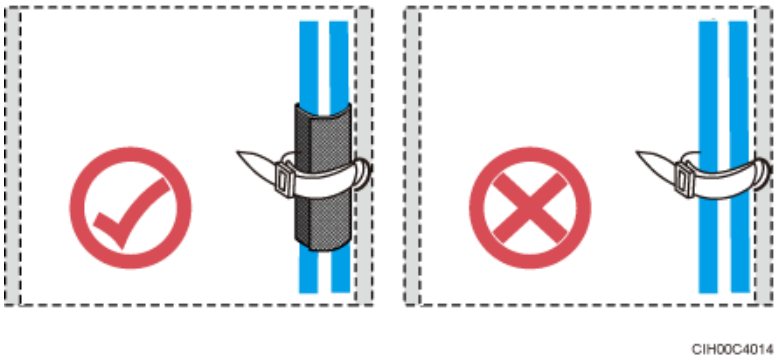

- When coiling fiber optic cables, apply even strength. Do not bend the fiber optic cables with force.
- Unused optical connectors must be covered with dustproof caps.
- The fiber optic cables must not be pressed by the door of the cabinet when routed, as shown in the following figures.

Figure 7-6 CPRI fiber optic cables routed in the cabinet (1)

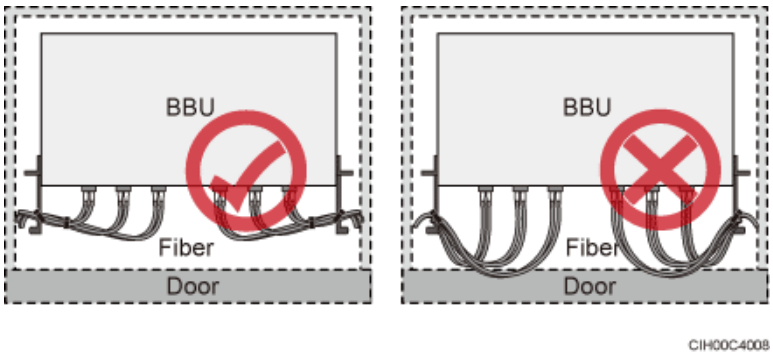

Copyright © Huawei Technologies Co., Ltd.

Figure 7-7 CPRI fiber optic cables routed in the cabinet (2)

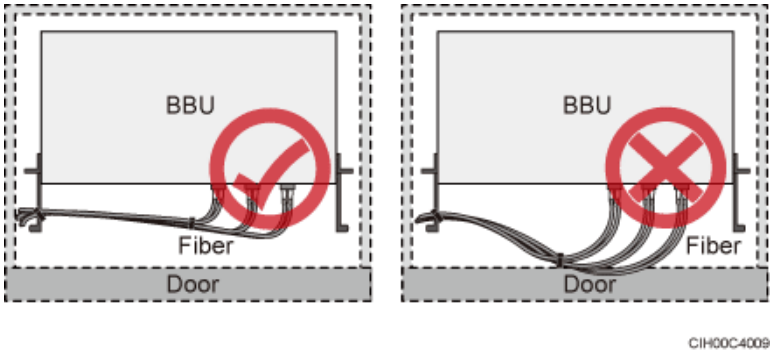

Figure 7-8 FE/GE fiber optic cables routed in the cabinet

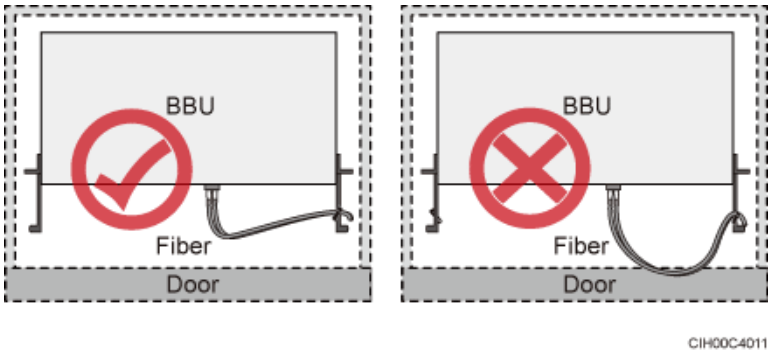

- After routing a fiber optic cable onto the platform on a tower, route it along the shortest path to the rails surrounding the platform, and route it along the inside of the rails.
- After routing a fiber optic cable close to the equipment on a tower, use clips to secure the fiber optic cable onto a pole or the rails surrounding the platform. Ensure that there is no excessively long distance between the equipment and the position where the cable is secured.
- Coil the excess of the fiber optic cables near the equipment on the tower before securing the cables on the tower.

7.2 RRU Cable Connections

This section describes RRU cable connections.

NOTE

The RRU does not support power cable cascading.

Figure 7-9 shows the cable connections of a single RRU.

Copyright © Huawei Technologies Co., Ltd.

Figure 7-9 Cable connections of a single RRU

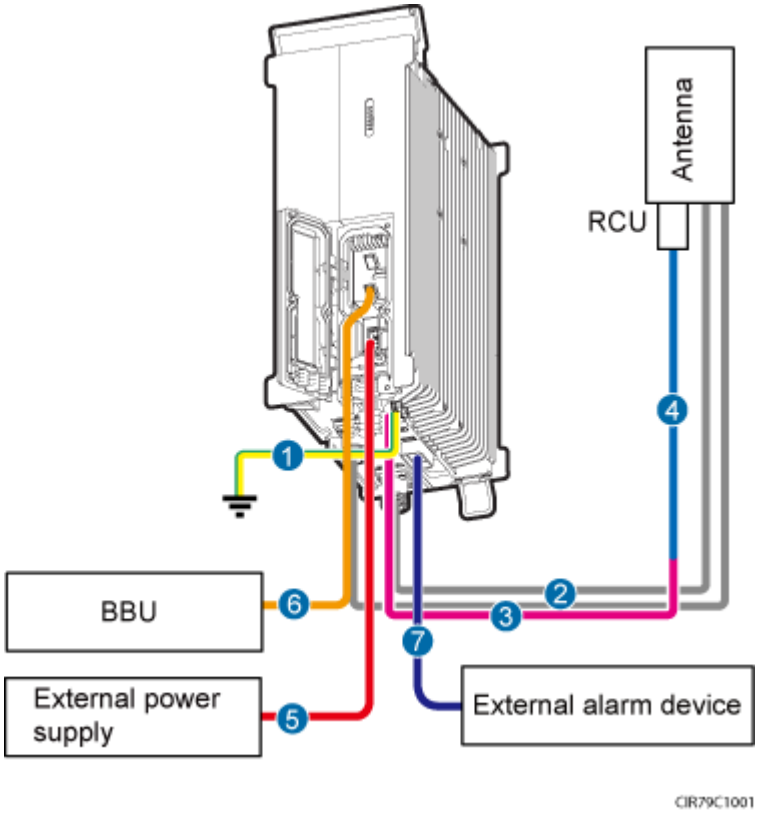

(1) RRU PGND cable	(2) RRU RF jumper	(3) RRU AISG multi-wire cable
(4) RRU AISG extension cable	(5) RRU power cable	(6) CPRI optical fiber
(7) RRU alarm cable	-	-

Figure 7-10 shows the cable connections of multiple RRUs.

Copyright © Huawei Technologies Co., Ltd.

Figure 7-10 Cable connections of multiple RRUs

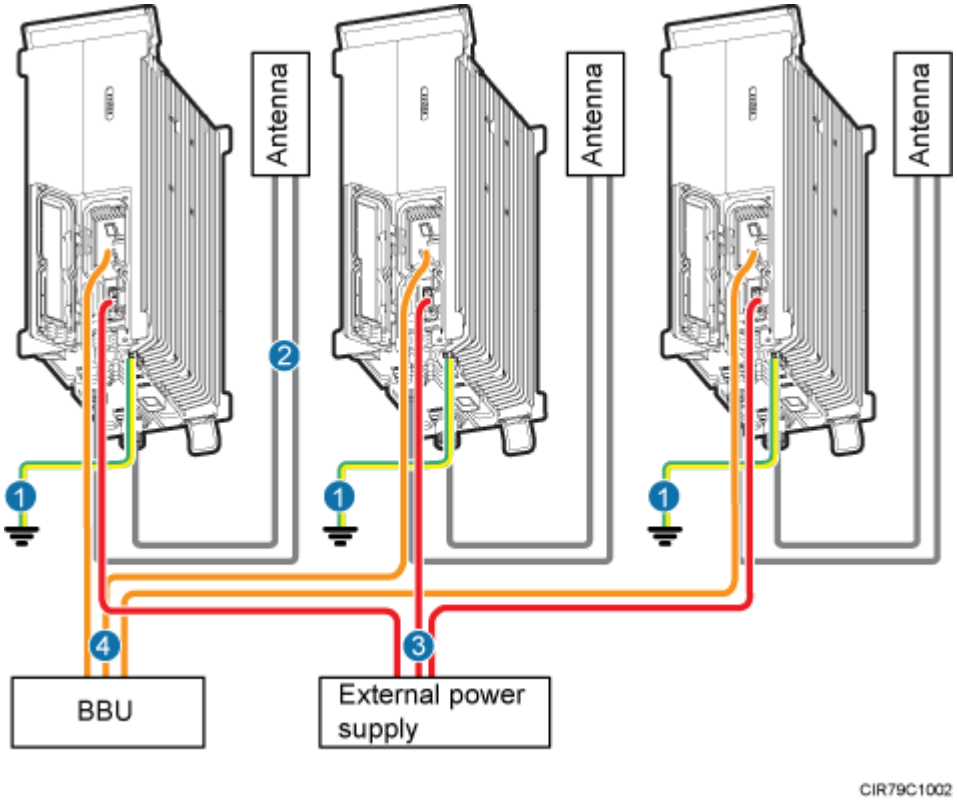

(1) RRU PGND cable	(2) RRU RF jumper	(3) RRU power cable
(4) CPRI optical fiber	-	-

7.3 Installing RRU Cables

This chapter describes the procedure for installing RRU cables.

Figure 7-11 shows the procedure for installing RRU cables.

Copyright © Huawei Technologies Co., Ltd.

Figure 7-11 Procedure for installing RRU cables

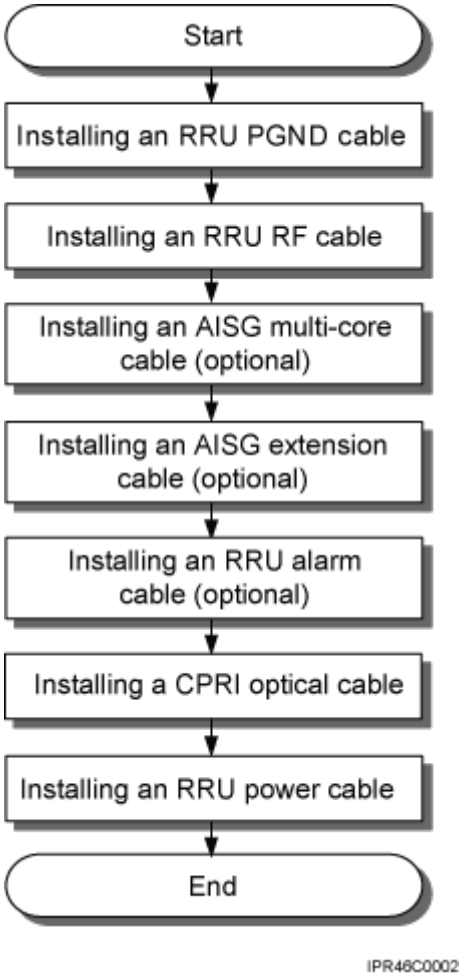

7.4 RRU Cables

This section describes RRU cable connections.

Table 7-1 lists RRU cables.

Table 7-1 RRU cables

Cable	One End		The Other End	
	Connector	Installation Position	Connector	Installation Position
RRU PGND Cable	OT terminal (M6, 16 mm^2 or 0.025 $in.^2$)	Ground terminal on the RRU	OT terminal (M8, 16 mm^2 or 0.025 $in.^2$)	Ground terminal on the ground bar

Copyright © Huawei Technologies Co., Ltd.

Cable	One End		The Other End	
	Connector	Installation Position	Connector	Installation Position
RRU Power Cable	Tool-less female connector (pressfit type)	NEG(-) and RTN(+) ports on the RRU	Depending on the power supply equipment	External power equipment
RRU Alarm Cable	DB15 male connector	EXT_ALM port on the RRU	Cord end terminal	External alarm device
CPRI Fiber Optic Cable	DLC connector	CPRI0 port on the RRU	DLC connector	CPRI port on a board in the BBU
RRU RF Jumper	DIN male connector	RF ports on the RRU	DIN male connector	Antenna system
RRU AISG Multi-Wire Cable	DB9 waterproof male connector	RET port on the RRU	Standard AISG female connector	Standard AISG male connector on the RCU or on the AISG extension cable
RRU AISG Extension Cable	Standard AISG male connector	Standard AISG female connector on the AISG multi-wire cable	Standard AISG female connector	Standard AISG male connector on the RCU

7.5 Installing an RRU PGND Cable

This section describes the procedure for installing an RRU PGND cable.

Context

The cross-sectional area of an RRU PGND cable is 16 mm^2 (0.025 $in.^2$). The cable has an M6 OT terminal at one end and an M8 terminal at the other end.

DANGER

Install RRU PGND cables by strictly following the following operations. Otherwise, damage to the RRU or personal injury may occur.

Copyright © Huawei Technologies Co., Ltd.

Procedure

Step 1 According to the actual cable route, cut the PGND cable into a proper length to prepare an RRU PGND cable. Then, add an OT terminal at each end of the cable according to the instructions in Assembling the OT Terminal and the Power Cable.

Step 2 Install the RRU PGND cable.

Connect the M6 OT terminal at one end of the PGND cable to the ground terminal at the RRU bottom and the M8 OT terminal at the other end to the external ground bar, as shown in **Figure 7-12**.

Figure 7-12 Installing an RRU PGND cable

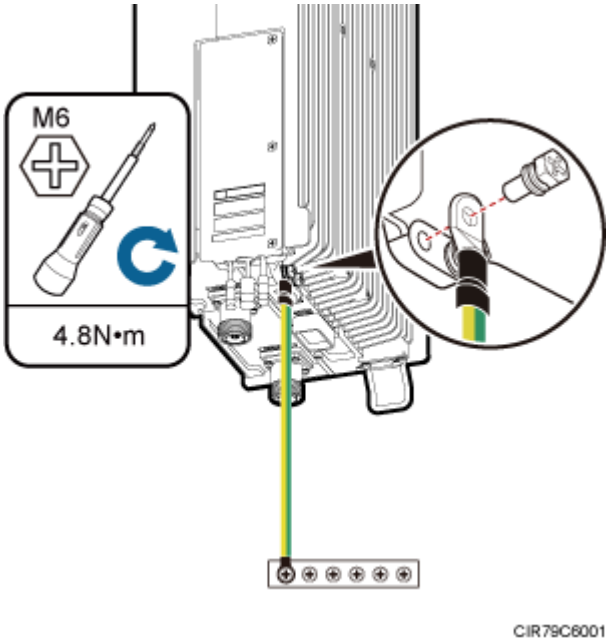

NOTE

Crimp OT terminals in correct positions, as shown in **Figure 7-13**.

Figure 7-13 Correct position of an OT terminal

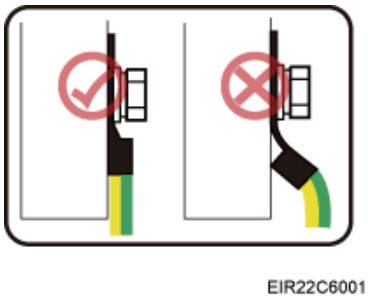

Copyright © Huawei Technologies Co., Ltd.

Step 3 Label the installed cable according to the instructions in Attaching a Cable-Tying Label.

----End

7.6 Installing an RRU RF Jumper

This section describes the procedure for installing an RRU RF jumper.

Procedure

Step 1 Connect the DIN male connector at one end of the RRU RF jumper to the ANT port on the RRU, and use a torque wrench to tighten the connector to 25 N·m (221.27 lbf·in.), as shown in **Figure 7-14**.

Figure 7-14 Installing an RRU RF jumper

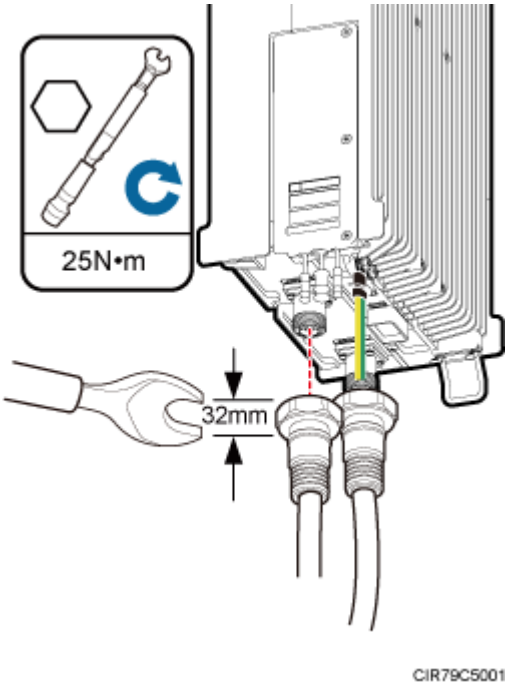

NOTICE

On AC-powered electric railways, such as high-speed railways, when leaky cables are connected to RRUs installed in tunnels, high-voltage-resistance DC blocks must be installed between RRU RF jumpers and the leaky cables to protect the RRUs against damage.

Step 2 Connect the other end of the RF jumper to the external antenna system.

Step 3 Waterproof the connectors of the RF jumper by referring to **Figure 7-15**.

Copyright © Huawei Technologies Co., Ltd.

Figure 7-15 Waterproofing a connector of the RF jumper

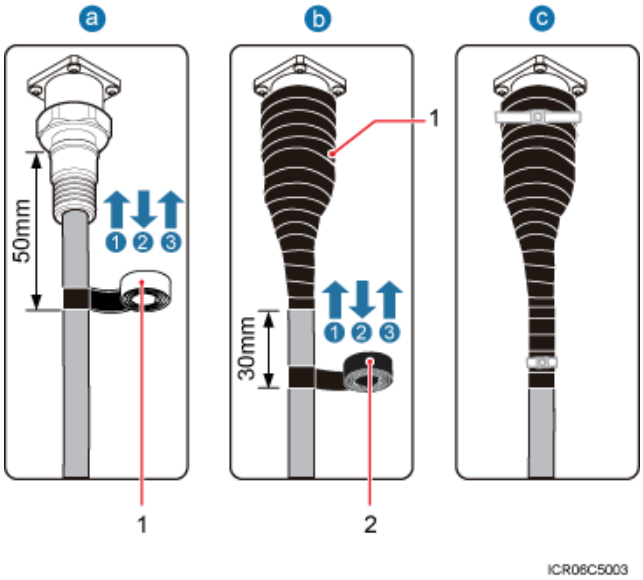

(1) Waterproof tape	(2) PVC insulation tape

NOTE

- Before wrapping waterproof tape, stretch the tape evenly until the length of the tape becomes twice its original length.
- Do not stretch the PVC insulation tape when wrapping the PVC insulation tape.
- Wrap each layer of tape around the connector tightly and neatly, and ensure that each layer of tape overlaps more than 50% of the preceding layer. Ensure that neighboring layers are stuck to each other.
- Ensure that the adhesive surface of the tape overlaps the lower layer.
- When cutting off the cable ties, reserve a redundant length of 3 mm (0.12 in.) to 5 mm (0.2 in.).

1. Wrap three layers of waterproof tape on the connector, first from bottom up, then from top down, and finally from bottom up. Start wrapping the connector at a position 50 mm (1.97 in.) away below the bottom of the connector to the top of the connector, first from bottom up, then from top down, and finally from bottom up. Cut off the redundant tape after three layers are wrapped. Wrap each layer of tape around the connector tightly.
2. Wrap three layers of PVC insulation tape. Start the wrapping at a position 30 mm (1.18 in.) away below the bottom of the waterproof tape to the top of the connector, first from bottom up, then from top down, and finally from bottom up. Cut off the redundant tape after three layers are wrapped. Wrap each layer of tape around the connector tightly.
3. Start binding cable ties to the cable at a position 3 mm (0.12 in.) to 5 mm (0.2 in.) away from one end of the PVC insulation tape.

Step 4 Check the dustproof caps on antenna connectors. In outdoor scenarios, dustproof caps must be waterproofed, as shown in **Figure 7-16**.

Copyright © Huawei Technologies Co., Ltd.

NOTICE

Do not remove dustproof caps from vacant antenna connectors.

Figure 7-16 Waterproofing a dustproof cap

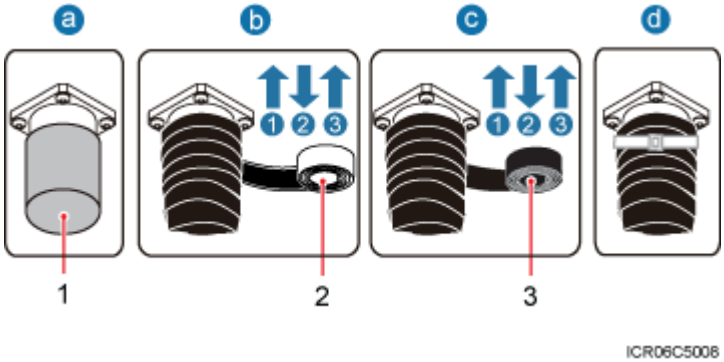

(1) Dustproof cap (2) Waterproof tape (3) PVC insulation tape

NOTE

- Before wrapping waterproof tape, stretch the tape evenly until the length of the tape becomes twice its original length.
- Do not stretch the PVC insulation tape when wrapping the PVC insulation tape.
- Wrap each layer of tape around the connector tightly and neatly, and ensure that each layer of tape overlaps more than 50% of the preceding layer. Ensure that neighboring layers are stuck to each other.
- Ensure that the adhesive surface of the tape overlaps the lower layer.
- When cutting off the cable ties, reserve a redundant length of 3 mm (0.12 in.) to 5 mm (0.2 in.).

1. Verify that dustproof caps are not removed.
2. Wrap three layers of waterproof tape on the connector, first from bottom up, then from top down, and finally from bottom up. Wrap each connector with three layers of waterproof tape, from bottom up, then from top down, and finally from bottom up. Do not cut the tape until all the three layers of the tape are already wrapped. Cut off the redundant tape after three layers are wrapped. Wrap each layer of tape around the connector tightly.
3. Wrap three layers of PVC insulation tape. Wrap each connector with three layers of waterproof tape, from bottom up, then from top down, and finally from bottom up. Do not cut the tape until all the three layers of the tape are already wrapped. Cut off the redundant tape after three layers are wrapped. Wrap each layer of tape around the connector tightly.
4. Start binding cable ties to the cable at a position 3 mm (0.12 in.) to 5 mm (0.2 in.) away from one end of the PVC insulation tape.

Step 5 Route the cables according to the instructions in Cabling Requirements, and then use cable ties to bind the cables.

Step 6 Label the installed cables according to the instructions in Attaching a Sign Plate Label.

Copyright © Huawei Technologies Co., Ltd.

Step 7 Attach color-coding to the installed RF jumper according to the instructions in Attaching the Color Ring.

----End

7.7 Installing an RRU AISG Multi-Wire Cable and AISG Extension Cable

This section describes the procedures for installing an RRU AISG multi-wire cable and AISG extension cable.

Context

When the distance between an RRU and a Remote Control Unit (RCU) is longer than 5 m (16.4 ft.), an AISG multi-wire cable is not long enough to connect the RRU and the RCU. In this case, an AISG extension cable is used to extend the AISG multi-wire cable.

Procedure

- Install an AISG multi-wire cable that is not configured with an AISG extension cable.
  1. Use an M3 flat-head screwdriver to loosen the screws on the dustproof cap on the RET port and remove the dustproof cap.
  2. Link the waterproofed DB9 connector at one end the AISG multi-wire cable to the RET port on the RRU bottom, as shown in **Figure 7-17**.

Figure 7-17 Installing an RRU AISG multi-wire cable

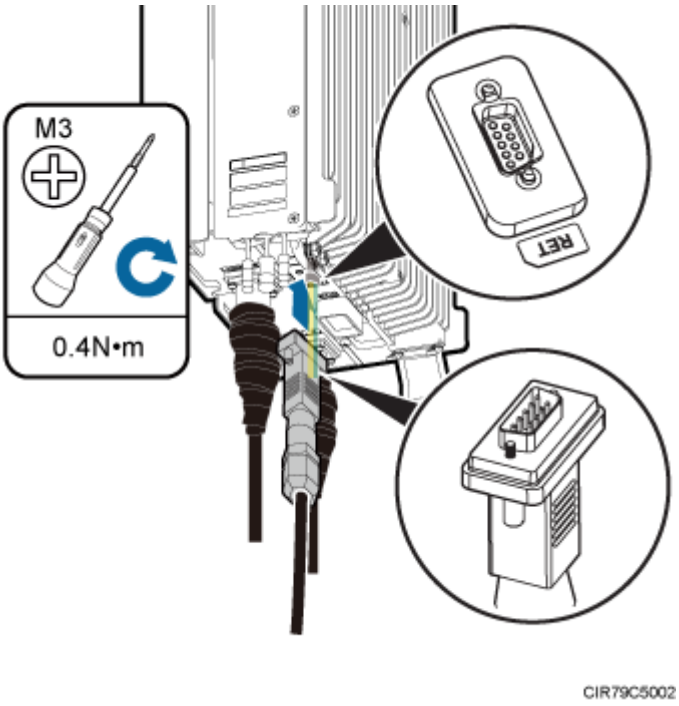

Copyright © Huawei Technologies Co., Ltd.

3. Use an M3 Phillips screwdriver to tighten the posts on both sides of the waterproof DB9 connector to 0.4 N·m (3.54 lbf·in.).
4. Connect the other end of the cable to the standard AISG male connector on the RCU.
5. Route the cables according to the instructions in Cabling Requirements, and then use cable ties to bind the cables.
6. Label the installed cables according to the instructions in Attaching an L-Shaped Label.

- Install an AISG multi-wire cable that is configured with an AISG extension cable.
  1. Use an M3 flat-head screwdriver to loosen the screws on the dustproof cap on the RET port and remove the dustproof cap.
  2. Link the waterproofed DB9 connector at one end of the AISG multi-wire cable to the RET port on the RRU bottom, and link the other end to the standard AISG male connector of the AISG extension cable, as shown in **Figure 7-18**.

Figure 7-18 Installing an RRU AISG multi-wire cable

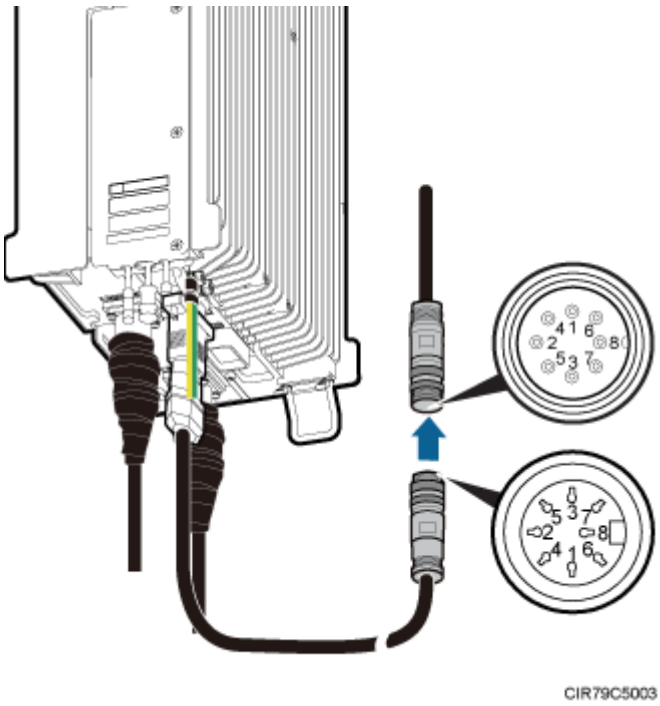

  3. Use an M3 Phillips screwdriver to tighten the posts on both sides of the waterproof DB9 connector to 0.4 N·m (3.54 lbf·in.).
  4. Connect the other end of the AISG extension cable to the standard AISG male connector on the RCU, as shown in **Figure 7-19**.

Copyright © Huawei Technologies Co., Ltd.

Figure 7-19 Installing an RRU AISG extension cable

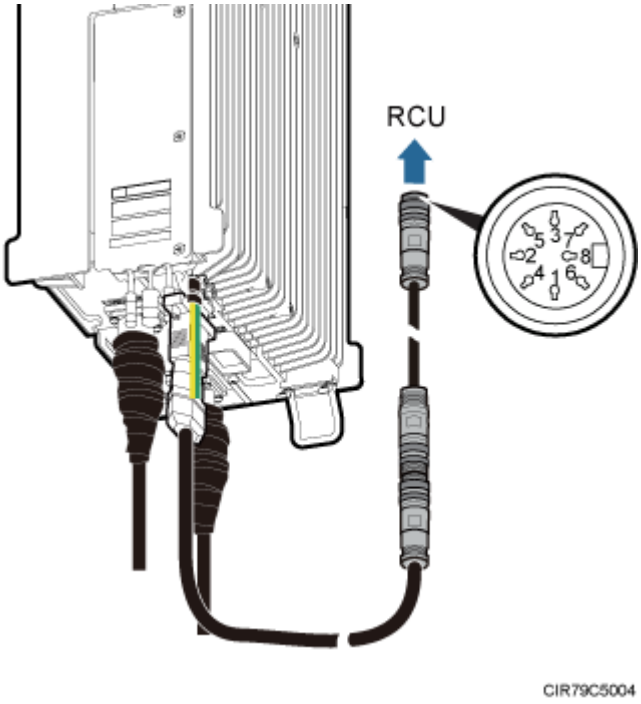

5. Route the cables according to the instructions in Cabling Requirements, and then use cable ties to bind the cables.
6. Label the installed cables according to the instructions in Attaching an L-Shaped Label.

----End

7.8 Installing an RRU Alarm Cable

This section describes the procedure for installing an RRU alarm cable.

Procedure

Step 1 Use an M3 Phillips screwdriver to loosen the screws on the dustproof cap on the EXT_ALM port and remove the dustproof cap.

Step 2 Connect the waterproof DB15 connector at one end of the RRU alarm cable to the **EXT_ALM** port on the RRU, as shown in **Figure 7-20**.

Copyright © Huawei Technologies Co., Ltd.

Figure 7-20 Installing an RRU alarm cable

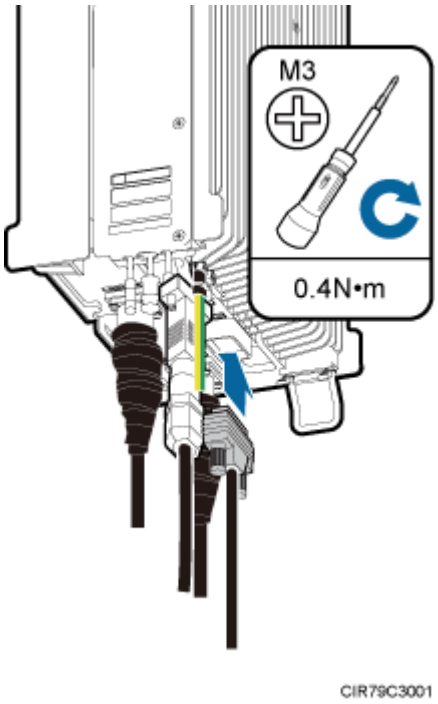

NOTE

Install the waterproof DB15 male connector on the RRU alarm cable with caution, preventing the pin assignment from being damaged.

Step 3 Use an M3 Phillips screwdriver to tighten the posts on both sides of the waterproof DB15 male connector to 0.4 N·m (3.54 lbf·in.).

Step 4 Connect the eight cord end terminals at the other end to external alarm devices.

NOTE

Use insulating adhesive tapes to wrap cord end terminals that are not in use and fix them at a proper position based on the onsite situations. This prevents false alarm reporting and equipment damage due to contact of exposed cables. **Figure 7-21** shows the method for handling cord end terminals not in use.

Figure 7-21 Method for handling cord end terminals that are not in use

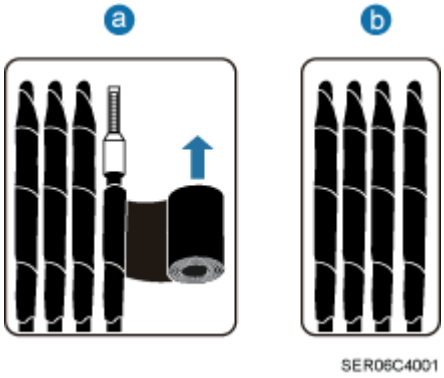

Copyright © Huawei Technologies Co., Ltd.

Step 5 Route the cables according to the instructions in Cabling Requirements, and then use cable ties to bind the cables.

Step 6 Label the installed cables according to the instructions in Attaching an L-Shaped Label.

----End

7.9 Opening the Cover Plate of an RRU Cabling Cavity

This section describes the procedure for opening the cover plate of an RRU cabling cavity.

Procedure

Step 1 Wear ESD gloves.

NOTICE

Take proper ESD protection measures, for example, wear ESD gloves, to prevent electrostatic damage to the boards, modules, or electronic components.

Step 2 Use an M5 Phillips screwdriver to loosen the three screws on the cover plate of the RRU cabling cavity, and open the cover plate, as shown in **Figure 7-22**.

Figure 7-22 Opening the cover plate of the RRU cabling cavity

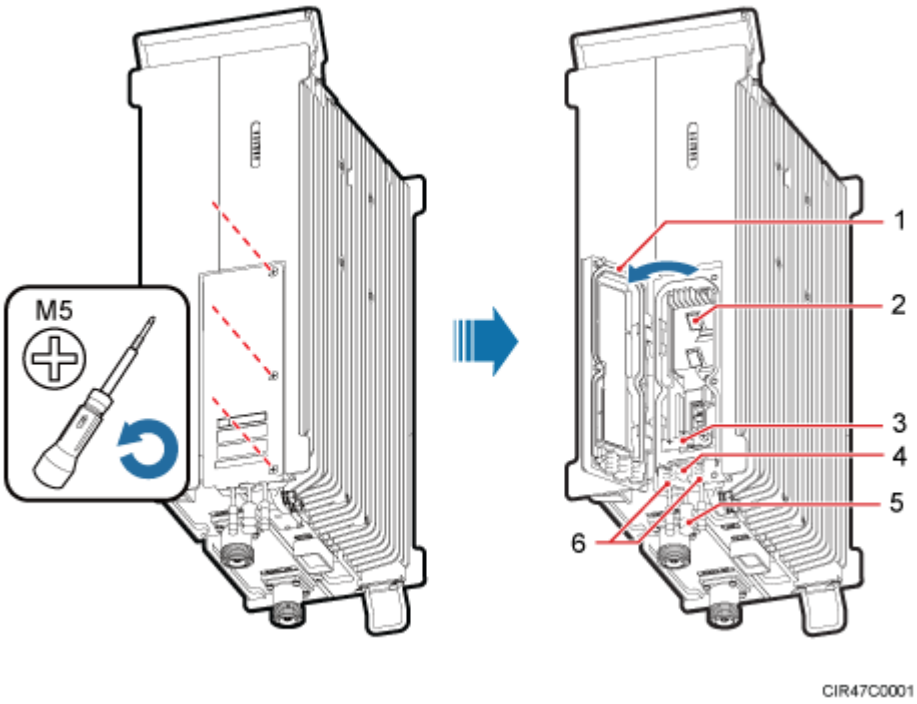

(1) Cover plate (2) Cabling cavity (3) Clip

(4) Cable trough for the power cable (5) Waterproof block (6) Cable trough for the fiber optical cable

Copyright © Huawei Technologies Co., Ltd.

Step 3 Loosen the screws on the clip using an M4 Phillips screwdriver, and open the clip, as shown in Figure 7-23.

NOTE

Open the clip only for the associated cable.

Figure 7-23 Opening clips

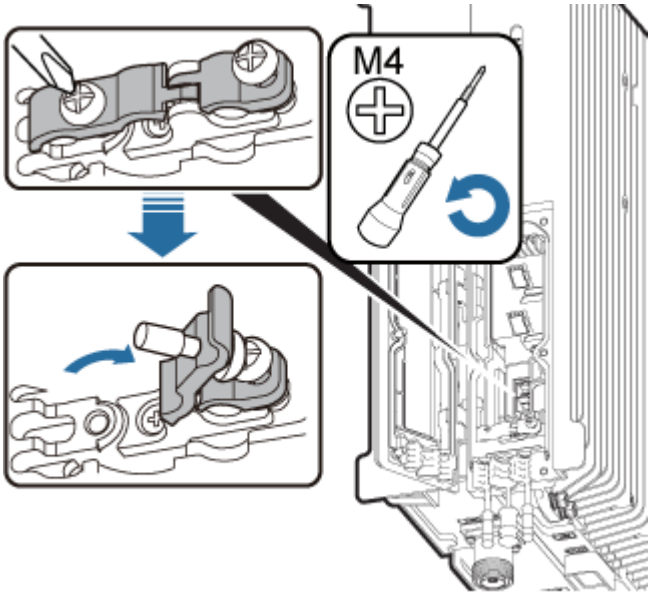

Step 4 Remove the waterproof block.

NOTE

Remove only the waterproof blocks for the cables to be installed.

----End

7.10 Installing a CPRI Optical Cable

This section describes the procedure for installing a CPRI optical cable.

Prerequisites

Before the installation, single-mode optical modules can be distinguished from multimode optical modules in either of the following ways:

- SM and MM labels on an optical module: SM indicates a single-mode optical module, and MM indicates a multimode optical module.
- Color of the puller on an optical module: Blue indicates a single-mode optical module, and black or gray indicates a multimode optical module.

Copyright © Huawei Technologies Co., Ltd.

NOTICE

The optical modules to be installed must match CPRI rates.

Context

- A CPRI optical cable transmits CPRI signals between a BBU and an RRU.

Procedure

Step 1 Lower the pullers of two optical modules, insert one optical module into the CPRI0 port on the RRU and the other optical module into the CPRI port on the BBU, and raise the pullers, as shown in **Figure 7-24**.

Figure 7-24 Installing an optical module

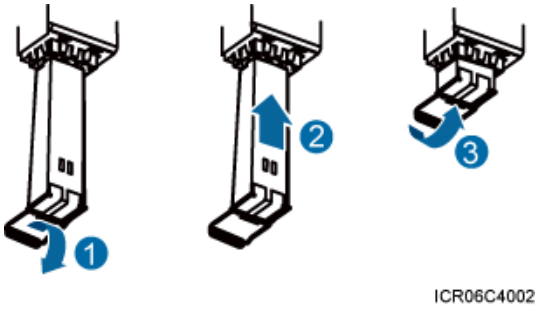

NOTICE

The performance of an optical module that is exposed to the air for more than 20 minutes may be abnormal. Therefore, you must insert an fiber optic cable into an unpacked optical module within 20 minutes.

Step 2 Connect the end labeled 1A and 1B of the optical cable to the optical module on the RRU side, as shown in **Figure 7-25**.

Copyright © Huawei Technologies Co., Ltd.

Figure 7-25 Installing a CPRI optical cable

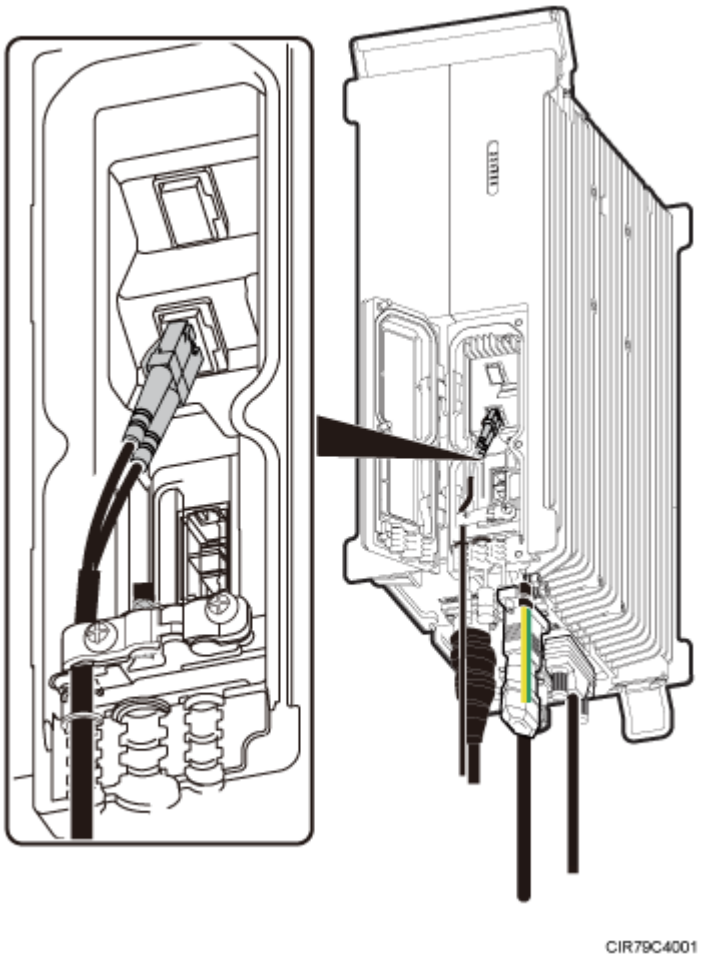

NOTICE

To avoid any damage to optical cables, the cables connected to the RRU must be installed according to the installation process. For details about the installation process, see **7.3 Installing RRU Cables**.

Step 3 Connect the end labeled 2A and 2B of the optical cable to the optical module on the BBU side.

Step 4 Route the cables according to the instructions in Cabling Requirements, and then use cable ties to bind the cables.

Step 5 Label the installed cables according to the instructions in Attaching an L-Shaped Label.

----End

7.11 Installing an RRU Power Cable

This section describes the procedure for installing an RRU power cable.

Copyright © Huawei Technologies Co., Ltd.

Prerequisites

- A tool-less female connector (pressfit type) is added to the RRU power cable on the RRU side. For details, see **10.1 Adding a Tool-Less Female Connector (Pressfit Type) to the RRU Power Cable on the RRU Side**.
- A connector or OT terminals are added to the RRU power cable on the power device side. For details, see *DBS3900 Installation Guide*.

Context

If a power device provided by the customer is used, the recommended specification of the circuit breaker on this power device is 15 A to 30 A.

Table 7-2 describes the RRU power cable.

Table 7-2 RRU power cable

Cable	On the RRU Side	On the Power Device Side	Power Device	Color
RRU power cable	Tool-less female connector (pressfit type)	Tool-less female connector (pressfit type)	EPU	A cable with a black jacket and two wires inside ● North American standards: The RTN(+) wire is black and the NEG(-) wire is blue. ● European standards: The RTN (+) wire is brown and the NEG (-) wire is blue.
			DCDU-11B	
		EPC5 connector	DCDU-12B	

CAUTION

- Before installing the RRU power cable, ensure that the upper-level circuit breaker is switched off and the power cable has no voltage.
- A drip loop is required for the position between the RRU port and the cable, preventing rain from damaging the RRU.
- When installing the RRU power cable, connect the power cable to the RRU connector first and then to the power equipment connector. Incorrect connection sequence or reverse connection of positive and negative poles may damage the RRU or cause personal injury.

Procedure

Step 1 Connect the tool-less female connector (pressfit type) at one end of the RRU power cable to the power supply socket on the RRU, as shown in **Figure 7-26**.

Copyright © Huawei Technologies Co., Ltd.

Figure 7-26 Installing an RRU power cable

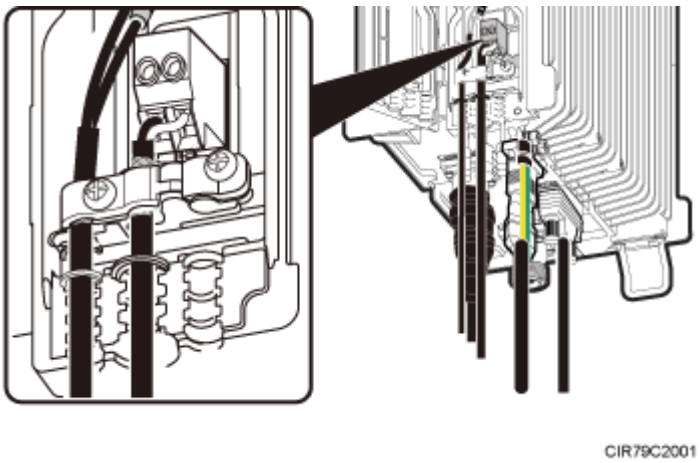

NOTICE

Ensure that the exposed shield layer of the power cable is properly tightened using the clip.

Step 2 Connect the connector at the other end of the RRU power cable to the corresponding position on the power device.

NOTE

- A DCDU-11B/DCDU-12B can supply power to a maximum of six RRUs. Ensure that the RRU power cable is connected to one of **LOAD0** to **LOAD5** ports on the DCDU-11B/DCDU-12B.
- One EPU can supply power to a maximum of six RRUs. Ensure that the RRU power cable is connected to one of **RRU0** to **RRU5** ports on the EPU.
- When the RRU power cable is connected to the EPU, the blue core wire in the tool-less female connector (pressfit type) is connected to the upper port on the EPU, and the black/brown core wire is connected to the lower port on the EPU.

Step 3 Route the cables according to the instructions in Cabling Requirements, and then use cable ties to bind the cables.

Step 4 Label the installed cables according to the instructions in Attaching a Cable-Tying Label.

----End

7.12 Closing the Cover Plate of an RRU Cabling Cavity

This section describes the procedure for closing the cover plate of an RRU cabling cavity.

Procedure

Step 1 Close the clips for the installed cables. Use an M4 torque screwdriver to tighten the screws on each clip to 1.4 N·m (12.39 lbf·in.), as shown in **Figure 7-27**.

Copyright © Huawei Technologies Co., Ltd.

NOTICE

Ensure that the exposed shield layer of the power cable is properly tightened using the clip.

Figure 7-27 Closing clips

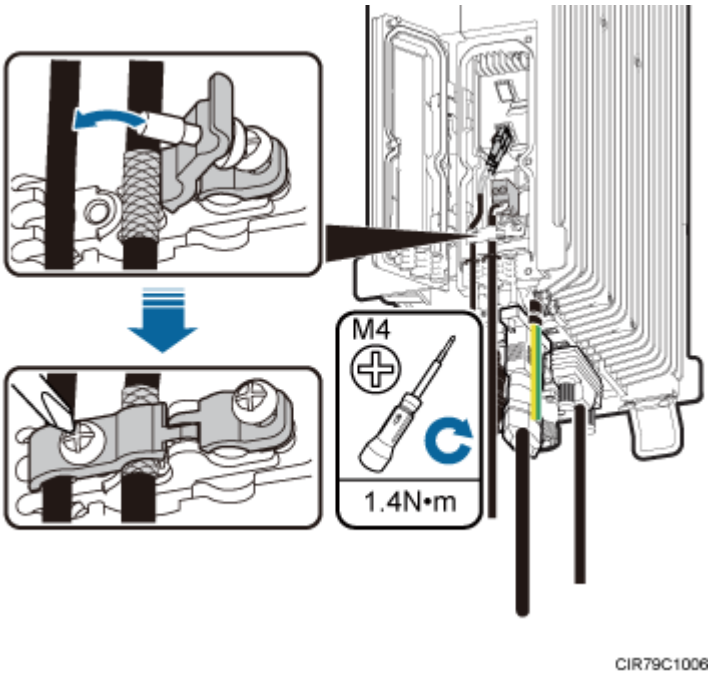

Step 2 Insert waterproof blocks into vacant cable troughs in the cabling cavity, as shown in **Figure 7-28**.

NOTICE

Ensure that cables and waterproof blocks are properly inserted into troughs.

Copyright © Huawei Technologies Co., Ltd.

Figure 7-28 Correct placement of waterproof blocks

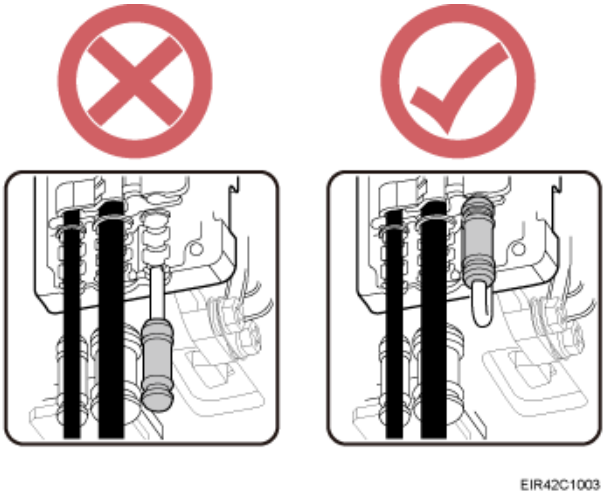

Step 3 Close the cover plate of the RRU cabling cavity. Use an M5 torque screwdriver to partially tighten the screws on the cover plate in the sequence shown in **Figure 7-29**. Then tighten the screws to 2 N·m (17.7 lbf·in.) in the same sequence.

NOTICE

The RRU cabling cavity must be securely tightened to prevent water.

Figure 7-29 Closing the cover plate of an RRU cabling cavity

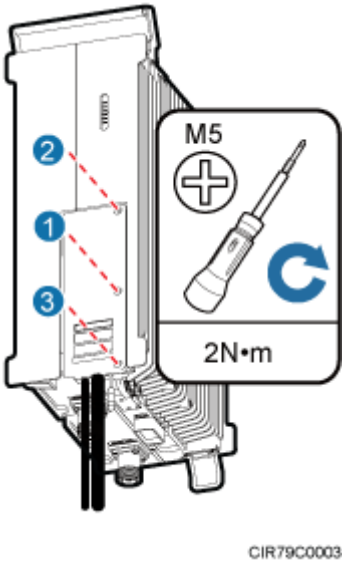

Copyright © Huawei Technologies Co., Ltd.

Step 4 Take off the ESD gloves, and pack up all the tools.

----End

Copyright © Huawei Technologies Co., Ltd.

8 Checking the RRU Hardware Installation

After an RRU is installed, check the hardware installation.

Table 8-1 provides the checklist for the RRU hardware installation.

Table 8-1 Checklist for the RRU hardware installation

SN	Item
1	The position for each device conforms to the engineering drawing and meets the space requirement. Sufficient space is reserved for equipment maintenance.
2	The RRU is securely installed.
3	The cover plate is securely installed on the RRU cabling cavity.
4	Waterproof blocks are securely installed in vacant cable troughs of the RRU cabling cavity, and the cover plate for the cabling cavity is securely installed. In addition, vacant RF ports are covered with dustproof caps and the caps are tightened.
5	There are no connectors or joints on each power cable or PGND cable.
6	The terminals at two ends of each power cable or PGND cable are securely soldered or crimped.
7	None of power cables and PGND cables can be short-circuited or reversely connected. In addition, these cables are not damaged or broken.
8	Power cables and PGND cables are separately bound from other cables.
9	The protection grounding of the RRU and the surge protection grounding of the building share one group of ground conductors.
10	The connectors of each signal cable are intact and securely linked, and these cables are not damaged or broken.
11	Labels are correct, legible, and complete at both ends of each cable, feeder, and jumper.
12	All ground cables are properly grounded.

Copyright © Huawei Technologies Co., Ltd.

9 Powering On an RRU

After all the devices are installed, check the power-on status of an RRU.

NOTICE

After you unpack an RRU, you must power on it within 24 hours. If you power off the RRU for maintenance, you must restore power to the RRU within 24 hours.

Figure 9-1 shows the RRU power-on check process.

NOTE

For details about how to power on an RRU, see Powering On an RRU. For details about how to power off an RRU, see section "Powering-Off the RRU" in *RRU Maintenance Guide*.

Copyright © Huawei Technologies Co., Ltd.

Figure 9-1 RRU power-on check process

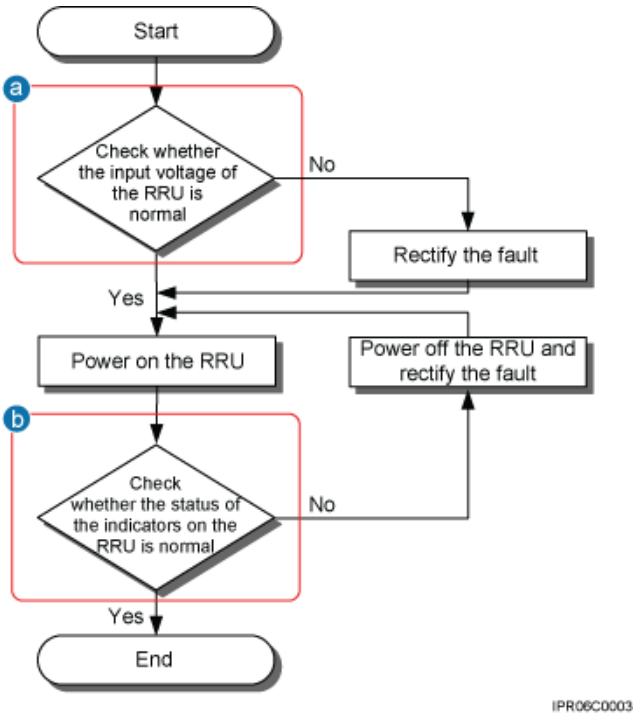

(a) The normal input voltage of an RRU is -48 V DC. The voltage of the external power supply should range from -36 V DC to -57 V DC.

(b) The RUN indicator on the RRU is on for 1s and off for 1s. The ALM indicator is steady off.

Copyright © Huawei Technologies Co., Ltd.

10 Appendix

About This Chapter

10.1 Adding a Tool-Less Female Connector (Pressfit Type) to the RRU Power Cable on the RRU Side
This section describes the procedure for adding a tool-less female connector (pressfit type) to the RRU power cable on the RRU side.

Copyright © Huawei Technologies Co., Ltd.

10.1 Adding a Tool-Less Female Connector (Pressfit Type) to the RRU Power Cable on the RRU Side

This section describes the procedure for adding a tool-less female connector (pressfit type) to the RRU power cable on the RRU side.

Context

Figure 10-1 shows the cable diagram on labels.

Figure 10-1 Cable diagram on labels

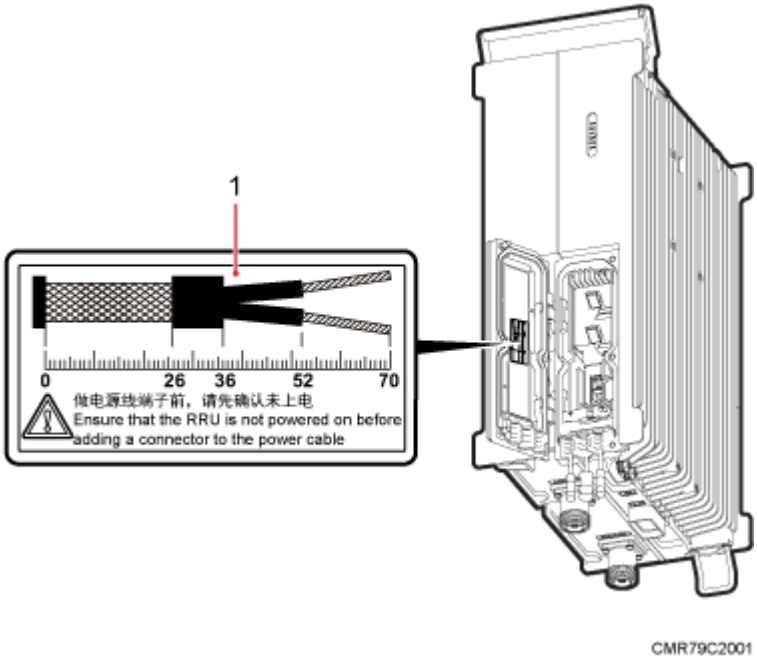

(1) Cable diagram on labels

NOTICE

Prepare a Tool-Less Female Connector (Pressfit Type) to the RRU Power Cable on the RRU Side by strictly following the following operations. Otherwise, damage to the RRU or personal injury may occur.

Procedure

Step 1 Determine the length of the power cable for different operations based on the labels, as shown in **Figure 10-2**.

Copyright © Huawei Technologies Co., Ltd.

Figure 10-2 Determining the length of the power cable

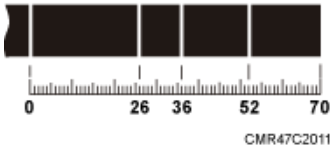

Step 2 Strip the specified length of the sheath off the power cable, as shown in **Figure 10-3**.

Figure 10-3 Stripping the specified length of sheath

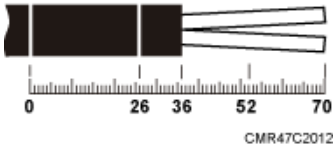

Step 3 Strip a specified length of sheath off each core wire. The length must be consistent with the length of the notch in the tool-less female connector (pressfit type), as shown in **Figure 10-4**.

Figure 10-4 Stripping the sheath off each core wire

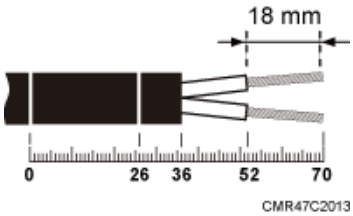

Figure 10-5 Matched length

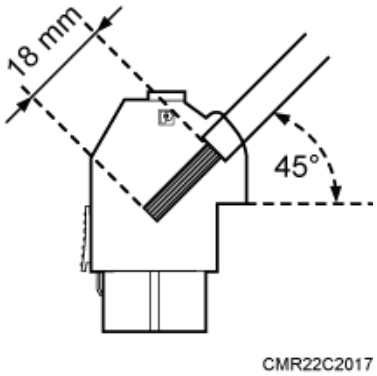

Step 4 Add a tool-less female connector (pressfit type) to two core wires.

Copyright © Huawei Technologies Co., Ltd.

1. Tighten the screws using a Phillips screwdriver, as shown in **Figure 10-6**.

Figure 10-6 Tightening screws

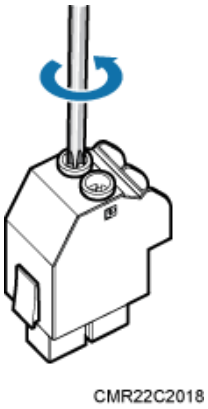

2. Connect the blue core wire labeled NEG(-) to the **-** port and the black/brown core wire labeled RTN(+) to the **+** port on the tool-less female connector (pressfit type), and then tighten the screws using a Phillips screwdriver, and then use a torque screwdriver to tighten the M4 screws to 1.4 N·m (12.39 lbf·in.), as shown in **Figure 10-7**.

DANGER

Do not reversely connect the positive and negative poles. Reverse connection of positive and negative poles may result in equipment malfunctions or personal injury. Therefore, check the power cable connection before powering on the RRU.

Figure 10-7 Adding a tool-less female connector (pressfit type) to two core wires

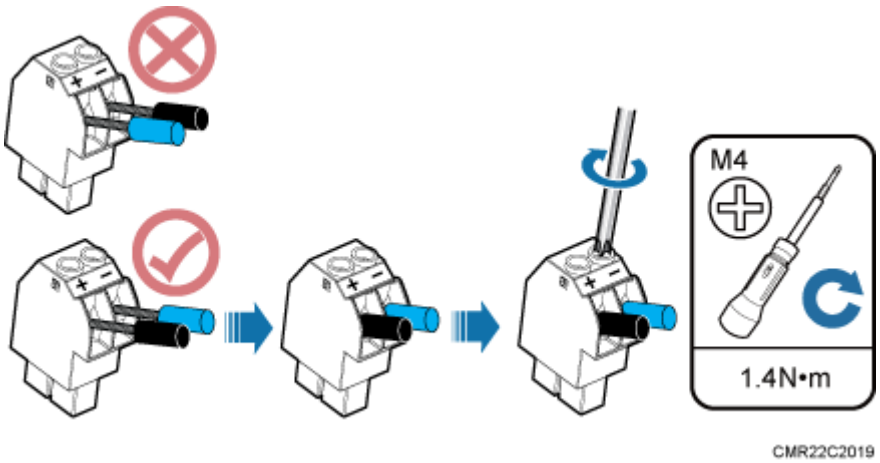

3. After the core wires are installed, ensure that each core wire is securely installed after being dragged with a torque of 30 N•m and all copper wires are inserted in the connector terminal socket.

Copyright © Huawei Technologies Co., Ltd.

Step 5 Strip the specified length of the sheath off the power cable to expose the intact shield layer, as shown in **Figure 10-8**.

Figure 10-8 Stripping the sheath off the power cable

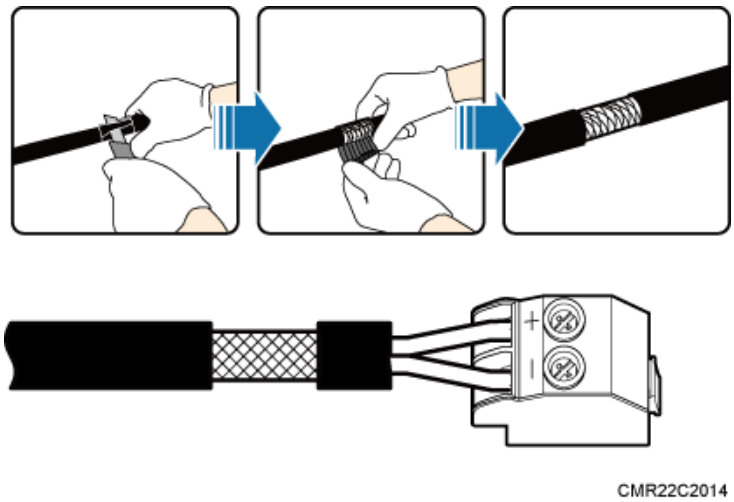

NOTICE

Each core wire is exposed outside the tool-less female connector (pressfit type) for 1.5 mm (0.059 [in.]), as shown in **Figure 10-9**.

Figure 10-9 Inserting core wires into the tool-less female connector (pressfit type)

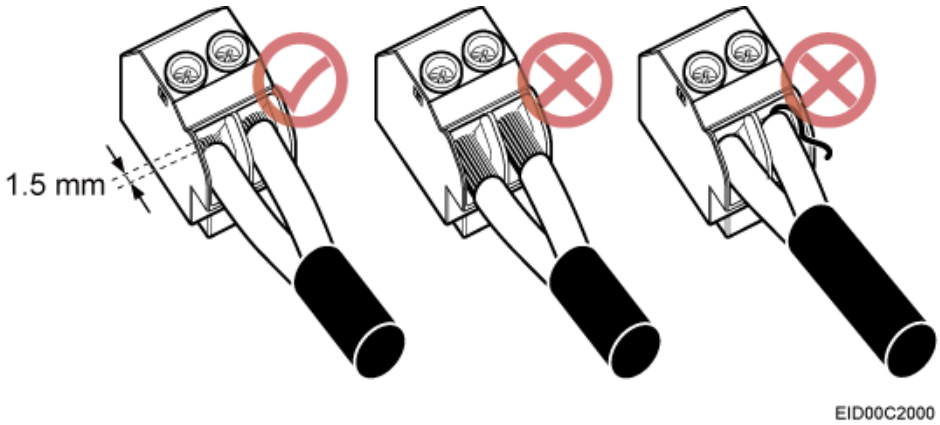

----End

Copyright © Huawei Technologies Co., Ltd.