RRU3268

Installation Guide

Issue

Date

HUAWEI TECHNOLOGIES CO., LTD.

Copyright © Huawei Technologies Co., Ltd. 2013. All rights reserved.

No part of this document may be reproduced or transmitted in any form or by any means without prior written consent of Huawei Technologies Co., Ltd.

Trademarks and Permissions

HUAWEI and other Huawei trademarks are trademarks of Huawei Technologies Co., Ltd.
All other trademarks and trade names mentioned in this document are the property of their respective holders.

Notice

The purchased products, services and features are stipulated by the contract made between Huawei and the customer. All or part of the products, services and features described in this document may not be within the purchase scope or the usage scope. Unless otherwise specified in the contract, all statements, information, and recommendations in this document are provided "AS IS" without warranties, guarantees or representations of any kind, either express or implied.

The information in this document is subject to change without notice. Every effort has been made in the preparation of this document to ensure accuracy of the contents, but all statements, information, and recommendations in this document do not constitute a warranty of any kind, express or implied.

Huawei Technologies Co., Ltd.

Address: Huawei Industrial Base
Bantian, Longgang
Shenzhen 518129
People's Republic of China

Website: http://www.huawei.com

Email: support@huawei.com

About This Document

Purpose

This document describes the process of installing a DC RRU3268 (referred to as RRU in this document).

Product Versions

The following table lists the product versions related to this document.

Product Name	Product Version
DBS3900	V100R008C00 and later versions
DBS3900 LTE	V100R006C00 and later versions

Intended Audience

This document is intended for:

Base station installation engineers

Organization

1 Changes in the RRU3268 Installation Guide

This chapter describes the changes in the *RRU3268 Installation Guide*.

2 Installation Preparations

This chapter describes the reference documents, tools, and instruments that must be ready before the installation. In addition, it specifies the skills and prerequisites that installation engineers must have.

3 Information About the Installation

Before installing an RRU, you must be familiar with its exterior, ports, indicators, installation options and installation clearance requirements.

4 Unpacking the Equipment

Copyright © Huawei Technologies Co., Ltd.

This chapter describes how to unpack and check the delivered equipment to ensure that all the materials are included and intact.

5 Installation Process

The installation process involves installing an RRU and RRU cables, checking the RRU hardware installation, and powering on the RRU.

6 (Optional) Installing the Plastic Shells of the RRU

This section describes the procedure for installing the plastic shells of the RRU.

7 Hoisting an RRU and Related Cables onto a Tower

This section describes the procedure for hoisting an RRU and related cables onto a tower and the precautions that must be taken.

8 Installing the RRU

This chapter describes the procedure for installing the RRU. The RRU can be installed on a pole, U-steel, angle steel, wall, or an IFS06 . The procedure for installing the RRU varies depending on installation options.

9 Installing RRU Cables

This chapter describes the procedure for installing RRU cables.

10 Checking the RRU Hardware Installation

After an RRU is installed, check the hardware installation.

11 Powering On an RRU

After all the devices are installed, check the power-on status of an RRU.

12 Appendix

This section describes the procedure for adding an easy power receptacle (pressfit type) connector.

Conventions

Symbol Conventions

The symbols that may be found in this document are defined as follows.

Symbol	Description
DANGER	Indicates a hazard with a high level or medium level of risk which, if not avoided, could result in death or serious injury.
WARNING	Indicates a hazard with a low level of risk which, if not avoided, could result in minor or moderate injury.
CAUTION	Indicates a potentially hazardous situation that, if not avoided, could result in equipment damage, data loss, performance deterioration, or unanticipated results.

Copyright © Huawei Technologies Co., Ltd.

Symbol	Description
TIP	Indicates a tip that may help you solve a problem or save time.
NOTE	Provides additional information to emphasize or supplement important points of the main text.

General Conventions

The general conventions that may be found in this document are defined as follows.

Convention	Description
Times New Roman	Normal paragraphs are in Times New Roman.
Boldface	Names of files, directories, folders, and users are in **boldface**. For example, log in as user **root**.
Italic	Book titles are in *italics*.
`Courier New`	Examples of information displayed on the screen are in Courier New.

Command Conventions

The command conventions that may be found in this document are defined as follows.

Convention	Description
Boldface	The keywords of a command line are in **boldface**.
Italic	Command arguments are in *italics*.
[ ]	Items (keywords or arguments) in brackets [ ] are optional.
{ x | y | ... }	Optional items are grouped in braces and separated by vertical bars. One item is selected.
[x | y | ...]	Optional items are grouped in brackets and separated by vertical bars. One item is selected or no item is selected.
{ x | y | ... }*	Optional items are grouped in braces and separated by vertical bars. A minimum of one item or a maximum of all items can be selected.
[x | y | ...]*	Optional items are grouped in brackets and separated by vertical bars. Several items or no item can be selected.

GUI Conventions

The GUI conventions that may be found in this document are defined as follows.

Copyright © Huawei Technologies Co., Ltd.

Convention	Description
Boldface	Buttons, menus, parameters, tabs, window, and dialog titles are in **boldface**. For example, click **OK**.
>	Multi-level menus are in **boldface** and separated by the ">" signs. For example, choose **File** > **Create** > **Folder**.

Keyboard Operations

The keyboard operations that may be found in this document are defined as follows.

Format	Description
Key	Press the key. For example, press **Enter** and press **Tab**.
Key 1+**Key 2**	Press the keys concurrently. For example, pressing **Ctrl**+**Alt** +**A** means the three keys should be pressed concurrently.
Key 1, **Key 2**	Press the keys in turn. For example, pressing **Alt**, **A** means the two keys should be pressed in turn.

Mouse Operations

The mouse operations that may be found in this document are defined as follows.

Action	Description
Click	Select and release the primary mouse button without moving the pointer.
Double-click	Press the primary mouse button twice continuously and quickly without moving the pointer.
Drag	Press and hold the primary mouse button and move the pointer to a certain position.

Copyright © Huawei Technologies Co., Ltd.

Contents

About This Document....ii
1 Changes in the RRU3268 Installation Guide....1
2 Installation Preparations....2
2.1 Reference Documents....3
2.2 Tools and Instruments....3
2.3 Skills and Requirements for Onsite Personnel....5
3 Information About the Installation....6
3.1 RRU Exterior....7
3.2 RRU Ports....8
3.3 RRU Indicators....9
3.4 Installation Scenarios....11
3.5 Installation Clearance Requirements of an RRU....21
3.5.1 Clearance for a Single RRU....21
3.5.2 Clearance for Multiple RRUs....24
3.5.3 Installation Spacing Between RRUs....28
4 Unpacking the Equipment....31
5 Installation Process....33
6 (Optional) Installing the Plastic Shells of the RRU....34
7 Hoisting an RRU and Related Cables onto a Tower....37
7.1 Hoisting an RRU onto a Tower....38
7.2 Hoisting Fiber Optic Cables onto a Tower....42
7.3 Hoisting Power Cables onto a Tower....45
8 Installing the RRU....49
8.1 Mounting Kits for an RRU....50
8.2 Installing the RRU on a Pole....51
8.2.1 Installing a Single RRU....51
8.2.2 Installing Two RRUs....54
8.2.3 Installing Three or More RRUs....58
8.3 Installing the RRU on U-steel....63
8.4 Installing the RRU on Angle Steel....68

Copyright © Huawei Technologies Co., Ltd.

8.5 Installing the RRU on a Wall....73
8.6 Installing an RRU on an IFS06....79
9 Installing RRU Cables....87
9.1 Cabling Requirements....89
9.2 Cable Connections....94
9.3 Installation Process....96
9.4 RRU Cable List....97
9.5 Installing an RRU PGND Cable....99
9.6 Installing an RRU RF Jumper....100
9.7 Installing an RRU AISG Multi-Wire Cable and AISG Extension Cable....103
9.8 Installing an RRU Alarm Cable....106
9.9 Opening the Cover Plate of an RRU Cabling Cavity....107
9.10 Installing an RRU Power Cable....108
9.11 Installing a CPRI Fiber Optic Cable....110
9.12 Closing the Cover Plate of an RRU Cabling Cavity....112
10 Checking the RRU Hardware Installation....116
11 Powering On an RRU....117
12 Appendix....119
12.1 Adding a Tool-Less Female Connector (Pressfit Type) to the RRU Power Cable on the RRU Side....120

Copyright © Huawei Technologies Co., Ltd.

1 Changes in the RRU3268 Installation Guide

This chapter describes the changes in the *RRU3268 Installation Guide*.

01 (2013-03-18)

This is the first official release.

Copyright © Huawei Technologies Co., Ltd.

2 Installation Preparations

About This Chapter

This chapter describes the reference documents, tools, and instruments that must be ready before the installation. In addition, it specifies the skills and prerequisites that installation engineers must have.

2.1 Reference Documents
Before the installation, you must be familiar with reference documents.

2.2 Tools and Instruments
All tools and instruments required for RRU installation must be ready before the installation.

2.3 Skills and Requirements for Onsite Personnel
Onsite personnel must be qualified and trained. Before performing any operation, onsite personnel must be familiar with correct operation methods and safety precautions.

Copyright © Huawei Technologies Co., Ltd.

2.1 Reference Documents

Before the installation, you must be familiar with reference documents.

The following reference documents are required during RRU installation:

- RRU3268 Hardware Description
- DBS3900 Installation Guide
- OCB User Guide

2.2 Tools and Instruments

All tools and instruments required for RRU installation must be ready before the installation.

Hammer drill (a φ 12 bit) 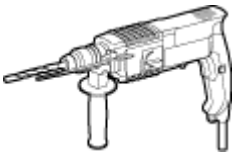	ESD gloves 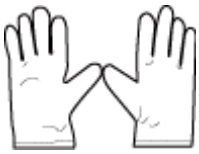	Vacuum cleaner
Heat gun	Phillips screwdriver (M3 to M6) 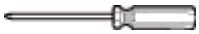	Flat-head screwdriver (M3 to M6)
Rubber mallet	COAX crimping tool	Wire stripper 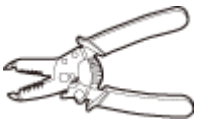

Copyright © Huawei Technologies Co., Ltd.

Utility knife 	Cable cutter 	Adjustable wrench (capacity ⩾ 32 mm [1.26 in.]) Torque wrench Capacity: 16 mm [0.63 in.], and 32 mm [1.26 in.] Combination wrench Capacity: 16 mm [0.63 in.], and 32 mm [1.26 in.]
Level 	Torque screwdriver 5 mm (0.2 in.) 5 mm (0.2 in.) (M3 to M6) (M3 to M6)	Torque socket 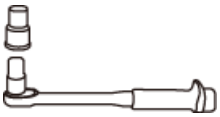
Multimeter 	Marker (diameter ⩽ 10 mm [0.39 in.]) 	Measuring tape
Inner hexagon spanner 5 mm (0.2 in.)	Fixed pulley 	Rope 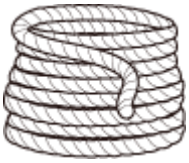
Hydraulic pliers 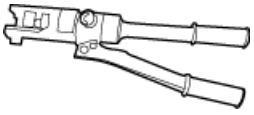	-	-

Copyright © Huawei Technologies Co., Ltd.

2.3 Skills and Requirements for Onsite Personnel

Onsite personnel must be qualified and trained. Before performing any operation, onsite personnel must be familiar with correct operation methods and safety precautions.

Before the installation, pay attention to the following items:

- The customer's technical engineers must be trained by Huawei and be familiar with the proper installation and operation methods.
- The number of onsite personnel depends on the engineering schedule and installation environment. Generally, only three to five onsite personnel are necessary.

Copyright © Huawei Technologies Co., Ltd.

3 Information About the Installation

About This Chapter

Before installing an RRU, you must be familiar with its exterior, ports, indicators, installation options and installation clearance requirements.

3.1 RRU Exterior
This section describes the exterior and dimensions of an RRU.

3.2 RRU Ports
This section describes ports on the RRU panels. An RRU has a bottom panel, cabling cavity panel, and indicator panel.

3.3 RRU Indicators
This section describes six indicators on an RRU. They indicate the running status.

3.4 Installation Scenarios
An RRU can be installed on a pole, U-steel, angle steel, or IFS06. Installation scenarios must meet heat-dissipation and waterproofing requirements of the RRU.

3.5 Installation Clearance Requirements of an RRU
This section describes the requirements for the installation clearance of a single RRU and multiple RRUs and the requirements for the installation spacing between RRUs.

Copyright © Huawei Technologies Co., Ltd.

3.1 RRU Exterior

This section describes the exterior and dimensions of an RRU.

Figure 3-1 shows an RRU.

Figure 3-1 RRU exterior

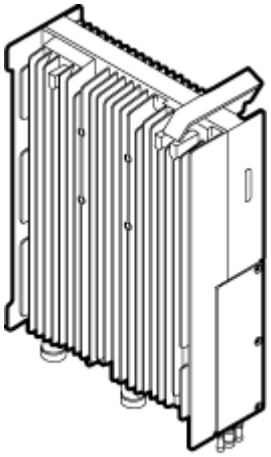

Figure 3-2 shows RRU dimensions.

Figure 3-2 RRU dimensions

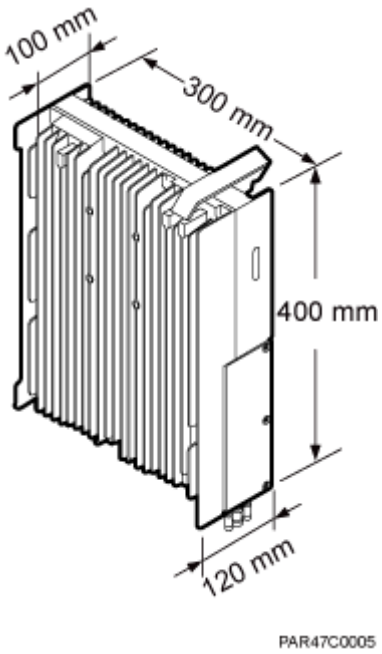

Copyright © Huawei Technologies Co., Ltd.

3.2 RRU Ports

This section describes ports on the RRU panels. An RRU has a bottom panel, cabling cavity panel, and indicator panel.

Figure 3-3 shows the ports on the RRU panels.

Figure 3-3 Ports on the RRU panels

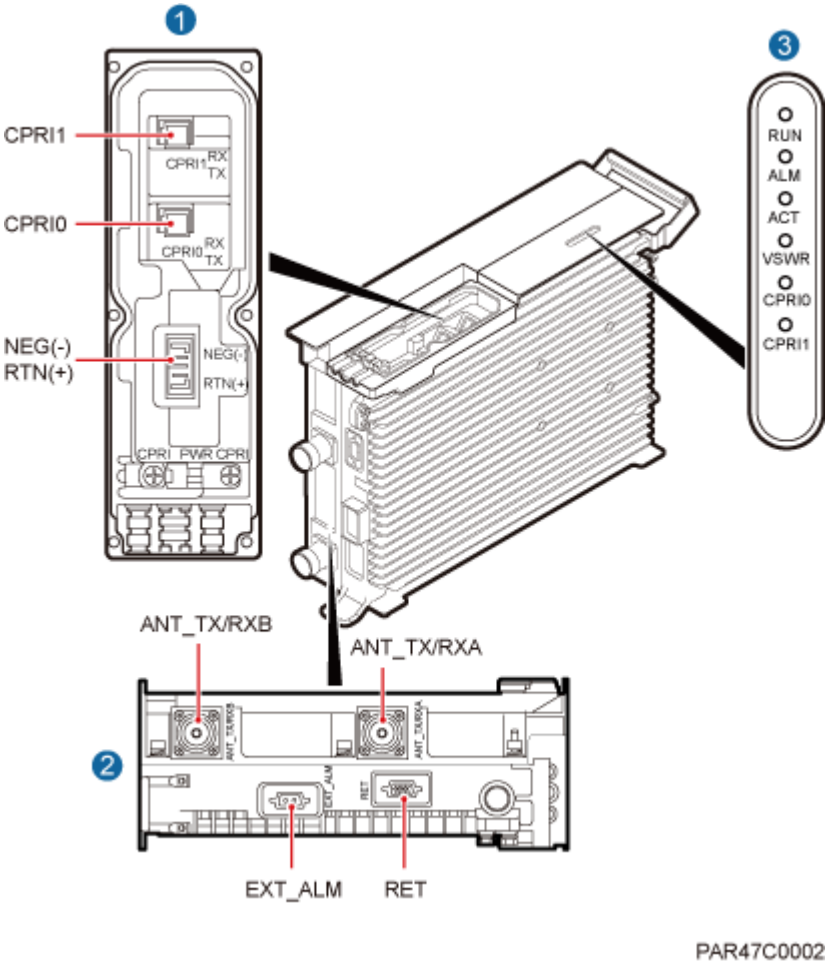

Table 3-1 describes ports and indicators on the RRU panels.

Table 3-1 RRU ports and indicators on the panels

Item	Silkscreen	Description
(1) Ports in the cabling cavity	RTN(+)	Power port
	NEG(-)	
	CPRI0	Optical/electrical port 0

Copyright © Huawei Technologies Co., Ltd.

Item	Silkscreen	Description
	CPRI1	Optical/electrical port 1
(2) Ports at the bottom	ANT_TX/RXA	TX/RX port A, supporting RET signal transmission
	ANT_TX/RXB	TX/RX port B
	EXT_ALM	Alarm port
	RET	Communication port for the RET antenna, supporting RET signal transmission
(3) Indicators	RUN	For details, see **3.3 RRU Indicators**.
	ALM	
	ACT	
	VSWR	
	CPRI0	
	CPRI1	

3.3 RRU Indicators

This section describes six indicators on an RRU. They indicate the running status.

For detailed positions of RRU indicators, see **3.2 RRU Ports**.

Table 3-2 describes RRU indicators.

Table 3-2 RRU indicators

Indicator	Color	Status	Meaning
RUN	Green	Steady on	There is power supply, but the module is faulty.
		Steady off	There is no power supply, or the module is faulty.
		Blinking (on for 1s and off for 1s)	The board is functioning properly.
		Blinking (on for 0.125s and off for 0.125s)	Software is being loaded to the module, or the module is not started.
ALM	Red	Steady on	Alarms are generated, and the module must be replaced.

Copyright © Huawei Technologies Co., Ltd.

Indicator	Color	Status	Meaning
		Blinking (on for 1s and off for 1s)	Alarms are generated. The alarms may be caused by the faults on the related boards or ports. Therefore, you need to locate the fault before deciding whether to replace the module.
		Steady off	No alarm is generated.
ACT	Green	Steady on	The module is running properly with TX channels enabled or the software is being loaded without RRU running.
		Blinking (on for 1s and off for 1s)	The module is running properly with TX channels disabled.
VSWR	Red	Steady off	No Voltage Standing Wave Ratio (VSWR) alarm is generated.
		Blinking (on for 1s and off for 1s)	VSWR alarms are generated on the ANT_TX/RXB port.
		Steady on	VSWR alarms are generated on the ANT_TX/RXA port.
		Blinking (on for 0.125s and off for 0.125s)	VSWR alarms are generated on the ANT_TX/RXA and ANT_TX/RXB ports.
CPRI0	Red or green	Steady green	The CPRI link is functioning properly.
		Steady red	An optical module fails to transmit or receive signals because the optical module is faulty or the fiber optic cable is broken.
		Blinking red (on for 1s and off for 1s)	The CPRI link is out of lock because of a failure in clock lock between two modes or mismatched data rates over CPRI ports.
		Steady off	The optical module cannot be detected, or the optical module is powered off.
CPRI1	Red or green	Steady green	The CPRI link is functioning properly.
		Steady red	An optical module fails to transmit or receive signals because the optical module is faulty or the fiber optic cable is broken.
		Blinking red (on for 1s and off for 1s)	The CPRI link is out of lock because of a failure in clock lock between two modes or mismatched data rates over CPRI ports.
		Steady off	The optical module cannot be detected, or the optical module is powered off.

Copyright © Huawei Technologies Co., Ltd.

3.4 Installation Scenarios

An RRU can be installed on a pole, U-steel, angle steel, or IFS06. Installation scenarios must meet heat-dissipation and waterproofing requirements of the RRU.

Requirements for the Installation Scenarios

Application scenarios:

To ensure proper heat dissipation of the RRU, the following requirements must be met:

- The RRU cannot be installed in an enclosed cabinet without a cooling system.
- The RRU cannot be installed in an enclosed camouflage box.
- The RRU cannot be installed in an enclosed equipment room without a cooling system.
- When multiple RRUs are installed in centralized mode, the minimum clearance requirements must be met. For details about the minimum clearance requirements, see **3.5.2 Clearance for Multiple RRUs** and **3.5.3 Installation Spacing Between RRUs**.

CAUTION

In improper installation scenarios, the heat dissipation efficiency decreases and therefore the RRU may not work properly. **Figure 3-4** shows an improper installation scenario.

Figure 3-4 Improper installation scenario

Method of installation:

- To ensure proper heat dissipation and waterproofing of the RRU, the RRU must be installed with the ports at the bottom and the vertical deviation angle of the RRU must be less than or equal to 10 degrees, as shown in **Figure 3-5**.
- The side-mounted mode is recommended for RRUs on the main pole secured on a tower. This installation mode allows multiple RRUs to be installed next to each other at the same

Copyright © Huawei Technologies Co., Ltd.

level on a pole. When the horizontal distance between the main and auxiliary poles on a tower is equal to or greater than 810 mm (23.62 in.), the side-mounted mode is recommended for installing RRUs on the auxiliary pole to meet the minimum clearance requirements. Otherwise, the standard mode is recommended for installing RRUs on the auxiliary pole.

Figure 3-5 Requirements for the vertical deviation angle of an RRU

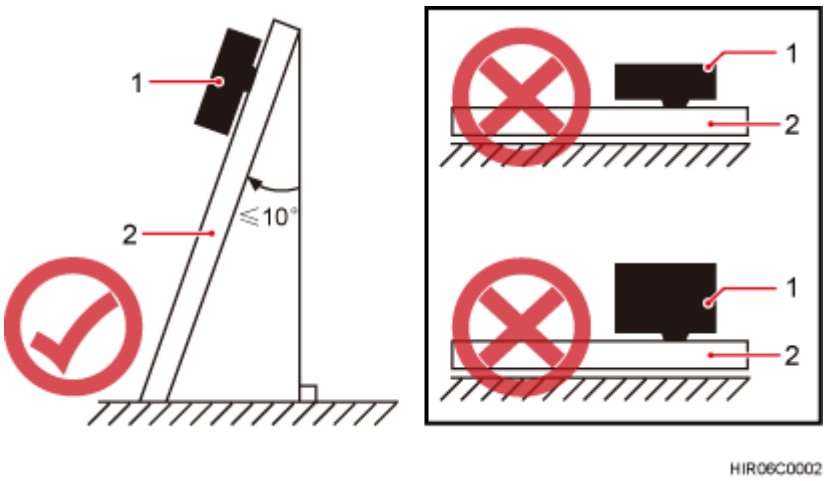

(1) RRU (2) Installation support (pole, U-steel, angle steel, or wall)

Installing an RRU on a Pole

Figure 3-6 shows the diameter of a pole for installing an RRU.

Figure 3-6 Diameter of a pole

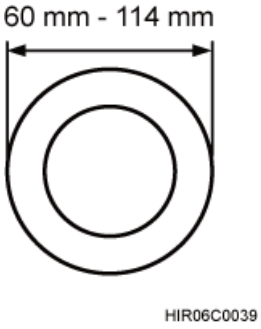

CAUTION

- The diameter of a pole for installing an RRU ranges from 60 mm (2.36 in.) to 114 mm (4.49 in.). The recommended diameter is 80 mm (3.15 in.).

Copyright © Huawei Technologies Co., Ltd.

Figure 3-7 shows a single RRU installed on a pole.

Figure 3-7 A single RRU installed on a pole

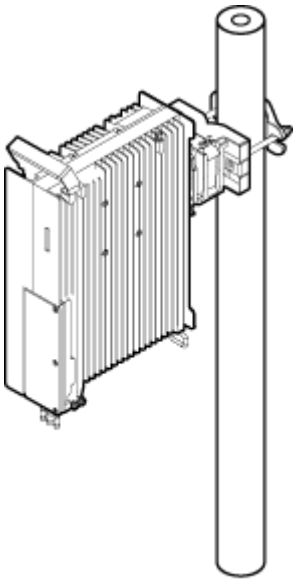

SRR46C0010

Figure 3-8 shows two RRUs installed on a pole.

Figure 3-8 Two RRUs installed on a pole

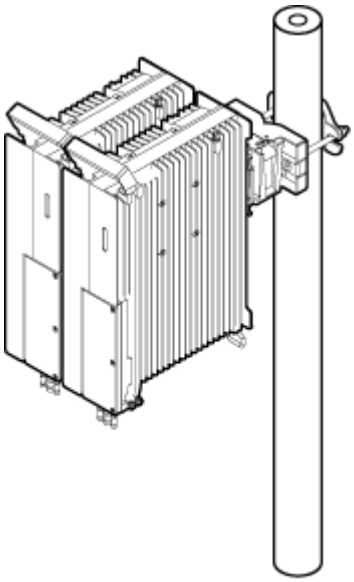

SRR46C0011

Figure 3-9, **Figure 3-10**, and **Figure 3-11** show three or more RRUs installed on a pole.

Copyright © Huawei Technologies Co., Ltd.

Figure 3-9 Three RRUs installed on a pole

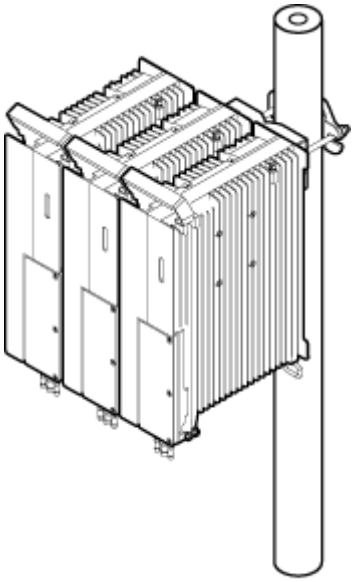

SRR46C0012

Figure 3-10 Four RRUs installed on a pole

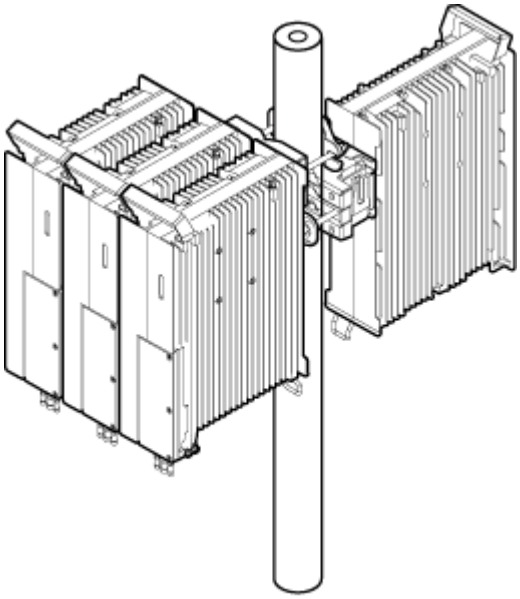

SRR47C0013

Copyright © Huawei Technologies Co., Ltd.

Figure 3-11 Six RRUs installed on a pole

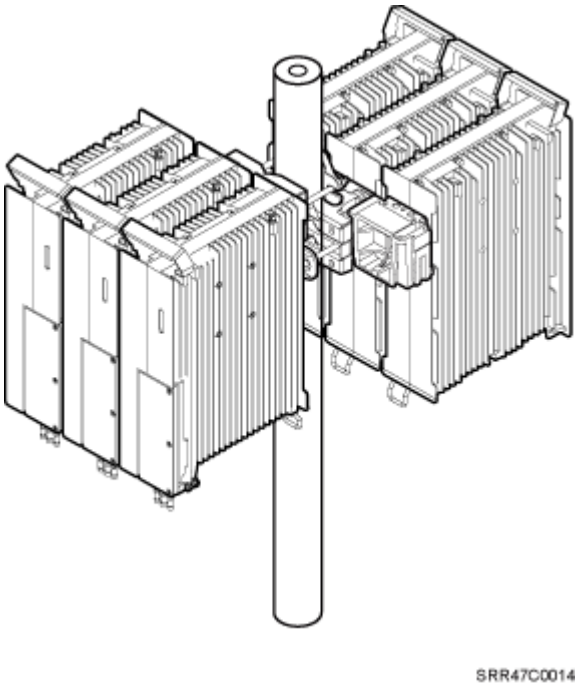

Installing an RRU on U-steel

Figure 3-12 shows U-steel specifications.

Figure 3-12 U-steel specifications

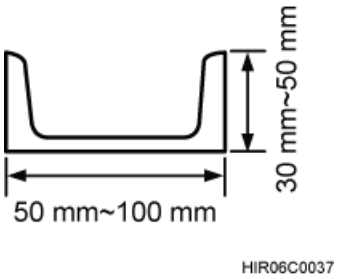

CAUTION

U-steel supports the standard or reverse installation of a single RRU only.

Figure 3-13 shows an RRU installed on U-steel.

Copyright © Huawei Technologies Co., Ltd.

Figure 3-13 RRU installed on U-steel

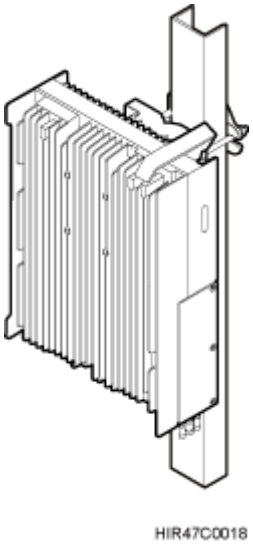

Installing an RRU on Angle Steel

Figure 3-14 shows angle steel specifications.

Figure 3-14 Angle steel specifications

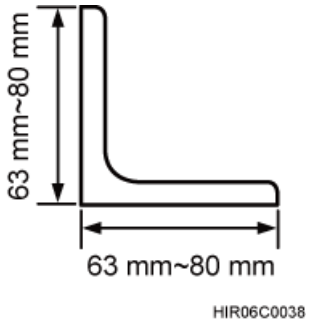

CAUTION

Angle steel supports the standard or reverse installation of a single RRU only.

Figure 3-15 shows an RRU installed on angle steel.

Copyright © Huawei Technologies Co., Ltd.

Figure 3-15 RRU installed on angle steel

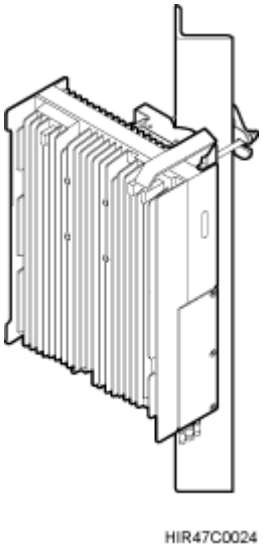

Installing an RRU on a Wall

The wall for installing RRUs must meet the following requirements:

- When a single RRU is installed, the wall has a capacity of bearing at least four times the weight of the RRU.
- Expansion anchor bolts must be tightened to 30 N·m (265.52 lbf·in.) so that the bolts stay secured without damaging the wall.

CAUTION

- It is recommended that the RRU be installed on a wall in standard mode.
- When multiple RRUs are installed on an outdoor wall in side-mounted mode, it is recommended that the mounting brackets not be combined, as shown in **Figure 3-16**. When multiple RRUs are installed on an indoor wall in side-mounted mode, the mounting brackets cannot be combined, as shown in **Figure 3-17**.

Figure 3-16 Correct installation of mounting brackets for multiple RRUs installed on an outdoor wall in side-mounted mode

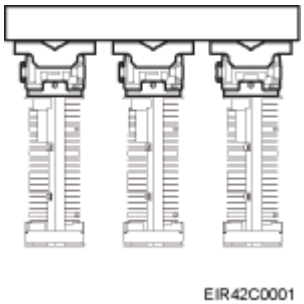

Copyright © Huawei Technologies Co., Ltd.

Figure 3-17 Correct installation of mounting brackets for multiple RRUs installed on an indoor wall in side-mounted mode

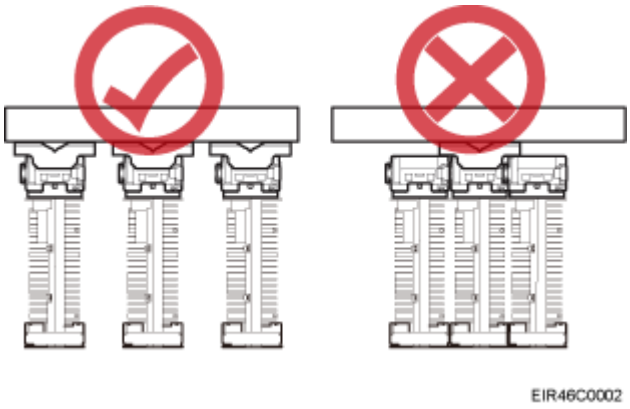

Figure 3-18 shows an RRU installed on a wall.

Figure 3-18 RRU installed on a wall

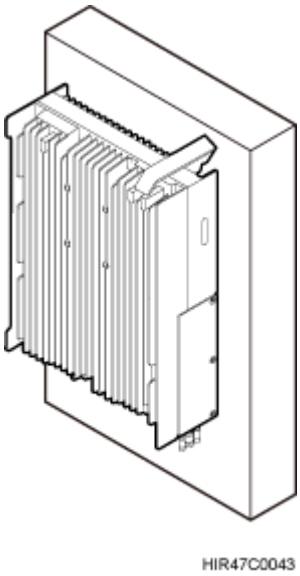

Installing an RRU on an IFS06

In an IFS06 scenario:

- The upper and lower adjustable beams on an IFS06 can be moved up and down to fit for heights of RRUs.
- The IFS06 supports at least three RRUs when the ambient temperature is higher than or equal to the lowest operating temperature of the RRU and at least 5°C (41°F) lower than the highest operating temperature of the RRU. The IFS06 supports a maximum of six RRUs when the ambient temperature is higher than or equal to the lowest operating temperature

Copyright © Huawei Technologies Co., Ltd.

of the RRU and at least 10°C (50°F) lower than the highest operating temperature of the RRU.

NOTE

For details about the operating temperature of the RRU, see section "Technical Specifications of RRUs" in *3900 Series Base Station Technical Description*.

CAUTION

The mounting brackets for multiple RRUs cannot be combined when the RRUs are installed on an IFS06, as shown in **Figure 3-19**.

Figure 3-19 Correct installation of mounting brackets for RRUs installed on an IFS06

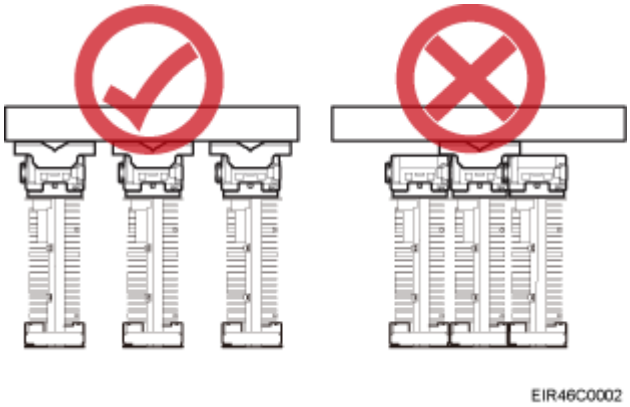

Figure 3-20 and **Figure 3-21** show RRUs installed on an IFS06.

Copyright © Huawei Technologies Co., Ltd.

Figure 3-20 Three RRUs installed on an IFS06

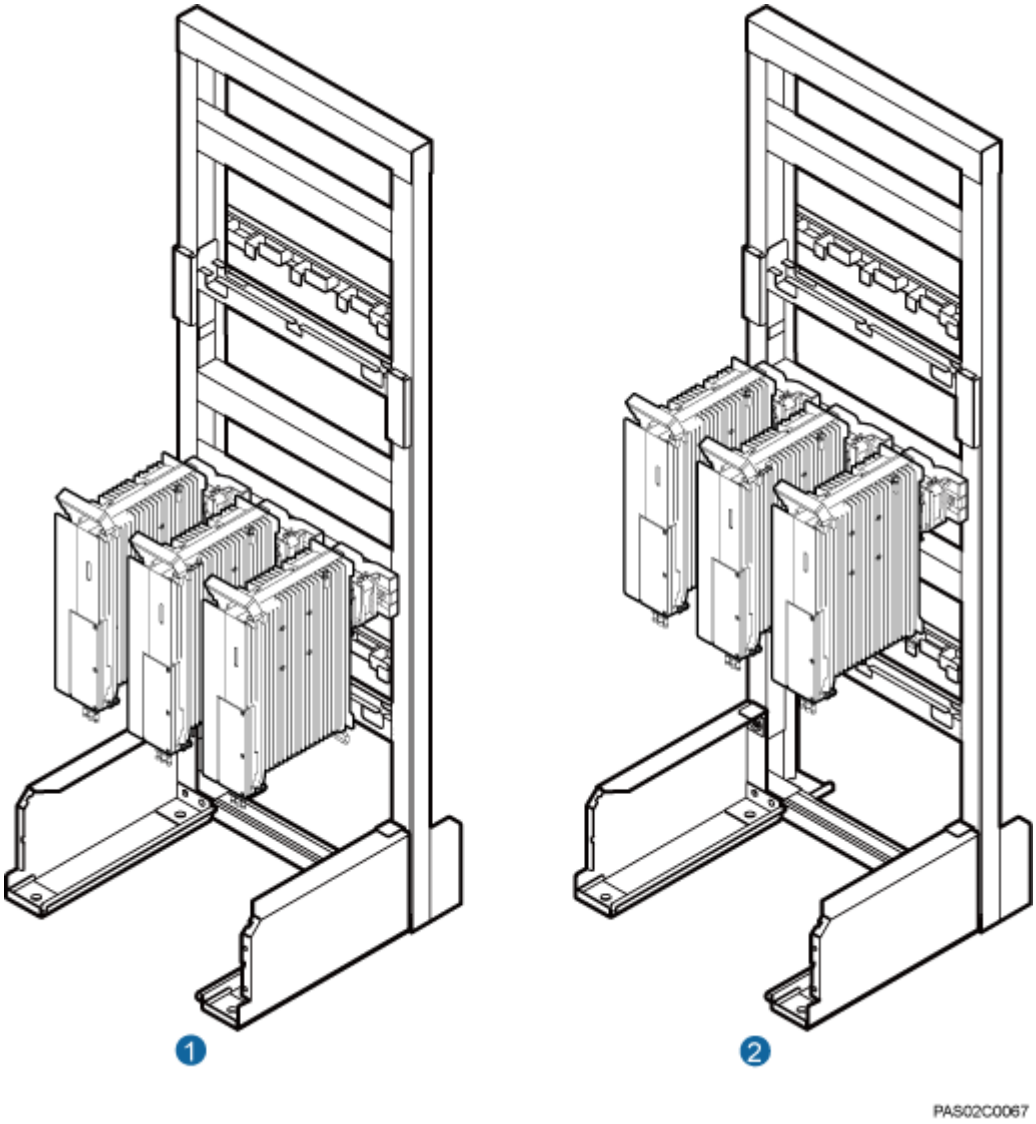

(1) Height-restricted scenario (2) Height-unrestricted scenario

Copyright © Huawei Technologies Co., Ltd.

Figure 3-21 Six RRUs installed on an IFS06

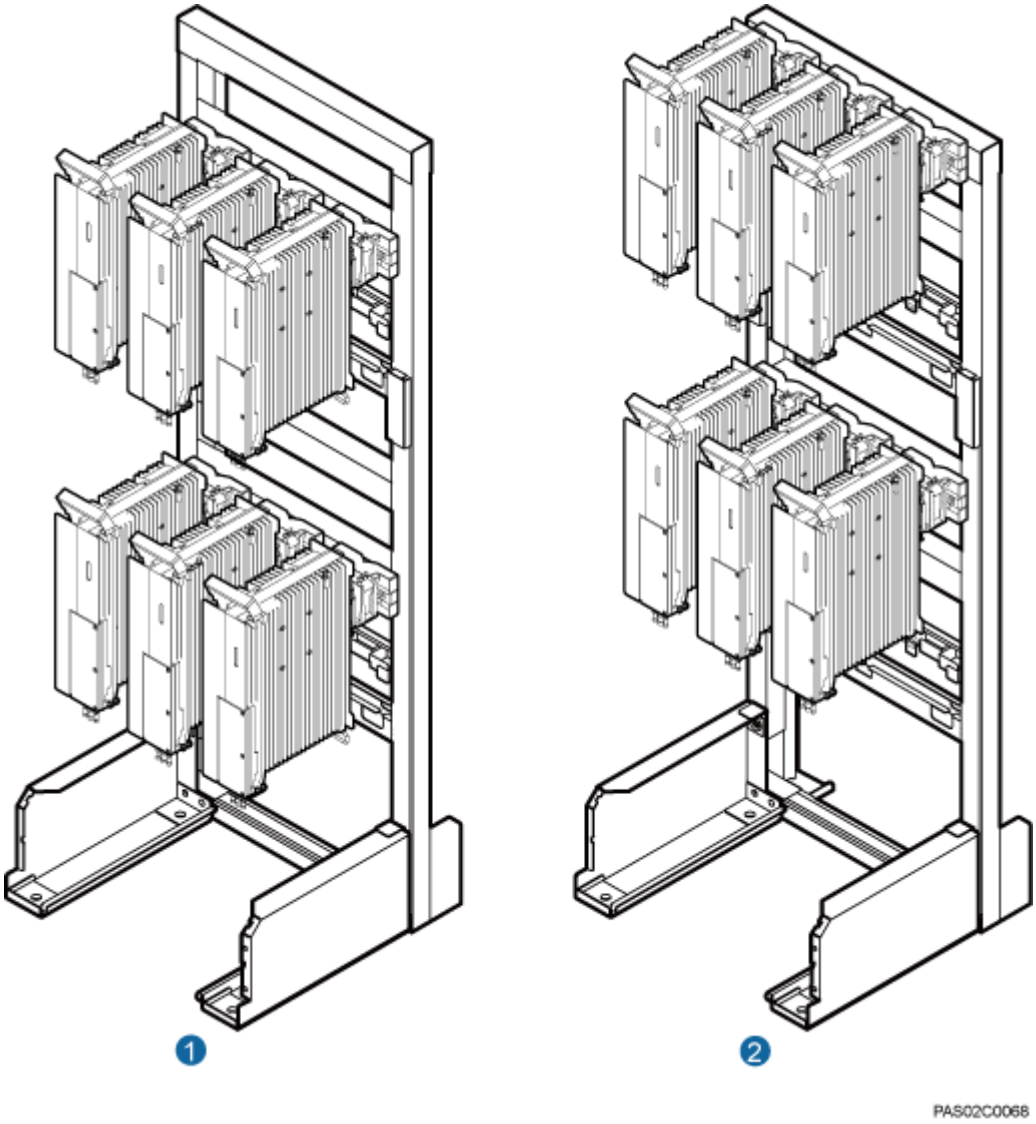

(1) Height-restricted scenario	(2) Height-unrestricted scenario

3.5 Installation Clearance Requirements of an RRU

This section describes the requirements for the installation clearance of a single RRU and multiple RRUs and the requirements for the installation spacing between RRUs.

3.5.1 Clearance for a Single RRU

This section describes the recommended and minimum clearance for a single RRU.

Copyright © Huawei Technologies Co., Ltd.

NOTE

- The recommended clearance ensures normal running and provides an appropriate space for operation and maintenance (OM). If there is sufficient space, leave the recommended clearance after installing the equipment.
- The minimum clearance ensures normal running and heat dissipation, but OM activities such as checking indicator status and opening the cabling cavity cannot be properly conducted. If the installation space is restricted, leave the minimum clearance after installing the equipment.

Clearances for a Single RRU in Standard or Reverse Mode

Figure 3-22 shows the clearances for a single RRU in standard or reverse mode.

Figure 3-22 Clearances for a single RRU in standard or reverse mode

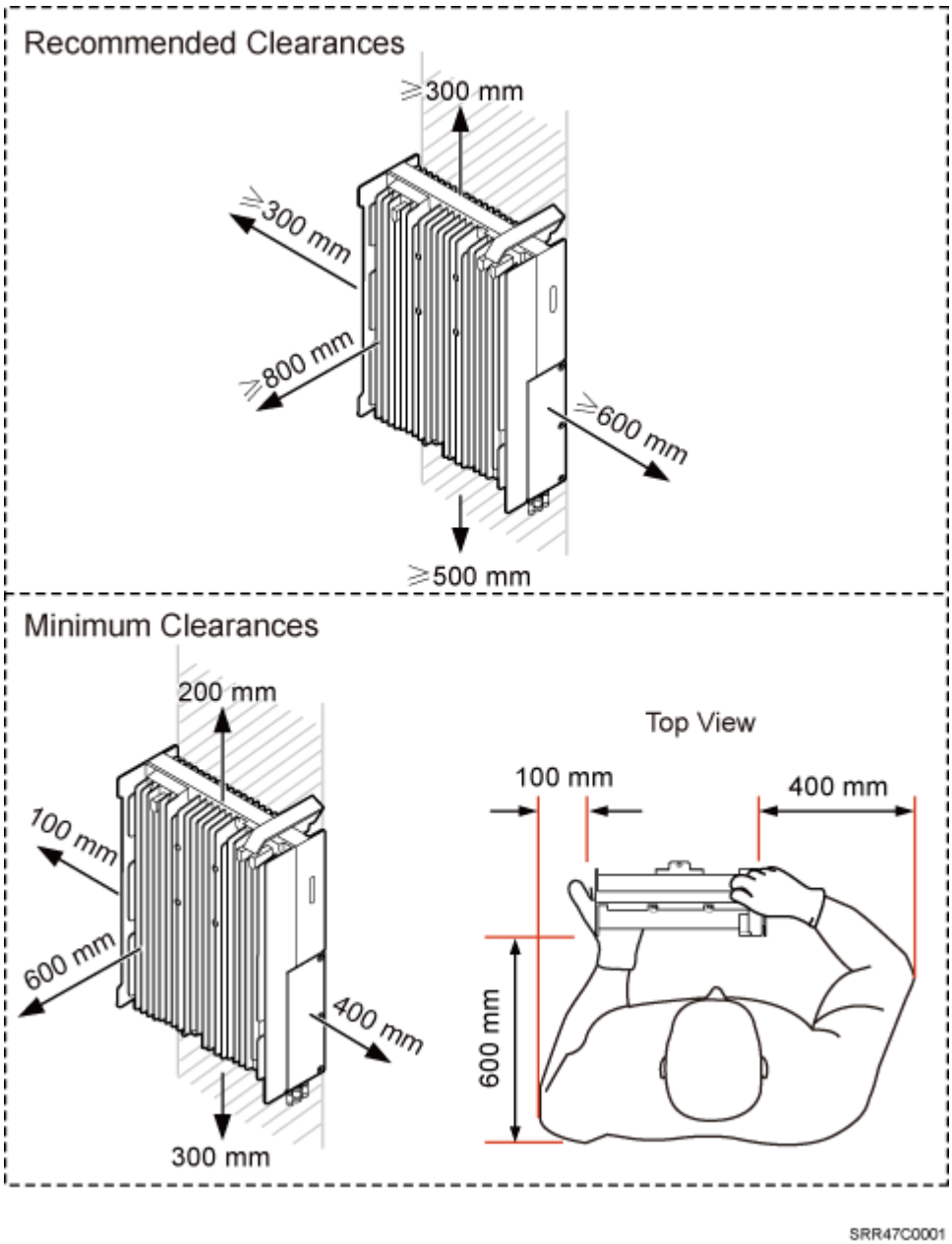

Copyright © Huawei Technologies Co., Ltd.

Clearances for a Single RRU in Side-Mounted Mode

Figure 3-23 shows the clearances for a single RRU in side-mounted mode.

Figure 3-23 Clearances for a single RRU in side-mounted mode

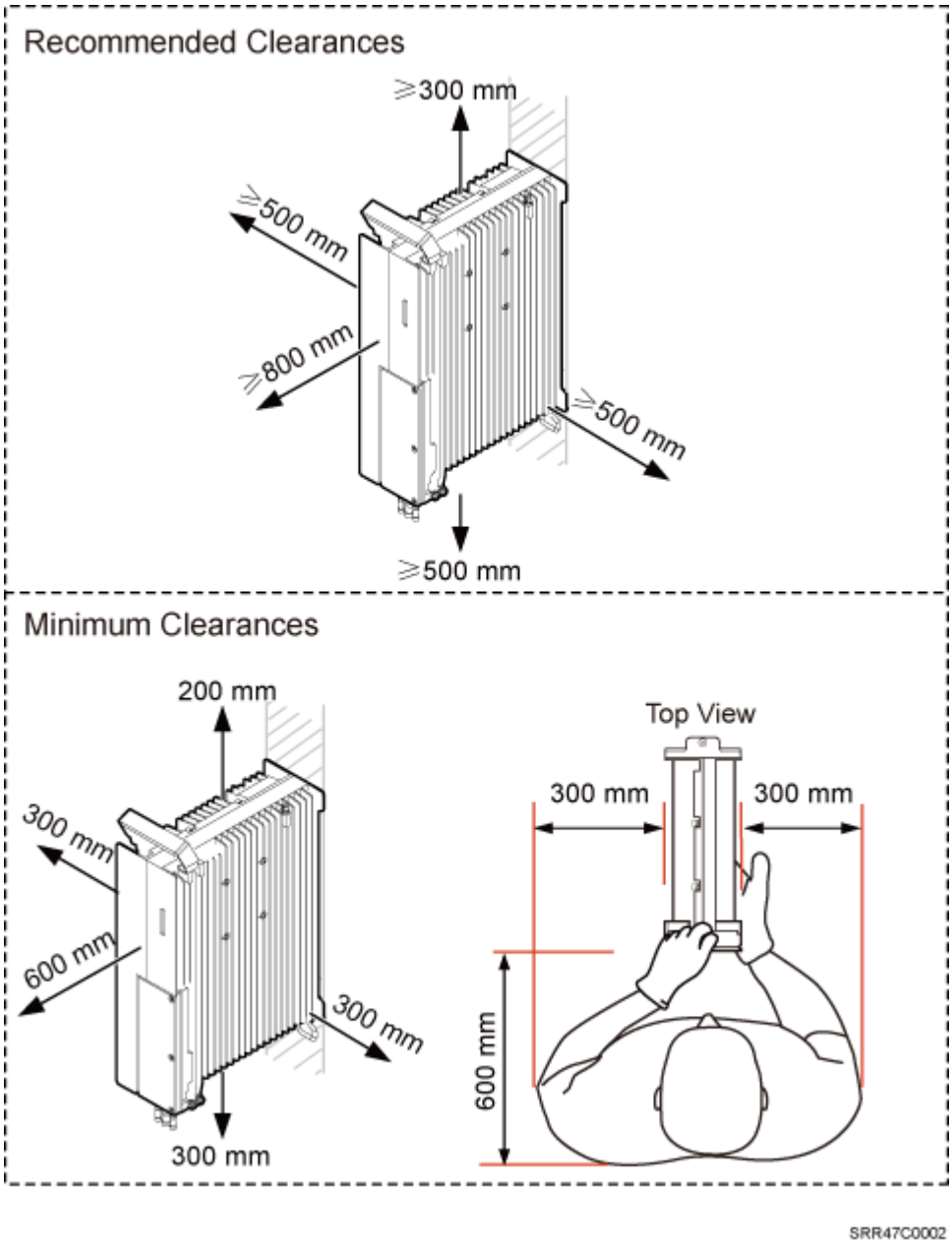

Clearances for a Single Tower-mounted RRU

Figure 3-24 and Figure 3-25 show the clearances for a single tower-mounted RRU in standard or reverse mode and in side-mounted mode, respectively.

Copyright © Huawei Technologies Co., Ltd.

Figure 3-24 Minimum clearance for a single tower-mounted RRU in standard or reverse mode

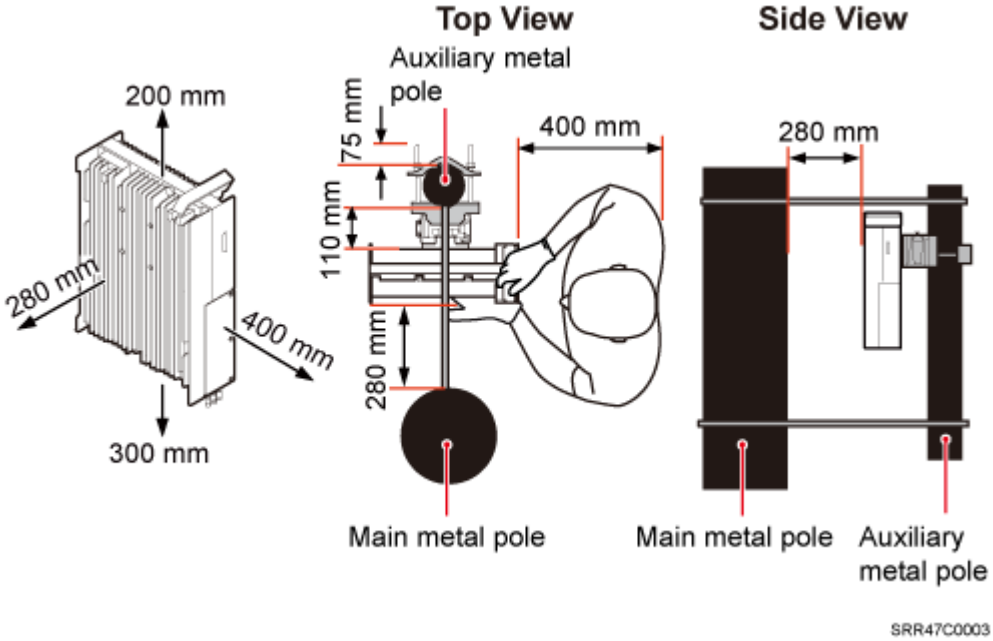

Figure 3-25 Minimum clearance for a single tower-mounted RRU in side-mounted mode

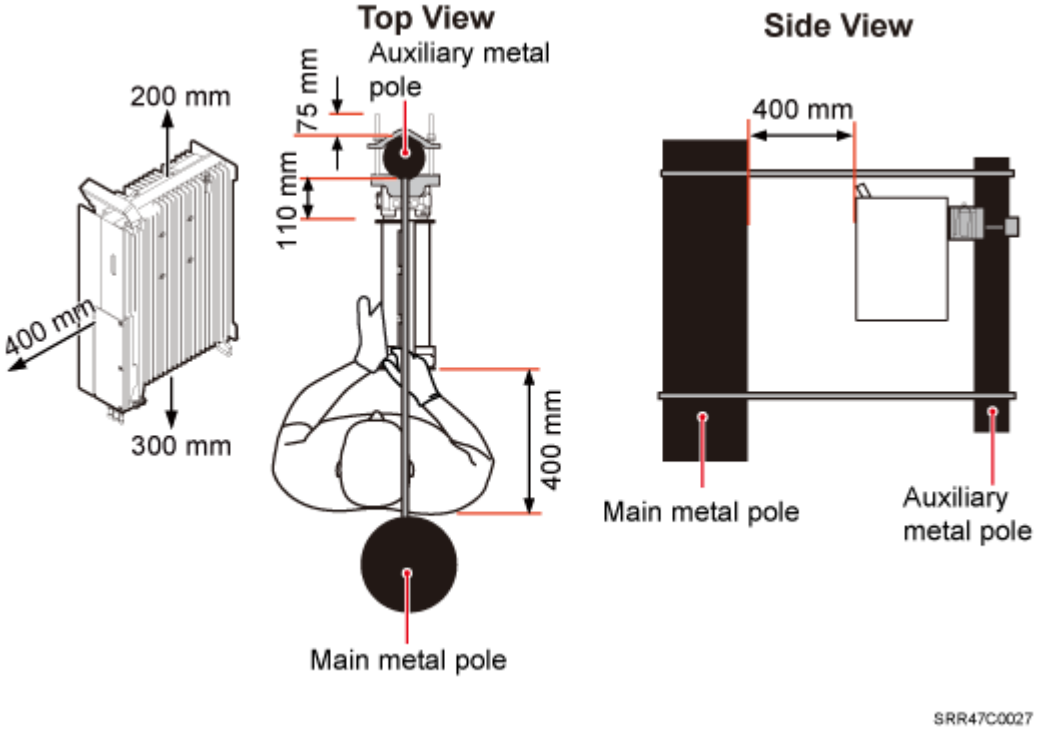

3.5.2 Clearance for Multiple RRUs

This section describes the recommended and minimum clearance for multiple RRUs.

Copyright © Huawei Technologies Co., Ltd.

NOTE

- The recommended clearance ensures normal running and provides an appropriate space for operation and maintenance (OM). If there is sufficient space, leave the recommended clearance after installing the equipment.
- The minimum clearance ensures normal running and heat dissipation, but OM activities such as checking indicator status and opening the cabling cavity cannot be properly conducted. If the installation space is restricted, leave the minimum clearance after installing the equipment.

Recommended Clearance for Multiple RRUs Installed in Centralized Mode

Figure 3-26 shows the recommended clearance for multiple RRUs installed in centralized mode.

Figure 3-26 Recommended clearances for three or more RRUs installed on a pole

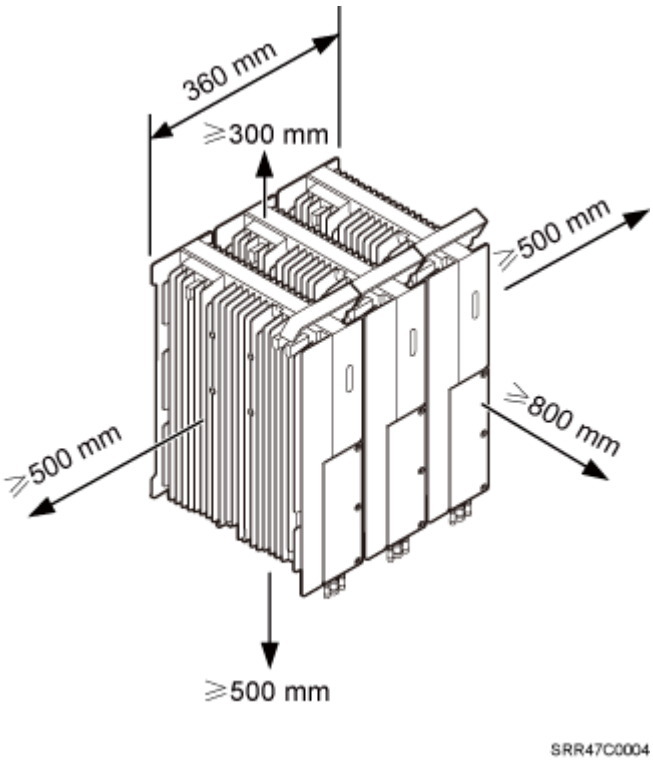

Minimum Clearance for Multiple RRUs Installed in Centralized Mode

Figure 3-27 shows the minimum clearance for multiple RRUs installed in centralized mode.

Copyright © Huawei Technologies Co., Ltd.

Figure 3-27 Minimum clearances for multiple RRUs installed in centralized mode

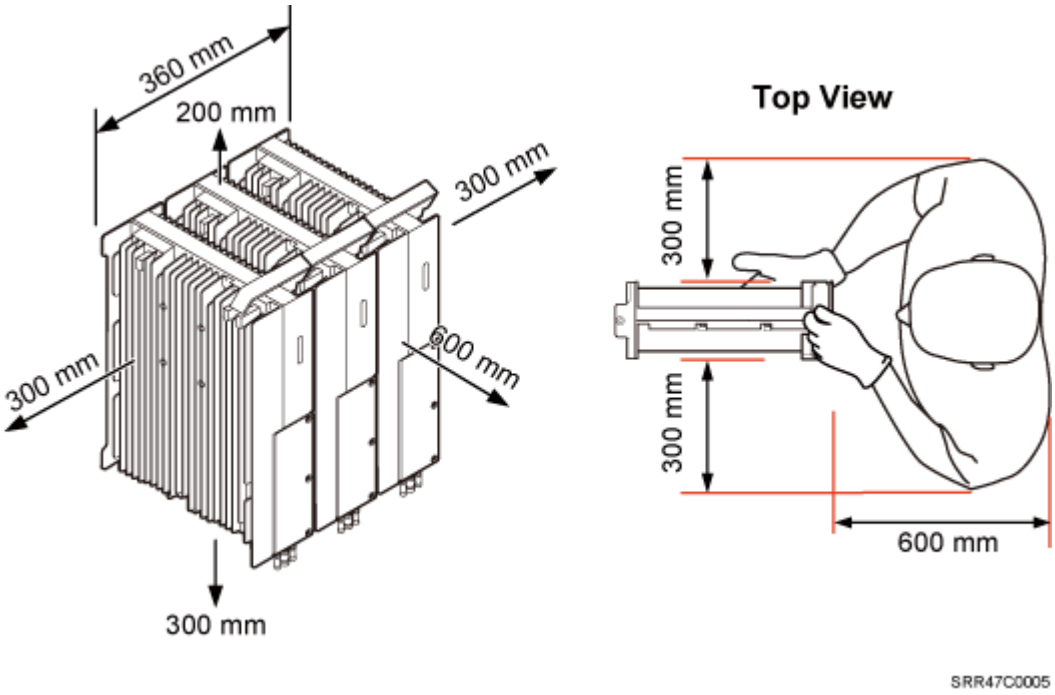

Recommended Clearance for Multiple RRUs Installed on a Wall in Standard Mode

Figure 3-28 shows the recommended clearance for multiple RRUs installed on a wall in standard mode.

Figure 3-28 Recommended clearances for three or more RRUs installed on a wall in standard mode

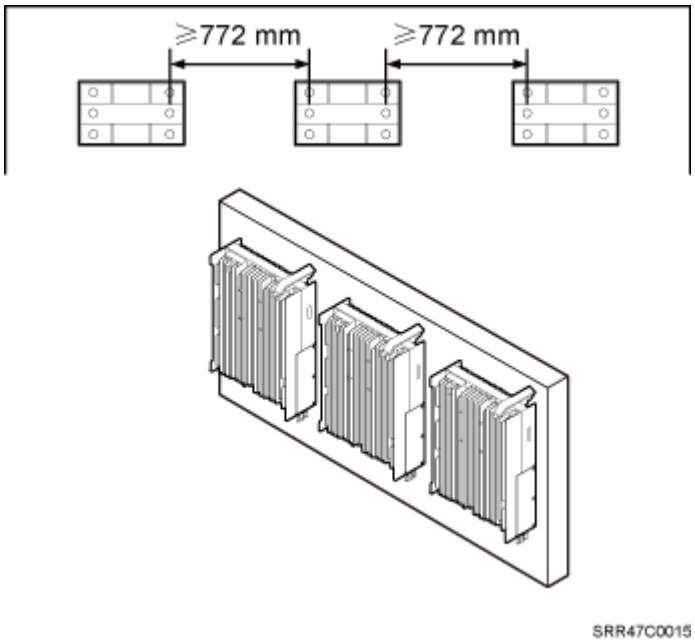

Copyright © Huawei Technologies Co., Ltd.

Minimum Clearance for Multiple RRUs Installed on a Wall in Standard Mode

Figure 3-29 shows the minimum clearance for multiple RRUs installed on a wall in standard mode.

Figure 3-29 Minimum clearances for three or more RRUs installed on a wall in standard mode

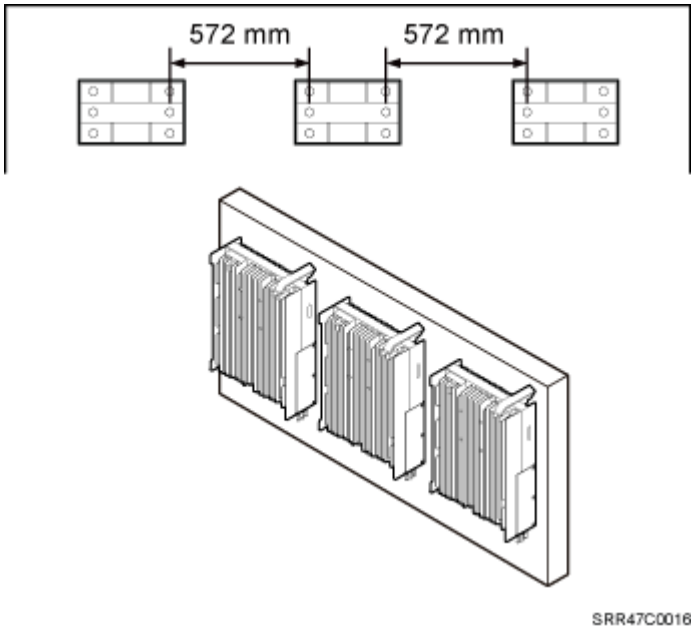

Recommended Clearance for Multiple RRUs Side-Mounted on a Wall

Figure 3-30 shows the recommended clearance for multiple RRUs side-mounted on a wall.

Copyright © Huawei Technologies Co., Ltd.

Figure 3-30 Recommended clearances for three or more RRUs installed on a wall in side-mounted mode

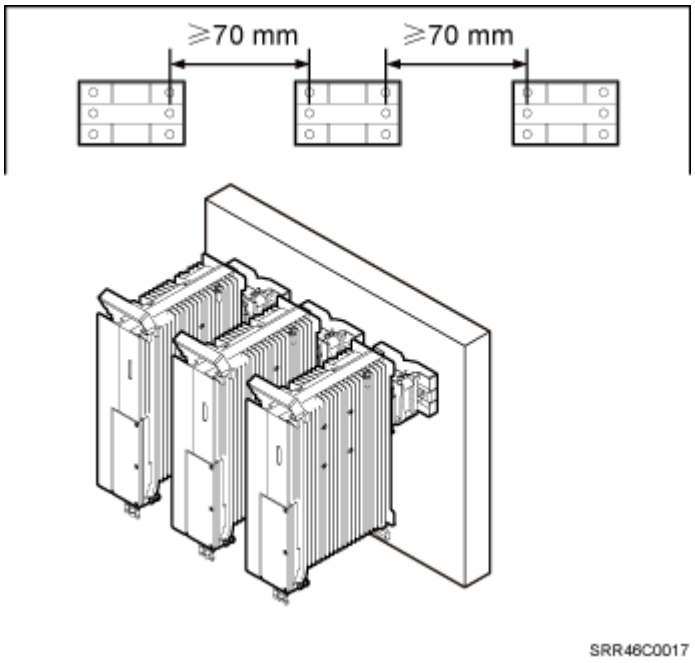

3.5.3 Installation Spacing Between RRUs

This section describes the horizontal and vertical spacing between RRUs.

Recommended Horizontal Spacing Between RRUs

Figure 3-31 shows the recommended horizontal spacing between RRUs.

Figure 3-31 Recommended horizontal spacing between RRUs

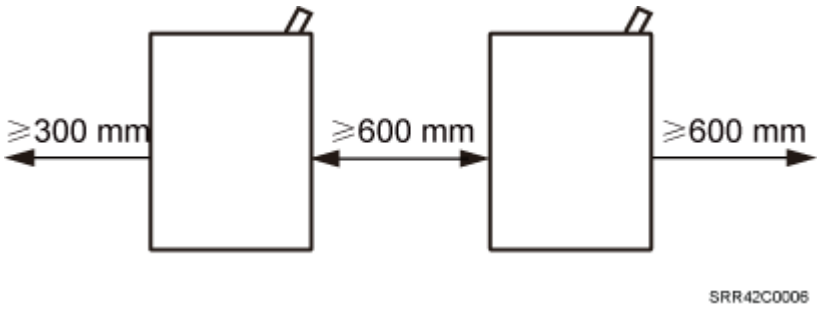

Minimum Horizontal Spacing Between RRUs

Figure 3-32 shows the minimum horizontal spacing between RRUs.

Copyright © Huawei Technologies Co., Ltd.

Figure 3-32 Minimum horizontal spacing between RRUs

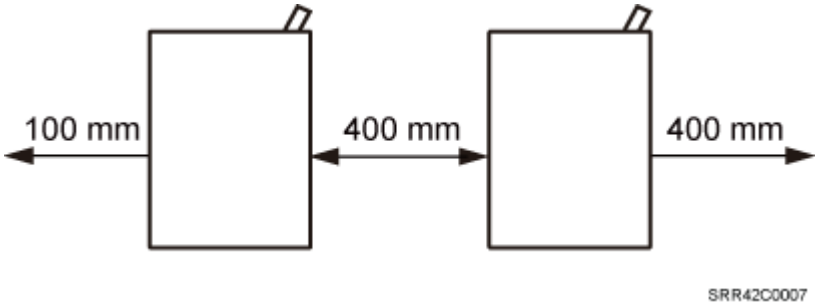

Recommended Vertical Spacing Between RRUs

Figure 3-33 shows the recommended vertical spacing between RRUs.

Figure 3-33 Recommended vertical spacing between RRUs

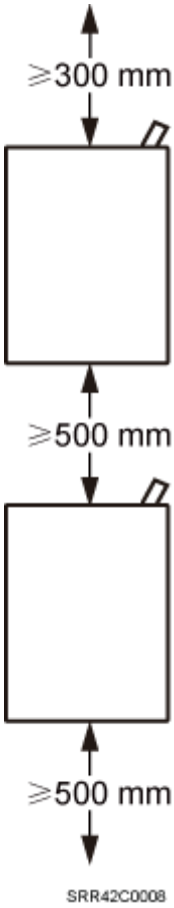

Minimum Vertical Spacing Between RRUs

Figure 3-34 shows the minimum vertical spacing between RRUs.

Copyright © Huawei Technologies Co., Ltd.

Figure 3-34 Minimum vertical spacing between RRUs

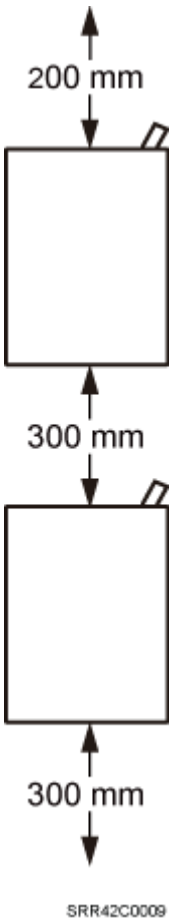

Copyright © Huawei Technologies Co., Ltd.

4 Unpacking the Equipment

This chapter describes how to unpack and check the delivered equipment to ensure that all the materials are included and intact.

Context

NOTE

When transporting, moving, or installing the equipment, components, or parts, you must:

- Ensure that they are transported in the delivered packages instead of being unpacked or in non-standard packages. If boards are used for a trial and then transported to sites, pack the boards again before transportation.
- Prevent them from colliding with doors, walls, shelves, or other objects.
- Wear clean gloves, and avoid touching the equipment, components, or parts with bare hands, sweat-soaked gloves, or dirty gloves.

CAUTION

- After a cabinet or an BBU is unpacked, it must be powered on within 7 days.
- After an RRU is unpacked, it must be powered on within 24 hours.

Procedure

Step 1 Check the total number of articles in each case according to the packing list.

If ...	Then ...
The total number tallies with the packing list	Go to **Step 2**.
The total number does not tally with the packing list	Find out the cause and report any missing articles to the local Huawei office.

Step 2 Check the exterior of the packing case.

Copyright © Huawei Technologies Co., Ltd.

If ...	Then ...
The outer packing is intact	Go to **Step 3**.
The outer packing is severely damaged or soaked	Find out the cause and report it to the local Huawei office.
The shockwatch label is red	Stop unpacking the wooden crate, and then report it to the transportation company.

Step 3 Check the type and quantity of the equipment in the cases according to the packing list.

If ...	Then ...
Types and quantity of the article tally with those on the packing list	Sign the *Packing List* with the customer.
Either shipment shortage, wrong shipment or damaged articles.	Report to the local Huawei office.

WARNING

To protect the equipment and prevent damage to the equipment, you are advised to keep the unpacked equipment and packing materials indoors, take photos of the stocking environment, packing case or carton, packing materials, and any rusted or eroded equipment, and then file the photos.

----End

Copyright © Huawei Technologies Co., Ltd.

5 Installation Process

The installation process involves installing an RRU and RRU cables, checking the RRU hardware installation, and powering on the RRU.

Figure 5-1 shows the process of installing an RRU.

Figure 5-1 Process of installing an RRU

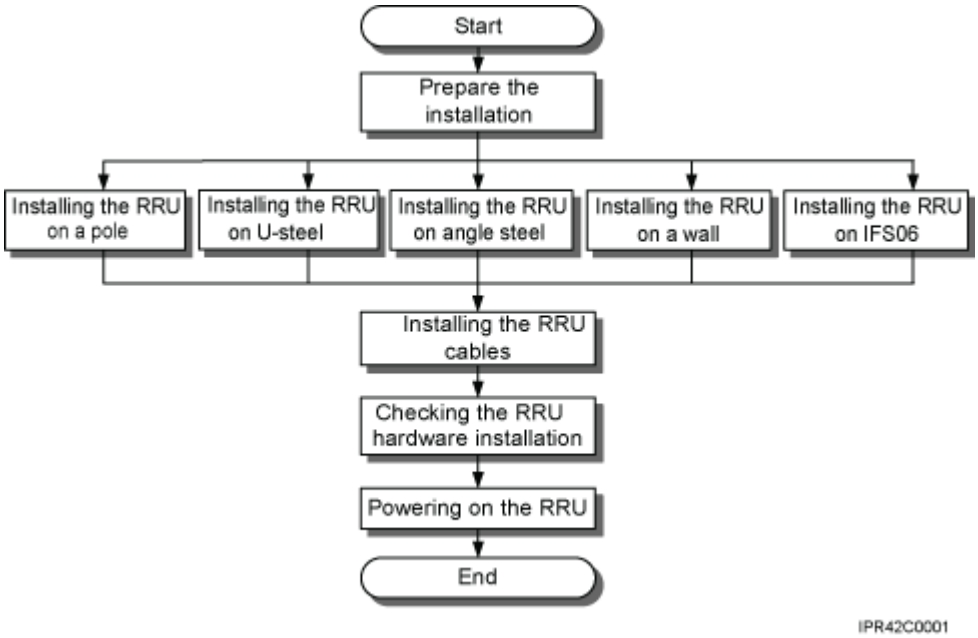

Copyright © Huawei Technologies Co., Ltd.

6 (Optional) Installing the Plastic Shells of the RRU

This section describes the procedure for installing the plastic shells of the RRU.

Context

An RRU is equipped with a plastic shell only when necessary.

Procedure

Step 1 Use an M6 Phillips screwdriver to loosen the two screws on the metal sheet of the RRU and remove the metal sheet, as shown in **Figure 6-1**.

Figure 6-1 Removing the metal sheet

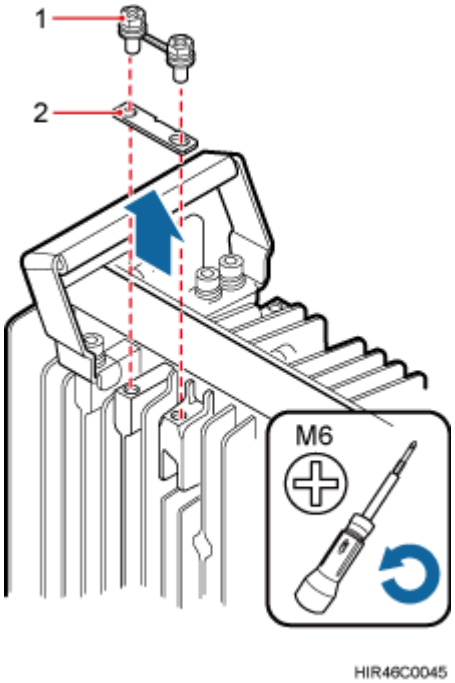

Copyright © Huawei Technologies Co., Ltd.

(1) Screw	(2) Metal sheet

Step 2 Install a buckle on each side at the bottom of the RRU, and use an M4 torque wrench to tighten the screws on the buckles to 1.4 N•m (12.39 lbf•in.), as shown in **Figure 6-2**.

Figure 6-2 Installing buckles at the bottom

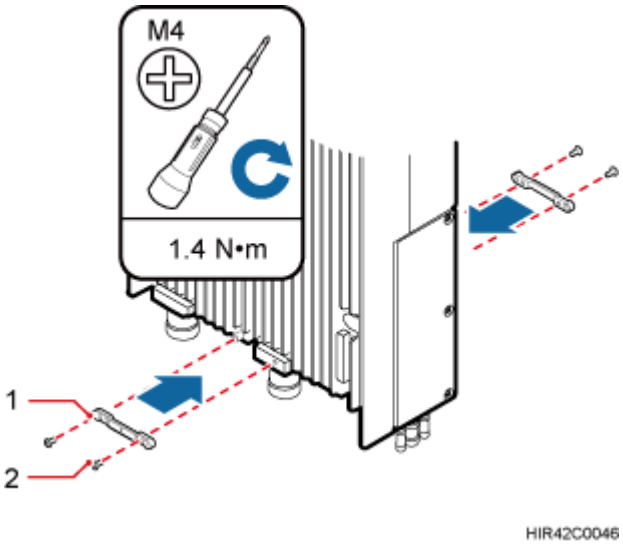

(1) Buckle	(2) Screw

Step 3 Use four hex screws to secure the plastic shells onto the RRU and use an M6 hex key wrench to tighten the screws to 2.8 N•m (24.78 lbf•in.), as shown in **Figure 6-3**.

Copyright © Huawei Technologies Co., Ltd.

Figure 6-3 Installing the plastic shells of the RRU

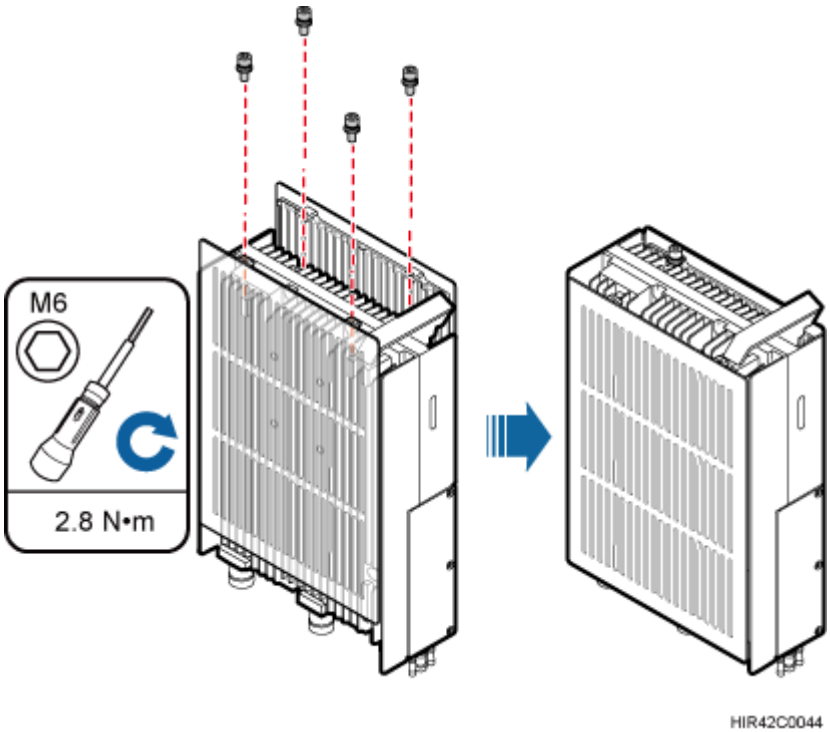

----End

Copyright © Huawei Technologies Co., Ltd.

7 Hoisting an RRU and Related Cables onto a Tower

About This Chapter

This section describes the procedure for hoisting an RRU and related cables onto a tower and the precautions that must be taken.

7.1 Hoisting an RRU onto a Tower
This section describes the procedures and precautions for hoisting an RRU and its mounting kits onto a tower. In tower-mounted scenario, the RRU can be installed on a pole, U-steel, or angle steel.

7.2 Hoisting Fiber Optic Cables onto a Tower
This section describes the procedure for hoisting fiber optic cables onto a tower and the precautions that must be taken.

7.3 Hoisting Power Cables onto a Tower
This section describes the procedure for hoisting power cables onto a tower and the precautions that must be taken.

Copyright © Huawei Technologies Co., Ltd.

7.1 Hoisting an RRU onto a Tower

This section describes the procedures and precautions for hoisting an RRU and its mounting kits onto a tower. In tower-mounted scenario, the RRU can be installed on a pole, U-steel, or angle steel.

Prerequisites

When the RRU is used with an AC/DC power module, you need to install the AC/DC power module onto the RRU before hoisting the RRU onto a tower. For details about how to install an AC/DC power module onto the RRU, see Installing an AC/DC Power Module onto an RRU.

CAUTION

- Do not stand the RRU upright because the RF ports cannot support the weight of the RRU.
- Place a foam pad or cardboard under the RRU to protect the RRU housing from damage during the installation.

Procedure

Step 1 Hoist the RRU and mounting kits onto the tower respectively, as shown in **Figure 7-1**.

NOTE

Hoist mounting kits onto the tower and then install the mounting kits before hoisting the RRU onto the tower. When hoisting the mounting kits and RRU, protect them from colliding with the tower.

Copyright © Huawei Technologies Co., Ltd.

Figure 7-1 Hoisting the RRU onto the tower

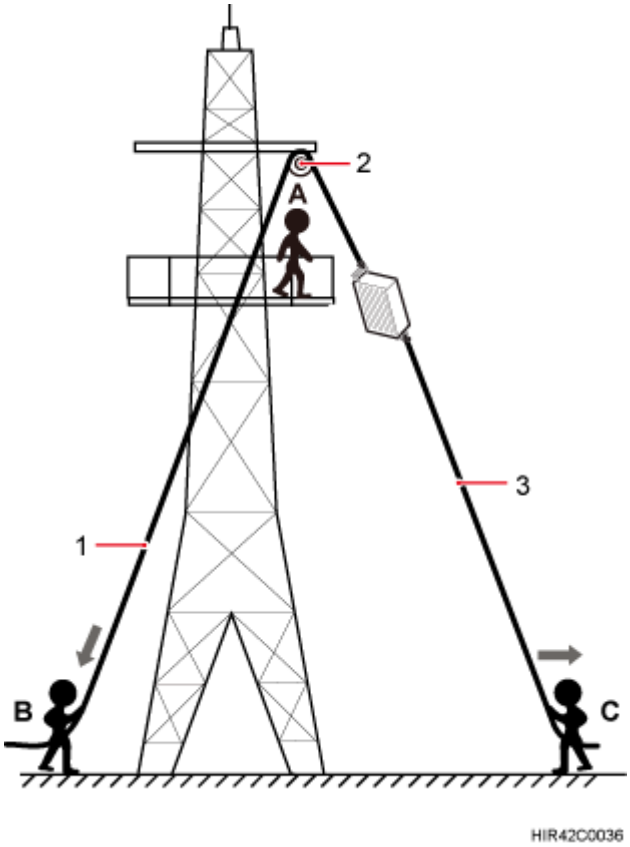

(1) Lifting sling (2) Fixed pulley (3) Traction sling

1. After climbing up to the tower, installation engineer A secures the fixed pulley to the tower platform support and leads the lifting sling through the fixed pulley.
2. Installation engineer C binds the RRU mounting kits properly using a lifting sling, as shown in **Figure 7-2**, and binds the RRU using a lifting sling and a traction sling, as shown in **Figure 7-3**.

Copyright © Huawei Technologies Co., Ltd.

Figure 7-2 Binding mounting kits for the RRU

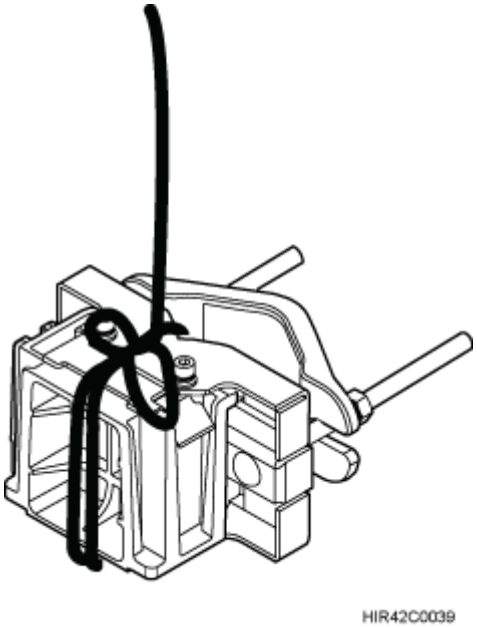

Figure 7-3 Binding the RRU

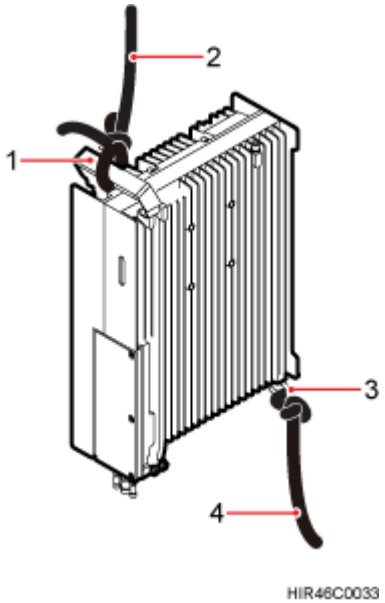

(1) Handle (2) Lifting sling (3) Traction eye (4) Traction sling

Copyright © Huawei Technologies Co., Ltd.

CAUTION

- The load-bearing capacity of each sling must be greater than 200 kg (441 lb) and the diameter of each sling must be less than 25 mm (0.98 in.).
- When hoisting the RRU onto a tower, protect them from colliding with the tower and ground.
- Hoist the RRU onto the tower before it is installed on a pole, angle steel, or U-steel.
- Do not hoist any thing by the traction eye.
- Do not hoist the RRU by the handle or traction eye only, as shown in **Figure 7-4** and **Figure 7-5**.

Figure 7-4 Incorrect binding method

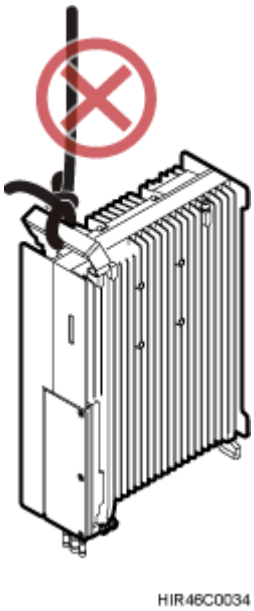

Copyright © Huawei Technologies Co., Ltd.

Figure 7-5 Incorrect binding method

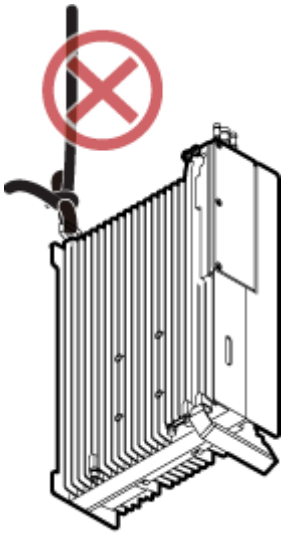

3. Installation engineer B pulls the lifting sling downwards, and installation engineer C pulls the traction sling outwards to protect the RRU from colliding with the tower.

Step 2 Installation engineer A catches the RRU, install the RRU on the main bracket, use an inner hexagon screwdriver to tighten the captive screw into the hole of the attachment plate to 5 N·m (44.25 lbf·in.) for connecting the attachment plate and the main bracket, see **8 Installing the RRU**.

Step 3 Remove the lifting sling and traction sling.

NOTE

The procedure for hoisting the RRU and mounting kits onto the tower is for your reference only.

----End

7.2 Hoisting Fiber Optic Cables onto a Tower

This section describes the procedure for hoisting fiber optic cables onto a tower and the precautions that must be taken.

Context

Cabling requirements for power cables are met. For details, see **9.1 Cabling Requirements**.

Procedure

Step 1 Hoist the fiber optic cables onto the tower, as shown in **Figure 7-6**.

Copyright © Huawei Technologies Co., Ltd.

Figure 7-6 Hoisting fiber optic cables onto the tower

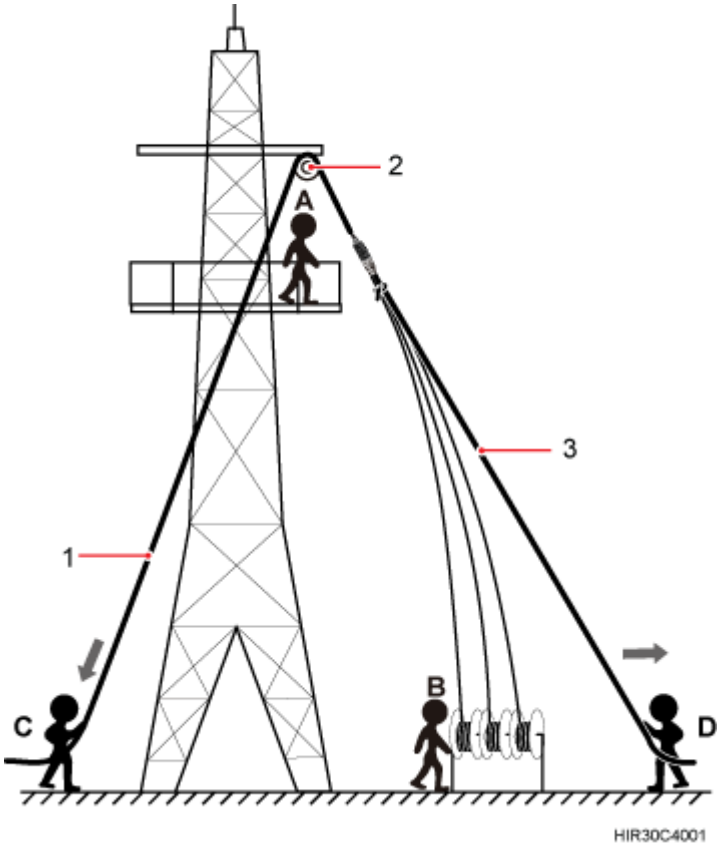

(1) Lifting sling (2) Fixed pulley (3) Traction sling

CAUTION

Before hoisting fiber optic cables onto the tower, connect the fiber optic cables to the RRU or BBU based on the labels on both ends of the cables and determine the hoisting direction.

1. After climbing up to the tower, installation engineer A secures the fixed pulley to the tower platform support and leads the lifting sling through the fixed pulley.
2. Installation engineer B places the fiber coiler for coiling fiber optic cables on the fiber spools, and installation engineer D lead the lifting sling through the stretch sling of the fiber optic cables and use the other sling as a traction sling to secure the cables 4 m (13.12 ft) away from the lifting sling, as shown in **Figure 7-7**.

Copyright © Huawei Technologies Co., Ltd.

Figure 7-7 Binding fiber optic cables

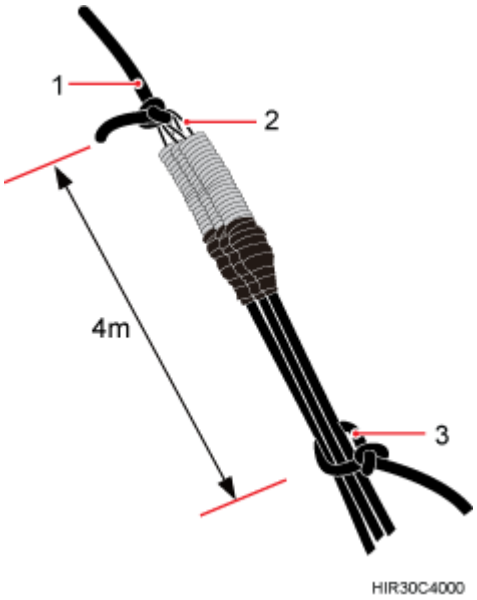

(1) Lifting sling (2) Stretch sling (3) Traction sling

CAUTION

Do not remove the stretch sling and protection pipe or bind fiber optic cables using one sling, as shown in **Figure 7-8**.

Figure 7-8 Incorrect binding method

3. Installation engineer B rotates the fiber spools at the speed of 5 m (16.4 ft) to 15 m (49.21 ft) per minute to coil the fiber optic cables.

Copyright © Huawei Technologies Co., Ltd.

4. Installation engineer C pulls the lifting sling downwards, and installation engineer D pulls the traction sling outwards to protect the fiber optic cables from colliding with the tower.

Step 2 Secure the fiber optic cables to the tower vertically using cable clips.

Step 3 Remove the lifting sling, traction sling, and protection pipe.

NOTE

The procedure for hoisting the fiber optic cables onto the tower is for your reference only.

----End

7.3 Hoisting Power Cables onto a Tower

This section describes the procedure for hoisting power cables onto a tower and the precautions that must be taken.

Context

Cabling requirements for power cables are met. For details, see **9.1 Cabling Requirements**.

The procedure for adding a connector to the RRU power cable on the RRU side is done under the tower.

Procedure

Step 1 Hoist the power cables onto the tower, as shown in **Figure 7-9**.

Copyright © Huawei Technologies Co., Ltd.

Figure 7-9 Hoisting power cables onto the tower

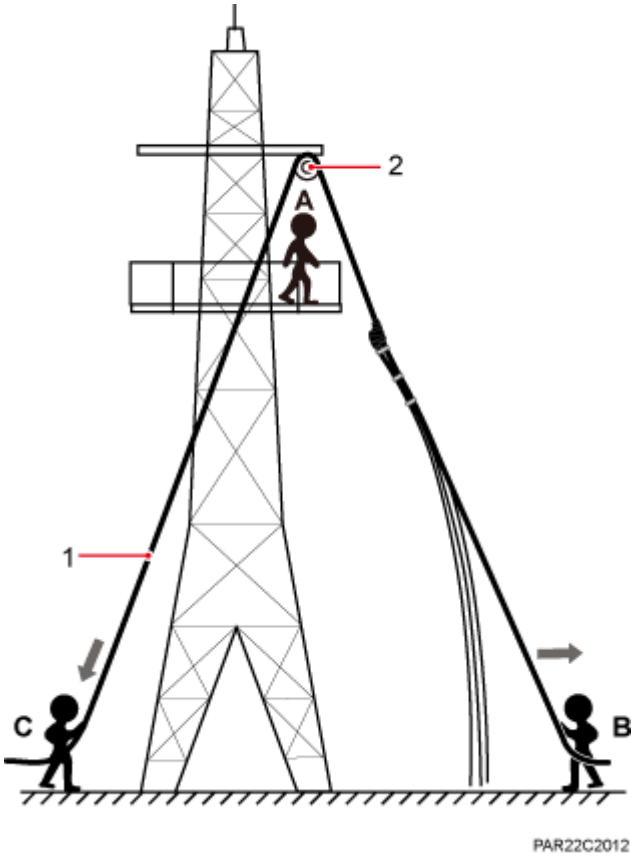

(1) Lifting sling (2) Fixed pulley

1. After climbing up to the tower, installation engineer A secures the fixed pulley to the tower platform support and leads the lifting sling through the fixed pulley.
2. Installation engineer B secures three cable ties to the power cable connector, and then secures the power cable to the lifting sling, as shown in **Figure 7-10**.

   NOTE

   The connector on the power cable in the figure is only an example. The actual connector may vary according to the situation.

Copyright © Huawei Technologies Co., Ltd.

Figure 7-10 Binding cable ties

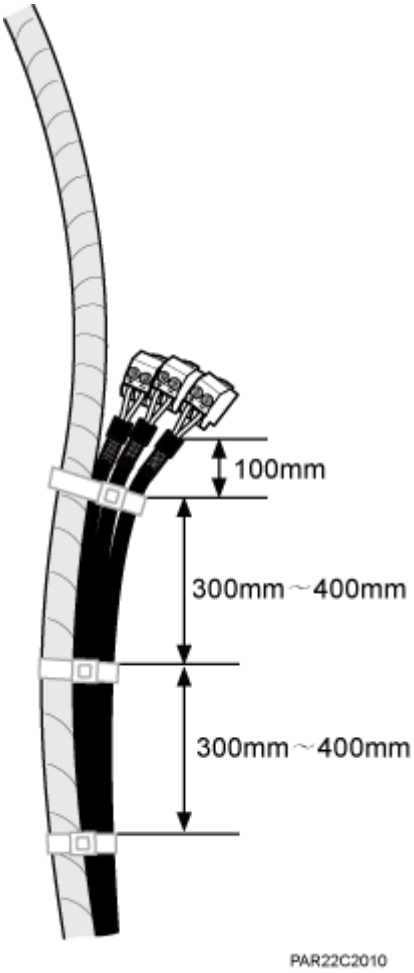

3. Installation engineer B wraps the power cable connector with a layer of PVC insulation tape, as shown in **Figure 7-11**.

NOTE

Wrap the PVC insulation tape from 30 mm (1.18 in.) away from one end of the connector until it reaches the other end of the connector. The total length of the wrapped connector is 100 mm (3.94 in.).

Copyright © Huawei Technologies Co., Ltd.

Figure 7-11 Wrapping the PVC insulation tape

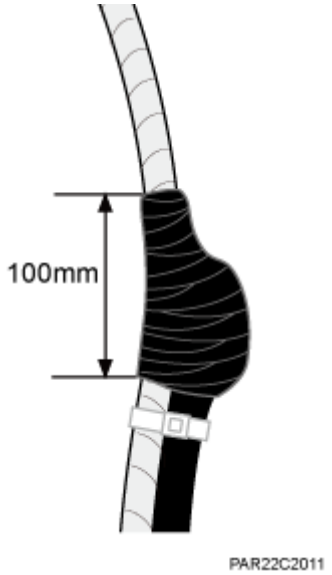

4. Installation engineer C pulls the lifting sling downwards, and installation engineer B pulls the other end of the lifting sling outwards to protect the power cables from colliding with the tower.

Step 2 Secure the power cables to the tower vertically using cable clips.

Step 3 Remove the cable ties, PVC insulation tape, and lifting sling.

NOTE

The procedure for hoisting the power cables onto the tower is for your reference only.

----End

Copyright © Huawei Technologies Co., Ltd.

8 Installing the RRU

About This Chapter

This chapter describes the procedure for installing the RRU. The RRU can be installed on a pole, U-steel, angle steel, wall, or an IFS06 . The procedure for installing the RRU varies depending on installation options.

8.1 Mounting Kits for an RRU
This section describes the bracket assembly and the attachment plate for an RRU.

8.2 Installing the RRU on a Pole
One or more RRUs can be installed on a pole.

8.3 Installing the RRU on U-steel
This section describes the procedure and precautions for installing the RRU on U-steel. An RRU can be installed on U-steel secured on the ground or a tower. Each piece of U-steel allows only one RRU to be installed in standard or reverse mode.

8.4 Installing the RRU on Angle Steel
This section describes the procedure and precautions for installing the RRU on angle steel. An RRU can be installed on angle steel secured on the ground or a tower. Each piece of angle steel allows only one RRU to be installed in standard or reverse mode.

8.5 Installing the RRU on a Wall
This section describes the procedure and precautions for installing the RRU on a wall.

8.6 Installing an RRU on an IFS06
This section describes the procedure and precautions for installing an RRU on an IFS06.

Copyright © Huawei Technologies Co., Ltd.

8.1 Mounting Kits for an RRU

This section describes the bracket assembly and the attachment plate for an RRU.

Figure 8-1 shows the front and rear of an RRU.

Figure 8-1 Front and side view of an RRU

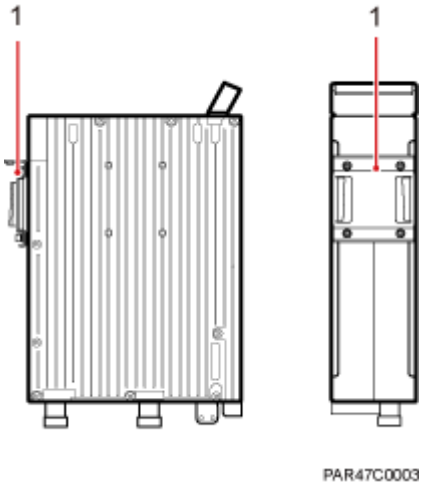

(1) Attachment plate

Figure 8-2 shows the bracket assembly for an RRU.

Figure 8-2 12 L blade RRU mounting kit

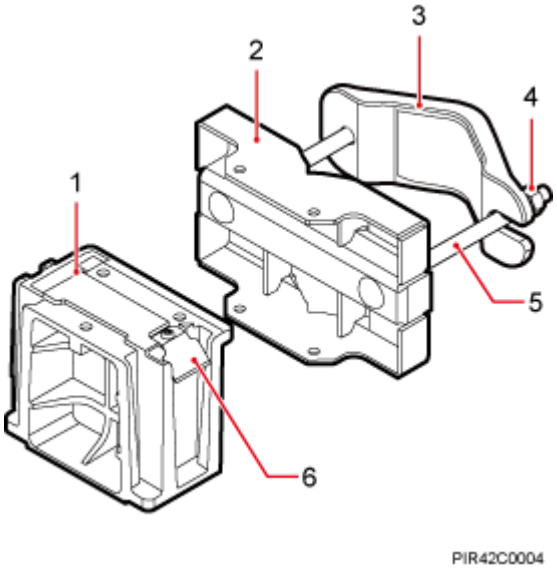

(1) Main bracket (2) Pole installation bracket (3) Auxiliary bracket (4) Nut (5) Square-neck bolt (6) Hoist clamp on the main bracket

Copyright © Huawei Technologies Co., Ltd.

8.2 Installing the RRU on a Pole

One or more RRUs can be installed on a pole.

8.2.1 Installing a Single RRU

This section describes the procedure and precautions for installing a single RRU on a pole.

Prerequisites

Before you install an RRU on a pole secured on a tower, the RRU and its mounting brackets are hoisted onto the tower. For details, see **7.1 Hoisting an RRU onto a Tower**.

The hoist clamp on the main bracket is secured properly.

CAUTION

- Do not stand the RRU upright because the RF ports cannot support the weight of the RRU.
- Place a foam pad or cardboard under the RRU to protect the RRU housing from damage during the installation.

Procedure

Step 1 Determine a position for installing the mounting brackets.

- If the pole must be installed on a tower, determine a position for installing the mounting brackets according to the instructions in **3.5.1 Clearance for a Single RRU**.
- If the pole must be installed on the ground, determine a position for installing the mounting brackets according to **Figure 8-3**.

Figure 8-3 Distance between the mounting brackets and the ground

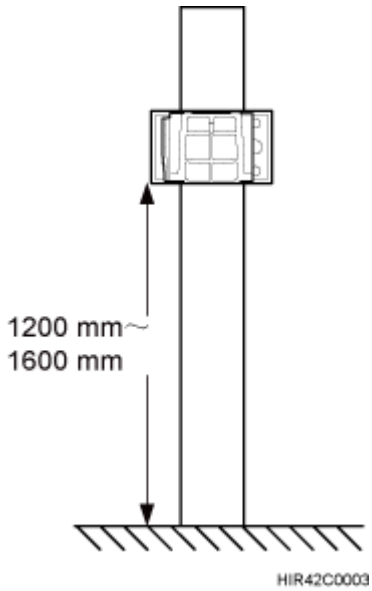

Copyright © Huawei Technologies Co., Ltd.

NOTE

It is recommended that the mounting brackets be installed at a height of 1200 mm (47.24 in.) to 1600 mm (62.99 in.) above the ground.

Step 2 Install the RRU mounting brackets, as shown in **Figure 8-4**.

Figure 8-4 Installing the RRU mounting brackets

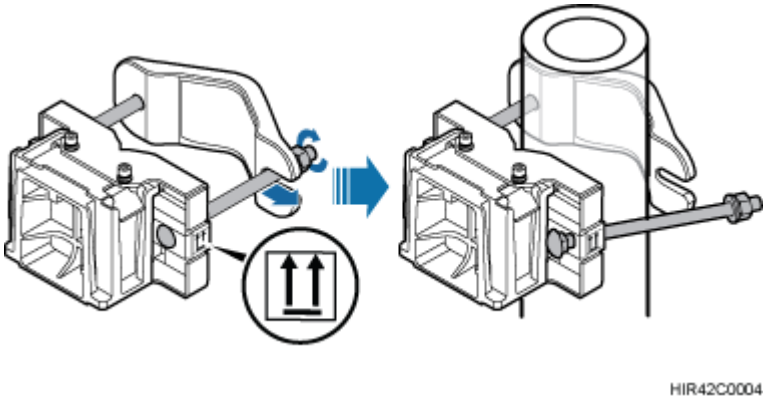

NOTE

Verify that the arrows on the mounting brackets are pointing up.

1. Adjust the position of the nut and remove one end of the square-neck bolt from the slot on the auxiliary bracket.
2. Slide the mounting brackets onto the pole horizontally and insert the square-neck bolt into the slot.

Step 3 Use a 16 mm (0.63 in.) M10 torque wrench to tighten the nuts to 40 N·m (354.03 lbf·in.) so that the mounting brackets are secured onto the pole, as shown in **Figure 8-5**.

CAUTION

Tighten the nuts on the two square-neck bolts alternatively. After the main and auxiliary brackets are secured properly, measure the spacing between the brackets on both sides and ensure that the spacing is the same on the two sides.

Copyright © Huawei Technologies Co., Ltd.

Figure 8-5 Securing the RRU mounting brackets

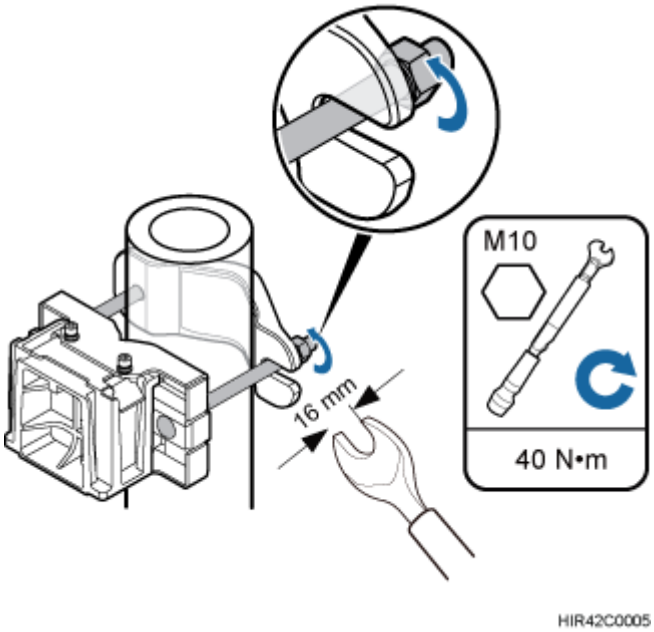

Step 4 Install the RRU onto the main bracket, as shown in **Figure 8-6**.

Figure 8-6 Installing the RRU onto the main bracket

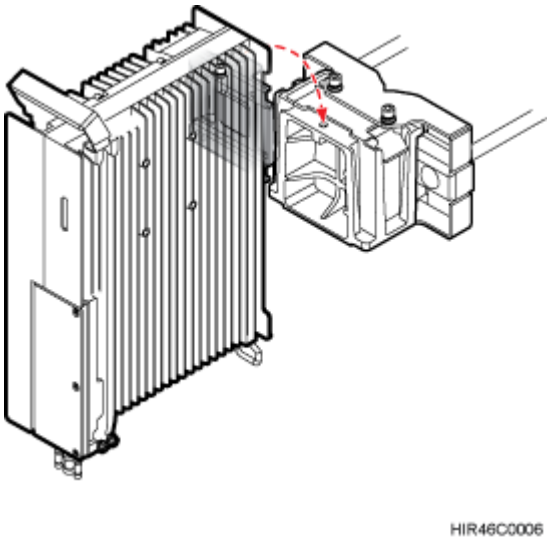

Step 5 Use an inner hexagon torque screwdriver to tighten the captive screw into the holes on the top of the attachment plate and main bracket to 5 N·m (44.25 lbf·in.) so that the attachment plate and main bracket are firmly secured, as shown in **Figure 8-7**.

Copyright © Huawei Technologies Co., Ltd.

Figure 8-7 Securing the captive screw into the connection hole

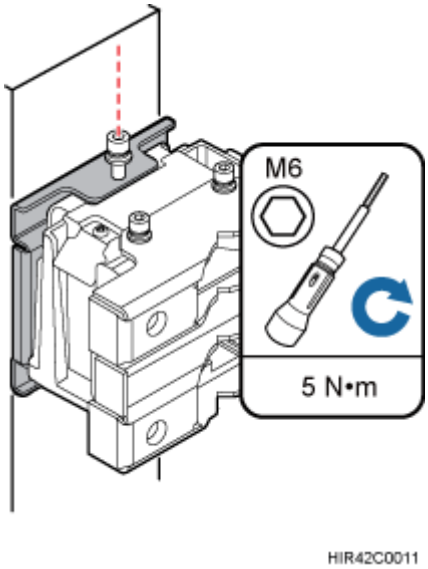

----End

8.2.2 Installing Two RRUs

This section describes the procedure and precautions for installing two RRUs on a pole.

Prerequisites

The hoist clamp on the main bracket is secured properly.

CAUTION

- Do not stand the RRU upright because the RF ports cannot support the weight of the RRU.
- Place a foam pad or cardboard under the RRU to protect the RRU housing from damage during the installation.

Procedure

Step 1 Install the first RRU onto the main bracket, as shown in **Figure 8-8**. For details, see **8.2.1 Installing a Single RRU**.

Copyright © Huawei Technologies Co., Ltd.

Figure 8-8 Installing the first RRU onto the main bracket

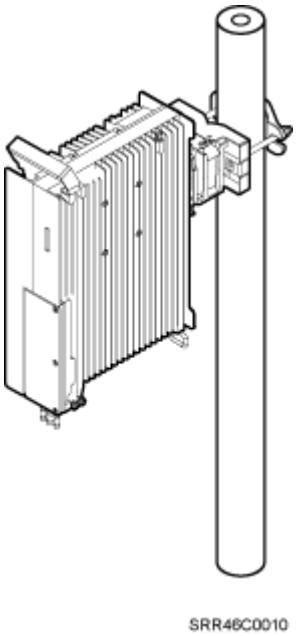

Step 2 Use an M6 inner hexagon screwdriver to remove the four inner hexagon screws from the second set of mounting brackets, and remove the main bracket from the auxiliary bracket, as shown in **Figure 8-9**.

Figure 8-9 Removing the RRU main bracket

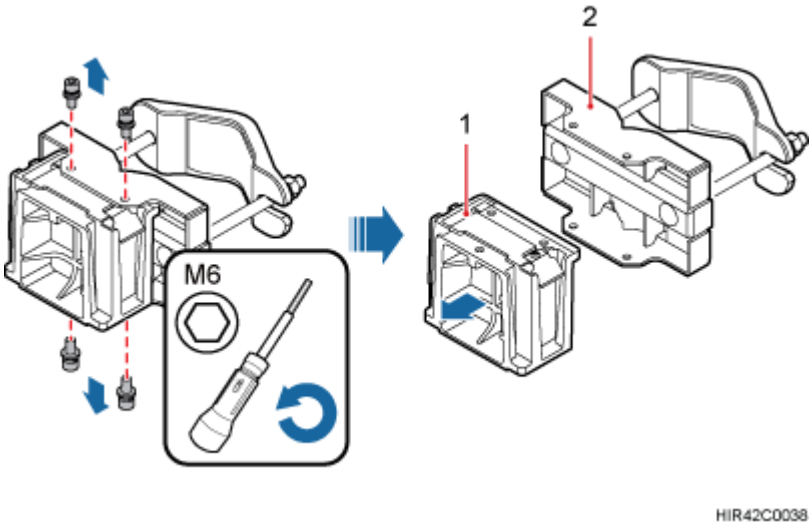

(1) Main bracket (2) Pole installation bracket

Step 3 Install the removed main bracket on one side of the first main bracket, as shown in **Figure 8-10**.

Copyright © Huawei Technologies Co., Ltd.

CAUTION

The second main bracket must be installed with the opening ends of U-shaped slots on both sides facing downwards.

Figure 8-10 Installing the second main bracket

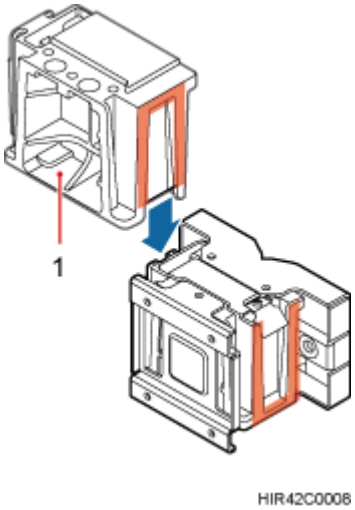

(1) Removed main bracket

Step 4 Install the second RRU onto the main bracket, as shown in **Figure 8-11**.

Figure 8-11 Installing the second RRU onto the main bracket

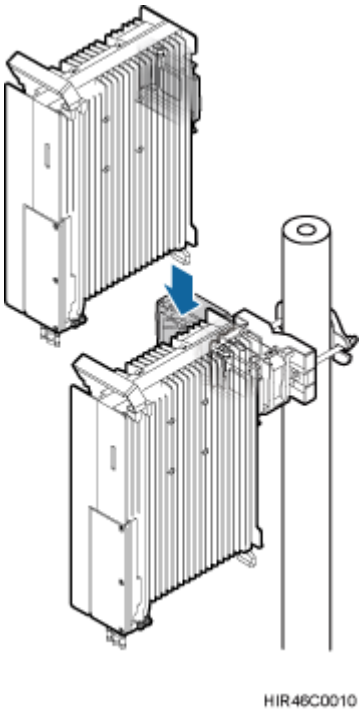

Copyright © Huawei Technologies Co., Ltd.

CAUTION

After installing each RRU on its main bracket, use an inner hexagon torque screwdriver to tighten the captive screw into the holes of the attachment plate and main bracket to 5 N·m (44.25 lbf·in.) so that the attachment plate and main bracket are firmly secured, as shown in **Figure 8-12**.

Figure 8-12 Securing the captive screw into the connection hole

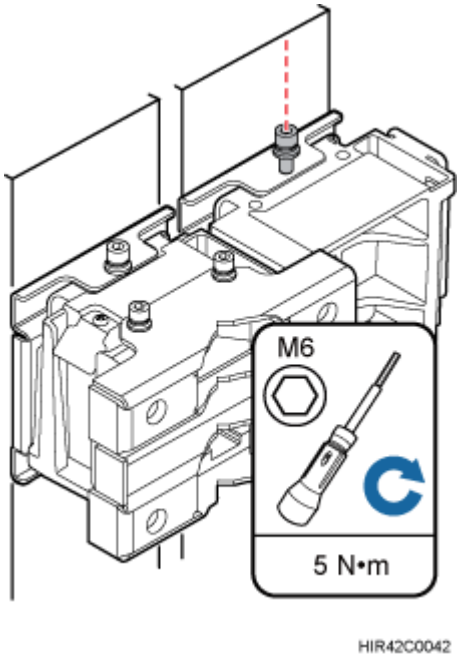

Step 5 Install the metal sheet for neighboring RRUs, as shown in **Figure 8-13**.

Copyright © Huawei Technologies Co., Ltd.

Figure 8-13 Installing the metal sheet

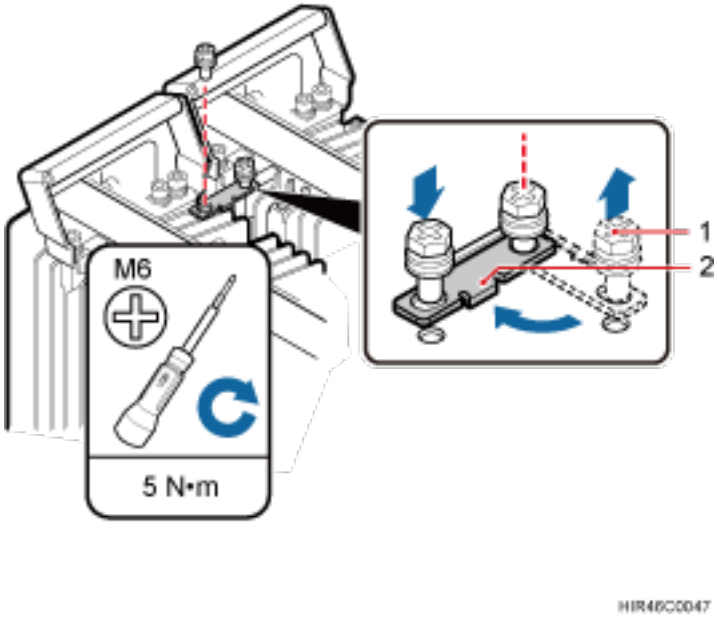

(1) Screw (2) Metal sheet

1. Use an M6 Phillips screwdriver to loosen the screw on the metal sheet farther from the handle of the first RRU and remove the screw.
2. Use an M6 Phillips screwdriver to loosen the screw on the metal sheet closer to handle of the first RRU. Then rotate the metal sheet to align the vacant hole in the metal sheet with a hole on the top of the second RRU.
3. Insert the removed screw into the hole on the top of the second RRU and use an M6 torque screwdriver to tighten the screw to 5 N·m (44.25 lbf·in.).

----End

8.2.3 Installing Three or More RRUs

The section describes the procedure and precautions for installing three or more RRUs on a pole.

Prerequisites

The hoist clamp on the main bracket is secured properly.

CAUTION

- Do not stand the RRU upright because the RF ports cannot support the weight of the RRU.
- Place a foam pad or cardboard under the RRU to protect the RRU housing from damage during the installation.

Copyright © Huawei Technologies Co., Ltd.

Context

A pole supports the installation of three, four, or six RRUs. The procedures for installing them are the same. Following is the procedure of installing four RRUs on a pole.

Procedure

Step 1 Install the two RRUs, as shown in **Figure 8-14**. For details, see **8.2.2 Installing Two RRUs**.

Figure 8-14 Two RRUs installed on a pole

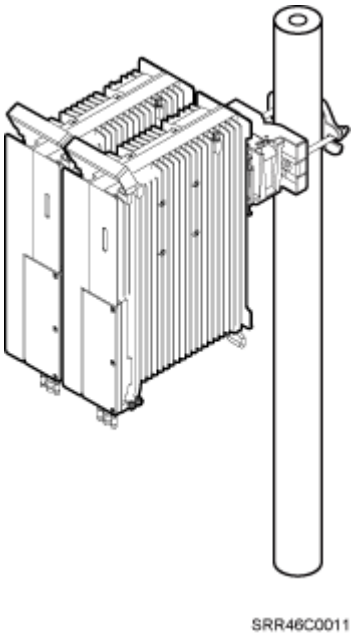

Step 2 Use an M6 inner hexagon screwdriver to remove the four inner hexagon screws from the second set of mounting brackets, and remove the main bracket from the auxiliary bracket, as shown in **Figure 8-15**.

Copyright © Huawei Technologies Co., Ltd.

Figure 8-15 Removing the RRU main bracket

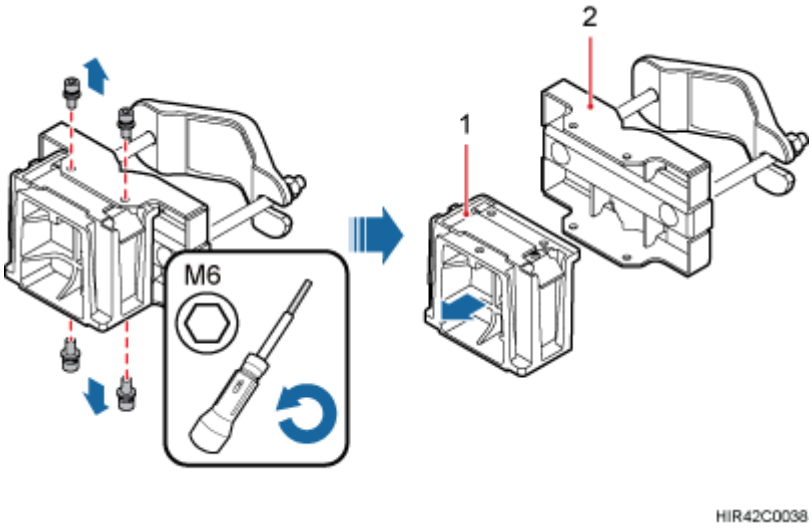

(1) Main bracket (2) Pole installation bracket

Step 3 Install the third main bracket and install the third RRU onto the third main bracket. Then use an inner hexagon torque screwdriver to tighten the captive screw into the connection holes on the top of the attachment plate and main bracket for the RRU, with a torque of 5 N·m (44.25 lbf·in.), as shown in **Figure 8-16**.

CAUTION

The third main bracket must be installed with the opening ends of U-shaped slots on both sides facing downwards.

Copyright © Huawei Technologies Co., Ltd.

Figure 8-16 Installing the third RRU onto the third main bracket

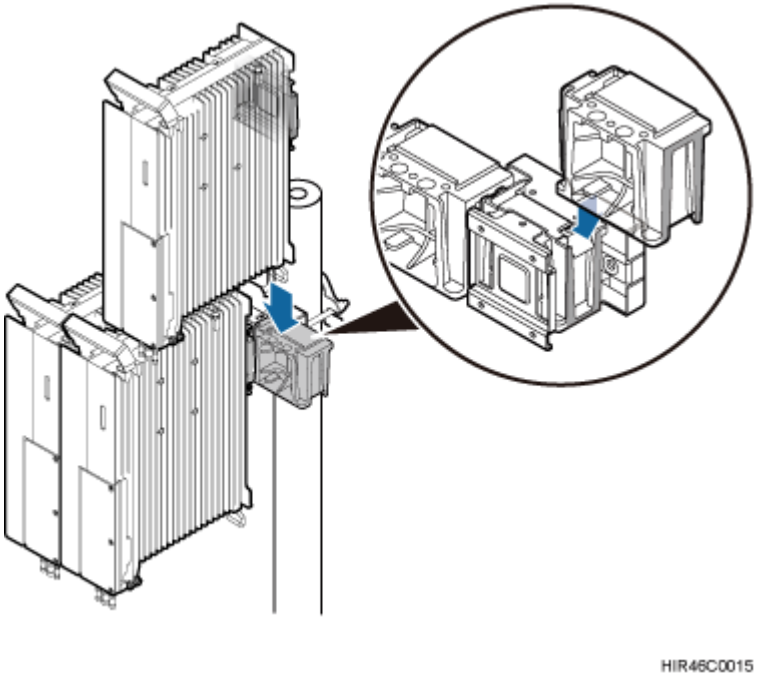

Step 4 Install the metal sheet for neighboring RRUs, as shown in **Figure 8-17**.

Figure 8-17 Installing the metal sheet

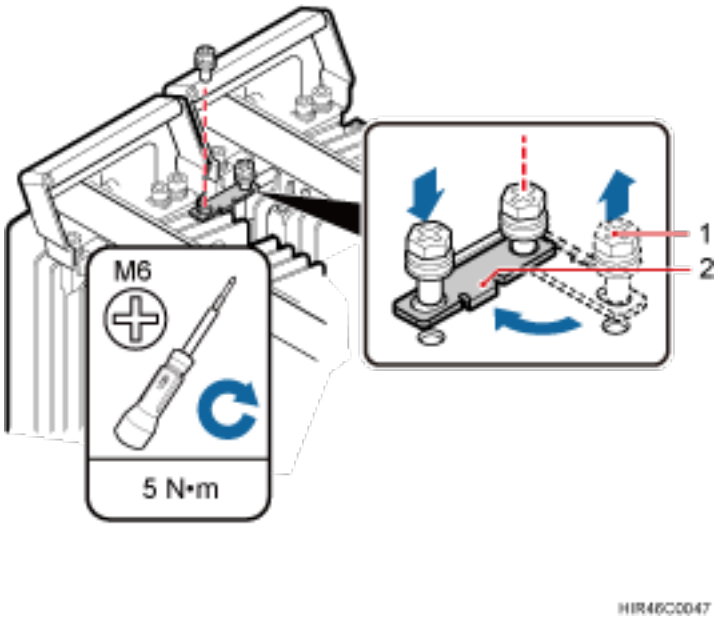

(1) Screw (2) Metal sheet

1. Use an M6 Phillips screwdriver to loosen the screw on the metal sheet farther from the handle of the first RRU and remove the screw.

Copyright © Huawei Technologies Co., Ltd.

2. Use an M6 Phillips screwdriver to loosen the screw on the metal sheet closer to handle of the first RRU. Then rotate the metal sheet to align the vacant hole in the metal sheet with a hole on the top of the second RRU.
3. Insert the removed screw into the hole on the top of the second RRU and use an M6 torque screwdriver to tighten the screw to 5 N·m (44.25 lbf·in.).

Step 5 At a position 80 mm (3.15 in.) above or below the first set of RRU mounting brackets, install the second set of RRU mounting brackets, as shown in **Figure 8-18**.

Figure 8-18 Installing the second set of RRU mounting brackets

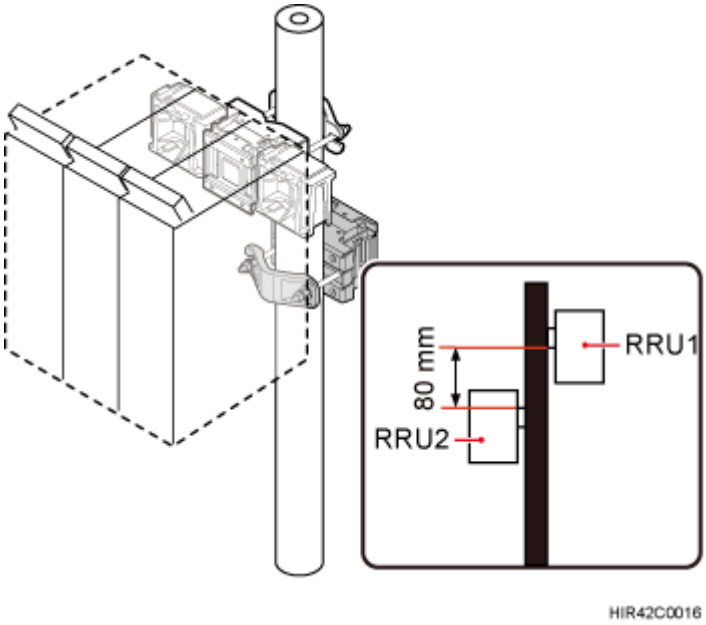

Step 6 Install the fourth RRU onto the fourth main bracket, use an inner hexagon torque screwdriver to tighten the captive screw into the holes of the attachment plate and main bracket to 5 N·m (44.25 lbf·in.) so that the attachment plate and main bracket are firmly secured, as shown in **Figure 8-19**.

Copyright © Huawei Technologies Co., Ltd.

Figure 8-19 Installing the fourth RRU onto the fourth main bracket

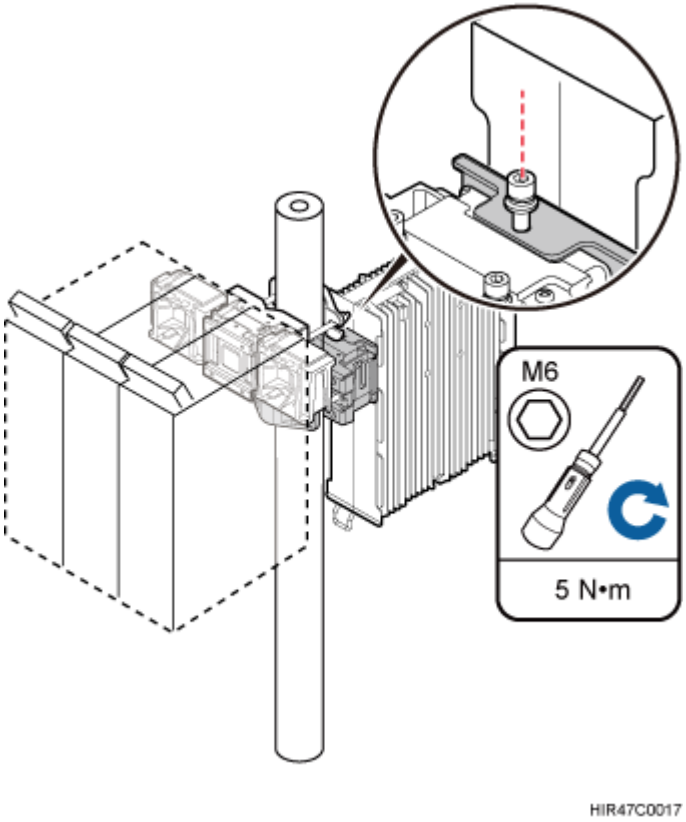

----End

8.3 Installing the RRU on U-steel

This section describes the procedure and precautions for installing the RRU on U-steel. An RRU can be installed on U-steel secured on the ground or a tower. Each piece of U-steel allows only one RRU to be installed in standard or reverse mode.

Prerequisites

Before you install an RRU on U-steel secured on a tower, the RRU and its mounting brackets are hoisted onto the tower. For details, see **7.1 Hoisting an RRU onto a Tower**.

The hoist clamp on the main bracket is secured properly.

CAUTION

- Do not stand the RRU upright because the RF ports cannot support the weight of the RRU.
- Place a foam pad or cardboard under the RRU to protect the RRU housing from damage during the installation.

Copyright © Huawei Technologies Co., Ltd.

Context

Figure 8-20 shows the top view of the RRU installed on U-steel.

CAUTION

When the width of the narrower edges of the U-steel is less than 40 mm (1.57 in.), only the a and b modes are supported.

Figure 8-20 Top view of the RRU

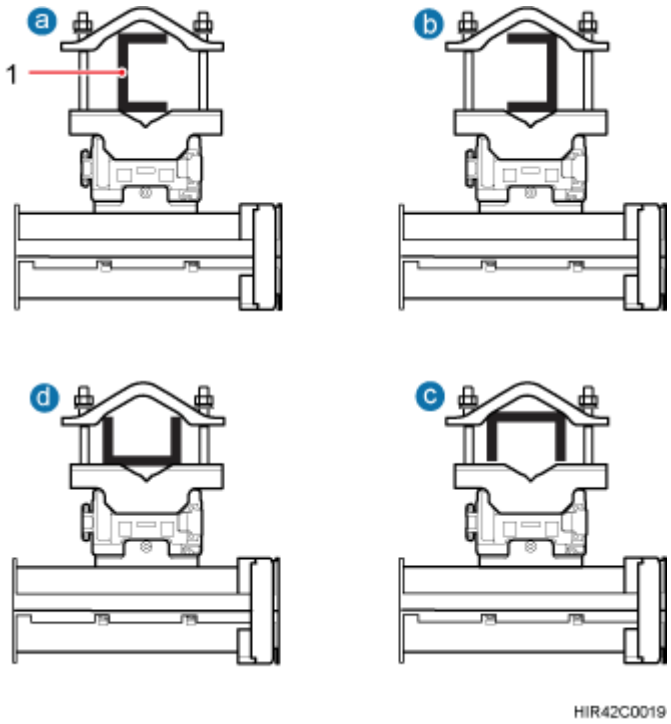

(1) U-steel

Procedure

Step 1 Determine a position for installing the mounting brackets.

- If the RRU must be installed on U-steel secured on a tower, see **3.5.1 Clearance for a Single RRU** to determine a position.
- If the RRU must be installed on U-steel secured on the ground, see **Figure 8-21** to determine a position.

Copyright © Huawei Technologies Co., Ltd.

Figure 8-21 Distance between the mounting brackets and the ground

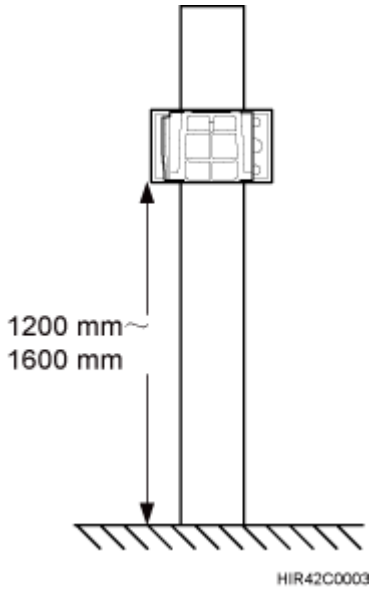

NOTE

It is recommended that the mounting brackets be installed at a height of 1200 mm (47.24 in.) to 1600 mm (62.99 in.) above the ground.

Step 2 Install the RRU mounting brackets, as shown in **Figure 8-22**.

Figure 8-22 Installing the RRU mounting brackets

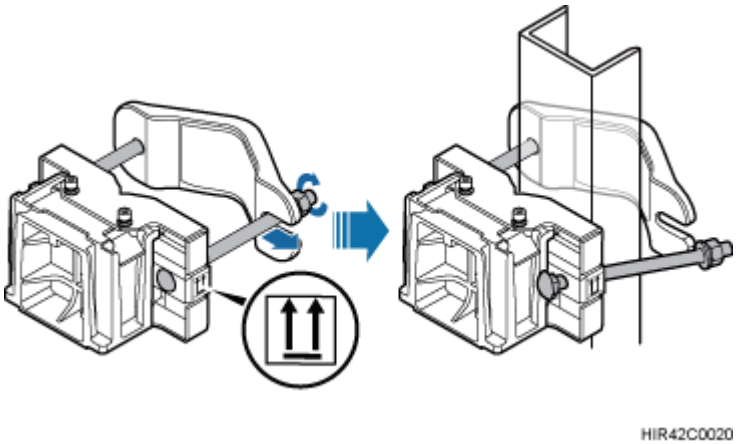

NOTE

Verify that the arrows on the mounting brackets are pointing up.

1. Adjust the position of the nut and remove one end of the square-neck bolt from the slot on the auxiliary bracket.
2. Slide the mounting brackets onto the U-steel horizontally and insert the square-neck bolt into the slot.

Copyright © Huawei Technologies Co., Ltd.

Step 3 Use a 16 mm (0.67 in.) M10 torque wrench to tighten the nuts to 40 N·m (354.03 lbf·in.) so that the mounting brackets are secured onto the U-steel, as shown in **Figure 8-23**.

CAUTION

Tighten the nuts on the two square-neck bolts alternatively. After the main and auxiliary brackets are secured properly, measure the spacing between the brackets on both sides and ensure that the spacing is the same on the two sides.

Figure 8-23 Securing the RRU mounting brackets

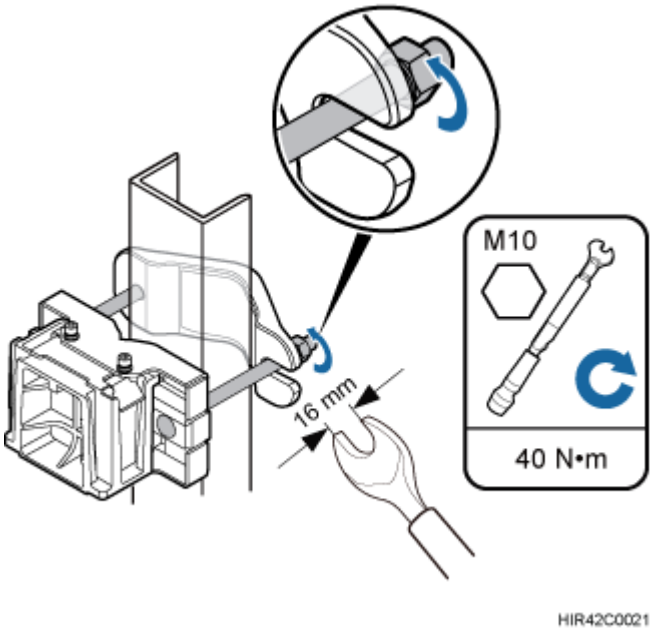

Step 4 Use an inner hexagon screwdriver to remove the attachment plate from one side of the RRU, reinstall the attachment plate onto the rear of the RRU, and tighten the four stainless screws to 5 N·m (44.25 lbf·in.), as shown in **Figure 8-24**.

Copyright © Huawei Technologies Co., Ltd.

Figure 8-24 Installing the attachment plate onto the rear of the RRU

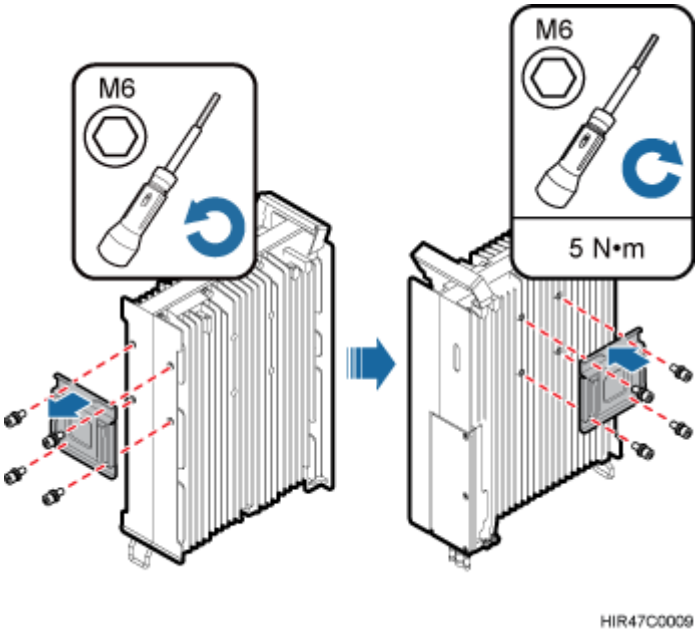

Step 5 Install the RRU onto the main bracket, as shown in **Figure 8-25**.

Figure 8-25 Installing the RRU onto the main bracket

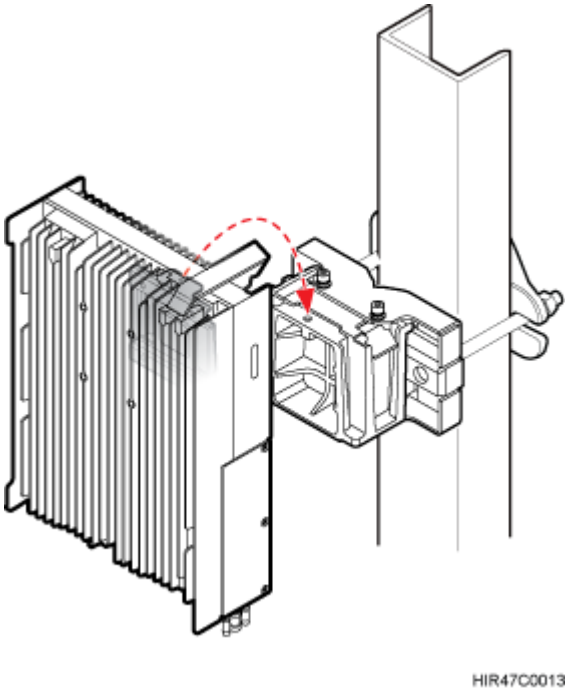

Step 6 Use an inner hexagon screwdriver to tighten the captive screw into the holes on the top of the attachment plate and main bracket to 5 N·m (44.25 lbf·in.) so that the attachment plate and main bracket are firmly secured, as shown in **Figure 8-26**.

Copyright © Huawei Technologies Co., Ltd.

Figure 8-26 Securing the captive screw into the connection hole

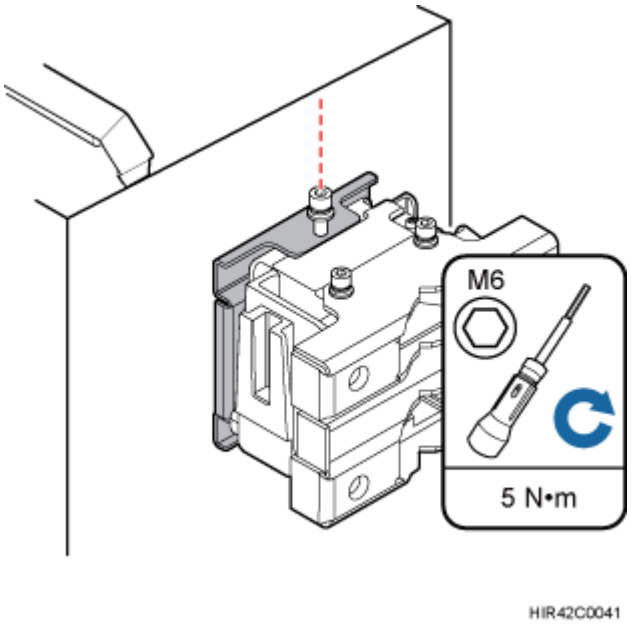

----End

8.4 Installing the RRU on Angle Steel

This section describes the procedure and precautions for installing the RRU on angle steel. An RRU can be installed on angle steel secured on the ground or a tower. Each piece of angle steel allows only one RRU to be installed in standard or reverse mode.

Prerequisites

Before you install an RRU on angle steel secured on a tower, the RRU and its mounting brackets are hoisted onto the tower. For details, see **7.1 Hoisting an RRU onto a Tower**.

The hoist clamp on the main bracket is secured properly.

CAUTION

- Do not stand the RRU upright because the RF ports cannot support the weight of the RRU.
- Place a foam pad or cardboard under the RRU to protect the RRU housing from damage during the installation.

Context

Figure 8-27 shows the top view of the RRU installed on angle steel.

Copyright © Huawei Technologies Co., Ltd.

Figure 8-27 Top view of the RRU

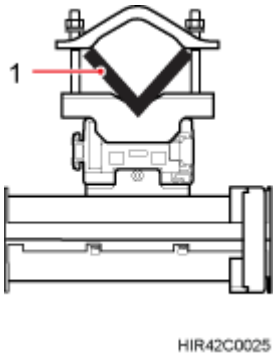

(1) Angle steel

Procedure

Step 1 Determine a position for installing the mounting brackets.

- If the RRU must be installed on angle steel secured on a tower, see **3.5.1 Clearance for a Single RRU** to determine a position.
- If the RRU must be installed on angle steel secured on the ground, see **Figure 8-28** to determine a position.

Figure 8-28 Distance between the mounting brackets and the ground

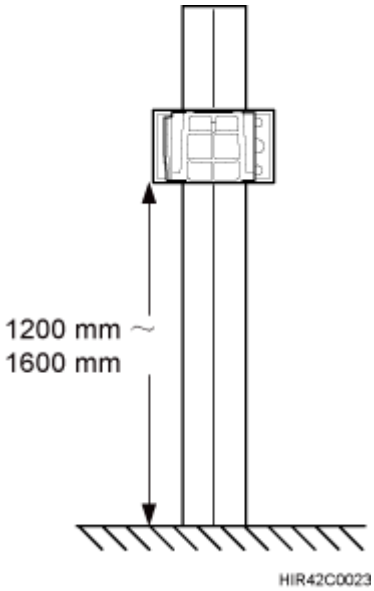

NOTE

It is recommended that the mounting brackets be installed at a height of 1200 mm (47.24 in.) to 1600 mm (62.99 in.) above the ground.

Step 2 Install the RRU mounting brackets, as shown in **Figure 8-29**.

Copyright © Huawei Technologies Co., Ltd.

Figure 8-29 Installing the RRU mounting brackets

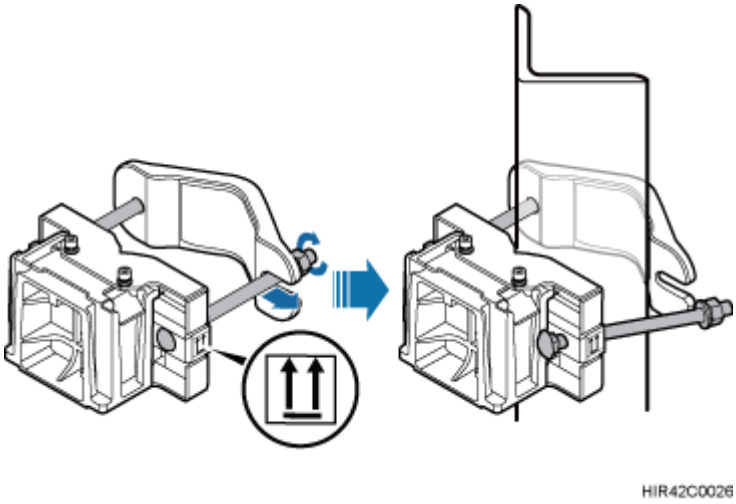

NOTE

Verify that the arrows on the mounting brackets are pointing up.

1. Adjust the position of the nut and remove one end of the square-neck bolt from the slot on the auxiliary bracket.
2. Slide the mounting brackets onto the angle steel horizontally and insert the square-neck bolt into the slot.

Step 3 Use a 16 mm (0.67 in.) M10 torque wrench to tighten the nuts to 40 N·m (354.03 lbf·in.) so that the mounting brackets are secured onto the angle steel, as shown in **Figure 8-30**.

CAUTION

Tighten the nuts on the two square-neck bolts alternatively. After the main and auxiliary brackets are secured properly, measure the spacing between the brackets on both sides and ensure that the spacing is the same on the two sides.

Copyright © Huawei Technologies Co., Ltd.

Figure 8-30 Securing the RRU mounting brackets

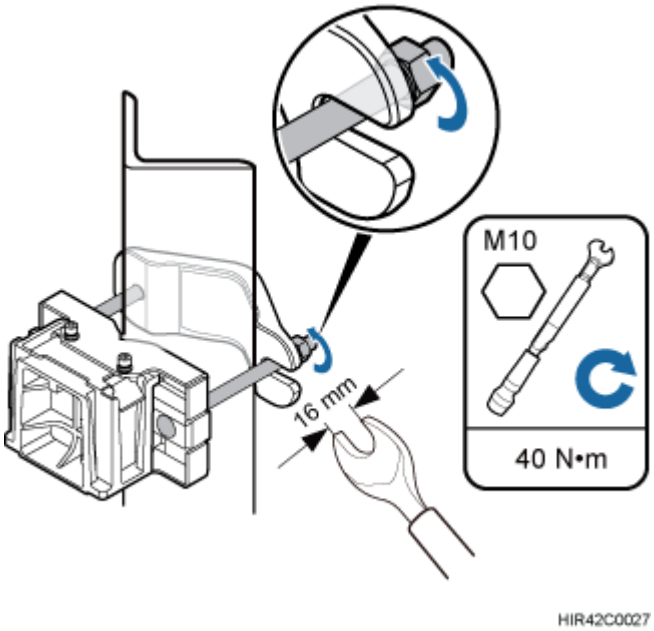

Step 4 Use an inner hexagon screwdriver to remove the attachment plate from one side of the RRU, reinstall the attachment plate onto the rear of the RRU, and tighten the four stainless screws to 5 N·m (44.25 lbf·in.), as shown in **Figure 8-31**.

Figure 8-31 Installing the attachment plate onto the rear of the RRU

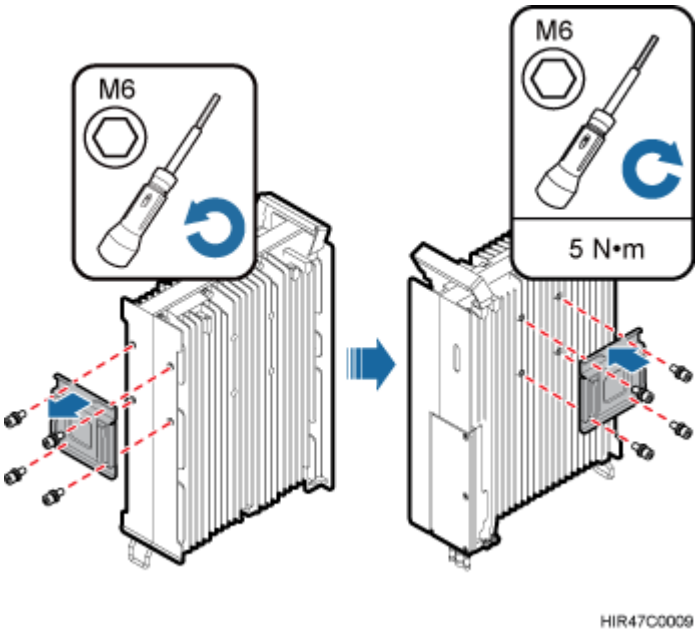

Step 5 Install the RRU onto the main bracket, as shown in **Figure 8-32**.

Copyright © Huawei Technologies Co., Ltd.

Figure 8-32 Installing the RRU onto the main bracket

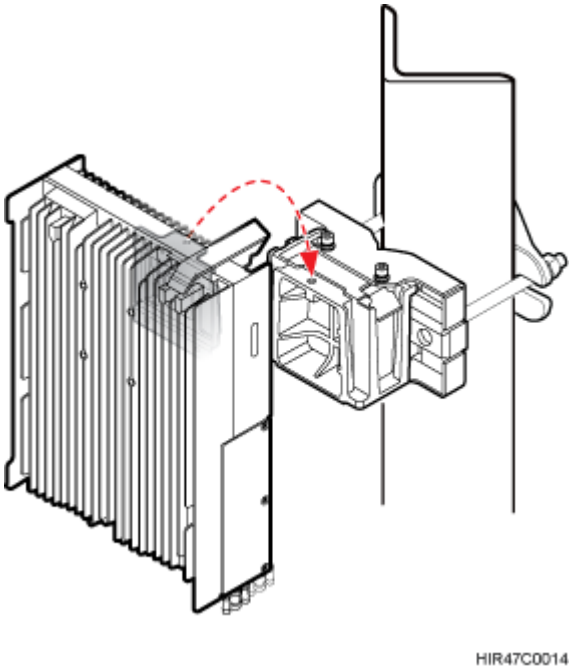

Step 6 Use an inner hexagon screwdriver to tighten the captive screw into the holes on the top of the attachment plate and main bracket to 5 N·m (44.25 lbf·in.) so that the attachment plate and main bracket are firmly secured, as shown in **Figure 8-33**.

Figure 8-33 Securing the captive screw into the connection hole

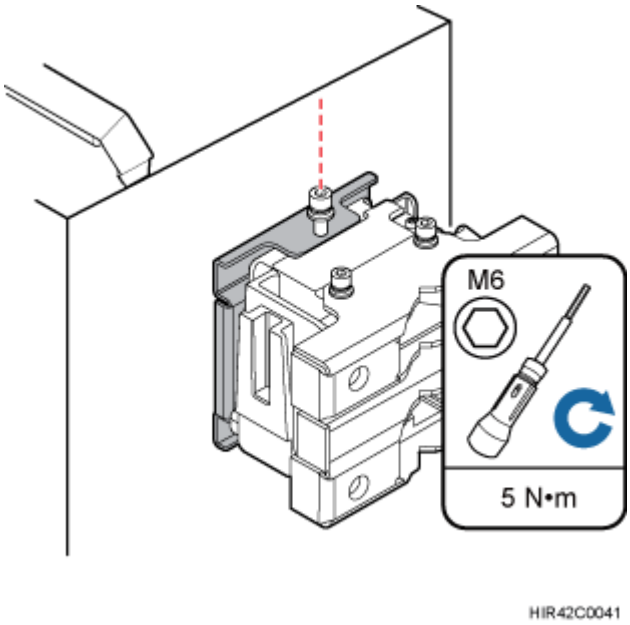

----End

Copyright © Huawei Technologies Co., Ltd.

8.5 Installing the RRU on a Wall

This section describes the procedure and precautions for installing the RRU on a wall.

Prerequisites

The hoist clamp on the main bracket is secured properly.

CAUTION

- Do not stand the RRU upright because the RF ports cannot support the weight of the RRU.
- Place a foam pad or cardboard under the RRU to protect the RRU housing from damage during the installation.

Context

The wall on which RRUs are installed must meet the following requirements:

- When a single RRU is installed, the wall must be capable of bearing at least four times the weight of the RRU.
- Expansion anchor bolts must be tightened to 30 N·m (265.52 lbf·in.) so that the bolts stay secured without damaging the wall.

Procedure

Step 1 Disassemble the RRU mounting brackets, as shown in **Figure 8-34**.

Copyright © Huawei Technologies Co., Ltd.

Figure 8-34 Disassembling the mounting brackets

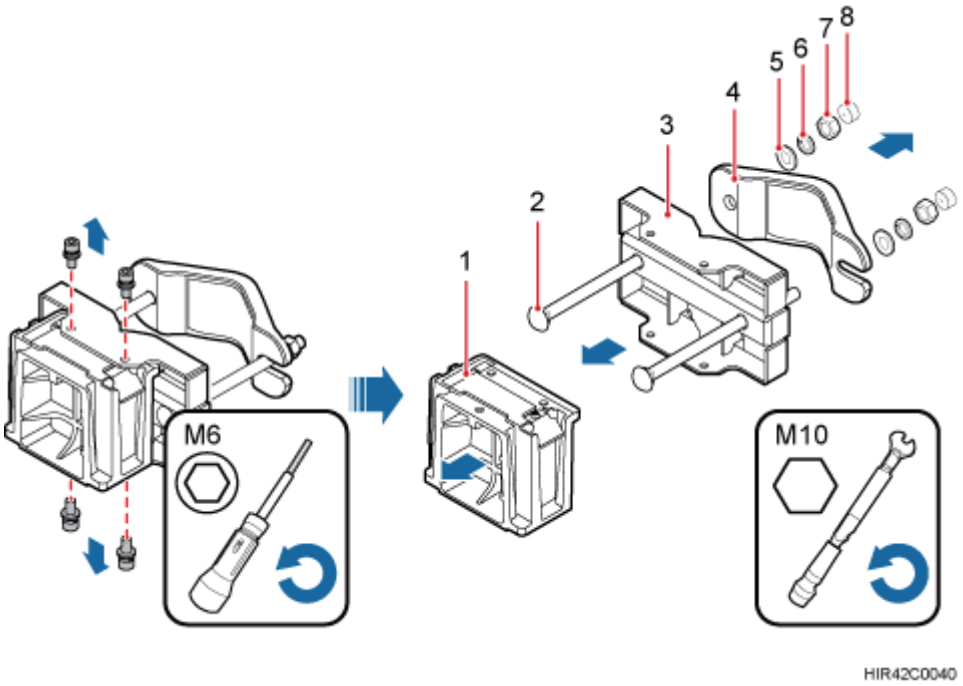

(1) Main bracket	(2) Square-neck bolt	(3) Pole installation bracket	(4) Auxiliary bracket
(5) Flat washer	(6) Spring washer	(7) Nut	(8) Plastic cap

1. Use an M6 inner hexagon torque screwdriver to remove the four inner hexagon screws on the pole installation bracket, and remove the main bracket from the pole installation bracket.
2. Use an M10 torque wrench to loosen the nuts on the two square-neck bolts, and remove the plastic cap, nuts, spring washers, flat washers, square-neck bolts, and pole installation bracket from the auxiliary bracket.

Step 2 Place the pole installation bracket against the installation position, use a level to verify that the pole installation bracket is placed horizontally, and then mark anchor points with a marker, as shown in **Figure 8-35**.

Copyright © Huawei Technologies Co., Ltd.

Figure 8-35 Marking anchor points

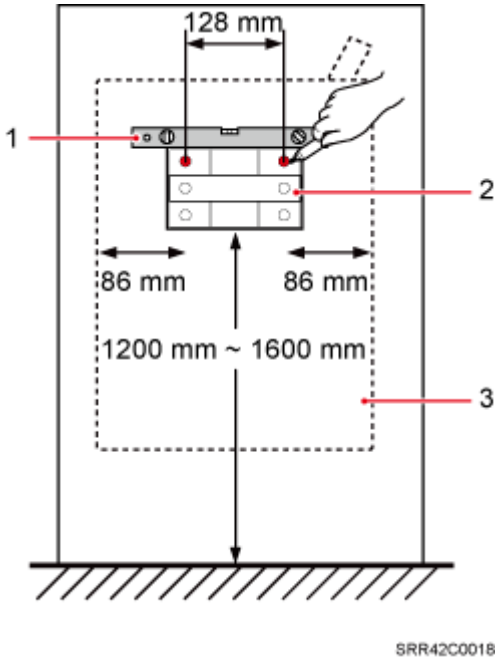

(1) Level (2) Pole installation bracket (3) RRU

NOTE

It is recommended that the pole installation bracket be installed at a height of 1200 mm (47.24 in.) to 1600 mm (62.99 in.) above the ground.

Step 3 Drill holes at the anchor points, and then insert expansion anchor bolt assemblies, as shown in **Figure 8-36**.

Figure 8-36 Drilling a hole and inserting expansion anchor bolt assemblies

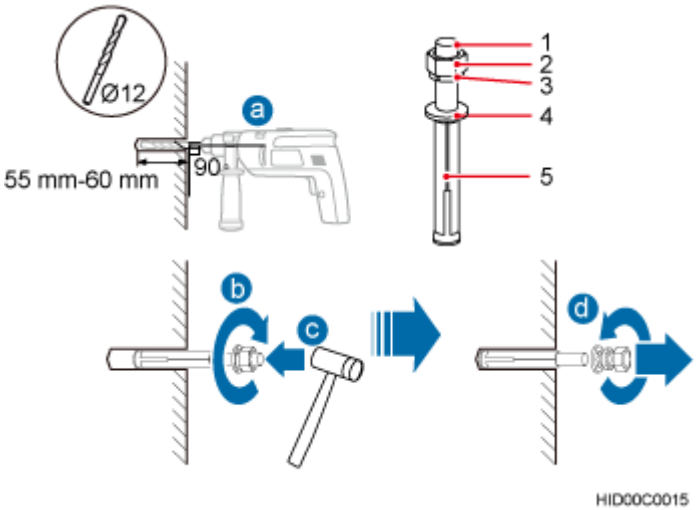

(1) M10x80 bolt (2) Nut (3) Spring washer (4) Flat washer (5) Expansion tube

Copyright © Huawei Technologies Co., Ltd.

1. Use a hammer drill with a Φ12 bit to drill holes vertically at the marked anchor points. Ensure that the depth of each hole ranges from 55 mm (2.17 in.) to 60 mm (2.36 in.).

CAUTION

Take proper safety measures to protect your eyes and respiratory tract against the dust before drilling holes.

2. Tighten the expansion anchor bolts slightly and place one vertically into each hole.
3. Use a rubber mallet to pound the expansion anchor bolt until it goes all the way into the hole.
4. Tighten and then loosen the expansion bolt, and remove the M10 bolt, spring washer, and flat washer in sequence.

CAUTION

After dismantling an expansion anchor bolt, ensure that the top of the expansion tube is on the same level as the wall. Otherwise, the device cannot be installed on the wall evenly and securely.

Step 4 Install the pole installation bracket on the expansion anchor bolts, place the flat washers, spring washers, and nuts through the expansion anchor bolts in sequence, and then use a 16 mm (0.63 in.) torque socket to tighten the nuts to 30 N·m (265.52 lbf·in.), as shown in **Figure 8-37**.

Figure 8-37 Installing the pole installation bracket on the expansion anchor bolts

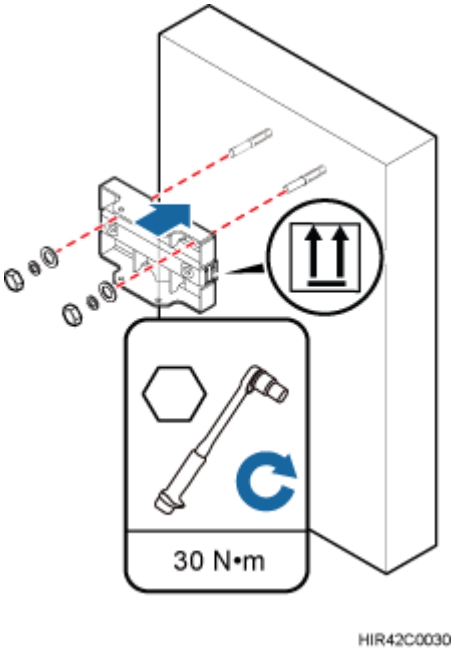

Copyright © Huawei Technologies Co., Ltd.

CAUTION

Verify that the arrows on the pole installation bracket are pointing up.

Step 5 Install the main bracket onto the pole installation bracket, and use an inner hexagon screwdriver to tighten four M6x16 inner hexagon screws to 5 N·m (44.25 lbf·in.) so that the main bracket and pole installation bracket are firmly secured, as shown in **Figure 8-38**.

Figure 8-38 Installing the main bracket

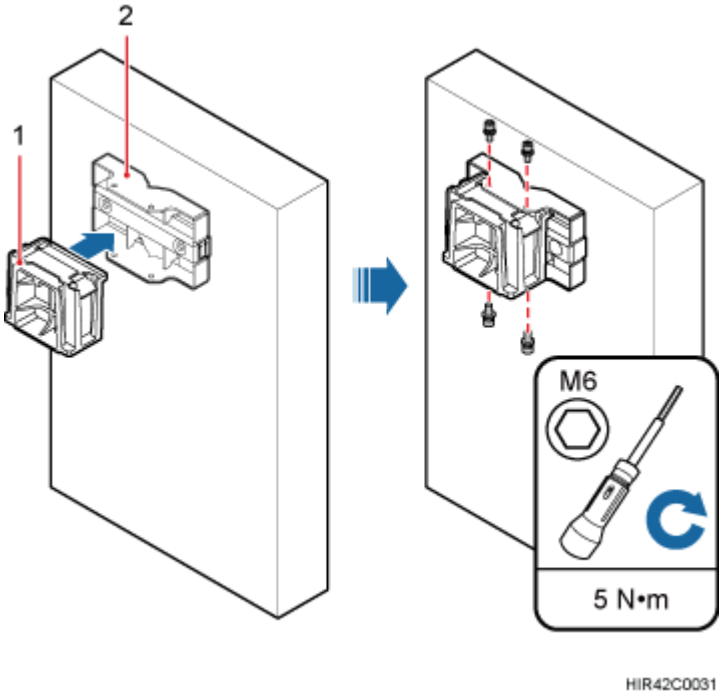

(1) Main bracket	(2) Pole installation bracket

Step 6 Use an inner hexagon screwdriver to remove the attachment plate from one side of the RRU, reinstall the attachment plate onto the rear of the RRU, and tighten the four stainless screws to 5 N·m (44.25 lbf·in.), as shown in **Figure 8-39**.

Copyright © Huawei Technologies Co., Ltd.

Figure 8-39 Installing the attachment plate onto the rear of the RRU

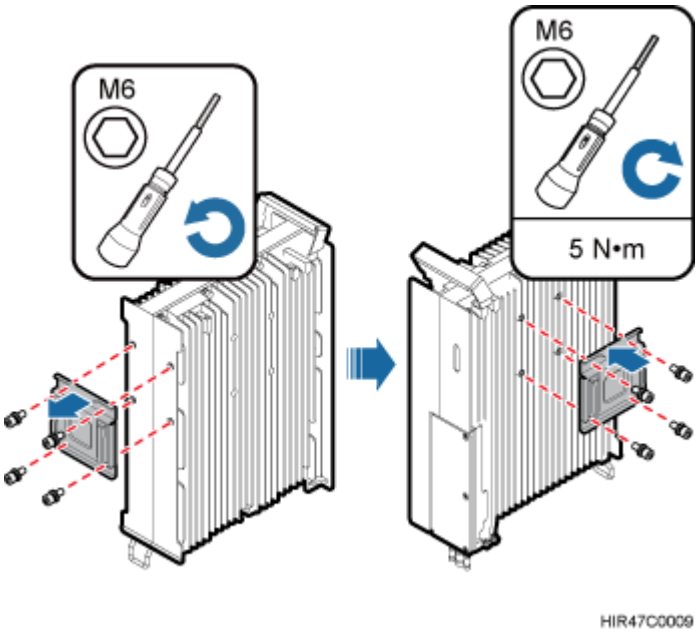

Step 7 Install the RRU onto the main bracket, as shown in **Figure 8-40**.

Figure 8-40 Installing the RRU onto the main bracket

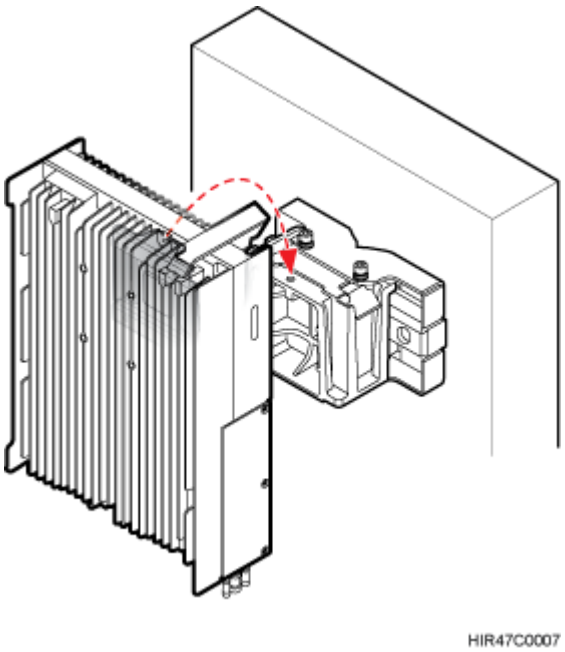

Step 8 Use an inner hexagon screwdriver to tighten the captive screw into the holes on the top of the attachment plate and main bracket to 5 N·m (44.25 lbf·in.) so that the attachment plate and main bracket are firmly secured, as shown in **Figure 8-41**.

Copyright © Huawei Technologies Co., Ltd.

Figure 8-41 Securing the captive screw into the connection hole

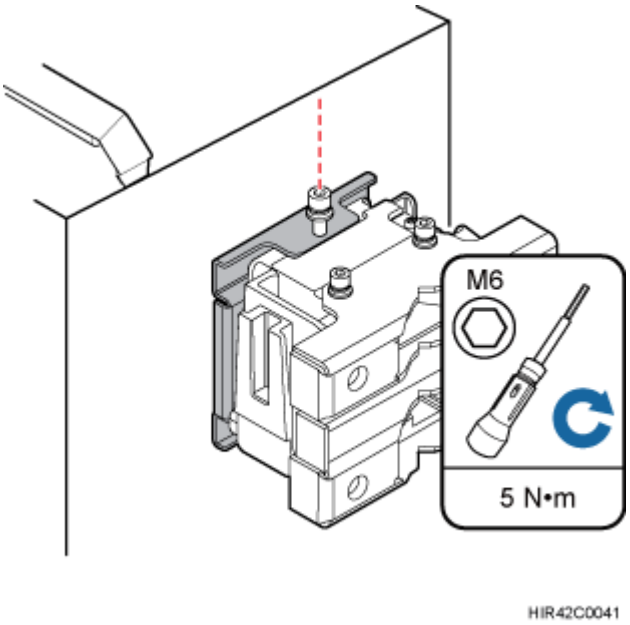

----End

8.6 Installing an RRU on an IFS06

This section describes the procedure and precautions for installing an RRU on an IFS06.

Prerequisites

The hoist clamp on the main bracket is secured properly.

CAUTION

- Do not stand the RRU upright because the RF ports cannot support the weight of the RRU.
- Place a foam pad or cardboard under the RRU to protect the RRU housing from damage during the installation.

Context

- The upper and lower adjustable beams on an IFS06 can be moved up and down to fit for heights of RRUs.
- RRUs can be installed on an IFS06 only when the ambient temperature is higher than or equal to the lowest working temperature of the RRU and at least 5°C (41°F) lower than the highest working temperature of the RRU. In this scenario, the IFS06 supports at least three RRUs. When the ambient temperature is higher than or equal to the lowest working temperature of the RRU and at least 10°C (50°F) lower than the highest working temperature of the RRU, the IFS06 supports a maximum of six RRUs.

Copyright © Huawei Technologies Co., Ltd.

NOTE

For details about the operating temperature of the RRU, see section "Technical Specifications of RRUs" in *3900 Series Base Station Technical Description*.

- Install RRUs in the sequence from bottom to top and from left to right.
- This section describes how to install an RRU in height-unrestricted scenarios. The procedure for installing an RRU in height-restricted scenarios is the same as that in height-unrestricted scenarios.
- When installing the pole installation bracket, you need to use the M10x50 bolts delivered with the IFS06.
- Rubber washers are easily compressed or broken, whereas do not need to be replaced.

Procedure

Step 1 Disassemble the RRU mounting brackets, as shown in **Figure 8-42**.

Figure 8-42 Disassembling the mounting brackets

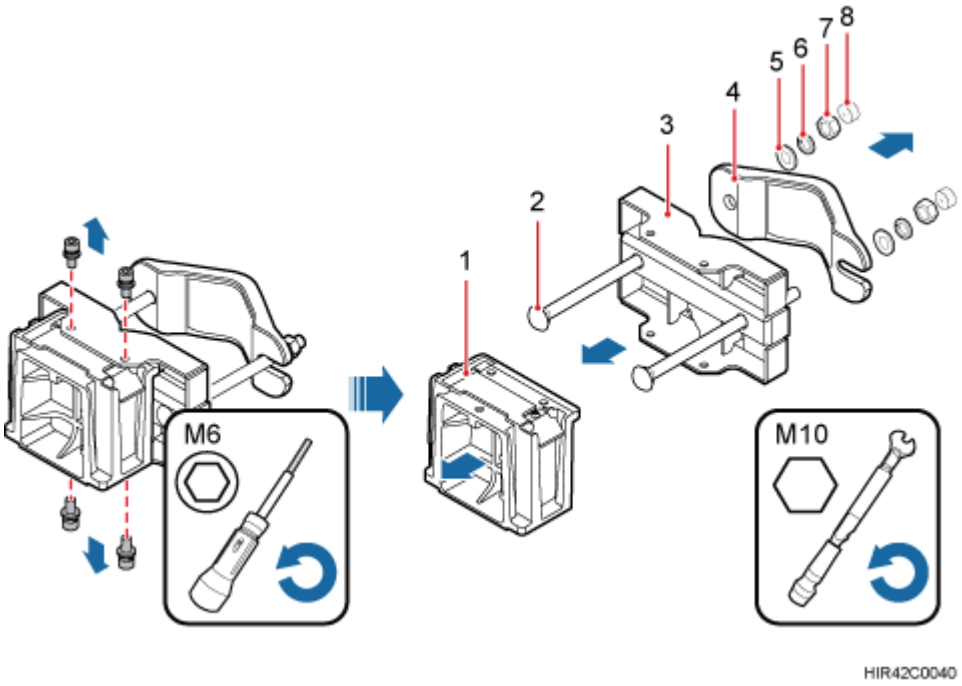

(1) Main bracket	(2) Square-neck bolt	(3) Pole installation bracket	(4) Auxiliary bracket
(5) Flat washer	(6) Spring washer	(7) Nut	(8) Plastic cap

1. Use an M6 inner hexagon torque screwdriver to remove the four inner hexagon screws on the pole installation bracket, and remove the main bracket from the pole installation bracket.
2. Use an M10 torque wrench to loosen the nuts on the two square-neck bolts, and remove the plastic cap, nuts, spring washers, flat washers, square-neck bolts, and pole installation bracket from the auxiliary bracket.

Step 2 Use the M10x50 bolts delivered with the IFS06 to secure the pole installation bracket to the IFS06, and then use an M10 torque socket wrench to secure the bolts to 30 N·m (265.52 lbf·in.).

Copyright © Huawei Technologies Co., Ltd.

CAUTION

Ensure that the arrows on the pole installation bracket are pointing up.

- Height-restricted scenarios

Use one finger to push and remove the rubber plugs on the beam and then install the pole installation bracket, as shown in **Figure 8-43**.

Figure 8-43 Installing the pole installation bracket in height-restricted scenarios

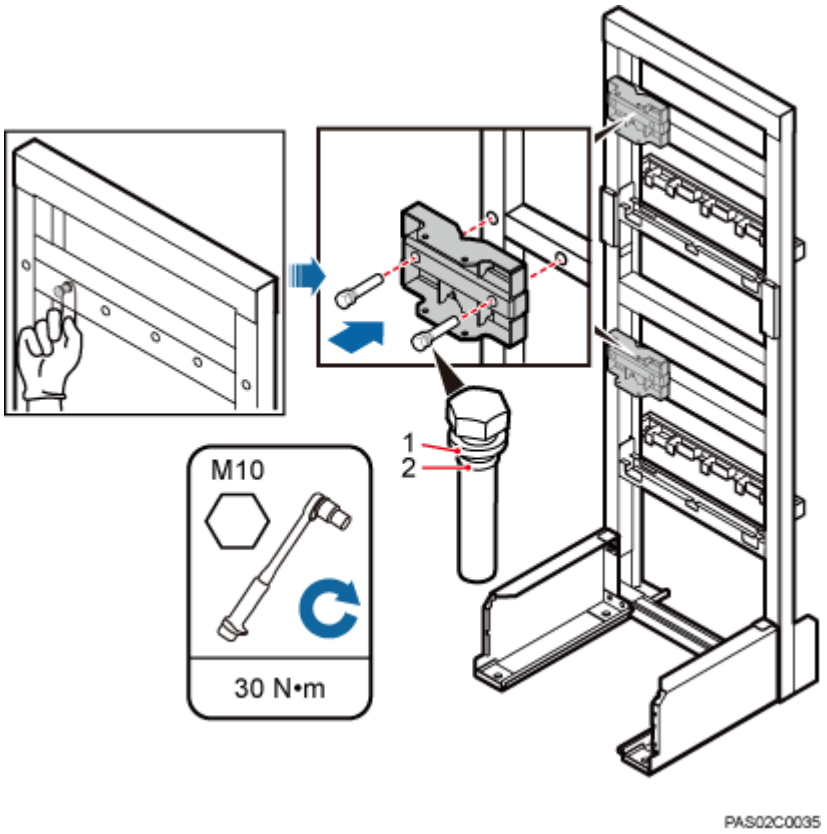

(1) Spring washer (2) Rubber washer

- Height-unrestricted scenarios

Install the pole installation bracket, as shown in **Figure 8-44**.

Copyright © Huawei Technologies Co., Ltd.

Figure 8-44 Installing the pole installation bracket in height-unrestricted scenarios

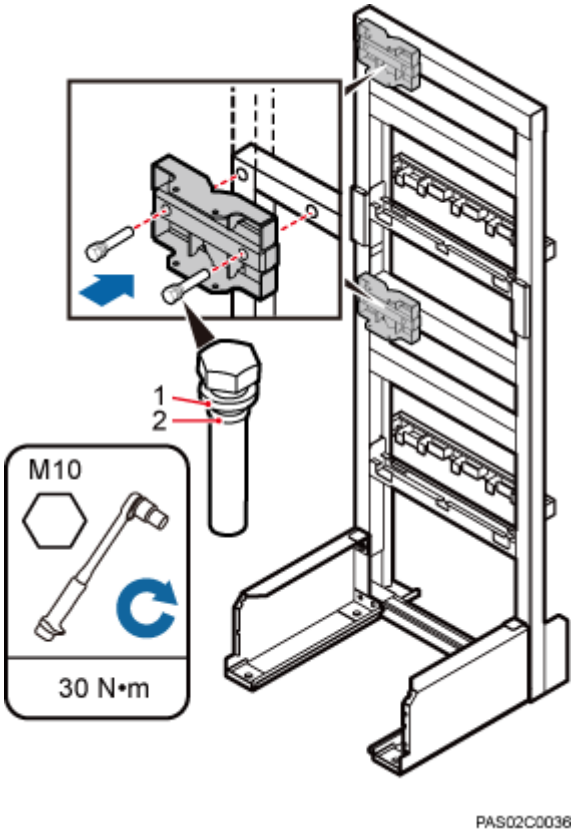

(1) Spring washer (2) Rubber washer

Step 3 Attach the main bracket to the pole installation bracket, and use an inner hexagon screwdriver to tighten four M6x16 screws to 5 N·m (44.25 lbf·in.) so that the main bracket and pole installation bracket are firmly secured, as shown in **Figure 8-45**.

Copyright © Huawei Technologies Co., Ltd.

Figure 8-45 Installing the main bracket

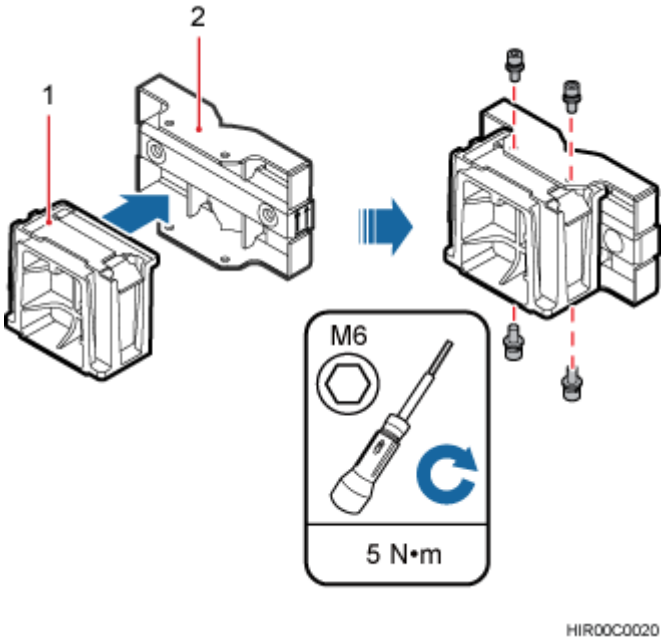

(1) Main bracket (2) Pole installation bracket

Step 4 Attach the RRU to the main bracket, and then use an inner hexagon screwdriver to tighten the captive screw into the holes of the attachment plate and main bracket to 5 N·m (44.25 lbf·in.) so that the attachment plate and main bracket are firmly secured, as shown in **Figure 8-46**.

Copyright © Huawei Technologies Co., Ltd.

Figure 8-46 Installing the RRU onto the main bracket

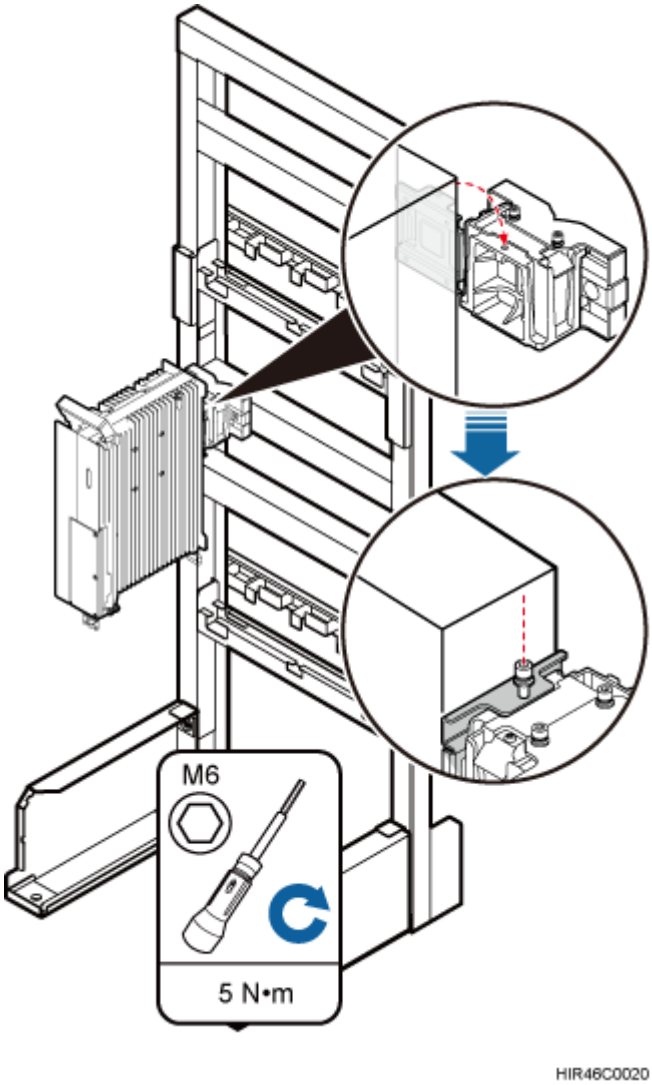

Step 5 Install the RRUs on the lower level from left to right, as shown in **Figure 8-47**.

Copyright © Huawei Technologies Co., Ltd.

Figure 8-47 Installing RRUs on the lower level

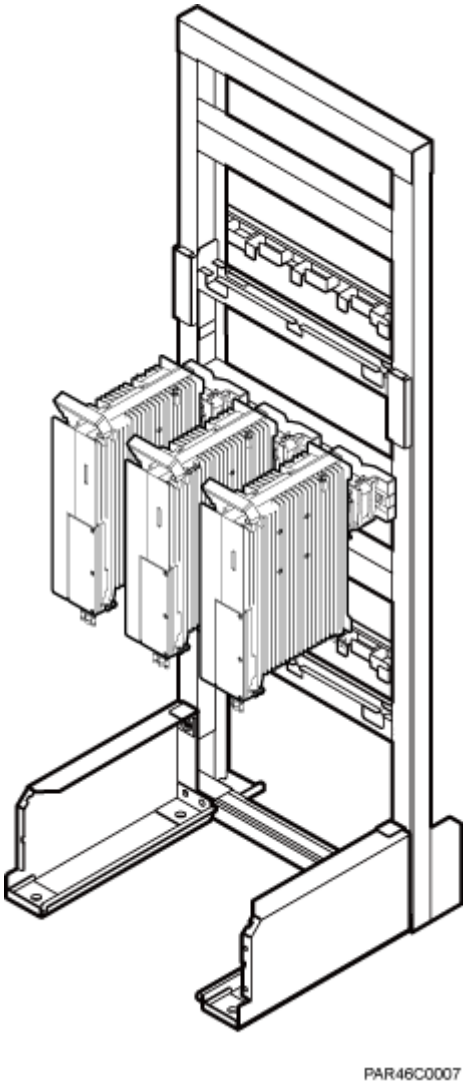

Step 6 **Optional:** When the ambient temperature is equal to or higher than the lowest operating temperature of the RRU and at least 10°C (10°F) lower than the highest operating temperature of the RRU, repeat the preceding steps to install the RRUs on the higher level, as shown in **Figure 8-48**.

Copyright © Huawei Technologies Co., Ltd.

Figure 8-48 Installing RRUs on the higher level

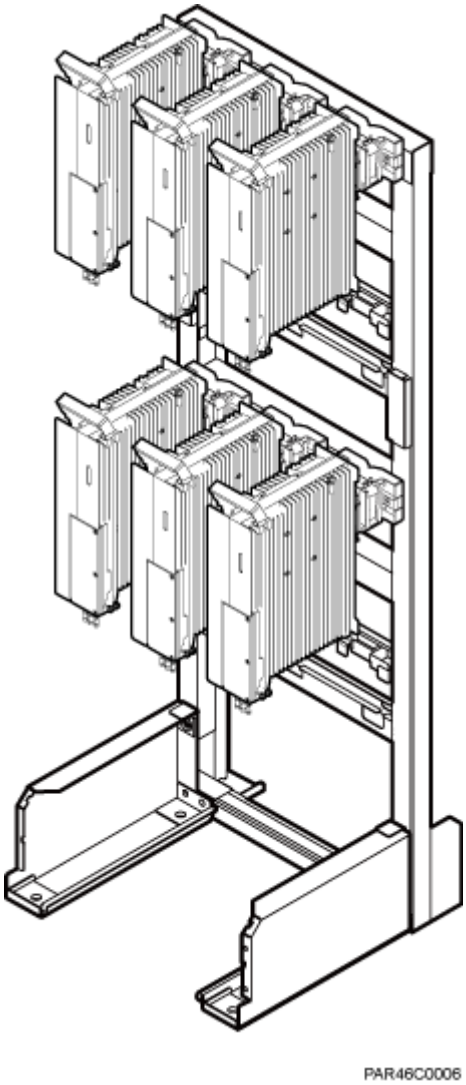

----End

Copyright © Huawei Technologies Co., Ltd.

9 Installing RRU Cables

About This Chapter

This chapter describes the procedure for installing RRU cables.

9.1 Cabling Requirements
Cables must be routed according to the specified cabling requirements to prevent signal interference.

9.2 Cable Connections
This section describes the cable connections for a single RRU and multiple RRUs.

9.3 Installation Process
This section describes the process of installing RRU cables.

9.4 RRU Cable List
This section describes RRU cable connections.

9.5 Installing an RRU PGND Cable
This section describes the procedure for installing an RRU PGND cable.

9.6 Installing an RRU RF Jumper
This section describes the procedure for installing an RRU RF jumper.

9.7 Installing an RRU AISG Multi-Wire Cable and AISG Extension Cable
This section describes the procedures for installing an RRU AISG multi-wire cable and AISG extension cable.

9.8 Installing an RRU Alarm Cable
This section describes the procedure for installing an RRU alarm cable.

9.9 Opening the Cover Plate of an RRU Cabling Cavity
This section describes the procedure for opening the cover plate of an RRU cabling cavity.

9.10 Installing an RRU Power Cable
This section describes the procedure for installing an RRU power cable.

9.11 Installing a CPRI Fiber Optic Cable
This section describes the procedure for installing a CPRI fiber optic cable.

9.12 Closing the Cover Plate of an RRU Cabling Cavity

Copyright © Huawei Technologies Co., Ltd.

This section describes the procedure for closing the cover plate of an RRU cabling cavity.

Copyright © Huawei Technologies Co., Ltd.

9.1 Cabling Requirements

Cables must be routed according to the specified cabling requirements to prevent signal interference.

NOTE

If a cable listed below is not required, skip the routing requirements of the cable.

General Cabling Requirements

Requirements for Bending Radius

- The bending radius of the 7/8" feeder must be more than 250 mm (9.84 in.), and the bending radius of the 5/4" feeder must be more than 380 mm (14.96 in.).
- The bending radius of the 1/4" jumper must be more than 35 mm (1.38 in.). The bending radius of the super-flexible 1/2" jumper must be more than 50 mm (1.97 in.), and the bending radius of the ordinary 1/2" jumper must be more than 127 mm (5 in.).
- The bending radius of the power cable or PGND cable must be at least three times the diameter of the cable.
- The bending radius of a fiber optic cable is at least 20 times the diameter of the fiber optic cable, and the minimum bending radius of the breakout cable at each end of the fiber optic cable is 30 mm (1.18 in.).
- The bending radius of the E1/T1 cable must be at least three times the diameter of the cable.
- The bending radius of the signal cable must be at least five times the diameter of the cable.

Requirements for Cable Binding

- The same types of cable must be bound together.
- Different types of cable must be separately routed with the minimum spacing of 30 mm (1.18 in.) and cannot be entangled.
- The cables must be bound tightly and neatly. The sheaths of the cables must not be damaged.
- Cable ties are installed in the same direction, and those at the same horizontal line must be in a straight line.
- The excess of indoor cable ties is trimmed off, and the excess of outdoor cable ties allows about 5 mm (0.2 in.), without remaining rough edges.
- Labels or nameplates must be attached to both ends, joints, or turns of cables after they are installed.

Security Requirements

- Cables should be placed away from sharp objects or wall burrs. If these positions are inevitable, protect the cables with protection pipes.
- Cables must be routed away from heat sources, or heat-insulation materials are added between cables and heat sources.
- Sufficient slack (recommended for about 0.1 m [0.33 ft]) is provided in cables at turns or the position close to a device, facilitating cable and device maintenance.

Indoor Cabling Requirements

- Cables are routed indoors through the feeder window.

Copyright © Huawei Technologies Co., Ltd.

- Drip loops must be made outside the feeder window, and the requirements for the minimum bending radius are met.
- When cables are routed indoors, engineers are required indoors for cooperation.
- The feeder window must be waterproofed.

Outdoor Cabling Requirements

- Cables routed outdoors must be led through a pipe when they may be damaged.
- AC power cables, transmission cables, and cables buried in the ground must be protected.
- If cables at the cabinet bottom need to be routed through a pipe along the ground, lead the pipe into the cabinet base for about 30 mm (1.18 in.) to 50 mm (1.97 in.), not into the cabinet. Block the pipe with waterproof tape or silicon gel, and secure the pipe to the cable hole at the cabinet bottom with metal piece.
- If cables at the cabinet bottom need to be routed through a pipe along the metal cable trough, do not lead the pipe into the cabinet base. The cable trough must be sealed and routed through the cable hole at the cabinet bottom.
- Cables are secured with cable clips.
- Cables are routed neatly along the specified cabling direction and secured with cable clips.
- The positions for cable clips are determined onsite. For example, the cable clips for the 7/8" feeder are installed at the spacing of 1.5 m (4.92 ft) to 2 m (6.56 ft) in the same direction, and the cable clips for the power cables are installed at the spacing of 1.5 m (4.92 ft) to 2 m (6.56 ft) in the same direction.
- Cable clips must be vertical with cables, and the cables in a cable clip must be parallel.
- After routing cables neatly and correctly, tighten the screws on cable clips.

Secure cables on the cable tray, as shown in **Figure 9-1**.

Figure 9-1 Securing cables on the cable tray

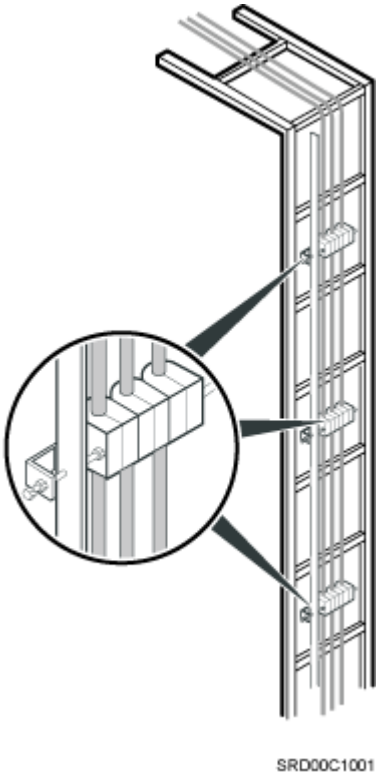

Copyright © Huawei Technologies Co., Ltd.

Secure cables on the tower, as shown in **Figure 9-2**.

Figure 9-2 Securing cables on the tower

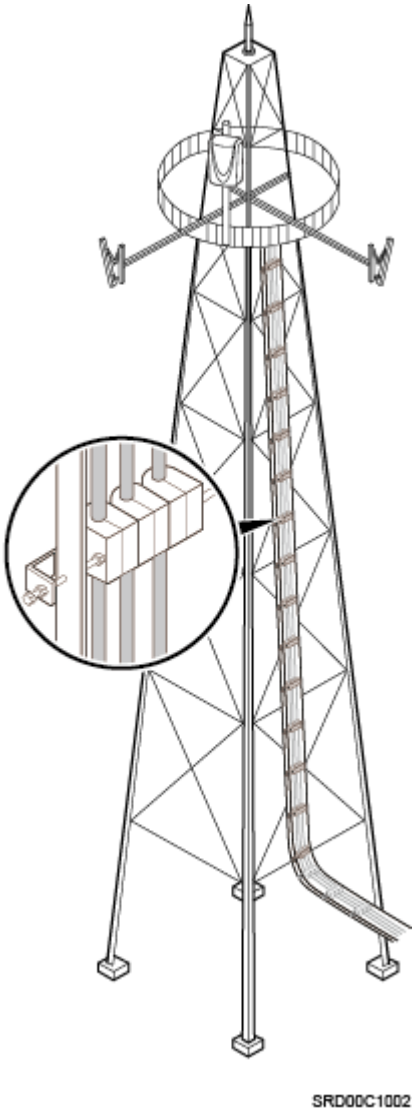

Special Cabling Requirements

Cabling Requirements for Power Cables

- Power cables must be installed in the position specified in engineering design documents.
- If the length of power cables is insufficient, replace the cables rather than adding connectors or soldering joints to lengthen the cables.
- Cables must be routed by only qualified and trained personnel before all preparations are made.
- Cables are routed in an untangled and orderly fashion.

Copyright © Huawei Technologies Co., Ltd.

- If DC power cables need to be routed on the tower platform, lay out the cables on the guardrail with the shortest distance and route the cables along the guardrail.
- If DC power cables need to be routed close to a device on the tower, secure the cables to the guardrail or pole with cable clips. The device cannot be far away from the position for securing the cables.

Cabling Requirements for PGND Cables

- PGND cables for the base station must be connected to the same ground bar.
- PGND cables must be buried in the ground or routed indoors. They should not be routed overhead before they are led into the equipment room.
- The exterior of the coaxial wire and the shield layer of the shielded cable must have proper electrical contact with the metal surface of the equipment to which they are connected.
- PGND cables and signal cables must be installed in an untangled and orderly fashion. A certain distance must be reserved between them to prevent interference from each other.
- Fuses or switches must not be installed on the PGND cables.
- Other devices must not be used for electrical connections of the PGND cables.
- All the metal parts in the housing of the equipment must be reliably connected to the ground terminal.

Cabling Requirements for E1 Cables

- E1 cables must not cross power cables, PGND cables, or RF cables when routed. If transmission cables are routed with power cables, PGND cables, or RF cables in parallel, the spacing between them must be greater than 30 mm (1.18 in.).
- E1 cables are routed straightly and bound neatly with cable ties.
- Sufficient slack is provided in E1 cables at turns.
- E1 cables cannot be squeezed by the cabinet door when routed through the cabinet, as shown in **Figure 9-3**.

Figure 9-3 E1 cables routed through the cabinet

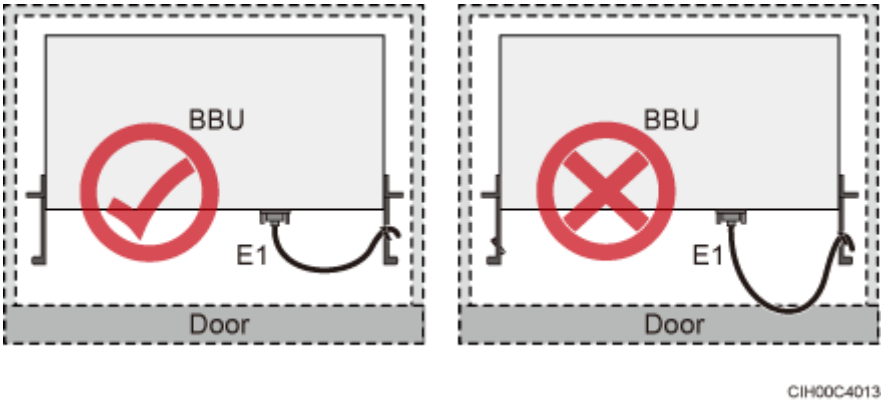

Cabling Requirements for Fiber Optic Cables

- Fiber optic cables must be routed by at least three qualified and trained personnel before all preparations are made.

Copyright © Huawei Technologies Co., Ltd.

- Fiber optic cables are used within the temperature range of -40°C to 60°C. If the current temperature is out of the range, make protection measures or route the cables again.
- Cables are routed in an untangled and orderly fashion.
- Do not bind fiber optic cables at turns.
- Do not stretch, step on, or place heavy objects on fiber optic cables. Keep the cables away from sharp objects.
- When fiber optic cables are routed, the excess of the cables must be coiled around special devices, such as a fiber coiler.
- When coiling fiber optic cables, apply even strength. Do not bend the cables with force.
- Vacant optical connectors must be covered with dustproof caps.
- Fiber optic cables cannot be squeezed by the cabinet door when routed through the cabinet, as shown in **Figure 9-4**, **Figure 9-5** and **Figure 9-6**.

Figure 9-4 CPRI fiber optic cables routed through the cabinet (1)

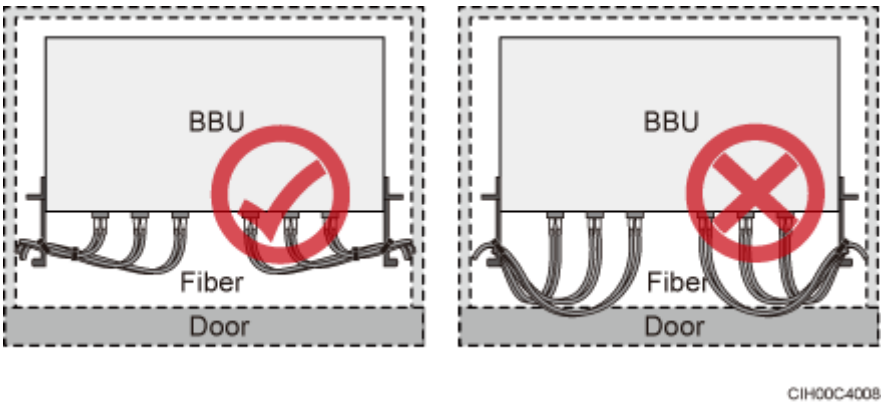

Figure 9-5 CPRI fiber optic cables routed through the cabinet (2)

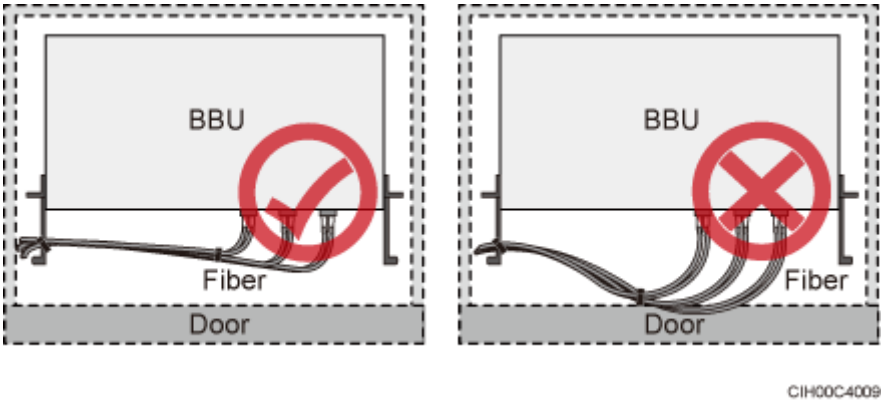

Copyright © Huawei Technologies Co., Ltd.

Figure 9-6 FE/GE cables routed through the cabinet

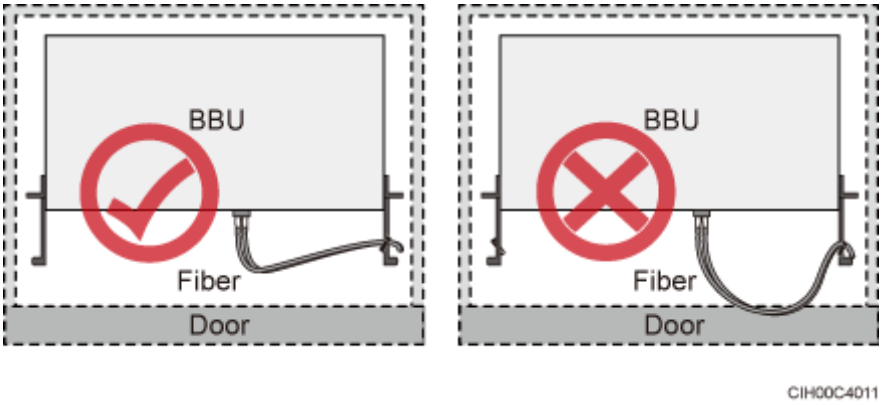

- If fiber optic cables need to be routed on the tower platform, lay out the cables on the guardrail with the shortest distance and route the cables along the guardrail.
- If fiber optic cables need to be routed close to a device on the tower, secure the cables to the guardrail or pole with cable clips. The device cannot be far away from the position for securing the cables.
- If the fiber optic cables close to a device are too long, coil the excess of the cables and secure them on the tower.

9.2 Cable Connections

This section describes the cable connections for a single RRU and multiple RRUs.

NOTE

- A lower-level RRU obtains power directly from the external power system, but not from an upper-level RRU using a power cable.

Figure 9-7 shows the cable connections for a single RRU.

Copyright © Huawei Technologies Co., Ltd.

Figure 9-7 Cable connections for a single RRU

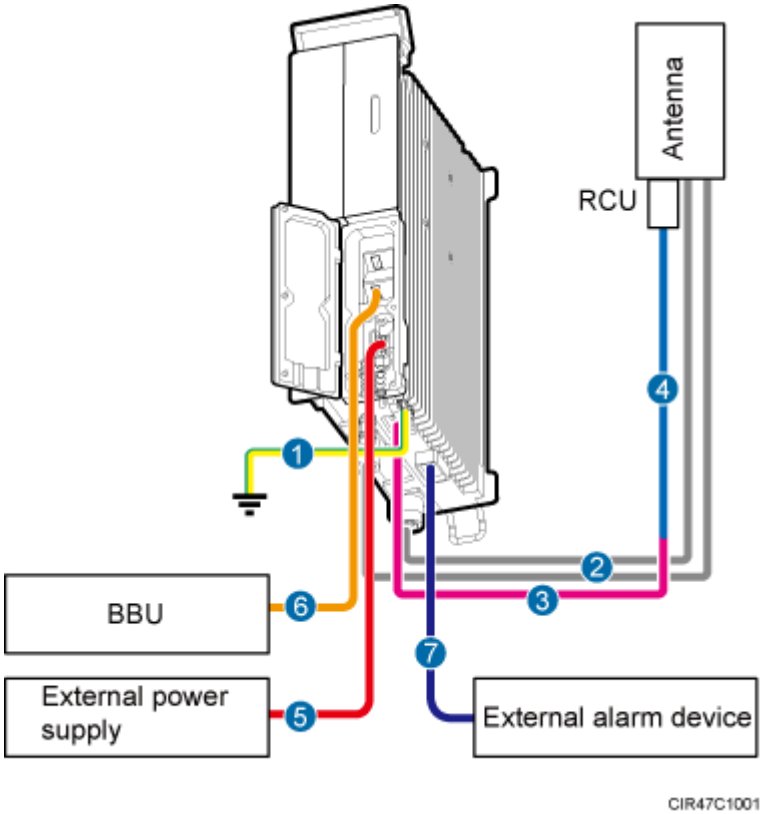

(1) PGND cable	(2) RRU RF jumper	(3) RRU AISG multi-wire cable
(4) RRU AISG extension cable	(5) RRU power cable	(6) CPRI fiber optic cable
(7) RRU alarm cable	-	-

Figure 9-8 shows the cable connections for multiple RRUs.

Copyright © Huawei Technologies Co., Ltd.

Figure 9-8 Cable connections for multiple RRUs

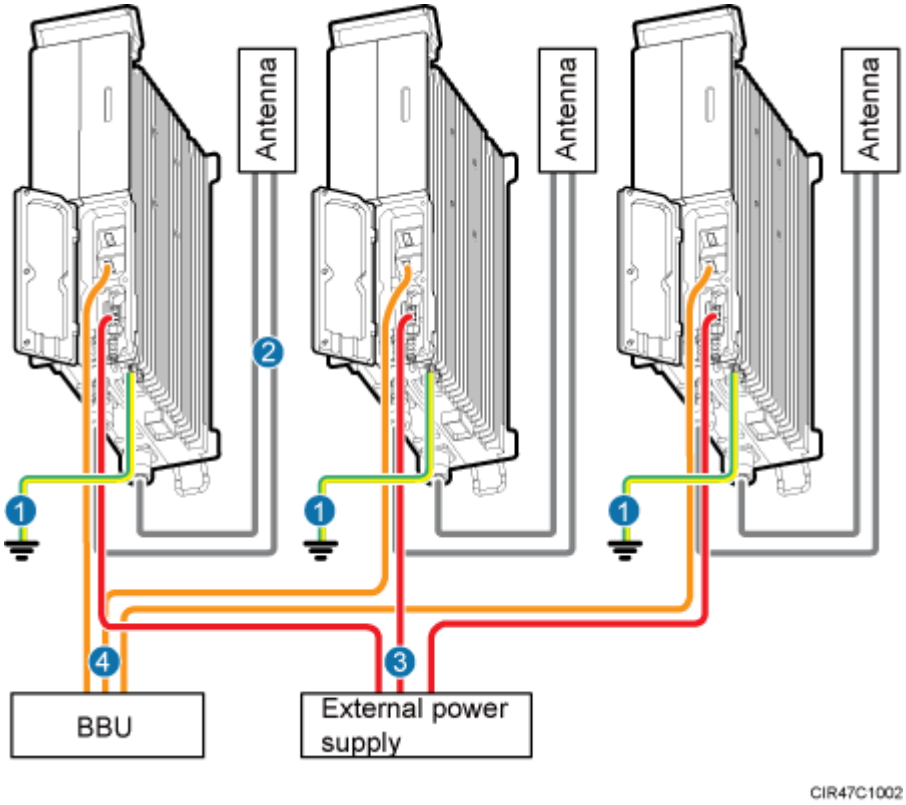

(1) PGND cable	(2) RRU RF jumper	(3) RRU power cable
(4) CPRI fiber optic cable	-	-

9.3 Installation Process

This section describes the process of installing RRU cables.

Figure 9-9 shows the process of installing RRU cables.

Copyright © Huawei Technologies Co., Ltd.

Figure 9-9 Process of installing RRU cables

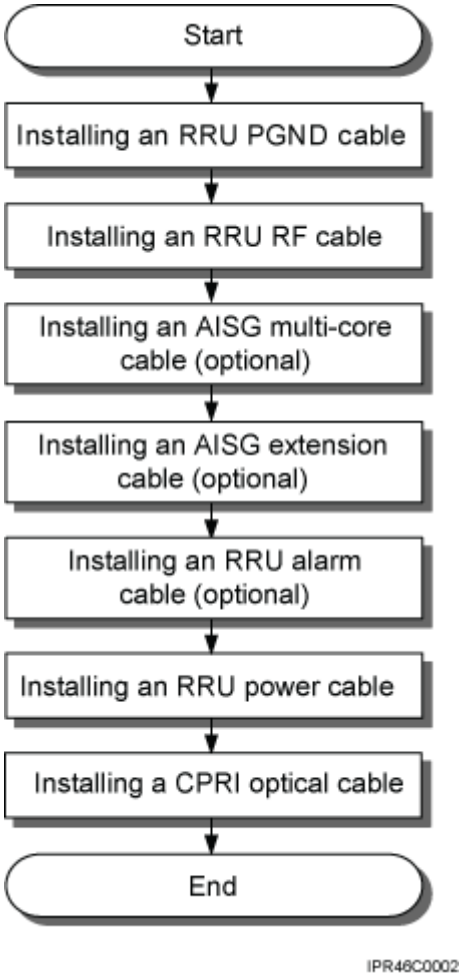

9.4 RRU Cable List

This section describes RRU cable connections.

Table 9-1 lists RRU cables.

Table 9-1 RRU cables

Cable	One End		The Other End	
	Connector	Installation Position	Connector	Installation Position
RRU PGND Cable	OT terminal (16 mm^2 or 0.025 in. ^{2}, M6)	Ground terminal on the RRU	OT terminal (16 mm^2 or 0.025 in. ^{2}, M8)	Ground terminal on the ground bar

Copyright © Huawei Technologies Co., Ltd.

Cable	One End		The Other End	
	Connector	Installation Position	Connector	Installation Position
RRU Power Cable	Tool-less female connector (pressfit type)	NEG(-) and RTN(+) ports on the RRU	Tool-less female connector (pressfit type)	One of RRU0 to RRU5 ports on the EPU or EPS One of LOAD0 to LOAD5 ports on the DCDU-11B
			OT terminal (3.3 mm^2 or 0.005 in.^{2}, M4), complying with North American standards OT terminal (4 mm^2 or 0.006 in.^{2}, M4), complying with European standards	One of LOAD0 to LOAD5 ports on the DCDU-03B
RRU Alarm Cable	DB15 waterproof male connector	EXT_ALM port on the RRU	Cord end terminal	External alarm device
CPRI Fiber Optic Cable	DLC connector	CPRI0 port on the RRU	DLC connector	CPRI port on the WBBP in the BBU
		CPRI1 port on the RRU		CPRI0 port on the RRU
RRU RF Jumper	DIN male connector	ANT_TX/RXA or ANT_TX/RXB port on the RRU	DIN male connector	Antenna system
RRU AISG Multi-Wire Cable	DB9 waterproofed male connector	RET port on the RRU	Standard AISG female connector	Standard AISG male connector on the RCU or on the AISG extension cable
RRU AISG Extension Cable	Standard AISG male connector	Standard AISG female connector on the AISG multi-wire cable	Standard AISG female connector	Standard AISG male connector on the RCU

Copyright © Huawei Technologies Co., Ltd.

9.5 Installing an RRU PGND Cable

This section describes the procedure for installing an RRU PGND cable.

Context

The cross-sectional area of an RRU PGND cable is 16 mm^2 (0.025 $in.^2$). The cable has an M6 OT terminal at one end and an M8 terminal at the other end.

Procedure

Step 1 According to the actual cable route, cut the PGND cable into a proper length to prepare an RRU PGND cable. Then add an OT terminal at each end of the cable according to the instructions in Assembling the OT Terminal and the Power Cable.

Step 2 Install the RRU PGND cable.

Connect the M6 OT terminal at one end of the PGND cable to the ground terminal at the RRU bottom and the M8 OT terminal at the other end to the external ground bar, as shown in **Figure 9-10**.

Figure 9-10 Installing an RRU PGND cable

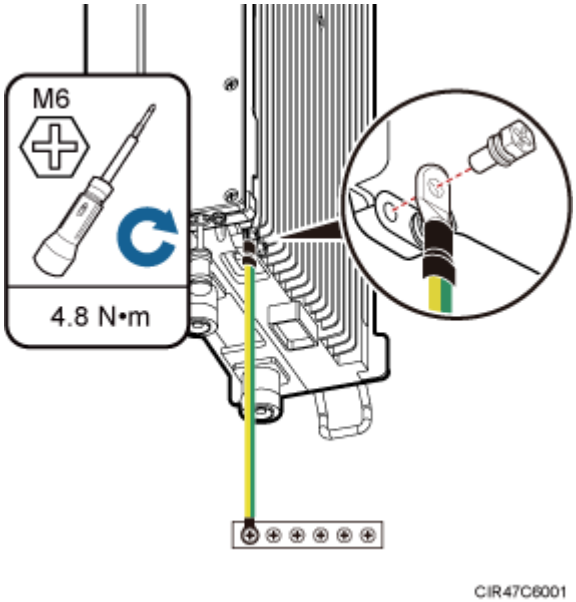

NOTE

Crimp OT terminals in correct positions, as shown in **Figure 9-11**.

Copyright © Huawei Technologies Co., Ltd.

Figure 9-11 Correct position of an OT terminal

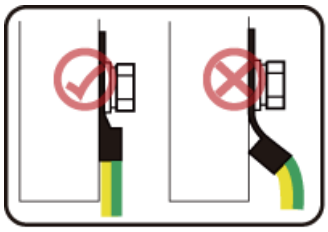

Step 3 Label the installed cables according to the instructions in Attaching a Cable-Tying Label.

----End

9.6 Installing an RRU RF Jumper

This section describes the procedure for installing an RRU RF jumper.

Procedure

Step 1 Connect the DIN male connector at one end of the RRU RF jumper to the ANT port on the RRU, and use a torque wrench to tighten the connector to 25 N·m (221.27 lbf·in.), as shown in **Figure 9-12**.

Figure 9-12 Installing an RRU RF jumper

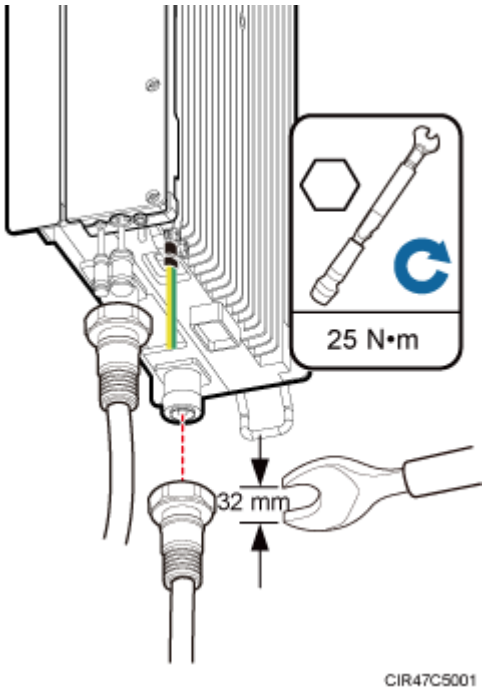

Copyright © Huawei Technologies Co., Ltd.

CAUTION

On AC-powered electric railways, such as high speed railways, when leaky cables are connected to RRUs installed in tunnels, high-voltage-resistance DC blocks must be installed between RRU RF jumpers and the leaky cables to protect the RRUs against damage.

Step 2 Link the other end of the RF jumper to the external antenna system.

Step 3 Waterproof the connectors of the RF jumper by referring to **Figure 9-13**.

Figure 9-13 Waterproofing a connector of the RF jumper

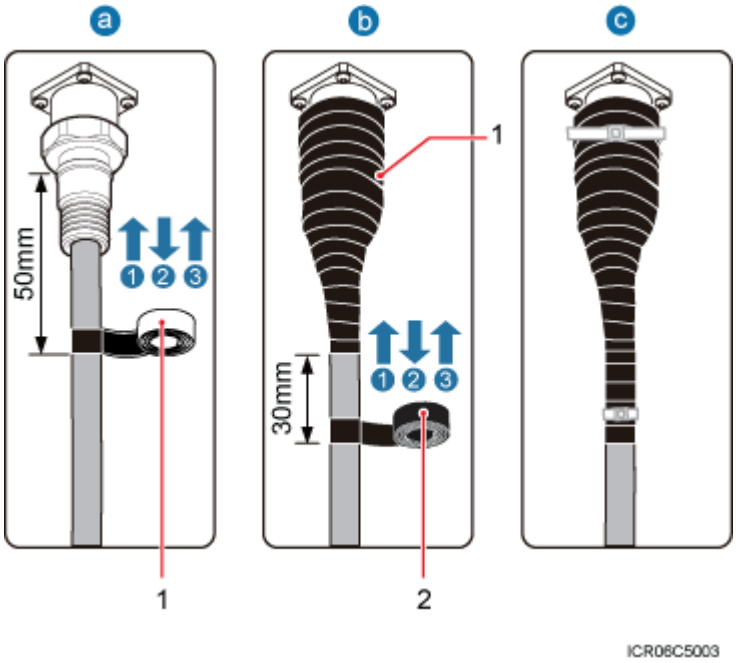

(1) Waterproof tape	(2) PVC insulation tape

NOTE

- Before wrapping waterproof tape, stretch the tape evenly until the length of the tape becomes twice its original length.
- Do not stretch the PVC insulation tape when wrapping the PVC insulation tape.
- Wrap each layer of tape around the connector tightly and neatly, and ensure that each layer of tape overlaps more than 50% of the preceding layer. Ensure that neighboring layers are stuck to each other.
- Ensure that the adhesive surface of the tape overlaps the lower layer.
- When cutting off the cable ties, reserve a redundant length of 3 mm (0.12 in.) to 5 mm (0.2 in.).

1. Wrap three layers of waterproof tape on the connector, first from bottom up, then from top down, and finally from bottom up. Start wrapping the connector at a position 50 mm (1.97 in.) away below the bottom of the connector to the top of the connector, first from bottom

Copyright © Huawei Technologies Co., Ltd.

up, then from top down, and finally from bottom up. Cut off the redundant tape after three layers are wrapped. Wrap each layer of tape around the connector tightly.

2. Wrap three layers of PVC insulation tape. Start the wrapping at a position 30 mm (1.18 in.) away below the bottom of the waterproof tape to the top of the connector, first from bottom up, then from top down, and finally from bottom up. Cut off the redundant tape after three layers are wrapped. Wrap each layer of tape around the connector tightly.
3. Start binding cable ties to the cable at a position 3 mm (0.12 in.) to 5 mm (0.2 in.) away from one end of the PVC insulation tape.

Step 4 Check the dustproof caps on antenna connectors. In outdoor scenarios, dustproof caps must be waterproofed, as shown in **Figure 9-14**.

CAUTION

Do not remove dustproof caps from vacant antenna connectors.

Figure 9-14 Waterproofing a dustproof cap

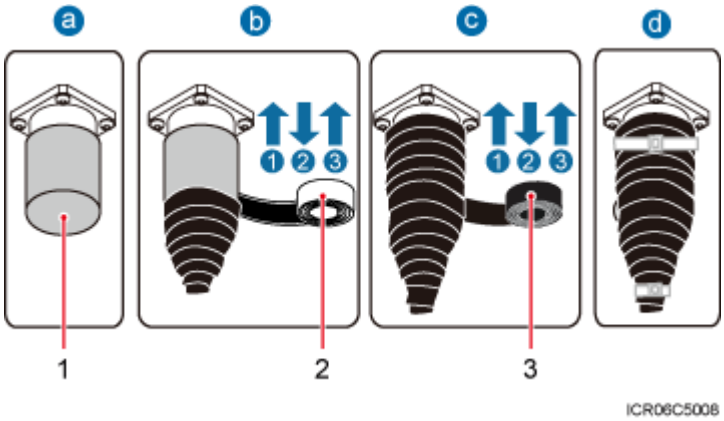

(1) Dustproof cap (2) Waterproof tape (3) PVC insulation tape

NOTE

- Before wrapping waterproof tape, stretch the tape evenly until the length of the tape becomes twice its original length.
- Do not stretch the PVC insulation tape when wrapping the PVC insulation tape.
- Wrap each layer of tape around the connector tightly and neatly, and ensure that each layer of tape overlaps more than 50% of the preceding layer. Ensure that neighboring layers are stuck to each other.
- Ensure that the adhesive surface of the tape overlaps the lower layer.
- When cutting off the cable ties, reserve a redundant length of 3 mm (0.12 in.) to 5 mm (0.2 in.).

1. Verify that dustproof caps are not removed.
2. Wrap three layers of waterproof tape on the connector, first from bottom up, then from top down, and finally from bottom up. Wrap each connector with three layers of waterproof tape, from bottom up, then from top down, and finally from bottom up. Do not cut the tape until all the three layers of the tape are already wrapped. Cut off the redundant tape after three layers are wrapped. Wrap each layer of tape around the connector tightly.

Copyright © Huawei Technologies Co., Ltd.

3. Wrap three layers of PVC insulation tape. Wrap each connector with three layers of waterproof tape, from bottom up, then from top down, and finally from bottom up. Do not cut the tape until all the three layers of the tape are already wrapped. Cut off the redundant tape after three layers are wrapped. Wrap each layer of tape around the connector tightly.
4. Start binding cable ties to the cable at a position 3 mm (0.12 in.) to 5 mm (0.2 in.) away from one end of the PVC insulation tape.

Step 5 Route the cables according to the instructions in **9.1 Cabling Requirements**, and then use cable ties to bind the cables.

Step 6 Label the installed cables according to the instructions in Attaching a Sign Plate Label.

Step 7 Attach color-coding to the installed RF jumper according to the instructions in Attaching the Color Ring.

----End

9.7 Installing an RRU AISG Multi-Wire Cable and AISG Extension Cable

This section describes the procedures for installing an RRU AISG multi-wire cable and AISG extension cable.

Context

When the distance between an RRU and a Remote Control Unit (RCU) is longer than 5 m (16.4 ft.), an AISG multi-wire cable is not long enough to connect the RRU and the RCU. In this case, an AISG extension cable is used to extend the AISG multi-wire cable.

Procedure

- Install an AISG multi-wire cable that is not configured with an AISG extension cable.
  1. Use an M3 flat-head screwdriver to loosen the screws on the dustproof cap on the RET port and remove the dustproof cap.
  2. Link the waterproofed DB9 connector at one end the AISG multi-wire cable to the RET port on the RRU bottom, as shown in **Figure 9-15**.

Copyright © Huawei Technologies Co., Ltd.

Figure 9-15 Installing an RRU AISG multi-wire cable

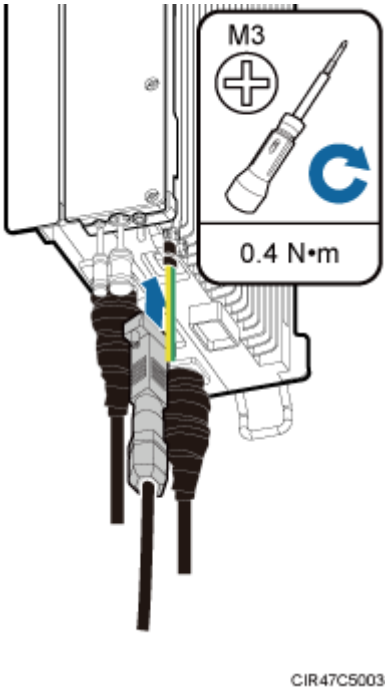

3. Use an M3 Phillips screwdriver to tighten the posts on both sides of the waterproof DB9 connector to 0.4 N·m (3.54 lbf·in.).
4. Connect the other end of the cable to the standard AISG male connector on the RCU.
5. Route the cables according to the instructions in **9.1 Cabling Requirements**, and then use cable ties to bind the cables.
6. Label the installed cables according to the instructions in Attaching an L-Shaped Label.

- Install an AISG multi-wire cable that is configured with an AISG extension cable.
  1. Use an M3 flat-head screwdriver to loosen the screws on the dustproof cap on the RET port and remove the dustproof cap.
  2. Link the waterproofed DB9 connector at one end of the AISG multi-wire cable to the RET port on the RRU bottom, and link the other end to the standard AISG male connector of the AISG extension cable, as shown in **Figure 9-16**.

Copyright © Huawei Technologies Co., Ltd.

Figure 9-16 Installing an RRU AISG multi-wire cable

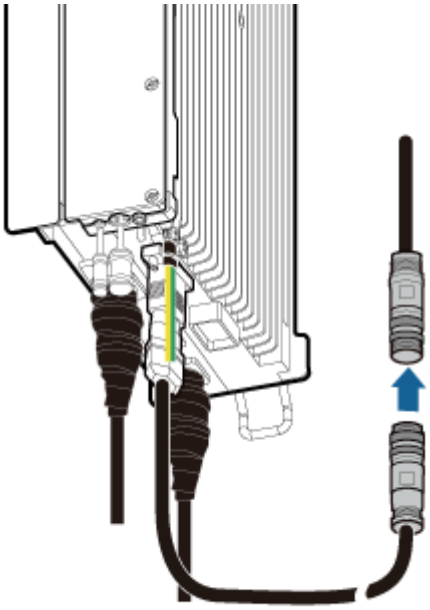

3. Use an M3 Phillips screwdriver to tighten the posts on both sides of the waterproof DB9 connector to 0.4 N·m (3.54 lbf·in.).
4. Connect the other end of the AISG extension cable to the standard AISG male connector on the RCU, as shown in **Figure 9-17**.

Figure 9-17 Installing an RRU AISG extension cable

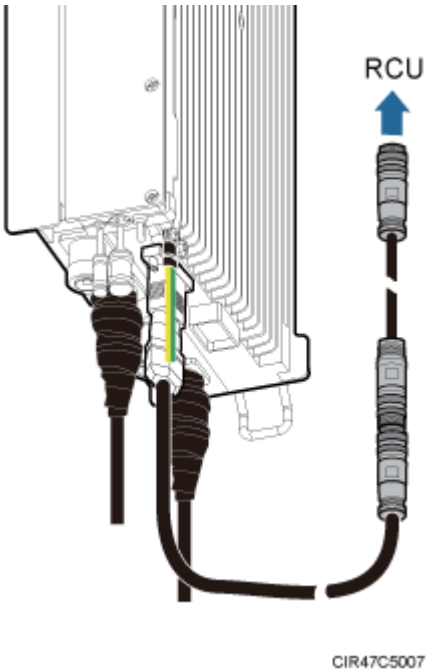

Copyright © Huawei Technologies Co., Ltd.

5. Route the cables according to the instructions in **9.1 Cabling Requirements**, and then use cable ties to bind the cables.
6. Label the installed cables according to the instructions in Attaching an L-Shaped Label.

----End

9.8 Installing an RRU Alarm Cable

This section describes the procedure for installing an RRU alarm cable.

Procedure

Step 1 Use an M3 Phillips screwdriver to loosen the screws on the dustproof cap on the EXT_ALM port and remove the dustproof cap.

Step 2 Connect the waterproof DB15 connector at one end of the RRU alarm cable to the EXT_ALM port on the RRU, and connect the eight cord end terminals at the other end to external alarm devices, as shown in **Figure 9-18**.

Figure 9-18 Installing an RRU alarm cable

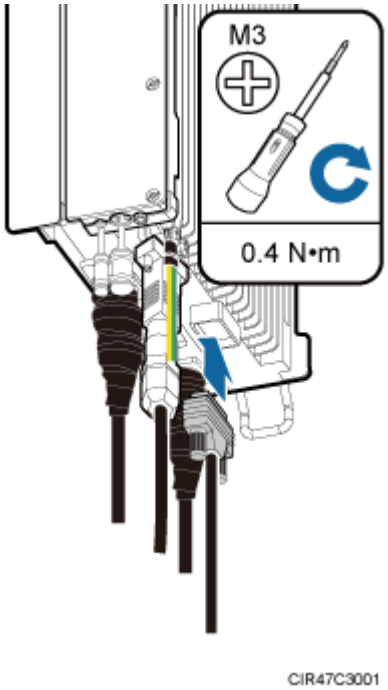

Step 3 Use an M3 Phillips screwdriver to tighten the posts on both sides of the waterproof DB15 male connector to 0.4 N·m (3.54 lbf·in.).

Step 4 Route the cables according to the instructions in **9.1 Cabling Requirements**, and then use cable ties to bind the cables.

Copyright © Huawei Technologies Co., Ltd.

Step 5 Label the installed cables according to the instructions in Attaching an L-Shaped Label.

----End

9.9 Opening the Cover Plate of an RRU Cabling Cavity

This section describes the procedure for opening the cover plate of an RRU cabling cavity.

Procedure

Step 1 Wear ESD gloves.

CAUTION

Take proper ESD protection measures, for example, wear ESD gloves, to prevent electrostatic damage to the boards, modules, or electronic components.

Step 2 Use an M5 Phillips screwdriver to loosen the three screws on the cover plate of the RRU cabling cavity, and open the cover plate, as shown in **Figure 9-19**.

Figure 9-19 Opening the cover plate of the RRU cabling cavity

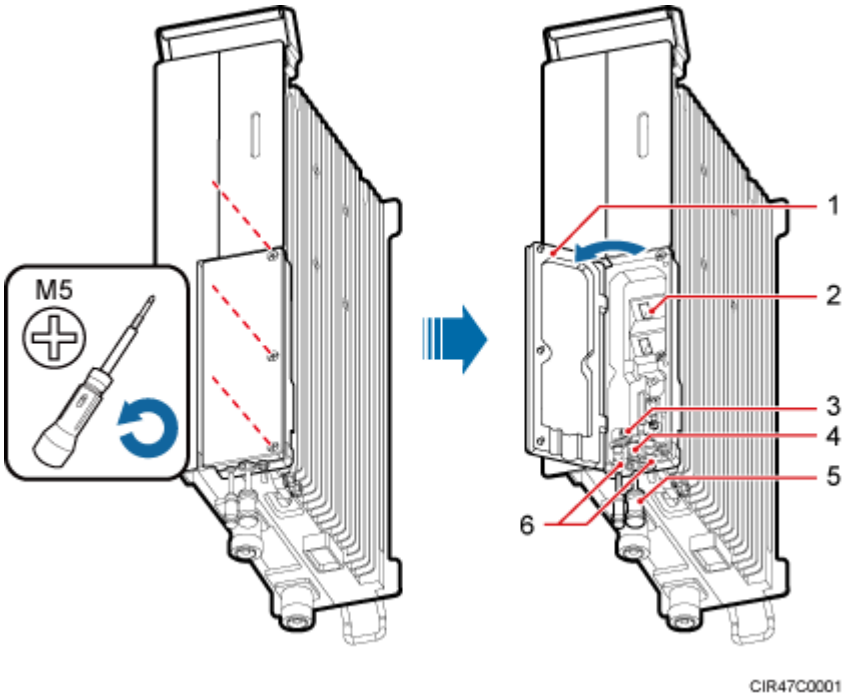

(1) Cover plate (2) Cabling cavity (3) Clip

(4) Cable trough for the power cable (5) Waterproof block (6) Cable trough for the fiber optic cable

Step 3 Loosen the screws on the clip, and open the clip, as shown **Figure 9-20**.

Copyright © Huawei Technologies Co., Ltd.

NOTE

Open the clip only for the associated cable.

Figure 9-20 Opening clips

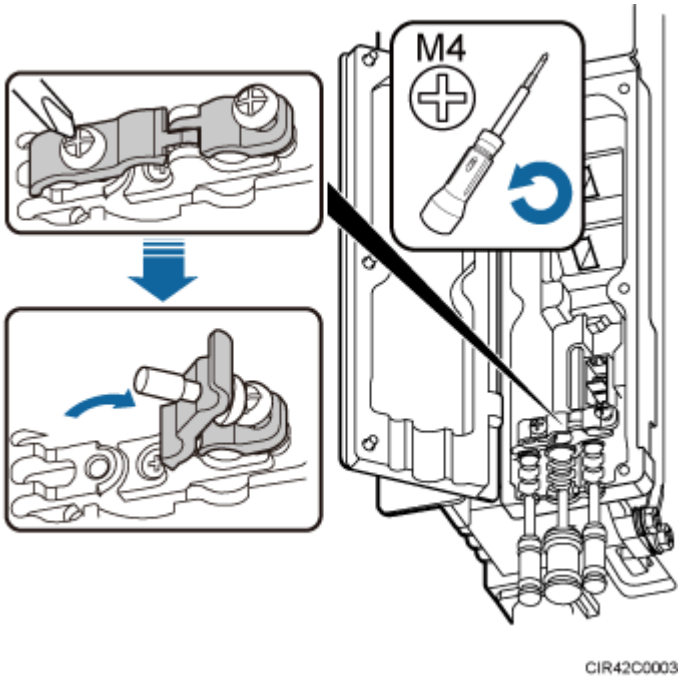

Step 4 Remove the waterproof block.

NOTE

Remove only the waterproof blocks for the cables to be installed.

----End

9.10 Installing an RRU Power Cable

This section describes the procedure for installing an RRU power cable.

Prerequisites

- An easy power receptacle (pressfit type) connector is added to the RRU power cable on the RRU side. For details, see **12.1 Adding a Tool-Less Female Connector (Pressfit Type) to the RRU Power Cable on the RRU Side**.
- Add a connector or OT terminals to the RRU power cable on the power device side. For details, see the *DBS3900 Installation Guide*.

Context

There are two types of RRU power cables in terms of cross-sectional areas: 3.3 mm^2 (0.005 $in.^2$) (12 AWG) complying with North American standards and 4 mm^2 (0.006 $in.^2$) complying with European standards.

Copyright © Huawei Technologies Co., Ltd.

Table 9-2 describes the power cable connections.

Table 9-2 Power cable connections

Cable	Power Device	One End		The Other End		Remarks
		Connector	Installation Position	Connector	Installation Position	
RRU power cable	DCDU-11B	Tool-less female connector (pressfit type)	Power port on an RRU	Tool-less female connector (pressfit type)	One of the LOAD0 to LOAD5 ports on the DCDU-11B	Black
	EPU				One of the RRU0 to RRU5 ports on the EPU	

WARNING

When installing the RRU power cable, connect the RRU power cable first to the RRU and then to the power device. Operations in the reverse sequence may cause damage to the components and injury of human bodies.

Procedure

Step 1 Connect the tool-less female connector (pressfit type) at one end of the RRU power cable to the power supply socket on the RRU, as shown in Figure 9-21.

Copyright © Huawei Technologies Co., Ltd.

Figure 9-21 Installing an RRU power cable

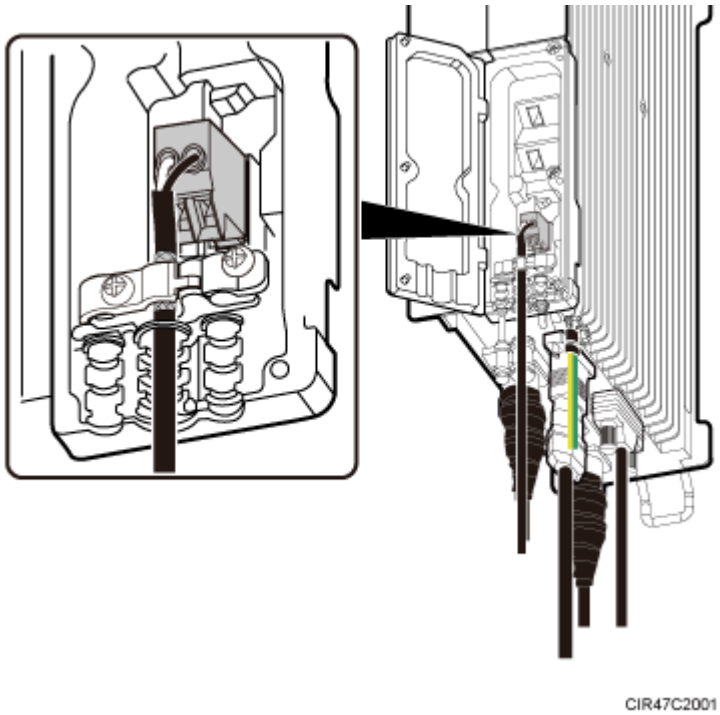

CAUTION

Ensure that the exposed shield layer of the power cable is properly tightened using the clip.

Step 2 Connect the tool-less female connector (pressfit type) at the other end of the RRU power cable to the corresponding position on the power device.

NOTE

- A DCDU-11B can supply power to a maximum of six RRUs. The RRU power cables are connected to the LOAD0 to LOAD5 terminals on the DCDU-11B.
- An EPU can supply power to a maximum of six RRUs. The RRU power cables are connected to the RRU0 to RRU5 ports on the EPU.
- When the RRU power cable is connected to the EPU, the blue core wire in the tool-less female connector (pressfit type) is connected to the left part of a port on the EPU, and the black/brown core wire is connected to the right part of the port on the EPU.

Step 3 Route the cables according to the instructions in **9.1 Cabling Requirements**, and then use cable ties to bind the cables.

Step 4 Label the installed cables according to the instructions in Attaching a Cable-Tying Label.

----End

9.11 Installing a CPRI Fiber Optic Cable

This section describes the procedure for installing a CPRI fiber optic cable.

Copyright © Huawei Technologies Co., Ltd.

Prerequisites

Before the installation, single-mode optical modules can be distinguished from multi-mode optical modules in either of the following ways:

- SM and MM labels on an optical module: SM indicates a single-mode optical module, and MM indicates a multi-mode optical module.
- Color of the puller on an optical module: Blue indicates a single-mode optical module, and black or gray indicates a multi-mode optical module.

CAUTION

The optical modules to be installed must match CPRI rates.

Context

- A CPRI fiber optic cable transmits CPRI signals between a BBU and an RRU.
- For details about CPRI fiber optic cable connections, see section "CPRI Cable Connections" in the *BBU3900 Hardware Description* or *DBS3900 Hardware Description*.

Procedure

Step 1 Lower the pullers of two optical modules, insert one optical module into the CPRI0 port on the RRU and the other optical module into the CPRI port on the BBU, and raise the pullers, as shown in **Figure 9-22**.

Figure 9-22 Installing an optical module

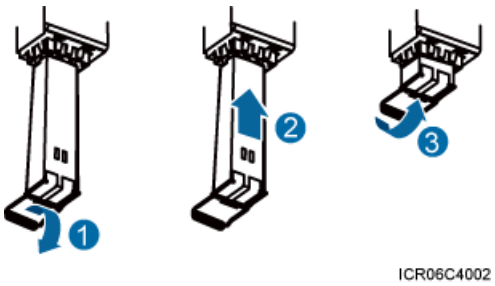

CAUTION

The performance of an optical module that is exposed to the air for more than 20 minutes may be abnormal. Therefore, you must insert an fiber optic cable into an unpacked optical module within 20 minutes.

Step 2 Connect the end labeled 1A and 1B of the fiber optic cable to the optical module on the RRU side, as shown in **Figure 9-23**.

Copyright © Huawei Technologies Co., Ltd.

Figure 9-23 Installing a CPRI fiber optic cable

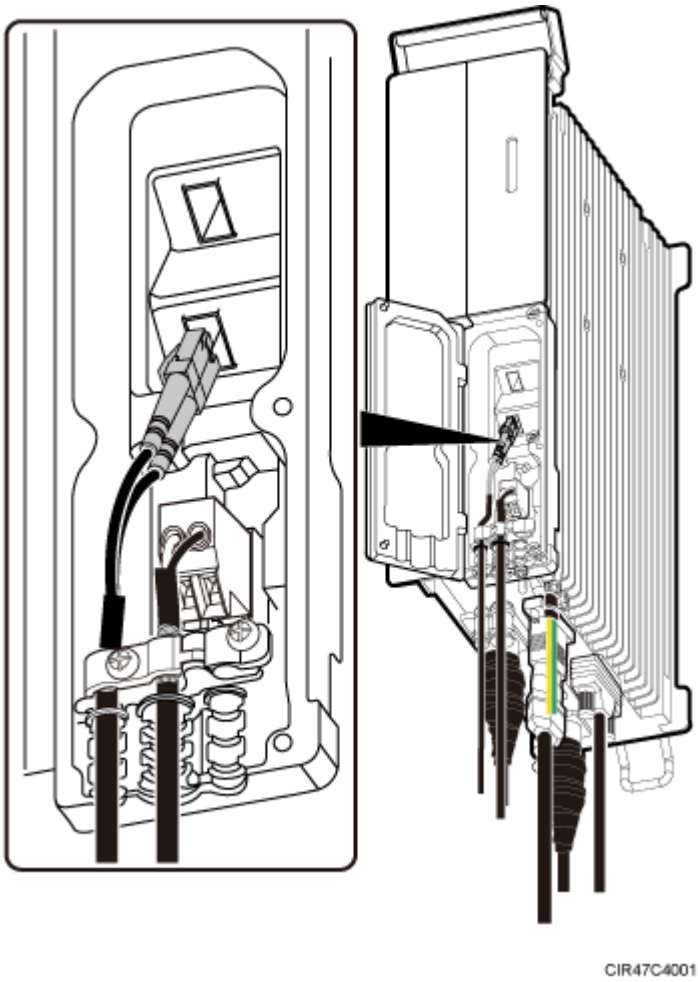

CAUTION

- To avoid any damage to fiber optic cables, the cables connected to the RRU must be installed according to the installation process. For details about the installation process, see **9.3 Installation Process**.

Step 3 Connect the end labeled 2A and 2B of the fiber optic cable to the optical module on the BBU side.

Step 4 Route the cables according to the instructions in **9.1 Cabling Requirements**, and then use cable ties to bind the cables.

Step 5 Label the installed cables according to the instructions in Attaching an L-Shaped Label.

----End

9.12 Closing the Cover Plate of an RRU Cabling Cavity

This section describes the procedure for closing the cover plate of an RRU cabling cavity.

Copyright © Huawei Technologies Co., Ltd.

Procedure

Step 1 Close the clips for the installed cables. Use a torque screwdriver to tighten the screws on each clip to 1.4 N·m (12.39 lbf·in.), as shown in **Figure 9-24**.

CAUTION

Ensure that the exposed shield layer of the power cable is properly tightened using the clip.

Figure 9-24 Closing clips

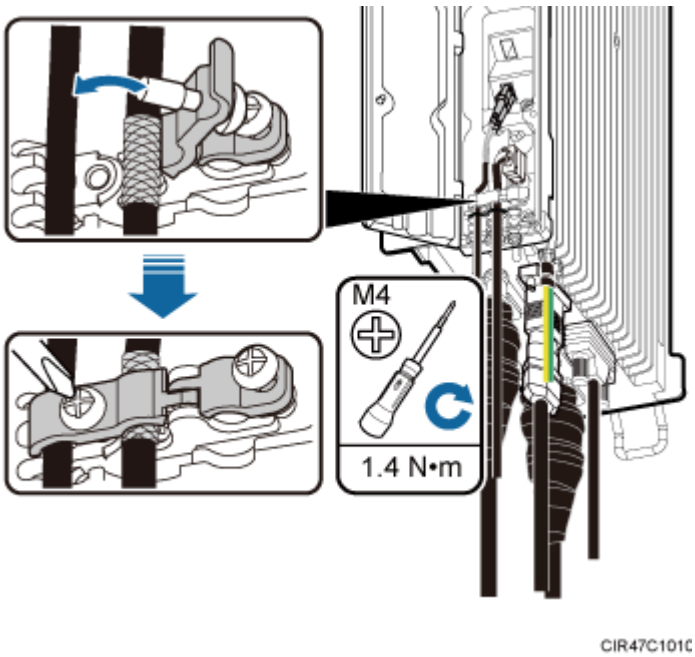

Step 2 Insert waterproof blocks into vacant cable troughs in the cabling cavity, as shown in **Figure 9-25**.

CAUTION

Ensure that cables and waterproof blocks are properly inserted into troughs.

Copyright © Huawei Technologies Co., Ltd.

Figure 9-25 Correct placement of waterproof blocks

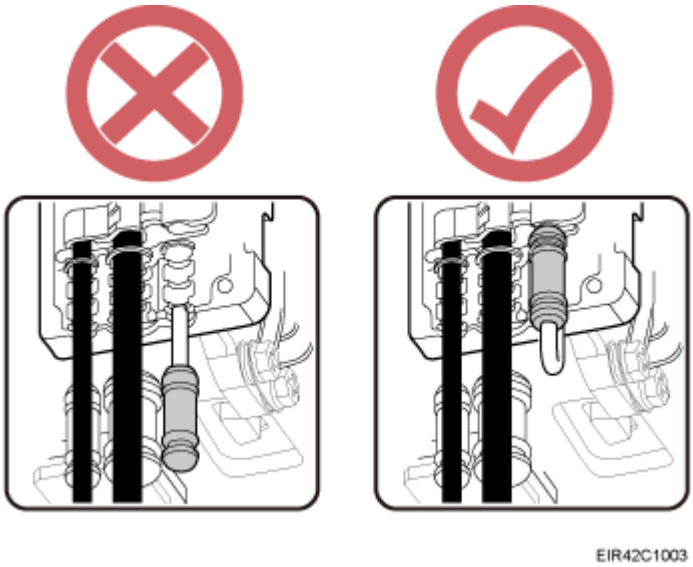

Step 3 Close the cover plate of the RRU cabling cavity. Use an M5 torque screwdriver to partially tighten the screws on the cover plate in the sequence shown in **Figure 9-26**. Then tighten the screws to 2 N·m (17.7 lbf·in.) in the same sequence.

Figure 9-26 Closing the cover plate of an RRU cabling cavity

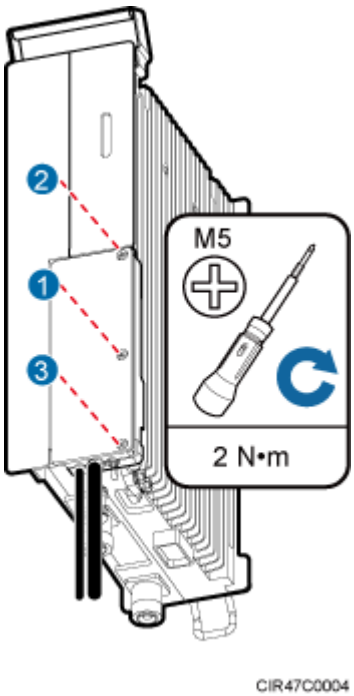

Copyright © Huawei Technologies Co., Ltd.

Step 4 Take off the ESD gloves, and pack up all the tools.

----End

Copyright © Huawei Technologies Co., Ltd.

10 Checking the RRU Hardware Installation

After an RRU is installed, check the hardware installation.

Table 10-1 provides the checklist for the RRU hardware installation.

Table 10-1 Checklist for the RRU hardware installation

SN	Item
1	The position for each device conforms to the engineering drawing and meets the space requirement. Sufficient space is reserved for equipment maintenance.
2	The RRU is securely installed.
3	The cover plate is securely installed on the RRU cabling cavity.
4	Waterproof blocks are securely installed in vacant cable troughs of the RRU cabling cavity, and the cover plate for the cabling cavity is securely installed. In addition, vacant RF ports are covered with dustproof caps and the caps are tightened.
5	There are no connectors or joints on each power cable or PGND cable.
6	The terminals at two ends of each power cable or PGND cable are securely soldered or crimped.
7	None of power cables and PGND cables can be short-circuited or reversely connected. In addition, these cables are not damaged or broken.
8	Power cables and PGND cables are separately bound from other cables.
9	The protection grounding of the RRU and the surge protection grounding of the building share one group of ground conductors.
10	The connectors of each signal cable are intact and securely linked, and these cables are not damaged or broken.
11	Labels are correct, legible, and complete at both ends of each cable, feeder, and jumper.

Copyright © Huawei Technologies Co., Ltd.

11 Powering On an RRU

After all the devices are installed, check the power-on status of an RRU.

CAUTION

After you unpack an RRU, you must power on it within 24 hours. If you power off the RRU for maintenance, you must restore power to the RRU within 24 hours.

Figure 11-1 shows the RRU power-on check process.

NOTE

For details about how to power on an RRU, see Powering On an RRU. For details about how to power off an RRU, see section "Powering-Off the RRU" in *RRU Maintenance Guide*.

Copyright © Huawei Technologies Co., Ltd.

Figure 11-1 RRU power-on check process

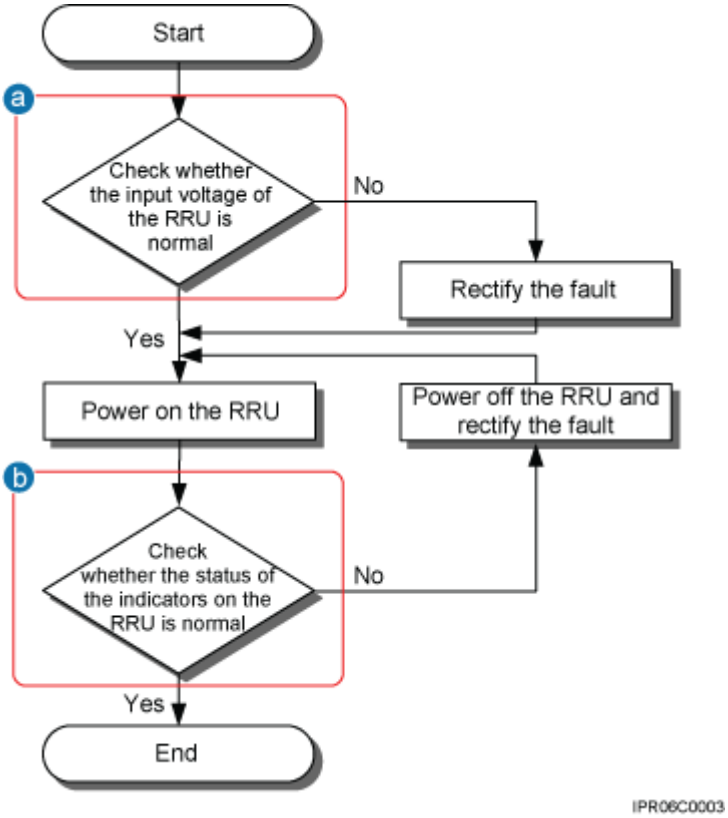

(a) The normal input voltage of an RRU is -48 V DC. The voltage of the external power supply should range from -36 V DC to -57 V DC.

(b) The RUN indicator on the RRU is on for 1s and off for 1s. The ALM indicator is steady off.

Copyright © Huawei Technologies Co., Ltd.

12 Appendix

About This Chapter

This section describes the procedure for adding an easy power receptacle (pressfit type) connector.

12.1 Adding a Tool-Less Female Connector (Pressfit Type) to the RRU Power Cable on the RRU Side
This section describes the procedure for adding a tool-less female connector (pressfit type) to the RRU power cable on the RRU side.

Copyright © Huawei Technologies Co., Ltd.

12.1 Adding a Tool-Less Female Connector (Pressfit Type) to the RRU Power Cable on the RRU Side

This section describes the procedure for adding a tool-less female connector (pressfit type) to the RRU power cable on the RRU side.

Context

Figure 12-1 shows the cable diagram on labels.

Figure 12-1 Cable diagram on labels

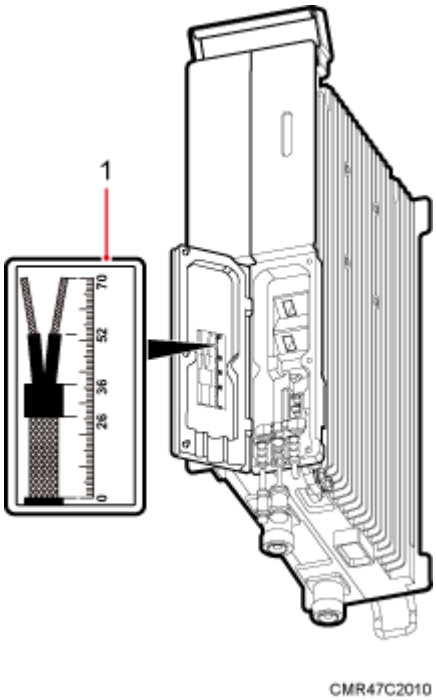

(1) Cable diagram on labels

Procedure

Step 1 Determine the length of the power cable for different operations based on the labels, as shown in Figure 12-2.

Figure 12-2 Determining the length of the power cable

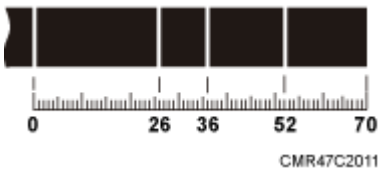

Copyright © Huawei Technologies Co., Ltd.

Step 2 Strip the specified length of the sheath off the power cable, as shown in **Figure 12-3**.

Figure 12-3 Stripping the specified length of sheath

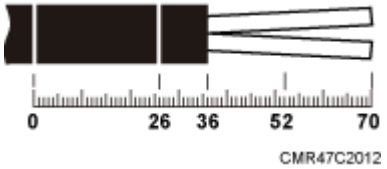

Step 3 Strip a specified length of sheath off each core wire. The length must be consistent with the length of the notch in the tool-less female connector (pressfit type), as shown in **Figure 12-4**.

Figure 12-4 Stripping the sheath off each core wire

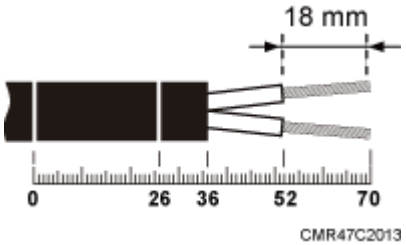

Figure 12-5 Matched length

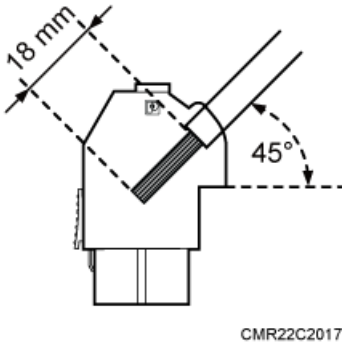

Step 4 Add a tool-less female connector (pressfit type) to two core wires.

1. Tighten the screws using a Phillips screwdriver, as shown in **Figure 12-6**.

Copyright © Huawei Technologies Co., Ltd.

Figure 12-6 Tightening screws

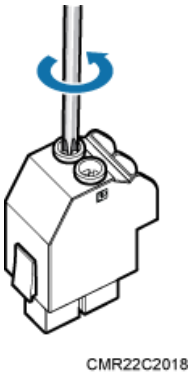

2. Connect the blue core wire labeled NEG(-) to the - port and the black/brown core wire labeled RTN(+) to the + port on the tool-less female connector (pressfit type), and then tighten the screws using a Phillips screwdriver, as shown in **Figure 12-7**.

Figure 12-7 Adding a tool-less female connector (pressfit type) to two core wires

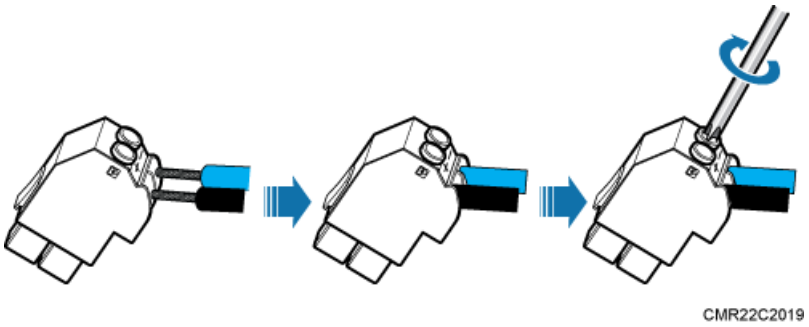

Step 5 Strip the specified length of the sheath off the power cable to expose the intact shield layer, as shown in **Figure 12-8**.

Figure 12-8 Stripping the sheath off the power cable

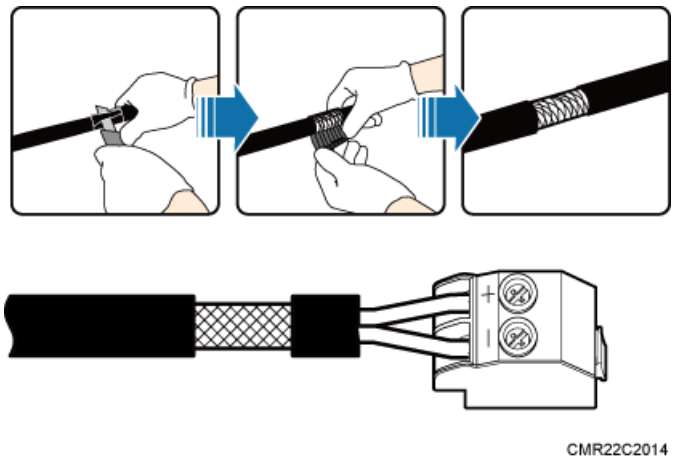

Copyright © Huawei Technologies Co., Ltd.

CAUTION

Each core wire is exposed outside the tool-less female connector (pressfit type) for 1.5 mm (0.059 [in.]), as shown in **Figure 12-9**.

Figure 12-9 Inserting core wires into the tool-less female connector (pressfit type)

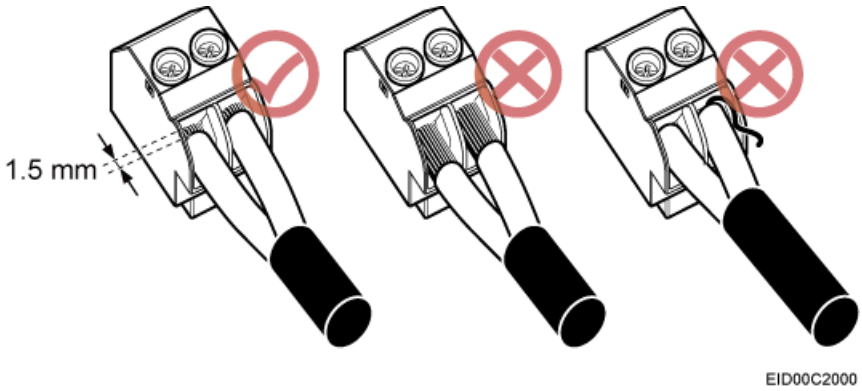

----End

Copyright © Huawei Technologies Co., Ltd.