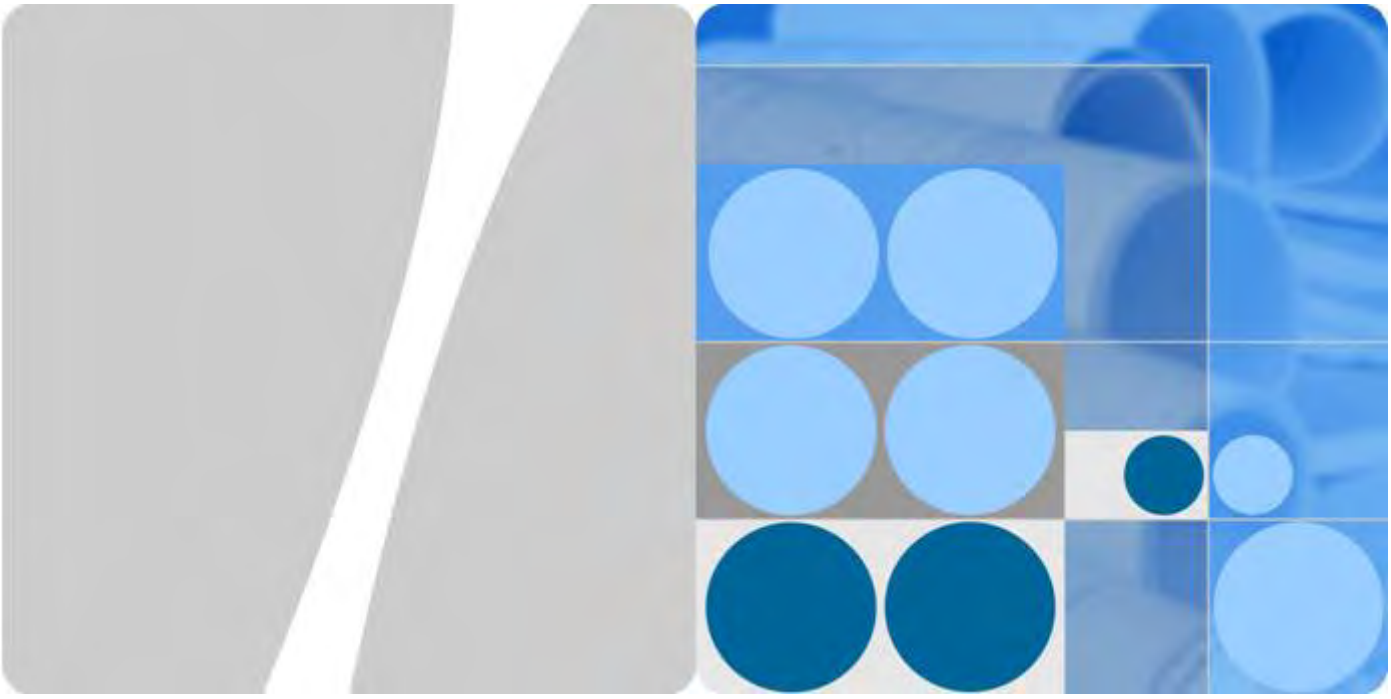

DBS3900(ICR)

Installation Guide

Issue 01

Date 2011-03-30

HUAWEI TECHNOLOGIES CO., LTD.

Copyright © Huawei Technologies Co., Ltd. 2011. All rights reserved.

No part of this document may be reproduced or transmitted in any form or by any means without prior written consent of Huawei Technologies Co., Ltd.

Trademarks and Permissions

HUAWEI and other Huawei trademarks are trademarks of Huawei Technologies Co., Ltd.
All other trademarks and trade names mentioned in this document are the property of their respective holders.

Notice

The purchased products, services and features are stipulated by the contract made between Huawei and the customer. All or part of the products, services and features described in this document may not be within the purchase scope or the usage scope. Unless otherwise specified in the contract, all statements, information, and recommendations in this document are provided "AS IS" without warranties, guarantees or representations of any kind, either express or implied.

The information in this document is subject to change without notice. Every effort has been made in the preparation of this document to ensure accuracy of the contents, but all statements, information, and recommendations in this document do not constitute the warranty of any kind, express or implied.

Huawei Technologies Co., Ltd.

Address: Huawei Industrial Base
Bantian, Longgang
Shenzhen 518129
People's Republic of China

Website: http://www.huawei.com

Email: support@huawei.com

About This Document

Purpose

This document describes the procedures for installing the DBS3900 devices on the Indoor Centralized Rack (ICR).

Product Version

The following table lists the product versions related to this document.

Product Name	Product Version
DBS3900	V100R004
DBS3900 WCDMA	V200R013
DBS3900 LTE	V100R003C00
DBS3900 GSM	V100R013

Intended Audience

This document is intended for:

- Base station installation engineers

Organization

1 Changes in the DBS3900 (ICR) Installation Guide

2 Installation Preparations

This chapter describes the tools and instruments required for installation and the skills and prerequisites required for onsite installation engineers.

Copyright © Huawei Technologies Co., Ltd.

3 Information About the Installation

This chapter describes the information about the installation, including exterior, installation scenario, and space requirements

4 Unpacking the Equipment

Unpack and check the delivered equipment to ensure that all the materials are included and intact.

5 Obtaining the ESN

The Electronic Serial Number (ESN) is a unique identifier of a Network Element (NE). Record the ESN for later commissioning of the base station before installation.

6 Installation Process

This section describes the process of installing the DBS39000 on the ICR.

7 Assembling the IFS06

This chapter describes the procedure for assembling the IFS06.

8 Installing the IFS06

This chapter describes the procedure for installing the IFS06 on the concrete floor and ESD floor.

9 Installing the Main Bracket for the RRU

This chapter describes the procedure for installing the main bracket for the DC RRU and AC RRU.

10 Installing the GPS Surge Protector

This chapter describes the procedure for installing the GPS surge protector.

11 Installing the IMB03

This chapter describes the procedure for installing the IMB03.

12 Installing the Equipotential Cable and PGND Cable

This chapter describes the procedures for installing the equipotential cable and PGND cable.

13 Installing Devices in the IMB03

This chapter describes the installation of the devices in the IMB03.

14 Installing the RRU

This section describes the procedure for installing the AC RRU and DC RRU.

15 Installing Cables

This chapter describes the procedure for installing all the cables.

16 Checklist for the DBS3900 Hardware Installation

This section describes the checklist for the DBS3900 hardware installation.

17 Performing the DBS3900 Power-On Check

After all devices are installed, you need to check the power-on status of the BBU and RRU.

18 Installing the Cover Plate for the IMB03

Copyright © Huawei Technologies Co., Ltd.

This section describes the procedure for installing the cover plate for the IMB03.

Conventions

Symbol Conventions

The symbols that may be found in this document are defined as follows.

Symbol	Description
DANGER	Indicates a hazard with a high level of risk, which if not avoided, will result in death or serious injury.
WARNING	Indicates a hazard with a medium or low level of risk, which if not avoided, could result in minor or moderate injury.
CAUTION	Indicates a potentially hazardous situation, which if not avoided, could result in equipment damage, data loss, performance degradation, or unexpected results.
TIP	Indicates a tip that may help you solve a problem or save time.
NOTE	Provides additional information to emphasize or supplement important points of the main text.

General Conventions

The general conventions that may be found in this document are defined as follows.

Convention	Description
Times New Roman	Normal paragraphs are in Times New Roman.
Boldface	Names of files, directories, folders, and users are in **boldface**. For example, log in as user **root**.
Italic	Book titles are in *italics*.
`Courier New`	Examples of information displayed on the screen are in Courier New.

Command Conventions

The command conventions that may be found in this document are defined as follows.

Convention	Description
Boldface	The keywords of a command line are in **boldface**.
Italic	Command arguments are in *italics*.

Copyright © Huawei Technologies Co., Ltd.

Convention	Description
[ ]	Items (keywords or arguments) in brackets [ ] are optional.
{ x | y | ... }	Optional items are grouped in braces and separated by vertical bars. One item is selected.
[x | y | ...]	Optional items are grouped in brackets and separated by vertical bars. One item is selected or no item is selected.
{ x | y | ... }*	Optional items are grouped in braces and separated by vertical bars. A minimum of one item or a maximum of all items can be selected.
[x | y | ...]*	Optional items are grouped in brackets and separated by vertical bars. Several items or no item can be selected.

GUI Conventions

The GUI conventions that may be found in this document are defined as follows.

Convention	Description
Boldface	Buttons, menus, parameters, tabs, window, and dialog titles are in **boldface**. For example, click **OK**.
>	Multi-level menus are in **boldface** and separated by the ">" signs. For example, choose **File** > **Create** > **Folder**.

Keyboard Operations

The keyboard operations that may be found in this document are defined as follows.

Format	Description
Key	Press the key. For example, press **Enter** and press **Tab**.
Key 1+**Key 2**	Press the keys concurrently. For example, pressing **Ctrl**+**Alt** +**A** means the three keys should be pressed concurrently.
Key 1, **Key 2**	Press the keys in turn. For example, pressing **Alt**, **A** means the two keys should be pressed in turn.

Mouse Operations

The mouse operations that may be found in this document are defined as follows.

Copyright © Huawei Technologies Co., Ltd.

Action	Description
Click	Select and release the primary mouse button without moving the pointer.
Double-click	Press the primary mouse button twice continuously and quickly without moving the pointer.
Drag	Press and hold the primary mouse button and move the pointer to a certain position.

Copyright © Huawei Technologies Co., Ltd.

Contents

About This Document....iii
1 Changes in the DBS3900 (ICR) Installation Guide....1-1
2 Installation Preparations....2-1
2.1 Making Documents Available....2-2
2.2 Tools and Instruments....2-2
2.3 Skills and Requirements for Onsite Personnel....2-3
3 Information About the Installation....3-1
3.1 Overview of Devices....3-2
3.2 Installation Options....3-5
3.2.1 Height-Restricted Scenario....3-5
3.2.2 Height-Unrestricted Scenario....3-17
3.3 Dimensions and Installation Clearance Requirements....3-35
4 Unpacking the Equipment....4-1
5 Obtaining the ESN....5-1
6 Installation Process....6-1
7 Assembling the IFS06....7-1
8 Installing the IFS06....8-1
8.1 Installing the IFS06 on the Concrete Floor....8-2
8.2 Installing the IFS06 on the ESD Floor....8-6
9 Installing the Main Bracket for the RRU....9-1
9.1 Installing the Main Bracket for the DC RRU....9-2
9.2 Installing the Main Bracket for the AC RRU....9-3
10 Installing the GPS Surge Protector....10-1
11 Installing the IMB03....11-1
11.1 Installing the IMB03 on the Upper Level Separately....11-2
11.2 Installing the IMB03 on the Lower Level Separately....11-3
11.3 Installing the IMB03s on the Upper and Lower Levels....11-5
12 Installing the Equipotential Cable and PGND Cable....12-1

Copyright © Huawei Technologies Co., Ltd.

13 Installing Devices in the IMB03.....13-1
13.1 Installing the BBU.....13-2
13.2 Installing the DCDU-03B.....13-3
13.3 (Optional) Installing the Power Equipment (DC/DC).....13-4
13.4 (Optional) Installing the Power Equipment (AC/DC).....13-6
14 Installing the RRU.....14-1
14.1 Installing the DC RRU.....14-2
14.2 Installing the AC RRU.....14-5
15 Installing Cables.....15-1
15.1 Cabling Requirements.....15-3
15.2 Cable Connections.....15-4
15.2.1 Cable Connections (-48 V DC, Six RRU3008s).....15-5
15.2.2 Cable Connections (-48 V DC, Six RRU3804s).....15-7
15.2.3 Cable Connections (-48 V DC, Six RRU3201s).....15-8
15.2.4 Cable Connections (-48 V DC, Six RRU3908s).....15-10
15.2.5 Cable Connections (-48 V DC, Three RRU3908s+Three RRU3804s).....15-12
15.2.6 Cable Connections (-48 V DC, Three RRU3008s+Three RRU3804s).....15-16
15.2.7 Cable Connections (-48 V, Three RRU3908s + Three RRU3201s).....15-18
15.2.8 Cable Connections (-48 V DC, Three RRU3008s+Three RRU3201s).....15-22
15.2.9 Cable Connections (-48 V DC, Three RRU3804s+Three RRU3201s).....15-24
15.2.10 Cable Connections (-48 V DC, Six RRU3008s+Six RRU3804s).....15-26
15.2.11 Cable Connections (-48 V DC, Six RRU3908s+Six RRU3804s).....15-28
15.2.12 Cable Connections (-48 V DC, Six RRU3908s+Six RRU3201s).....15-33
15.2.13 Cable Connections (-48 V DC, Six RRU3008s+Six RRU3201s).....15-39
15.2.14 Cable Connections (-48 V DC, Six RRU3804s+Six RRU3201s).....15-41
15.2.15 Cable Connections (AC RRU).....15-43
15.2.16 Cable Connections (220 V AC).....15-44
15.2.17 Cable Connections (+24 V DC).....15-45
15.3 Cable Installation Process.....15-46
15.4 Cable Routes.....15-47
15.5 Installing the PGND Cable for the RRU.....15-48
15.6 Installing the Power Cable for the BBU.....15-50
15.7 Installing the Input Power Cable.....15-51
15.8 (Optional) Installing the Power Cable and Monitoring Signal Cable for the DCDU.....15-54
15.9 Installing the Power Cable for the RRU.....15-56
15.10 Installing the E1/T1 Cable (FE/GE Cable or FE/GE Optical Cable).....15-59
15.11 Installing the CPRI Optical Cable.....15-61
15.12 Installing the Antenna Jumper for the RRU.....15-64
15.13 Installing a GPS Clock Signal Cable.....15-67
16 Checklist for the DBS3900 Hardware Installation.....16-1
17 Performing the DBS3900 Power-On Check.....17-1

Copyright © Huawei Technologies Co., Ltd.

18 Installing the Cover Plate for the IMB03.....18-1

Copyright © Huawei Technologies Co., Ltd.

Figures

Figure 3-1 DCDU-03B....3-3
Figure 3-2 BBU3900....3-3
Figure 3-3 RRU....3-4
Figure 3-4 Power equipment (AC/DC)....3-4
Figure 3-5 Power equipment (DC/DC)....3-5
Figure 3-6 Height-restricted scenario....3-6
Figure 3-7 Height-restricted scenario (-48 V DC)....3-7
Figure 3-8 Height-restricted scenario (-48 V DC)....3-8
Figure 3-9 Height-restricted scenario (-48 V DC)....3-9
Figure 3-10 Installation of the DC RRUs on the IFS06....3-10
Figure 3-11 Height-restricted scenario (220 V AC)....3-11
Figure 3-12 Height-restricted scenario (220 V AC)....3-12
Figure 3-13 Installation of the DC RRU on the IFS06....3-13
Figure 3-14 Installation of AC RRUs on the IFS06....3-14
Figure 3-15 Height-restricted scenario (+24 V DC)....3-15
Figure 3-16 Height-restricted scenario (+24 V DC)....3-16
Figure 3-17 Installation of the DC RRUs on the IFS06....3-17
Figure 3-18 Height-unrestricted scenario....3-18
Figure 3-19 Height-unrestricted scenario (-48 V DC)....3-19
Figure 3-20 Height-unrestricted scenario (-48 V DC)....3-20
Figure 3-21 Height-unrestricted triple-mode scenario (-48 V DC)....3-21
Figure 3-22 Height-unrestricted scenario (-48 V DC)....3-22
Figure 3-23 Height-unrestricted triple-mode scenario (-48 V DC)....3-23
Figure 3-24 Installation of the DC RRUs on the IFS06....3-24
Figure 3-25 Height-unrestricted scenario (220 V AC)....3-25
Figure 3-26 Height-unrestricted scenario (220 V AC)....3-26
Figure 3-27 Height-unrestricted scenario (220 V AC)....3-27
Figure 3-28 Height-unrestricted triple-mode scenario (220 V AC)....3-28
Figure 3-29 Installation of the DC RRUs on the IFS06....3-29
Figure 3-30 Installation of AC RRUs on the IFS06....3-30
Figure 3-31 Height-unrestricted scenario (+24 V DC)....3-31
Figure 3-32 Height-unrestricted scenario (+24 V DC)....3-32
Figure 3-33 Height-unrestricted scenario (+24 V DC)....3-33

Copyright © Huawei Technologies Co., Ltd.

Figure 3-34 Height-unrestricted triple-mode scenario (+24 V DC)....3-34
Figure 3-35 Installation of the DC RRUs on the IFS06....3-35
Figure 3-36 Dimensions of the IFS06....3-36
Figure 3-37 Dimensions of the IMB03....3-36
Figure 3-38 Recommended clearance for the ICR (DC-RRU-based)....3-37
Figure 3-39 Recommended clearance for the ICR (AC-RRU-based)....3-38
Figure 3-40 Minimum clearance for the ICR in the height-unrestricted scenario....3-39
Figure 3-41 Minimum clearance for the ICR in the height-restricted scenario....3-40
Figure 3-42 Minimum clearance for the ICR (AC-RRU-based)....3-41
Figure 3-43 Clearance requirements for combined cabinets....3-42
Figure 5-1 Obtaining the ESN (1)....5-1
Figure 5-2 Obtaining the ESN (2)....5-2
Figure 6-1 Installation process....6-2
Figure 7-1 Installing the rear feet....7-1
Figure 7-2 Installing the front feet....7-2
Figure 7-3 Moving down the adjustable beam....7-3
Figure 7-4 Installing the cable rack....7-4
Figure 7-5 Installing the adapting piece for the GPS surge protector....7-5
Figure 8-1 Marking anchor points....8-2
Figure 8-2 Drilling holes....8-3
Figure 8-3 Assembling an expansion bolt....8-3
Figure 8-4 Installing an expansion bolt....8-4
Figure 8-5 Removing a bolt....8-4
Figure 8-6 Installing the bolts....8-4
Figure 8-7 Pre-tightening the bolts....8-5
Figure 8-8 Checking and adjusting the level of the IFS06....8-5
Figure 8-9 Tightening the bolts....8-6
Figure 8-10 Support for installing the ESD floor....8-6
Figure 8-11 Marking anchor points....8-7
Figure 8-12 Drilling holes....8-8
Figure 8-13 Installing the support....8-8
Figure 8-14 Removing the bolts....8-9
Figure 8-15 Install the IFS06....8-10
Figure 8-16 Pre-tightening the bolts....8-10
Figure 8-17 Checking and adjusting the level of the ICR....8-11
Figure 8-18 Tightening the bolts....8-11
Figure 9-1 Main and auxiliary brackets for the RRU....9-1
Figure 9-2 Installing the main bracket in the height-unrestricted scenario....9-2
Figure 9-3 Installing the main bracket in the height-restricted scenario....9-3
Figure 9-4 Installing the main bracket in the height-unrestricted scenario....9-4
Figure 9-5 Installing the main bracket in the height-restricted scenario....9-5
Figure 10-1 GPS surge protector....10-1

Copyright © Huawei Technologies Co., Ltd.

Figure 10-2 Removing the insert nut and toothed washer....10-2
Figure 10-3 Installing the connector....10-2
Figure 10-4 Installing the GPS surge protector....10-2
Figure 10-5 Installing the PGND cable for the GPS surge protector....10-3
Figure 11-1 Removing the protection plates....11-2
Figure 11-2 Installing mounting ears horizontally....11-2
Figure 11-3 Securing the IMB03 to the feet of the ICR....11-3
Figure 11-4 Removing the protection plates....11-4
Figure 11-5 Installing mounting ears vertically....11-4
Figure 11-6 Securing the IMB03 on the feet of the ICR....11-5
Figure 11-7 Removing the protection plates from the lower-level IMB03....11-5
Figure 11-8 Installing mounting ears vertically....11-6
Figure 11-9 Securing the IMB03 to the feet of the ICR....11-6
Figure 11-10 Removing the protection plates from the upper-level IMB03....11-7
Figure 11-11 Installing mounting ears horizontally on the upper-level IMB03....11-7
Figure 11-12 Securing the IMB03 to the feet of the ICR....11-8
Figure 12-1 Installation of the equipotential cable and PGND cable....12-2
Figure 13-1 Configurations of the slots in the IMB03....13-1
Figure 13-2 Removing the mounting ears....13-2
Figure 13-3 Installing the mounting ears reversely....13-2
Figure 13-4 Installing the BBU into the slot in the IMB03....13-3
Figure 13-5 Installing the DCDU-03B into the slot in the IMB03....13-4
Figure 13-6 Installing the PGND cable for the DCDU-03B....13-4
Figure 13-7 Reinstalling the mounting ears....13-5
Figure 13-8 Installing the power equipment (DC/DC) in the IMB03....13-5
Figure 13-9 Installing the PGND cable for the power equipment (DC/DC)....13-6
Figure 13-10 Installing the power equipment (AC/DC) in the IMB03....13-7
Figure 13-11 Installing the PGND cable for the power equipment (AC/DC)....13-8
Figure 14-1 Removing the adapting piece and cover plate....14-2
Figure 14-2 Removing the screws....14-3
Figure 14-3 Reinstalling the adapting piece and cover plate....14-3
Figure 14-4 Connecting the PGND cable for the RRU to the wiring terminal at the bottom....14-4
Figure 14-5 Installing the RRU on the main bracket....14-4
Figure 14-6 Installing six RRUs....14-5
Figure 14-7 Connecting the PGND cable for the RRU to the wiring terminal at the bottom....14-6
Figure 14-8 Installing the AC RRU on the main bracket....14-7
Figure 15-1 Cable connections (-48 V DC, six RRU3008s)....15-6
Figure 15-2 Cable connections (-48 V DC, six RRU3804s)....15-7
Figure 15-3 Cable connections (-48 V DC, six RRU3201s)....15-9
Figure 15-4 Cable connections (-48 V DC, six RRU3908s)....15-11
Figure 15-5 Cable connections in the dual-mode scenario (-48 V, three RRU3908s + three RRU3804s)....15-13
Figure 15-6 Cable Connections in triple-mode scenario (-48 V DC, Three RRU3908s + Three RRU3804s) 15-15

Copyright © Huawei Technologies Co., Ltd.

Figure 15-7 Cable connections (-48 V DC, three RRU3008s+three RRU3804s).....15-17
Figure 15-8 Cable connections in the dual-mode scenario (-48 V, three RRU3908s + three RRU3201s).....15-19
Figure 15-9 Cable connections in the triple-mode scenario (-48 V, three RRU3908s + three RRU3201s).....15-21
Figure 15-10 Cable connections (-48 V DC, three RRU3008s+three RRU3201s).....15-23
Figure 15-11 Cable connections (-48 V DC, three RRU3804s+three RRU3201s).....15-25
Figure 15-12 Cable connections (-48 V DC, six RRU3008s+six RRU3804s).....15-27
Figure 15-13 Cable connections in the dual-mode scenario (-48 V, six RRU3908s + six RRU3804s).....15-29
Figure 15-14 Cable connections in the GSM+LTE scenario (-48 V, six RRU3908s).....15-31
Figure 15-15 Cable connections in the UMTS Only scenario (-48 V, six RRU3804s).....15-32
Figure 15-16 Cable connections in the dual-mode scenario (-48 V, six RRU3908s + six RRU3201s).....15-34
Figure 15-17 Cable connections in the GSM+UMTS Only scenario (-48 V DC, six RRU3908s).....15-36
Figure 15-18 Cable connections in the LTE Only scenario (-48 V DC, six RRU3201s).....15-38
Figure 15-19 Cable connections (-48 V DC, six RRU3008s+six RRU3201s).....15-40
Figure 15-20 Cable connections (-48 V DC, six RRU3804s+six RRU3201s).....15-42
Figure 15-21 Cable connections (AC RRU).....15-43
Figure 15-22 Cable connections (220 V AC).....15-45
Figure 15-23 Cable connections (+24 V DC).....15-46
Figure 15-24 Process of installing the ICR-related cables.....15-47
Figure 15-25 Cable routes.....15-48
Figure 15-26 Connections of the PGND cables for the DC RRU.....15-49
Figure 15-27 Connections of the PGND cables for the AC RRU.....15-50
Figure 15-28 Installing the power cable for the BBU.....15-51
Figure 15-29 Installing the input power cable.....15-53
Figure 15-30 Installing the power cable and monitoring signal cable (+24 V DC).....15-55
Figure 15-31 Installing the power cable and monitoring signal cable (220 V AC).....15-56
Figure 15-32 Connections of the power cable for the DC RRU.....15-57
Figure 15-33 Connections of the power cable for the AC RRU.....15-59
Figure 15-34 Connections of the E1/T1 cable.....15-60
Figure 15-35 Installing the optical module.....15-61
Figure 15-36 Connections of the CPRI optical cable for six DC RRUs.....15-62
Figure 15-37 Connections of the CPRI optical cable for 12 DC RRUs.....15-63
Figure 15-38 Installing the optical module.....15-63
Figure 15-39 Connections of the CPRI optical cable for AC RRUs.....15-64
Figure 15-40 Connections of the antenna jumper for the DC RRU.....15-66
Figure 15-41 Connections of the antenna jumper for the AC RRU.....15-67
Figure 15-42 GPS clock signal cable.....15-68
Figure 17-1 BBU power-on check process..... 17-2
Figure 17-2 RRU power-on check process..... 17-3
Figure 18-1 Installing the cover plate.....18-1
Figure 18-2 Securing the cover plate.....18-2

Copyright © Huawei Technologies Co., Ltd.

Tables

Table 3-1 Installation of three RRUs (on the lower part of the IFS06 by default)....3-7
Table 3-2 Installation of 6 RRUs (in GSM+UMTS mode)....3-8
Table 3-3 Installation of 6 RRUs (in GSM+LTE mode)....3-8
Table 3-4 Installation of 6 RRUs (in UMTS+LTE mode)....3-9
Table 3-5 Installation of 12 RRUs (in GSM+UMTS mode)....3-9
Table 3-6 Installation of 12 RRUs (in GSM+LTE mode)....3-9
Table 3-7 Installation of 12 RRUs (in UMTS+LTE mode)....3-10
Table 3-8 Installation of three RRUs (on the lower part of the IFS06 by default)....3-11
Table 3-9 Installation of 6 RRUs (in GSM+UMTS mode)....3-12
Table 3-10 Installation of 6 RRUs (in GSM+LTE mode)....3-12
Table 3-11 Installation of 6 RRUs (in UMTS+LTE mode)....3-13
Table 3-12 Installation of three RRUs (on the lower part of the IFS06 by default)....3-15
Table 3-13 Installation of 6 RRUs (in GSM+UMTS mode)....3-16
Table 3-14 Installation of 6 RRUs (in GSM+LTE mode)....3-16
Table 3-15 Installation of 6 RRUs (in UMTS+LTE mode)....3-17
Table 3-16 Installation of three RRUs (on the lower part of the IFS06 by default)....3-19
Table 3-17 Installation of 6 RRUs (in GSM+UMTS mode)....3-20
Table 3-18 Installation of 6 RRUs (in GSM+LTE mode)....3-20
Table 3-19 Installation of 6 RRUs (in UMTS+LTE mode)....3-21
Table 3-20 Installation of six RRUs (in GSM+UMTS+LTE mode)....3-21
Table 3-21 Installation of 12 RRUs (in GSM+UMTS mode)....3-22
Table 3-22 Installation of 12 RRUs (in GSM+LTE mode)....3-22
Table 3-23 Installation of 12 RRUs (in UMTS+LTE mode)....3-22
Table 3-24 Installation of six RRUs (in GSM+UMTS+LTE mode)....3-23
Table 3-25 Installation of three RRUs (on the lower part of the IFS06 by default)....3-25
Table 3-26 Installation of 6 RRUs (in GSM+UMTS mode)....3-26
Table 3-27 Installation of 6 RRUs (in GSM+LTE mode)....3-26
Table 3-28 Installation of 6 RRUs (in UMTS+LTE mode)....3-27
Table 3-29 Installation of 12 RRUs (in GSM+UMTS mode)....3-27
Table 3-30 Installation of 12 RRUs (in GSM+LTE mode)....3-27
Table 3-31 Installation of 12 RRUs (in UMTS+LTE mode)....3-28
Table 3-32 Installation of six RRUs (in GSM+UMTS+LTE mode)....3-28
Table 3-33 Installation of three RRUs (on the lower part of the IFS06 by default)....3-31

Copyright © Huawei Technologies Co., Ltd.

Table 3-34 Installation of 6 RRUs (in GSM+UMTS mode)....3-32
Table 3-35 Installation of 6 RRUs (in GSM+LTE mode)....3-32
Table 3-36 Installation of 6 RRUs (in UMTS+LTE mode)....3-33
Table 3-37 Installation of 12 RRUs (in GSM+UMTS mode)....3-33
Table 3-38 Installation of 12 RRUs (in GSM+LTE mode)....3-33
Table 3-39 Installation of 12 RRUs (in UMTS+LTE mode)....3-34
Table 3-40 Installation of 12 RRUs (in GSM+UMTS+LTE mode)....3-34
Table 15-1 Cable description....15-6
Table 15-2 Cable description....15-8
Table 15-3 Cable description....15-10
Table 15-4 Cable description....15-11
Table 15-5 Cable description....15-13
Table 15-6 Cable description....15-16
Table 15-7 Cable description....15-18
Table 15-8 Cable description....15-19
Table 15-9 Cable description....15-22
Table 15-10 Cable description....15-23
Table 15-11 Cable description....15-25
Table 15-12 Cable description....15-28
Table 15-13 Cable description....15-30
Table 15-14 Cable description....15-31
Table 15-15 Cable description....15-33
Table 15-16 Cable description....15-35
Table 15-17 Cable description....15-36
Table 15-18 Cable description....15-39
Table 15-19 Cable description....15-41
Table 15-20 Cable description....15-43
Table 15-21 Cable description....15-44
Table 16-1 Hardware installation checklist....16-1

Copyright © Huawei Technologies Co., Ltd.

1 Changes in the DBS3900 (ICR) Installation Guide

01 (2011-03-30)

This is the first official release.

Compared with Draft A (2011-01-30), no content is changed.

Compared with Draft A (2011-01-30), no content is added.

Compared with Draft A (2011-01-30), no content is deleted.

Draft A (2011-01-30)

This is the draft issue.

Compared with MBTS V100R003C00, WCDMA-NodeB V200R012C00, GSM-BTS V100R012C00 and eNodeB V100R002C00, , this issue incorporates the following changes:

Content	Change Description
3.2 Installation Options	The structure of the section is changed.

Compared with MBTS V100R003C00, WCDMA-NodeB V200R012C00, GSM-BTS V100R012C00 and eNodeB V100R002C00, this issue is added with the following topics:

- The triple-mode installation scenario is added.
- The cable connections in the triple-mode installation scenario is added.

Compared with MBTS V100R003C00, WCDMA-NodeB V200R012C00, GSM-BTS V100R012C00 and eNodeB V100R002C00, no content is deleted.

Copyright © Huawei Technologies Co., Ltd.

2 Installation Preparations

About This Chapter

This chapter describes the tools and instruments required for installation and the skills and prerequisites required for onsite installation engineers.

2.1 Making Documents Available
Before installing the DBS3900, obtain related information from the following document:

2.2 Tools and Instruments
This section describes the tools and instruments required for installation.

2.3 Skills and Requirements for Onsite Personnel
Onsite personnel must be qualified and trained. Before performing any operation, onsite personnel must be familiar with correct operation methods and safety precautions.

Copyright © Huawei Technologies Co., Ltd.

2.1 Making Documents Available

Before installing the DBS3900, obtain related information from the following document:

- Installation Reference
- BBU3900 Hardware Description
- BBU3900 Hardware Maintenance Guide

2.2 Tools and Instruments

This section describes the tools and instruments required for installation.

Marker 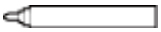	Phillips screwdriver (M4, M5, M6, and M8) Flat-head screwdriver (M4, M5, M6, and M8)	Diagonal pliers 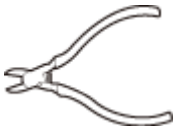
Adjustable wrench (capacity ≤ 19 mm)	Socket wrench (M10 and M12)	Torque wrench (30 N·m to 50 N·m)
Phillips torque screwdriver 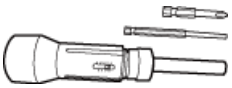	Crimping tool 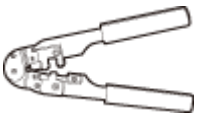	Wire clippers
Rubber mallet	Guarded blade utility knife	Wire stripper
Hammer drill (Ø16) 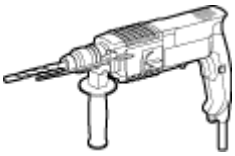	Heat gun	Level

Huawei Proprietary and Confidential
Copyright © Huawei Technologies Co., Ltd.

Multimeter	Measuring tape	Vacuum cleaner
ESD gloves 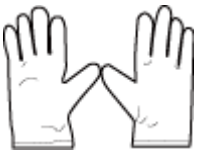	ESD wrist strap	Hydraulic pliers 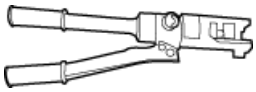

2.3 Skills and Requirements for Onsite Personnel

Onsite personnel must be qualified and trained. Before performing any operation, onsite personnel must be familiar with correct operation methods and safety precautions.

Before the installation, pay attention to the following items:

- The customer's technical engineers must be trained by Huawei and be familiar with the proper installation and operation methods.
- The number of onsite personnel depends on the engineering schedule and installation environment. Generally, only three to five onsite personnel are necessary.

Copyright © Huawei Technologies Co., Ltd.

3 Information About the Installation

About This Chapter

This chapter describes the information about the installation, including exterior, installation scenario, and space requirements

3.1 Overview of Devices
This chapter describes the devices involved in the installation of the DBS3900.

3.2 Installation Options
The installation options vary according to height-restricted and height-unrestricted scenarios.

3.3 Dimensions and Installation Clearance Requirements
This section describes the dimensions and installation clearance requirements for the relevant devices.

Copyright © Huawei Technologies Co., Ltd.

3.1 Overview of Devices

This chapter describes the devices involved in the installation of the DBS3900.

IFS06

The IFS06 is an Indoor Floor Installation Support (IFS). It is used for installing DBS3900 devices in a centralized manner.

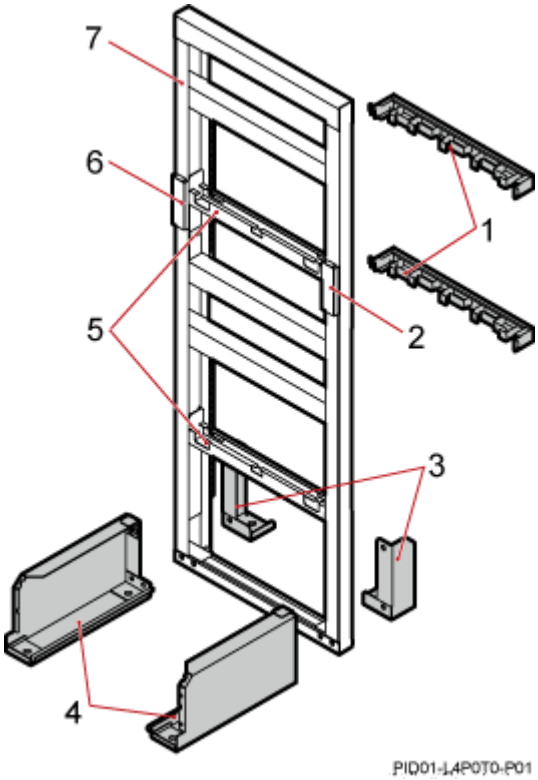

(1) Cable rack	(2) Ground bar 2	(3) Rear foot	(4) Front foot
(5) Adjustable beam	(6) Ground bar 1	(7) Main frame	-

NOTE

In this document, the cable colors and exteriors of the devices are for reference only.

IMB03

The IMB03 is an Indoor Mini Box (IMB). It is used for installing the BBU and power devices.

Huawei Proprietary and Confidential
Copyright © Huawei Technologies Co., Ltd.

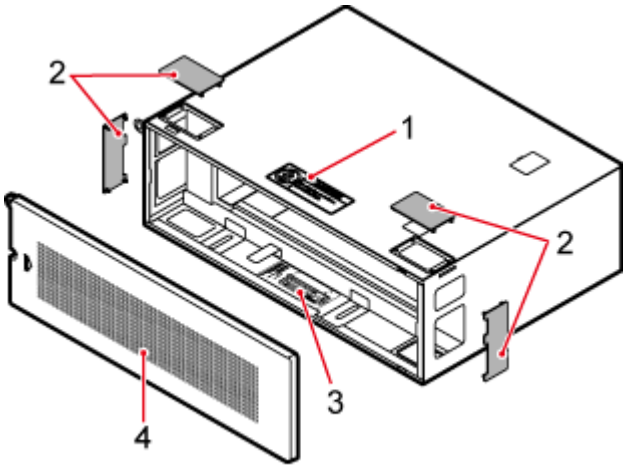

PID02-L4P0T0-P01

(1) NO STEPPING sign (2) Protection plate

(3) Slot assignment label (4) Cover plate

Other Devices

Figure 3-1 DCDU-03B

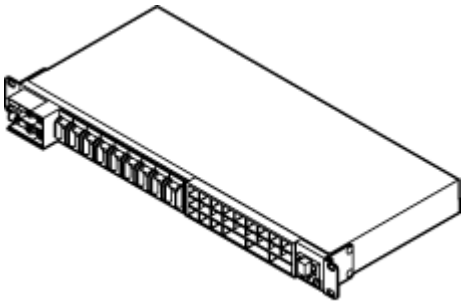

PID06-L4P0T0-P01

Figure 3-2 BBU3900

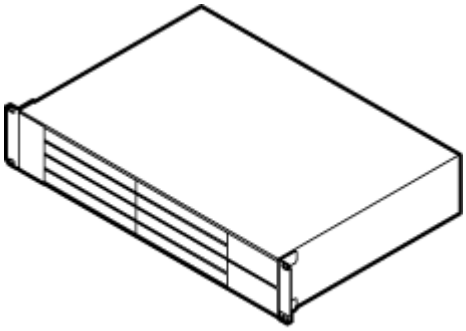

PID04-L4P0T0-P01

Copyright © Huawei Technologies Co., Ltd.

Figure 3-3 RRU

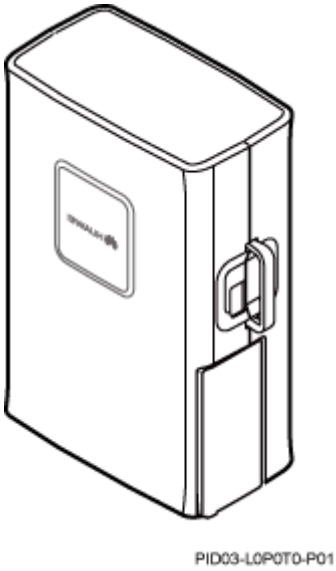

WARNING

- Place the foam pad or cardboard under the RRU to prevent any damage to the housing of the RRU.
- The load-bearing capacity of the RF ports at the bottom of the RRU is low. Do not stand the RRU upright.

Figure 3-4 Power equipment (AC/DC)

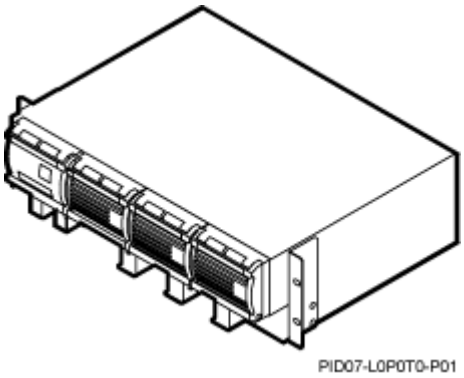

Huawei Proprietary and Confidential
Copyright © Huawei Technologies Co., Ltd.

Figure 3-5 Power equipment (DC/DC)

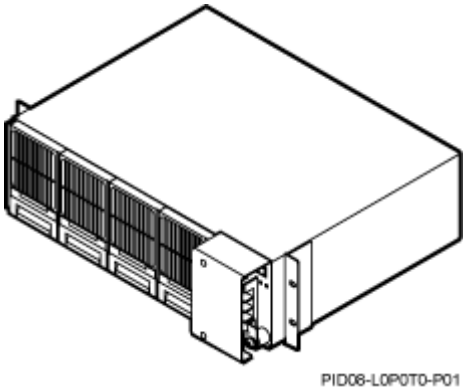

3.2 Installation Options

The installation options vary according to height-restricted and height-unrestricted scenarios.

NOTE

The ICR is an indoor centralized rack, integrating the IFS06 with the IMB03.

The IFS06 is an indoor floor installation support.

The IMB03 is an indoor mini box.

3.2.1 Height-Restricted Scenario
This section describes the installation of the DBS3900 on the ICR in the height-restricted scenario.

3.2.2 Height-Unrestricted Scenario
This section describes the installation of the DBS3900 on the ICR in the height-unrestricted scenario.

3.2.1 Height-Restricted Scenario

This section describes the installation of the DBS3900 on the ICR in the height-restricted scenario.

In the scenario where a cable rack is 1.8 m to 2 m above the floor (hereinafter referred to as the height-restricted scenario), the RRUs are installed on beam 2 and beam 4, as shown in **Figure 3-6**.

Copyright © Huawei Technologies Co., Ltd.

Figure 3-6 Height-restricted scenario

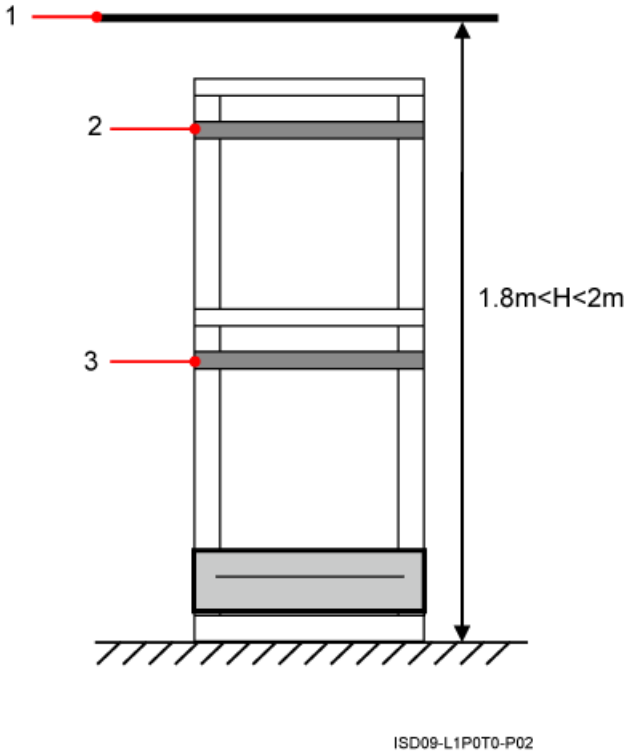

(1) Cable rack (2) Beam 2 (3) Beam 4

Height-Restricted Scenario (-48 V)

This section describes the -48 V height-restricted scenario. In this scenario, RRUs can be installed on the IFS06 with the IMB03 or on the IFS06 independently.

RRU and IMB03 combination installation scenario (IFS06+IMB03+RRU)

In this scenario, three RRUs, six RRUs, or 12 RRUs are installed.

- IFS06+IMB03+RRU (Three DC RRUs)

Huawei Proprietary and Confidential
Copyright © Huawei Technologies Co., Ltd.

Figure 3-7 Height-restricted scenario (-48 V DC)

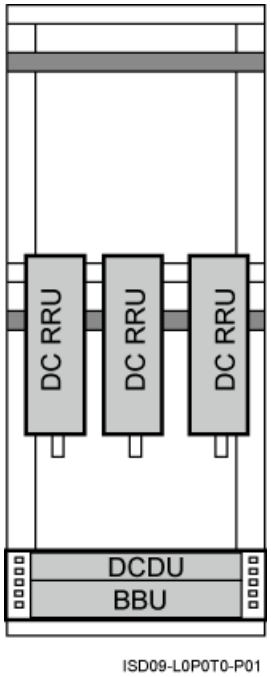

Table 3-1 Installation of three RRUs (on the lower part of the IFS06 by default)

Position	GSM Mode	UMTS Mode	LTE Mode	GSM+UMTS/ GSM+LTE
Lower part	Three RRU3008s, or three RRU3004s	Three RRU3804s, three RRU3801Es, three RRU3806s, three RRU3808s, or three RRU3805s	Three RRU3201s, three RRU3211s, three RRU3203s, three RRU3233s, three RRU3222s, or three RRU3232s	Three RRU3908s, or three RRU3920s

NOTE

The RRU3008, and RRU3004 support the GSM mode. The following description is based on the RRU3008.

The RRU3804, RRU3801E, RRU3806, RRU3808, and RRU3805 support the UMTS mode. The following description is based on the RRU3804.

The RRU3201, RRU3211, RRU3203, RRU3233, RRU3222, and RRU3232 support the LTE mode. The following description is based on the RRU3201.

The RRU3908 and RRU3920 support the multi-mode . The following description is based on the RRU3908.

- IFS06+IMB03+RRU (Six DC RRUs)

Copyright © Huawei Technologies Co., Ltd.

Figure 3-8 Height-restricted scenario (-48 V DC)

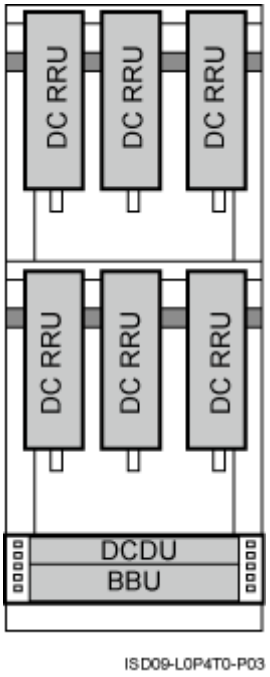

Table 3-2 Installation of 6 RRUs (in GSM+UMTS mode)

Position	GSM Mode	UMTS Mode	GSM +UMTS Mode	GSM +UMTS Hybrid Co-Cabinet	GSM +UMTS Co-Cabinet
Upper part	Three RRU3008s	Three RRU3804s	Three RRU3908s	Three RRU3908s	Three RRU3008s
Lower part	Three RRU3008s	Three RRU3804s	Three RRU3908s	Three RRU3804s	Three RRU3804s

Table 3-3 Installation of 6 RRUs (in GSM+LTE mode)

Position	GSM Mode	LTE Mode	GSM+LTE Hybrid Co-Cabinet	GSM+LTE Co-Cabinet
Upper part	Three RRU3008s	Three RRU3201s	Three RRU3908s	Three RRU3008s
Lower part	Three RRU3008s	Three RRU3201s	Three RRU3201s	Three RRU3201s

Huawei Proprietary and Confidential
Copyright © Huawei Technologies Co., Ltd.

Table 3-4 Installation of 6 RRUs (in UMTS+LTE mode)

Position	UMTS Mode	LTE Mode	UMTS+LTE Co-Cabinet
Upper part	Three RRU3804s	Three RRU3201s	Three RRU3804s
Lower part	Three RRU3804s	Three RRU3201s	Three RRU3201s

- IFS06+IMB03+RRU (12 DC RRUs)

Figure 3-9 Height-restricted scenario (-48 V DC)

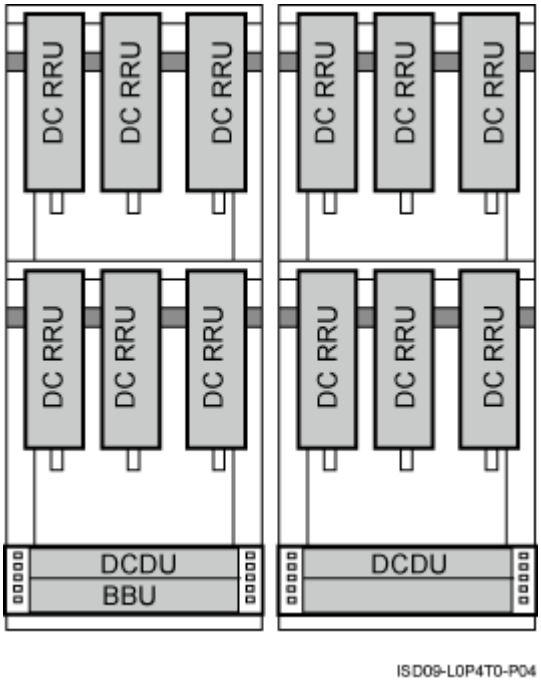

Table 3-5 Installation of 12 RRUs (in GSM+UMTS mode)

Position	GSM+UMTS Hybrid Co-Cabinet	GSM+UMTS Co-Cabinet
ICR1	Six RRU3908s	Six RRU3008s
ICR2	Six RRU3804s	Six RRU3804s

Table 3-6 Installation of 12 RRUs (in GSM+LTE mode)

Position	GSM+UMTS Hybrid Co-Cabinet	GSM+UMTS Co-Cabinet
ICR1	Six RRU3908s	Six RRU3008s
ICR2	Six RRU3201s	Six RRU3201s

Copyright © Huawei Technologies Co., Ltd.

Table 3-7 Installation of 12 RRUs (in UMTS+LTE mode)

Position	UMTS+LTE Co-Cabinet
ICR1	Six RRU3804s
ICR2	Six RRU3201s

Independent RRU installation scenario (IFS06+RRU)

In this scenario, three RRUs or six RRUs are installed. The configurations and installations of the RRUs in the IFS06+RRU scenario and in the IFS06+IMB03+RRU scenario are the same. For details, see **RRU and IMB03 combination installation scenario (IFS06+IMB03 +RRU)**. **Figure 3-10** takes the installation of six RRUs as an example.

Figure 3-10 Installation of the DC RRUs on the IFS06

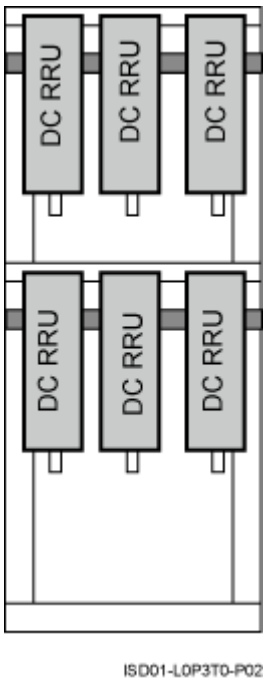

Height-Restricted Scenario (220 V)

This section describes the 220 V height-restricted scenario. In this scenario, RRUs can be installed on the IFS06 with the IMB03 or on the IFS06 independently.

RRU and IMB03 combination installation scenario (IFS06+IMB03+RRU)

In this scenario, three RRUs or six RRUs are installed.

- IFS06+IMB03+RRU (Three DC RRUs)

Huawei Proprietary and Confidential
Copyright © Huawei Technologies Co., Ltd.

Figure 3-11 Height-restricted scenario (220 V AC)

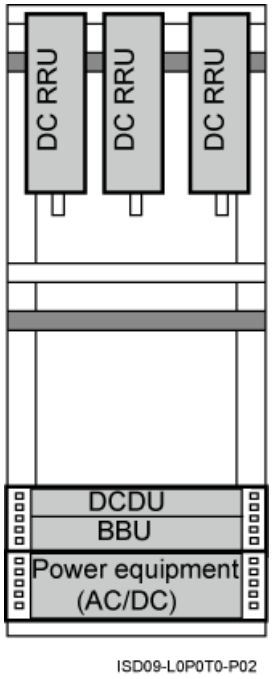

Table 3-8 Installation of three RRUs (on the lower part of the IFS06 by default)

Position	GSM Mode	UMTS Mode	LTE Mode	GSM+UMTS/ GSM+LTE
Upper part	Three RRU3008s, or three RRU3004s	Three RRU3804s, three RRU3801Es, three RRU3806s, three RRU3808s, or three RRU3805s	Three RRU3201s, three RRU3211s, three RRU3203s, three RRU3233s, three RRU3222s, or three RRU3232s	Three RRU3908s, or three RRU3920s

NOTE

The RRU3008, and RRU3004 support the GSM mode. The following description is based on the RRU3008.

The RRU3804, RRU3801E, RRU3806, RRU3808, and RRU3805 support the UMTS mode. The following description is based on the RRU3804.

The RRU3201, RRU3211, RRU3203, RRU3233, RRU3222, and RRU3232 support the LTE mode. The following description is based on the RRU3201.

The RRU3908 and RRU3920 support the multi-mode . The following description is based on the RRU3908.

- IFS06+IMB03+RRU (Six DC RRUs)

Copyright © Huawei Technologies Co., Ltd.

Figure 3-12 Height-restricted scenario (220 V AC)

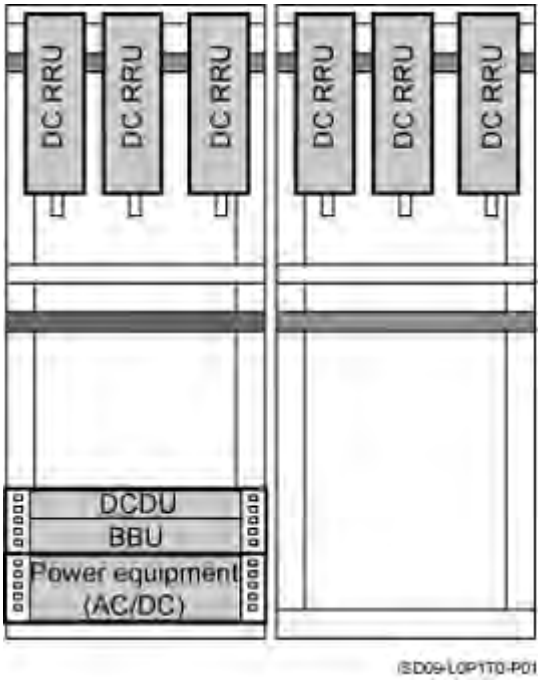

Table 3-9 Installation of 6 RRUs (in GSM+UMTS mode)

Position	GSM Mode	UMTS Mode	GSM +UMTS Mode	GSM +UMTS Hybrid Co-Cabinet	GSM +UMTS Co-Cabinet
ICR1	Three RRU3008s	Three RRU3804s	Three RRU3908s	Three RRU3908s	Three RRU3008s
ICR2	Three RRU3008s	Three RRU3804s	Three RRU3908s	Three RRU3804s	Three RRU3804s

Table 3-10 Installation of 6 RRUs (in GSM+LTE mode)

Position	GSM Mode	LTE Mode	GSM+LTE Hybrid Co-Cabinet	GSM+LTE Co-Cabinet
ICR1	Three RRU3008s	Three RRU3201s	Three RRU3908s	Three RRU3008s
ICR2	Three RRU3008s	Three RRU3201s	Three RRU3201s	Three RRU3201s

Huawei Proprietary and Confidential
Copyright © Huawei Technologies Co., Ltd.

Table 3-11 Installation of 6 RRUs (in UMTS+LTE mode)

Position	UMTS Mode	LTE Mode	UMTS+LTE Co-Cabinet
ICR1	Three RRU3804s	Three RRU3201s	Three RRU3804s
ICR2	Three RRU3804s	Three RRU3201s	Three RRU3201s

Independent RRU installation scenario (IFS06+RRU)

- IFS06+RRU (DC RRU)

In this scenario, three RRUs or six RRUs are installed. The configurations and installations of the RRUs in the IFS06+RRU scenario and in the IFS06+IMB03+RRU scenario are the same. For details, see **RRU and IMB03 combination installation scenario (IFS06+IMB03 +RRU)**. **Figure 3-13** takes the installation of six RRUs as an example.

Figure 3-13 Installation of the DC RRU on the IFS06

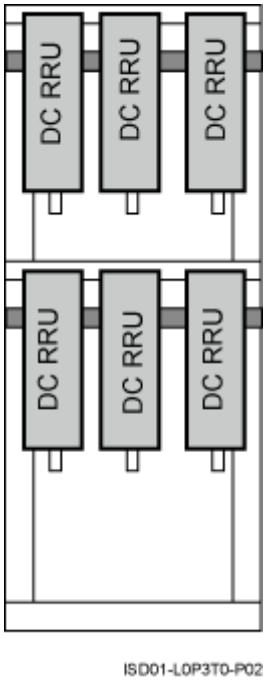

- IFS06+RRU (AC RRU)

Figure 3-14 shows the installation of AC RRUs on the IFS06.

NOTE

The description of the AC RRU in this document is based on the AC RRU3908.

Copyright © Huawei Technologies Co., Ltd.

Figure 3-14 Installation of AC RRUs on the IFS06

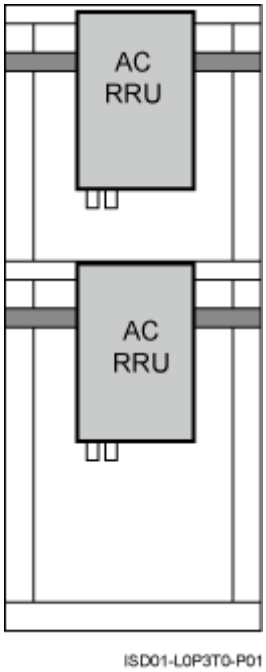

Height-Restricted Scenario (+24 V)

This section describes the +24 V height-restricted scenario. In this scenario, RRUs can be installed on the IFS06 with the IMB03 or on the IFS06 independently.

RRU and IMB03 combination installation scenario (IFS06+IMB03+RRU)

In this scenario, three RRUs or six RRUs are installed.

- IFS06+IMB03+RRU (Three DC RRUs)

Huawei Proprietary and Confidential
Copyright © Huawei Technologies Co., Ltd.

Figure 3-15 Height-restricted scenario (+24 V DC)

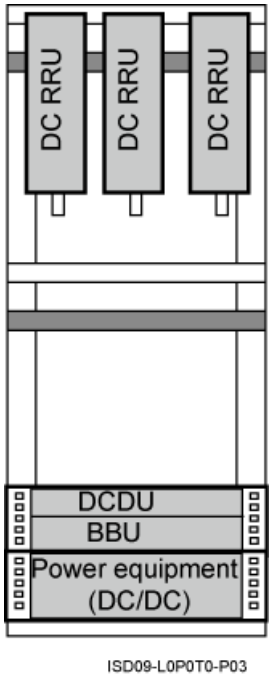

Table 3-12 Installation of three RRUs (on the lower part of the IFS06 by default)

Position	GSM Mode	UMTS Mode	LTE Mode	GSM+UMTS/ GSM+LTE
Upper part	Three RRU3008s, or three RRU3004s	Three RRU3804s, three RRU3801Es, three RRU3806s, three RRU3808s, or three RRU3805s	Three RRU3201s, three RRU3211s, three RRU3203s, three RRU3233s, three RRU3222s, or three RRU3232s	Three RRU3908s, or three RRU3920s

NOTE

The RRU3008, and RRU3004 support the GSM mode. The following description is based on the RRU3008.

The RRU3804, RRU3801E, RRU3806, RRU3808, and RRU3805 support the UMTS mode. The following description is based on the RRU3804.

The RRU3201, RRU3211, RRU3203, RRU3233, RRU3222, and RRU3232 support the LTE mode. The following description is based on the RRU3201.

The RRU3908 and RRU3920 support the multi-mode . The following description is based on the RRU3908.

- IFS06+IMB03+RRU (Six DC RRUs)

Copyright © Huawei Technologies Co., Ltd.

Figure 3-16 Height-restricted scenario (+24 V DC)

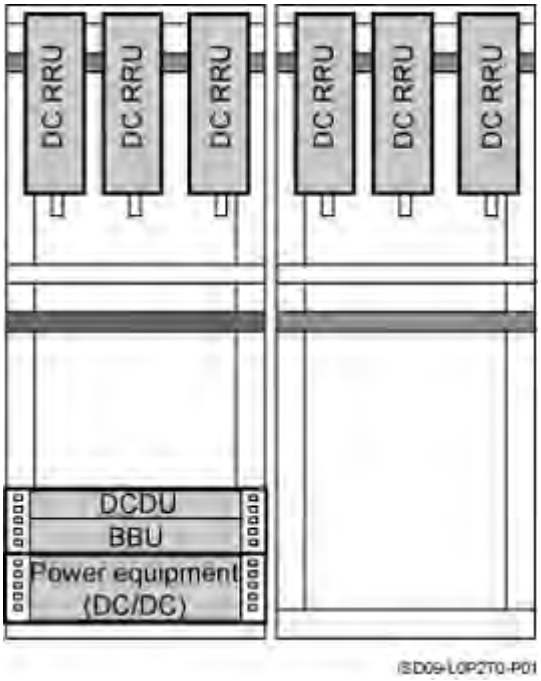

Table 3-13 Installation of 6 RRUs (in GSM+UMTS mode)

Position	GSM Mode	UMTS Mode	GSM +UMTS Mode	GSM +UMTS Hybrid Co-Cabinet	GSM +UMTS Co-Cabinet
ICR1	Three RRU3008s	Three RRU3804s	Three RRU3908s	Three RRU3908s	Three RRU3008s
ICR2	Three RRU3008s	Three RRU3804s	Three RRU3908s	Three RRU3804s	Three RRU3804s

Table 3-14 Installation of 6 RRUs (in GSM+LTE mode)

Position	GSM Mode	LTE Mode	GSM+LTE Hybrid Co-Cabinet	GSM+LTE Co-Cabinet
ICR1	Three RRU3008s	Three RRU3201s	Three RRU3908s	Three RRU3008s
ICR2	Three RRU3008s	Three RRU3201s	Three RRU3201s	Three RRU3201s

Huawei Proprietary and Confidential
Copyright © Huawei Technologies Co., Ltd.

Table 3-15 Installation of 6 RRUs (in UMTS+LTE mode)

Position	UMTS Mode	LTE Mode	UMTS+LTE Co-Cabinet
ICR1	Three RRU3804s	Three RRU3201s	Three RRU3804s
ICR2	Three RRU3804s	Three RRU3201s	Three RRU3201s

Independent RRU installation scenario (IFS06+RRU)

In this scenario, three RRUs or six RRUs are installed. The configurations and installations of the RRUs in the IFS06+RRU scenario and in the IFS06+IMB03+RRU scenario are the same. For details, see **RRU and IMB03 combination installation scenario (IFS06+IMB03 +RRU)**. **Figure 3-17** takes the installation of six RRUs as an example.

Figure 3-17 Installation of the DC RRUs on the IFS06

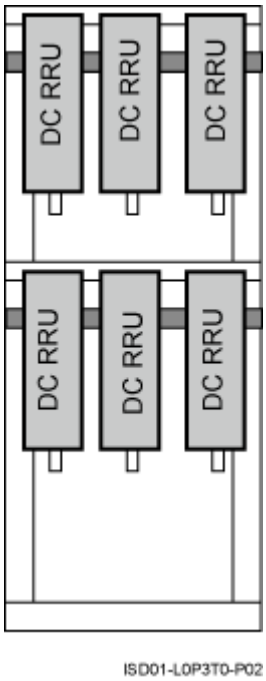

3.2.2 Height-Unrestricted Scenario

This section describes the installation of the DBS3900 on the ICR in the height-unrestricted scenario.

In the scenario where a cable rack is more than 2 m above the floor (hereinafter referred to as the height-unrestricted scenario), the RRUs are installed on beam 1 and beam 3 by default, as shown in **Figure 3-18**.

Copyright © Huawei Technologies Co., Ltd.

Figure 3-18 Height-unrestricted scenario

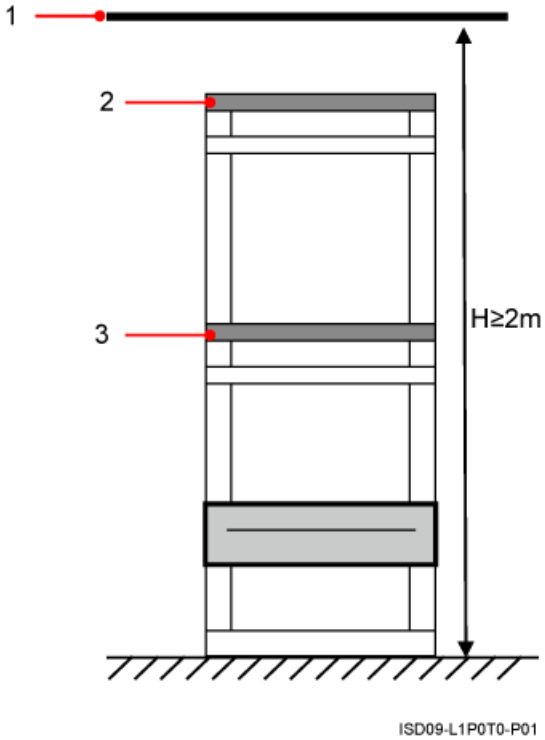

(1) Cable rack (2) Beam 1 (3) Beam 3

Height-Unrestricted Scenario (-48 V)

This section describes the -48 V height-unrestricted scenario. In this scenario, RRUs can be installed on the IFS06 with the IMB03 or on the IFS06 independently.

RRU and IMB03 combination installation scenario (IFS06+IMB03+RRU)

In this scenario, three RRUs, six RRUs, or 12 RRUs are installed.

- IFS06+IMB03+RRU (Three DC RRUs)

Huawei Proprietary and Confidential
Copyright © Huawei Technologies Co., Ltd.

Figure 3-19 Height-unrestricted scenario (-48 V DC)

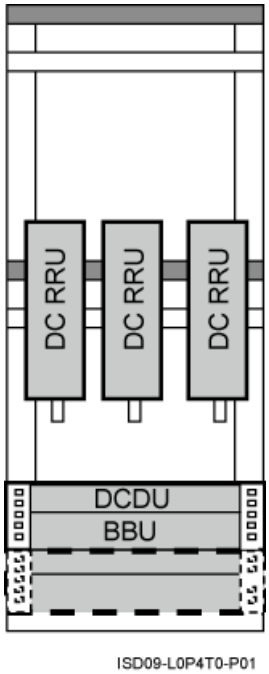

Table 3-16 Installation of three RRUs (on the lower part of the IFS06 by default)

Position	GSM Mode	UMTS Mode	LTE Mode	GSM+UMTS/ GSM+LTE
Lower part	Three RRU3008s, or three RRU3004s	Three RRU3804s, three RRU3801Es, three RRU3806s, three RRU3808s, or three RRU3805s	Three RRU3201s, three RRU3211s, three RRU3203s, three RRU3233s, three RRU3222s, or three RRU3232s	Three RRU3908s, or three RRU3920s

NOTE

The RRU3008, and RRU3004 support the GSM mode. The following description is based on the RRU3008.

The RRU3804, RRU3801E, RRU3806, RRU3808, and RRU3805 support the UMTS mode. The following description is based on the RRU3804.

The RRU3201, RRU3211, RRU3203, RRU3233, RRU3222, and RRU3232 support the LTE mode. The following description is based on the RRU3201.

The RRU3908 and RRU3920 support the multi-mode . The following description is based on the RRU3908.

- IFS06+IMB03+RRU (Six DC RRUs)

Copyright © Huawei Technologies Co., Ltd.

Figure 3-20 Height-unrestricted scenario (-48 V DC)

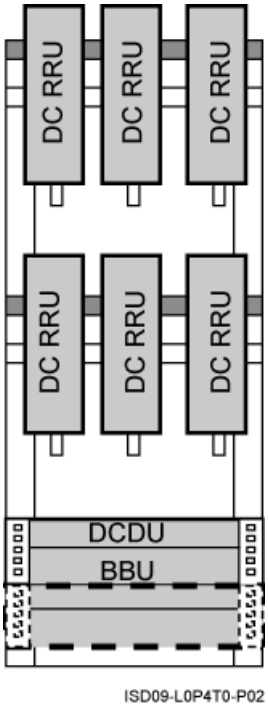

Table 3-17 Installation of 6 RRUs (in GSM+UMTS mode)

Position	GSM Mode	UMTS Mode	GSM +UMTS Mode	GSM +UMTS Hybrid Co-Cabinet	GSM +UMTS Co-Cabinet
Upper part	Three RRU3008s	Three RRU3804s	Three RRU3908s	Three RRU3908s	Three RRU3008s
Lower part	Three RRU3008s	Three RRU3804s	Three RRU3908s	Three RRU3804s	Three RRU3804s

Table 3-18 Installation of 6 RRUs (in GSM+LTE mode)

Position	GSM Mode	LTE Mode	GSM+LTE Hybrid Co-Cabinet	GSM+LTE Co-Cabinet
Upper part	Three RRU3008s	Three RRU3201s	Three RRU3908s	Three RRU3008s
Lower part	Three RRU3008s	Three RRU3201s	Three RRU3201s	Three RRU3201s

Huawei Proprietary and Confidential
Copyright © Huawei Technologies Co., Ltd.

Table 3-19 Installation of 6 RRUs (in UMTS+LTE mode)

Position	UMTS Mode	LTE Mode	UMTS+LTE Co-Cabinet
Upper part	Three RRU3804s	Three RRU3201s	Three RRU3804s
Lower part	Three RRU3804s	Three RRU3201s	Three RRU3201s

NOTE

When 6 RRUs are configured, one DCDU and one BBU are added in the triple mode scenario, as shown in **Figure 3-21**.

Figure 3-21 Height-unrestricted triple-mode scenario (-48 V DC)

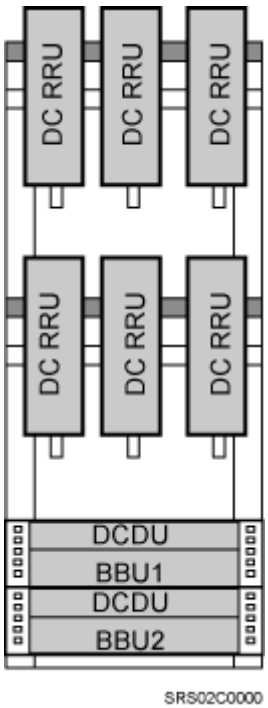

Table 3-20 Installation of six RRUs (in GSM+UMTS+LTE mode)

Position	GU+LTE	GL+UMTS
Upper part	Three RRU3908s	Three RRU3908s
Lower part	Three RRU3201s	Three RRU3804s

- IFS06+IMB03+RRU (12 DC RRUs)

Copyright © Huawei Technologies Co., Ltd.

Figure 3-22 Height-unrestricted scenario (-48 V DC)

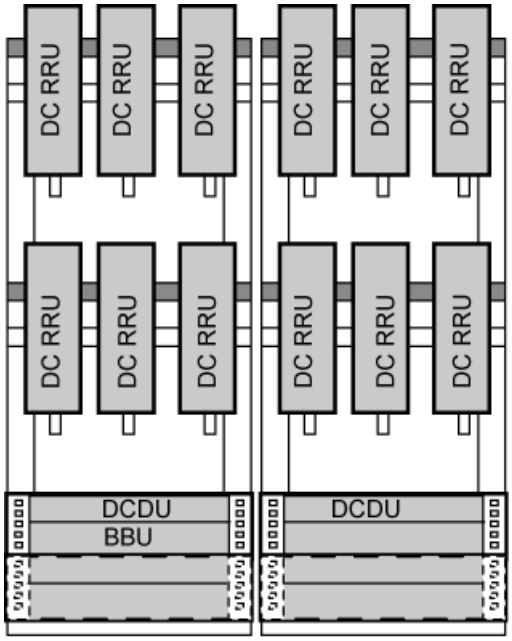

Table 3-21 Installation of 12 RRUs (in GSM+UMTS mode)

Position	GSM+UMTS Hybrid Co-Cabinet	GSM+UMTS Co-Cabinet
ICR1	Six RRU3908s	Six RRU3008s
ICR2	Six RRU3804s	Six RRU3804s

Table 3-22 Installation of 12 RRUs (in GSM+LTE mode)

Position	GSM+UMTS Hybrid Co-Cabinet	GSM+UMTS Co-Cabinet
ICR1	Six RRU3908s	Six RRU3008s
ICR2	Six RRU3201s	Six RRU3201s

Table 3-23 Installation of 12 RRUs (in UMTS+LTE mode)

Position	UMTS+LTE Co-Cabinet
ICR1	Six RRU3804s
ICR2	Six RRU3201s

Huawei Proprietary and Confidential
Copyright © Huawei Technologies Co., Ltd.

NOTE

When 12 RRUs are configured, one BBU is added in the triple mode scenario, as shown in **Figure 3-23**.

Figure 3-23 Height-unrestricted triple-mode scenario (-48 V DC)

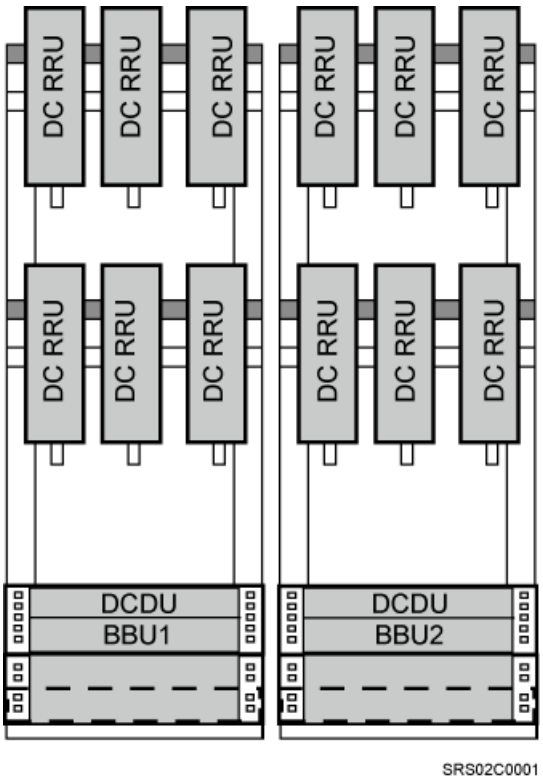

Table 3-24 Installation of six RRUs (in GSM+UMTS+LTE mode)

Position	GU+LTE	GL+UMTS
ICR1	Six RRU3908s	Six RRU3908s
ICR2	Six RRU3201s	Six RRU3804s

Independent RRU installation scenario (IFS06+RRU)

In this scenario, three RRUs or six RRUs are installed. The configurations and installations of the RRUs in the IFS06+RRU scenario and in the IFS06+IMB03+RRU scenario are the same. For details, see **RRU and IMB03 combination installation scenario (IFS06+IMB03 +RRU)**. **Figure 3-24** takes the installation of six RRUs as an example.

Copyright © Huawei Technologies Co., Ltd.

Figure 3-24 Installation of the DC RRUs on the IFS06

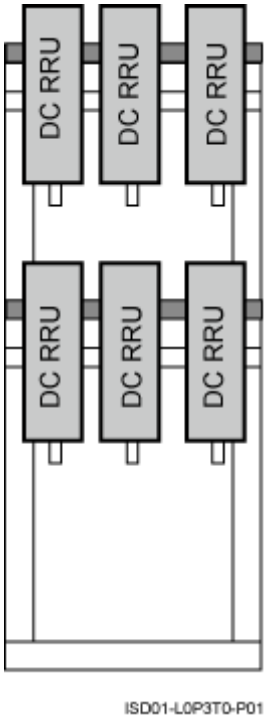

Height-Unrestricted Scenario (220 V)

This section describes the 220 V height-unrestricted scenario. In this scenario, RRUs can be installed on the IFS06 with the IMB03 or on the IFS06 independently.

RRU and IMB03 combination installation scenario (IFS06+IMB03+RRU)

In this scenario, three RRUs, six RRUs, or 12 RRUs are installed.

- IFS06+IMB03+RRU (Three DC RRUs)

Huawei Proprietary and Confidential
Copyright © Huawei Technologies Co., Ltd.

Figure 3-25 Height-unrestricted scenario (220 V AC)

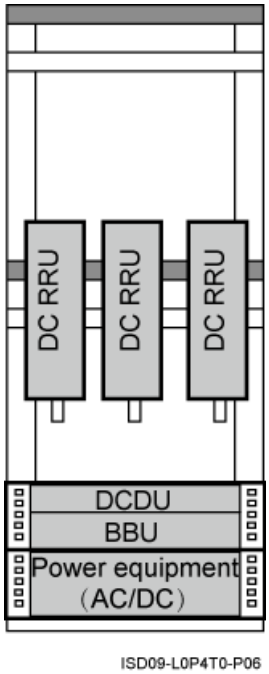

Table 3-25 Installation of three RRUs (on the lower part of the IFS06 by default)

Position	GSM Mode	UMTS Mode	LTE Mode	GSM+UMTS/ GSM+LTE
Lower part	Three RRU3008s, or three RRU3004s	Three RRU3804s, three RRU3801Es, three RRU3806s, three RRU3808s, or three RRU3805s	Three RRU3201s, three RRU3211s, three RRU3203s, three RRU3233s, three RRU3222s, or three RRU3232s	Three RRU3908s, or three RRU3920s

NOTE

The RRU3008, and RRU3004 support the GSM mode. The following description is based on the RRU3008.

The RRU3804, RRU3801E, RRU3806, RRU3808, and RRU3805 support the UMTS mode. The following description is based on the RRU3804.

The RRU3201, RRU3211, RRU3203, RRU3233, RRU3222, and RRU3232 support the LTE mode. The following description is based on the RRU3201.

The RRU3908 and RRU3920 support the multi-mode . The following description is based on the RRU3908.

- IFS06+IMB03+RRU (Three DC RRUs)

Copyright © Huawei Technologies Co., Ltd.

Figure 3-26 Height-unrestricted scenario (220 V AC)

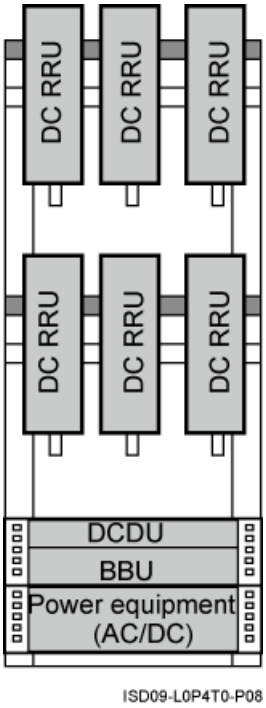

Table 3-26 Installation of 6 RRUs (in GSM+UMTS mode)

Position	GSM Mode	UMTS Mode	GSM +UMTS Mode	GSM +UMTS Hybrid Co-Cabinet	GSM +UMTS Co-Cabinet
Upper part	Three RRU3008s	Three RRU3804s	Three RRU3908s	Three RRU3908s	Three RRU3008s
Lower part	Three RRU3008s	Three RRU3804s	Three RRU3908s	Three RRU3804s	Three RRU3804s

Table 3-27 Installation of 6 RRUs (in GSM+LTE mode)

Position	GSM Mode	LTE Mode	GSM+LTE Hybrid Co-Cabinet	GSM+LTE Co-Cabinet
Upper part	Three RRU3008s	Three RRU3201s	Three RRU3908s	Three RRU3008s
Lower part	Three RRU3008s	Three RRU3201s	Three RRU3201s	Three RRU3201s

Huawei Proprietary and Confidential
Copyright © Huawei Technologies Co., Ltd.

Table 3-28 Installation of 6 RRUs (in UMTS+LTE mode)

Position	UMTS Mode	LTE Mode	UMTS+LTE Co-Cabinet
Upper part	Three RRU3804s	Three RRU3201s	Three RRU3804s
Lower part	Three RRU3804s	Three RRU3201s	Three RRU3201s

- IFS06+IMB03+RRU (12 DC RRUs)

Figure 3-27 Height-unrestricted scenario (220 V AC)

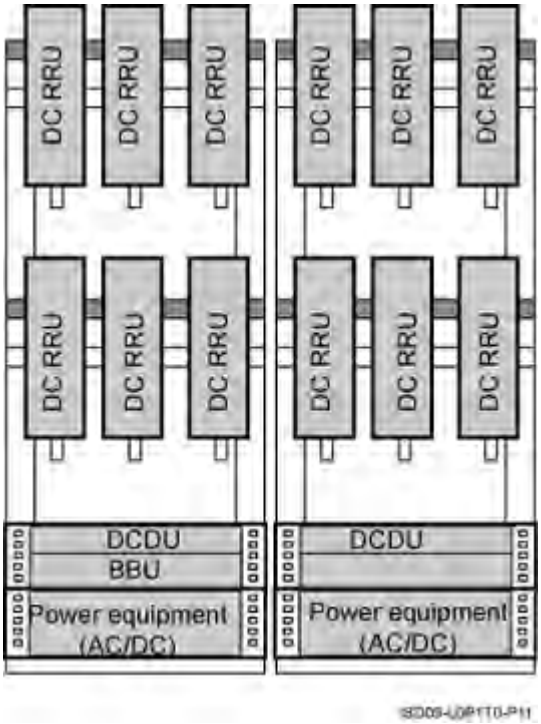

Table 3-29 Installation of 12 RRUs (in GSM+UMTS mode)

Position	GSM+UMTS Hybrid Co-Cabinet	GSM+UMTS Co-Cabinet
ICR1	Six RRU3908s	Six RRU3008s
ICR2	Six RRU3804s	Six RRU3804s

Table 3-30 Installation of 12 RRUs (in GSM+LTE mode)

Position	GSM+UMTS Hybrid Co-Cabinet	GSM+UMTS Co-Cabinet
ICR1	Six RRU3908s	Six RRU3008s

Copyright © Huawei Technologies Co., Ltd.

Position	GSM+UMTS Hybrid Co-Cabinet	GSM+UMTS Co-Cabinet
ICR2	Six RRU3201s	Six RRU3201s

Table 3-31 Installation of 12 RRUs (in UMTS+LTE mode)

Position	UMTS+LTE Co-Cabinet
ICR1	Six RRU3804s
ICR2	Six RRU3201s

NOTE

When 12 RRUs are configured, one BBU is added in the triple mode scenario, as shown in **Figure 3-28**.

Figure 3-28 Height-unrestricted triple-mode scenario (220 V AC)

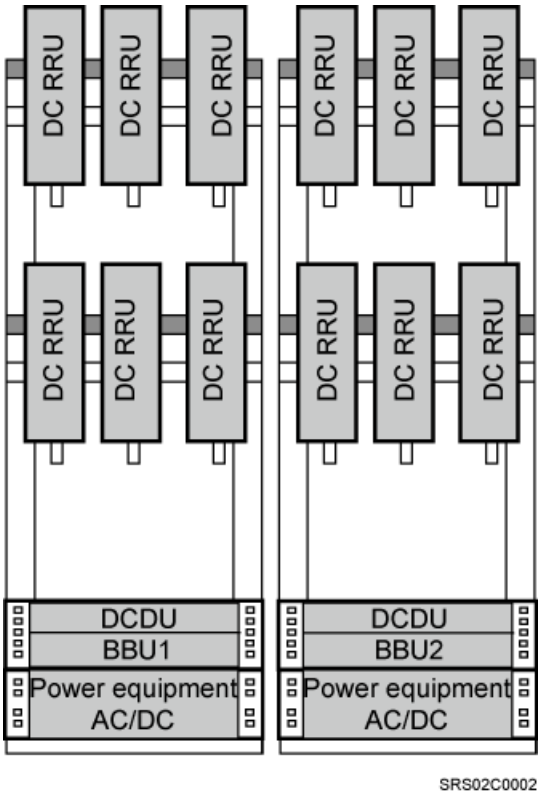

Table 3-32 Installation of six RRUs (in GSM+UMTS+LTE mode)

Position	GU+LTE	GL+UMTS
ICR1	Six RRU3908s	Six RRU3908s
ICR2	Six RRU3201s	Six RRU3804s

Huawei Proprietary and Confidential
Copyright © Huawei Technologies Co., Ltd.

Independent RRU installation scenario (IFS06+RRU)

- IFS06+RRU (DC RRU)

In this scenario, three RRUs or six RRUs are installed. The configurations and installations of the RRUs in the IFS06+RRU scenario and in the IFS06+IMB03+RRU scenario are the same. For details, see **RRU and IMB03 combination installation scenario (IFS06+IMB03 +RRU)**. **Figure 3-29** takes the installation of six RRUs as an example.

Figure 3-29 Installation of the DC RRUs on the IFS06

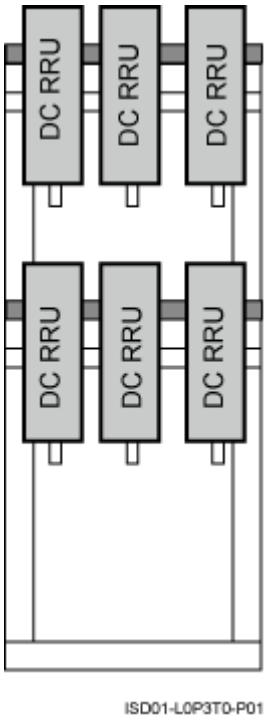

- IFS06+RRU (AC RRU)

Figure 3-30 shows the installation of AC RRUs on the IFS06.

NOTE

The description of the AC RRU in this document is based on the AC RRU3908.

Copyright © Huawei Technologies Co., Ltd.

Figure 3-30 Installation of AC RRUs on the IFS06

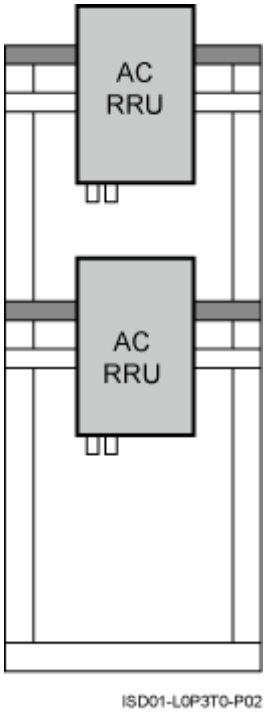

Height-Unrestricted Scenario (+24 V)

This section describes the +24 V height-unrestricted scenario. In this scenario, RRUs can be installed on the IFS06 with the IMB03 or on the IFS06 independently.

RRU and IMB03 combination installation scenario (IFS06+IMB03+RRU)

In this scenario, three RRUs, six RRUs, or 12 RRUs are installed.

- IFS06+IMB03+RRU (Three DC RRUs)

Huawei Proprietary and Confidential
Copyright © Huawei Technologies Co., Ltd.

Figure 3-31 Height-unrestricted scenario (+24 V DC)

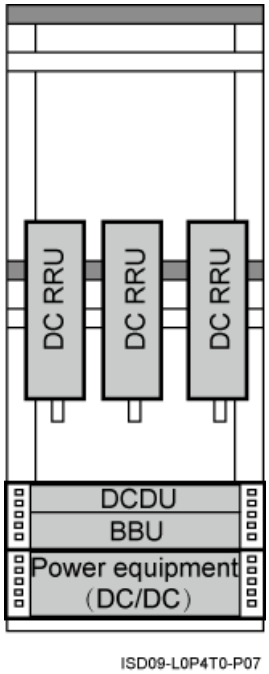

Table 3-33 Installation of three RRUs (on the lower part of the IFS06 by default)

Position	GSM Mode	UMTS Mode	LTE Mode	GSM+UMTS/ GSM+LTE
Lower part	Three RRU3008s, or three RRU3004s	Three RRU3804s, three RRU3801Es, three RRU3806s, three RRU3808s, or three RRU3805s	Three RRU3201s, three RRU3211s, three RRU3203s, three RRU3233s, three RRU3222s, or three RRU3232s	Three RRU3908s, or three RRU3920s

NOTE

The RRU3008, and RRU3004 support the GSM mode. The following description is based on the RRU3008.

The RRU3804, RRU3801E, RRU3806, RRU3808, and RRU3805 support the UMTS mode. The following description is based on the RRU3804.

The RRU3201, RRU3211, RRU3203, RRU3233, RRU3222, and RRU3232 support the LTE mode. The following description is based on the RRU3201.

The RRU3908 and RRU3920 support the multi-mode . The following description is based on the RRU3908.

- IFS06+IMB03+RRU (Six DC RRUs)

Copyright © Huawei Technologies Co., Ltd.

Figure 3-32 Height-unrestricted scenario (+24 V DC)

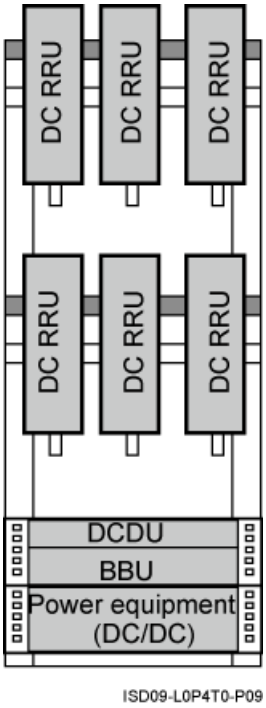

Table 3-34 Installation of 6 RRUs (in GSM+UMTS mode)

Position	GSM Mode	UMTS Mode	GSM +UMTS Mode	GSM +UMTS Hybrid Co-Cabinet	GSM +UMTS Co-Cabinet
Upper part	Three RRU3008s	Three RRU3804s	Three RRU3908s	Three RRU3908s	Three RRU3008s
Lower part	Three RRU3008s	Three RRU3804s	Three RRU3908s	Three RRU3804s	Three RRU3804s

Table 3-35 Installation of 6 RRUs (in GSM+LTE mode)

Position	GSM Mode	LTE Mode	GSM+LTE Hybrid Co-Cabinet	GSM+LTE Co-Cabinet
Upper part	Three RRU3008s	Three RRU3201s	Three RRU3908s	Three RRU3008s
Lower part	Three RRU3008s	Three RRU3201s	Three RRU3201s	Three RRU3201s

Huawei Proprietary and Confidential
Copyright © Huawei Technologies Co., Ltd.

Table 3-36 Installation of 6 RRUs (in UMTS+LTE mode)

Position	UMTS Mode	LTE Mode	UMTS+LTE Co-Cabinet
Upper part	Three RRU3804s	Three RRU3201s	Three RRU3804s
Lower part	Three RRU3804s	Three RRU3201s	Three RRU3201s

- IFS06+IMB03+RRU (12 DC RRUs)

Figure 3-33 Height-unrestricted scenario (+24 V DC)

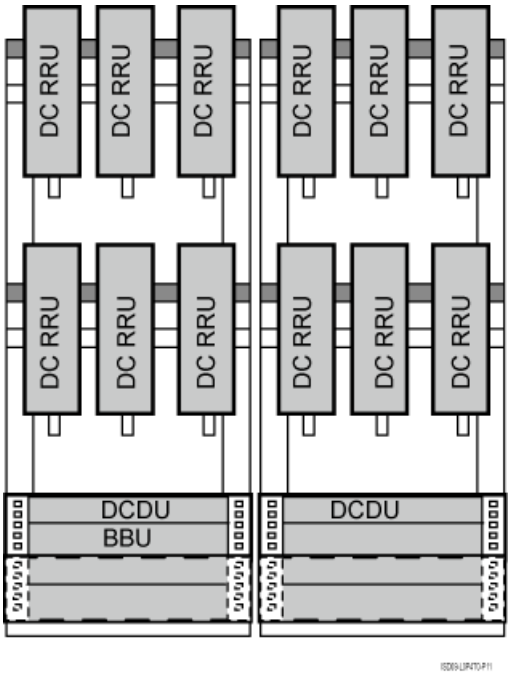

Table 3-37 Installation of 12 RRUs (in GSM+UMTS mode)

Position	GSM+UMTS Hybrid Co-Cabinet	GSM+UMTS Co-Cabinet
ICR1	Six RRU3908s	Six RRU3008s
ICR2	Six RRU3804s	Six RRU3804s

Table 3-38 Installation of 12 RRUs (in GSM+LTE mode)

Position	GSM+UMTS Hybrid Co-Cabinet	GSM+UMTS Co-Cabinet
ICR1	Six RRU3908s	Six RRU3008s
ICR2	Six RRU3201s	Six RRU3201s

Copyright © Huawei Technologies Co., Ltd.

Table 3-39 Installation of 12 RRUs (in UMTS+LTE mode)

Position	UMTS+LTE Co-Cabinet
ICR1	Six RRU3804s
ICR2	Six RRU3201s

NOTE

When 12 RRUs are configured, one BBU is added in the triple mode scenario, as shown in **Figure 3-34**.

Figure 3-34 Height-unrestricted triple-mode scenario (+24 V DC)

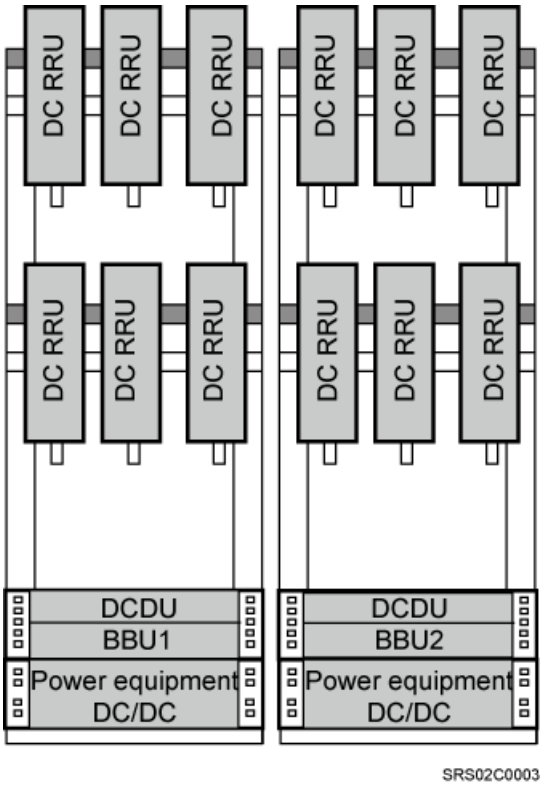

Table 3-40 Installation of 12 RRUs (in GSM+UMTS+LTE mode)

Position	GU+LTE	GL+UMTS
ICR1	Six RRU3908s	Six RRU3908s
ICR2	Six RRU3201s	Six RRU3804s

Independent RRU installation scenario (IFS06+RRU)

In this scenario, three RRUs or six RRUs are installed. The configurations and installations of the RRUs in the IFS06+RRU scenario and in the IFS06+IMB03+RRU scenario are the same.

Huawei Proprietary and Confidential
Copyright © Huawei Technologies Co., Ltd.

For details, see **RRU and IMB03 combination installation scenario (IFS06+IMB03 +RRU)**. **Figure 3-35** takes the installation of six RRUs as an example.

Figure 3-35 Installation of the DC RRUs on the IFS06

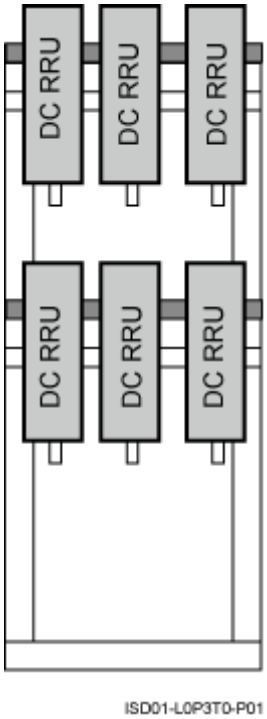

3.3 Dimensions and Installation Clearance Requirements

This section describes the dimensions and installation clearance requirements for the relevant devices.

Dimensions

Figure 3-36 shows the dimensions of the IFS06.

Copyright © Huawei Technologies Co., Ltd.

Figure 3-36 Dimensions of the IFS06

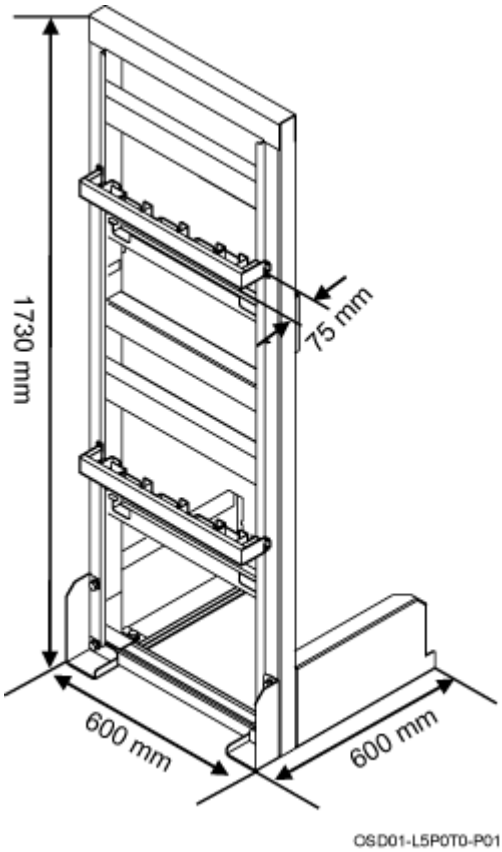

Figure 3-37 shows the dimensions of the IMB03.

Figure 3-37 Dimensions of the IMB03

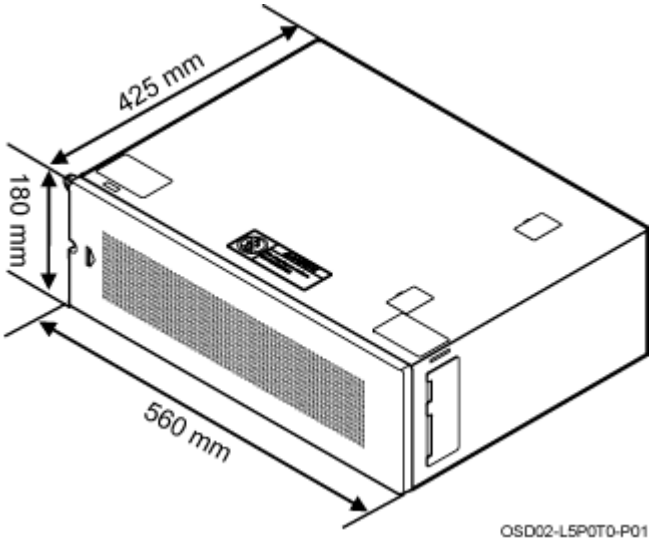

Recommended Clearance for the ICR (DC-RRU-Based)

Figure 3-38 shows the recommended clearance for installing the ICR where the DC RRU is installed.

Huawei Proprietary and Confidential
Copyright © Huawei Technologies Co., Ltd.

Figure 3-38 Recommended clearance for the ICR (DC-RRU-based)

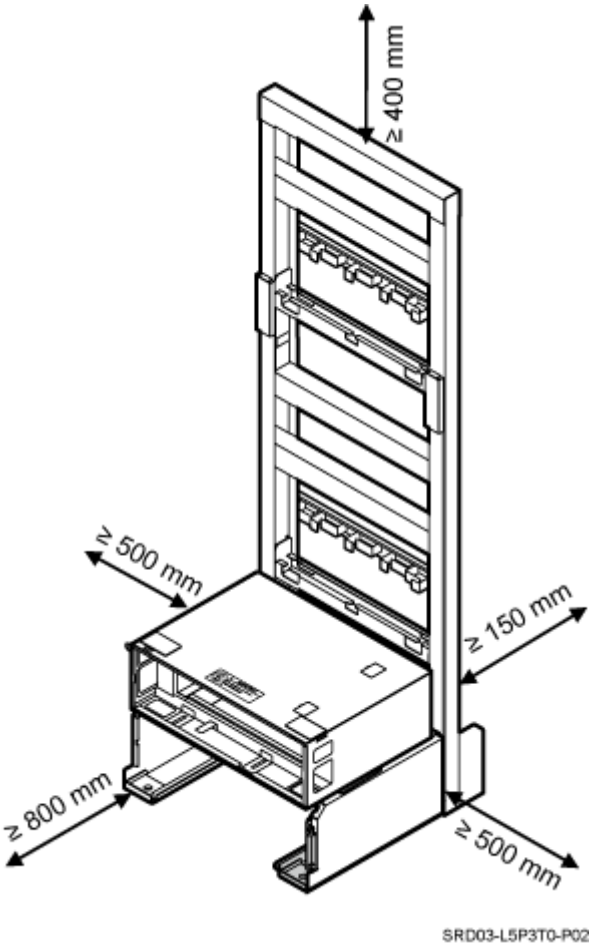

Recommended Clearance for the ICR (AC-RRU-Based)

Figure 3-39 shows the recommended clearance for installing the ICR where the AC RRU is installed.

Copyright © Huawei Technologies Co., Ltd.

Figure 3-39 Recommended clearance for the ICR (AC-RRU-based)

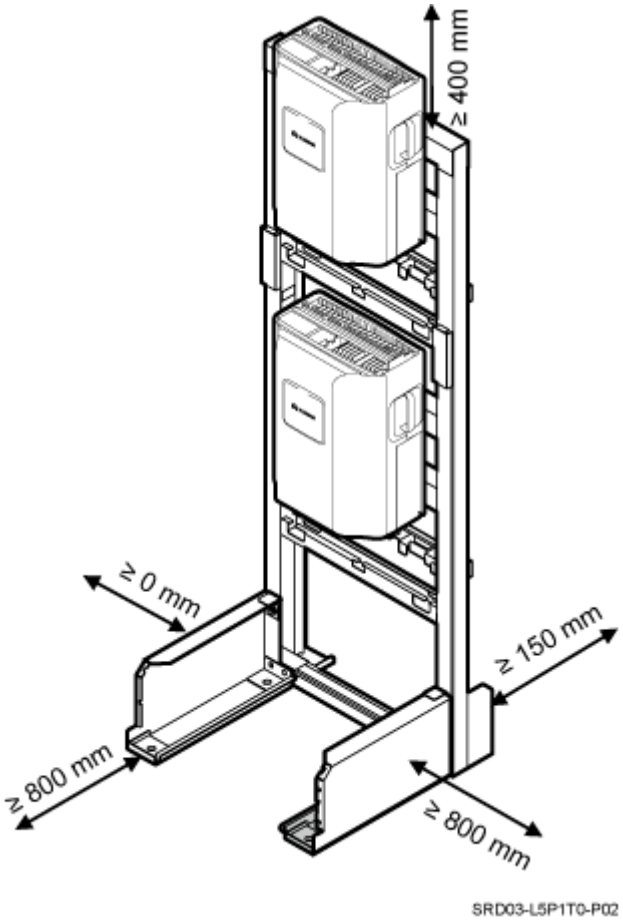

NOTE

When the recommended clearance is provided, the IFS06 where the AC RRU is installed can be installed with its left side against the wall.

Minimum Clearance for the ICR (DC-RRU-Based)

Figure 3-40 and **Figure 3-41** show the minimum clearance for installing the ICR where the DC RRU is installed.

Huawei Proprietary and Confidential
Copyright © Huawei Technologies Co., Ltd.

Figure 3-40 Minimum clearance for the ICR in the height-unrestricted scenario

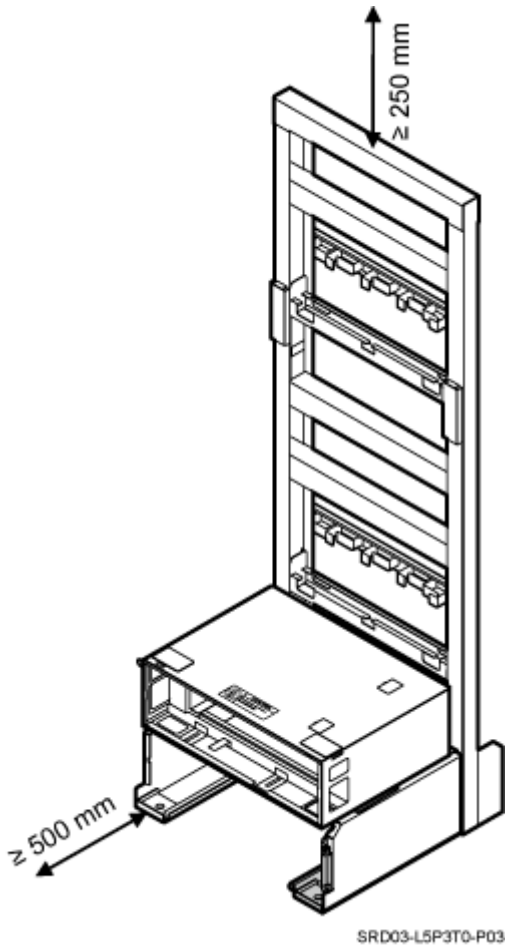

Copyright © Huawei Technologies Co., Ltd.

Figure 3-41 Minimum clearance for the ICR in the height-restricted scenario

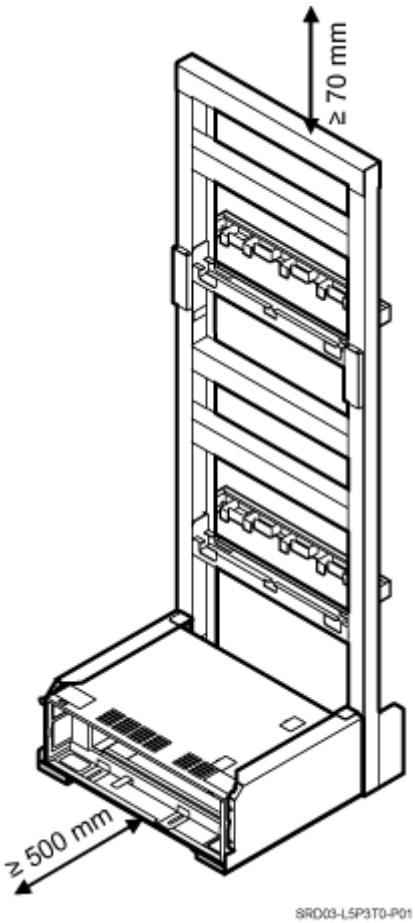

NOTE

When the minimum clearance is provided, the IFS06 where the DC RRU is installed can be installed with its back and both sides against the wall.

Minimum Clearance for the ICR (AC-RRU-Based)

Figure 3-42 shows the minimum clearance for the installing the ICR where the AC RRU is installed.

Huawei Proprietary and Confidential
Copyright © Huawei Technologies Co., Ltd.

Figure 3-42 Minimum clearance for the ICR (AC-RRU-based)

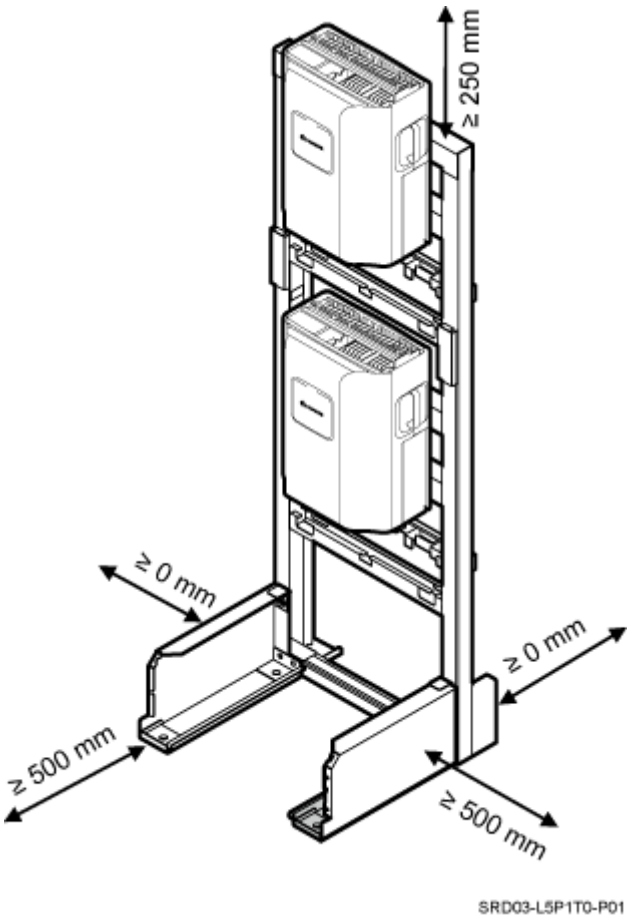

NOTE

When the minimum clearance is provided, the IFS06 where the AC RRU is installed can be installed with its back and left side against the wall.

Clearance Requirements for Combined Cabinets

Figure 3-43 shows the clearance requirements for combined cabinets.

Copyright © Huawei Technologies Co., Ltd.

Figure 3-43 Clearance requirements for combined cabinets

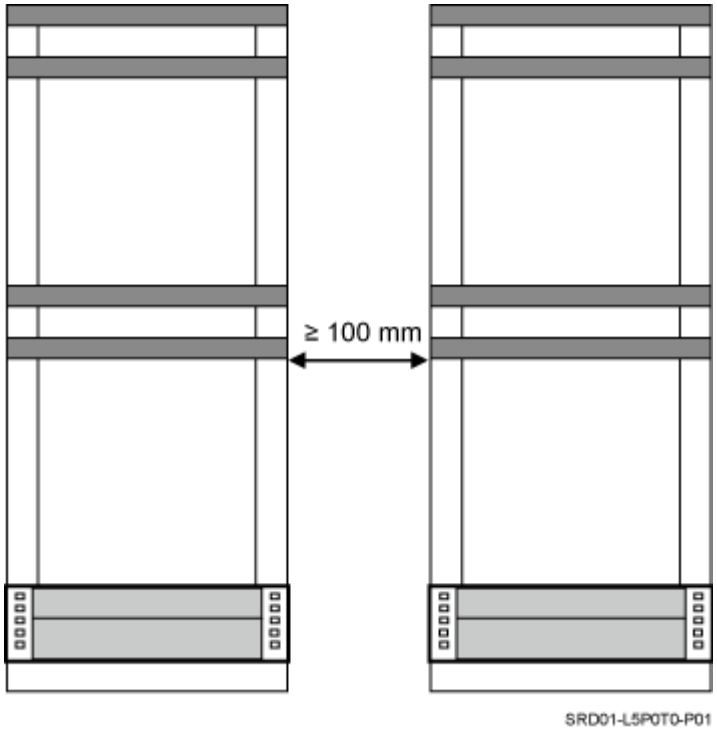

Huawei Proprietary and Confidential
Copyright © Huawei Technologies Co., Ltd.

4 Unpacking the Equipment

Unpack and check the delivered equipment to ensure that all the materials are included and intact.

Context

NOTE

When transporting, moving, or installing the equipment, components, or parts, you must:

- Prevent them from colliding with doors, walls, shelves, or other objects.
- Wear clean gloves, and avoid touching the equipment, components, or parts with bare hands, sweat-soaked gloves, or dirty gloves.

Procedure

Step 1 Check the total number of articles in each case according to the packing list.

If ...	Then ...
The total number tallies with the packing list	Go to **Step 2**.
The total number does not tally with the packing list	Find out the cause and report any missing articles to the local Huawei office.

Step 2 Check the exterior of the packing case.

If ...	Then ...
The outer packing is intact	Go to **Step 3**.
The outer packing is severely damaged or soaked	Find out the cause and report it to the local Huawei office.

Step 3 Check the type and quantity of the equipment in the cases according to the packing list.

Copyright © Huawei Technologies Co., Ltd.

If ...	Then ...
Types and quantity of the article tally with those on the packing list	Sign the *Packing List* with the customer.
There is any shipment shortage or wrong shipment	Fill in and submit the *Cargo Shortage and Mishandling Report*.
Articles are damaged.	Fill in and submit the *Article Replacement Report*.

WARNING

To protect the equipment and prevent damage to the equipment, you are advised to keep the unpacked equipment and packing materials indoors, take photos of the stocking environment, packing case or carton, packing materials, and any rusted or eroded equipment, and then file the photos.

----End

Huawei Proprietary and Confidential
Copyright © Huawei Technologies Co., Ltd.

5 Obtaining the ESN

The Electronic Serial Number (ESN) is a unique identifier of a Network Element (NE). Record the ESN for later commissioning of the base station before installation.

Procedure

Step 1 Record the ESN on the BBU.

- If there is not a label on the FAN unit of the BBU, you must record the ESN and site information that is printed on a mounting ear of the BBU. **Figure 5-1** shows the position of the ESN.
- If there is a label on the FAN unit of the BBU, the ESN is printed on the label and a mounting ear of the BBU. In this case, you must take the label and record the site information on the side labeled Site, as shown in **Figure 5-2**.

Figure 5-1 Obtaining the ESN (1)

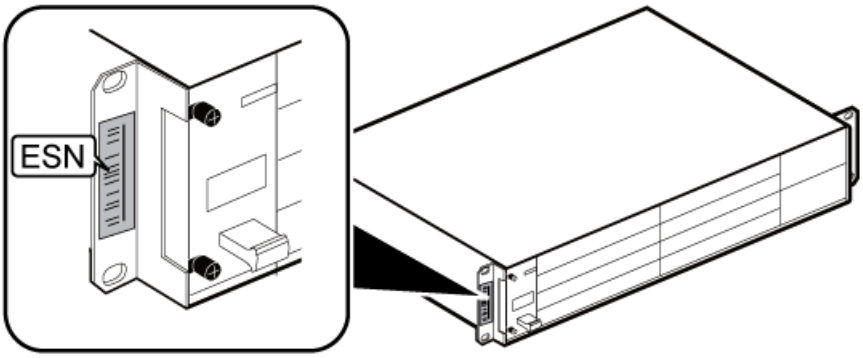

Copyright © Huawei Technologies Co., Ltd.

Figure 5-2 Obtaining the ESN (2)

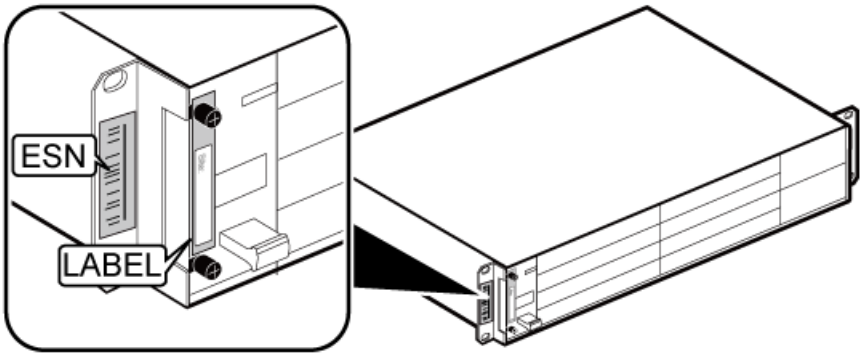

Step 2 Report the ESN to the engineer for the commissioning of the base station.

----End

Huawei Proprietary and Confidential
Copyright © Huawei Technologies Co., Ltd.

6 Installation Process

This section describes the process of installing the DBS39000 on the ICR.

Figure 6-1 shows the installation process.

Copyright © Huawei Technologies Co., Ltd.

Figure 6-1 Installation process

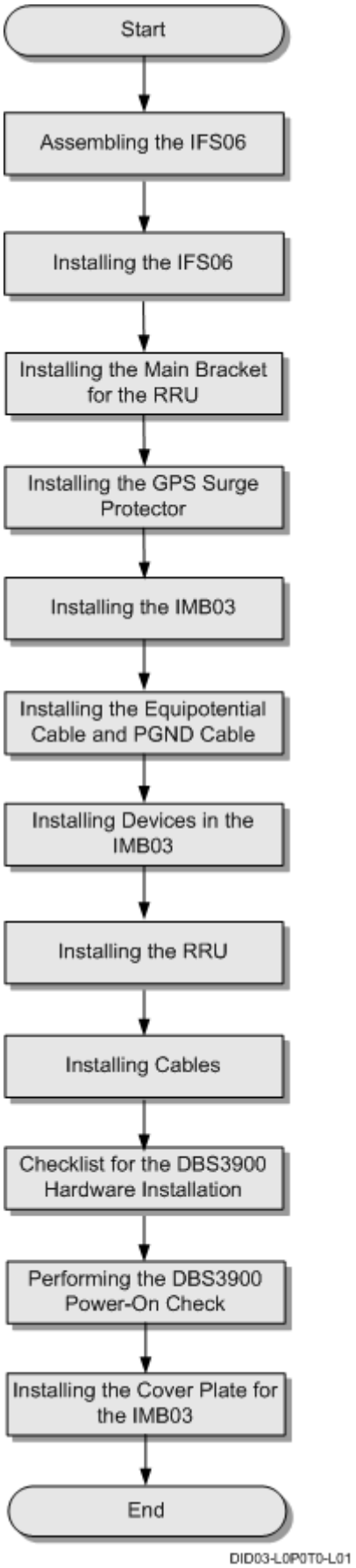

Huawei Proprietary and Confidential
Copyright © Huawei Technologies Co., Ltd.

7 Assembling the IFS06

This chapter describes the procedure for assembling the IFS06.

Procedure

Step 1 Use four M12x30 bolt assemblies to secure the rear feet to the main frame, as shown in **Figure 7-1**.

NOTE

Place the foam pad or cardboard under the IFS06 to prevent any damage to the paint.

Figure 7-1 Installing the rear feet

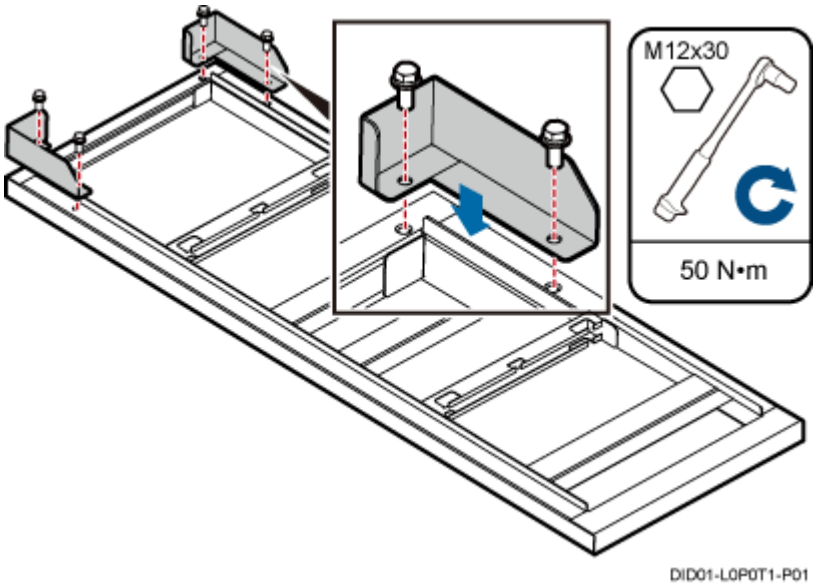

Step 2 Rotate the IFS06 by 180°, and then use six M12x30 bolt assemblies to secure the front feet to the main frame, as shown in **Figure 7-2**.

Copyright © Huawei Technologies Co., Ltd.

Figure 7-2 Installing the front feet

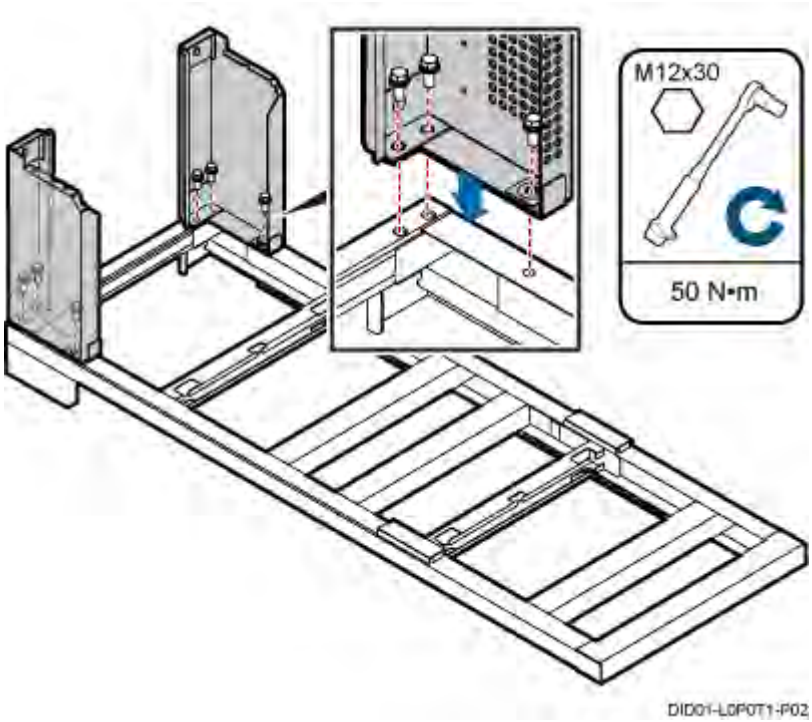

Step 3 Move down the adjustable beam from the 2 m high position to the 1.8 m high position, as shown in **Figure 7-3**.

NOTE

In the height-restricted scenario, move the adjustable beam to the 1.8 m high position. In the height-unrestricted scenario, skip the step.

Huawei Proprietary and Confidential
Copyright © Huawei Technologies Co., Ltd.

Figure 7-3 Moving down the adjustable beam

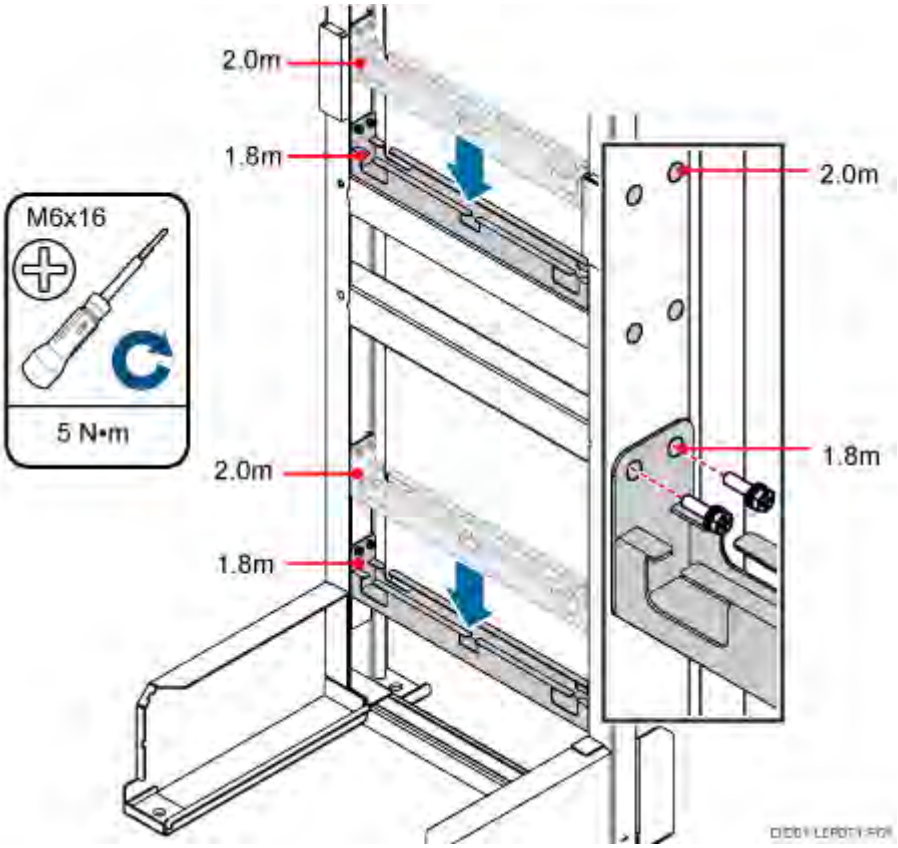

Step 4 Fit the tabs of the cable rack into the corresponding slots on the columns of the IFS06, as shown in **Figure 7-4**.

Copyright © Huawei Technologies Co., Ltd.

Figure 7-4 Installing the cable rack

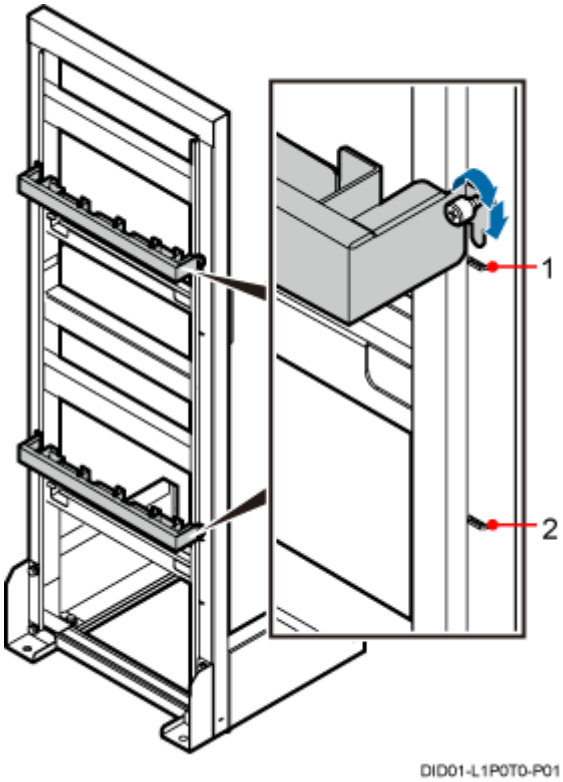

(1) Slot for installing the cable rack in the height-unrestricted scenario

(2) Slot for installing the cable rack in the height-restricted scenario

NOTE

In the height-unrestricted scenario, fit the tabs of the cable rack into the slots for the height-unrestricted scenario. In the height-restricted scenario, fit the tabs of the cable rack into the slots for the height-restricted scenario.

Step 5 Install the adapting piece for the GPS surge protector to the upper adjustable beam, as shown in **Figure 7-5**.

Huawei Proprietary and Confidential
Copyright © Huawei Technologies Co., Ltd.

Figure 7-5 Installing the adapting piece for the GPS surge protector

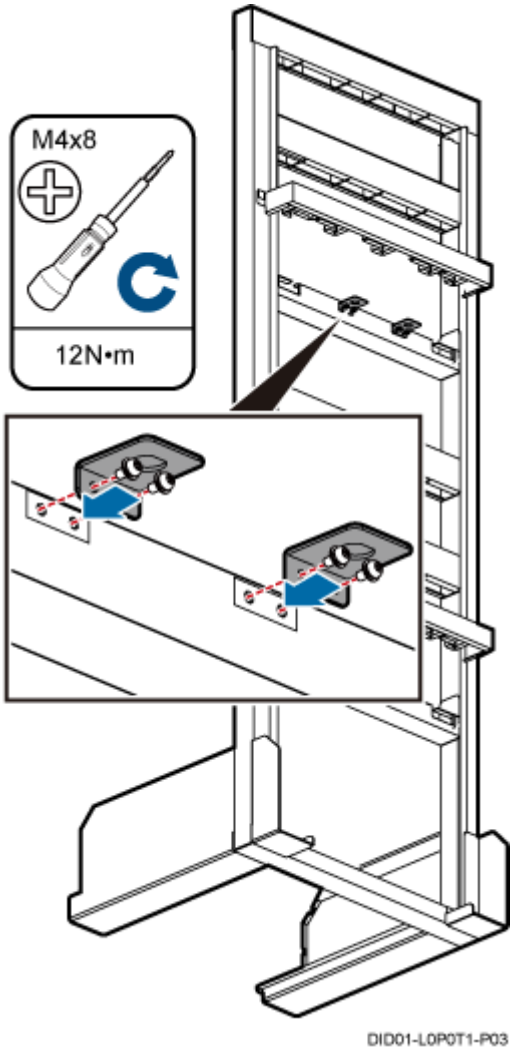

----End

Copyright © Huawei Technologies Co., Ltd.

8 Installing the IFS06

About This Chapter

This chapter describes the procedure for installing the IFS06 on the concrete floor and ESD floor.

8.1 Installing the IFS06 on the Concrete Floor
This section describes the procedure for installing the IFS06 on the concrete floor.

8.2 Installing the IFS06 on the ESD Floor
This section describes the procedure for installing the IFS06 on the ESD floor.

Copyright © Huawei Technologies Co., Ltd.

8.1 Installing the IFS06 on the Concrete Floor

This section describes the procedure for installing the IFS06 on the concrete floor.

Procedure

Step 1 Place the marking template on the horizontal floor, and then use a marker to mark four anchor points, as shown in **Figure 8-1**.

Figure 8-1 Marking anchor points

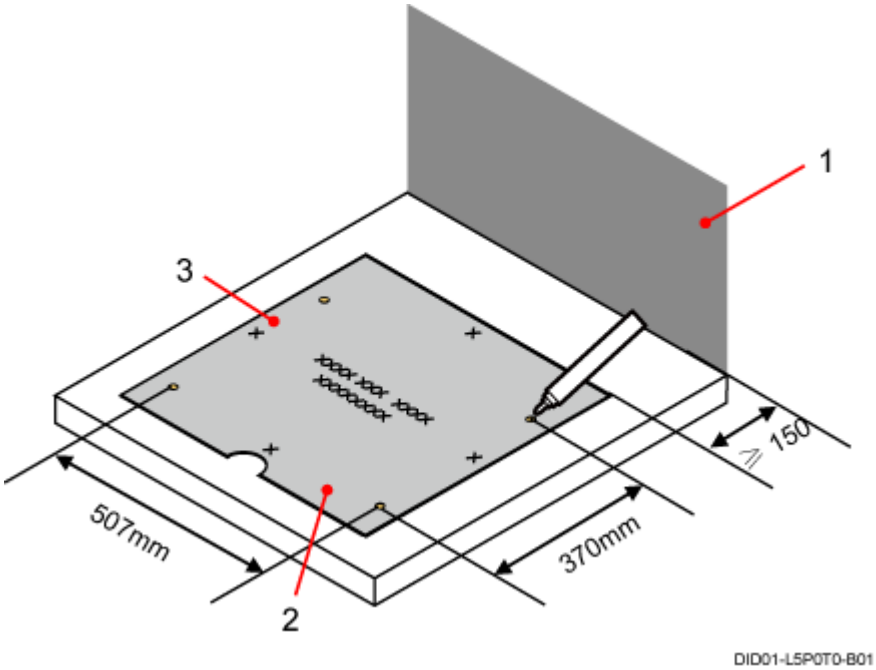

(1) Wall (2) Front (3) Left

Step 2 Drill holes at the anchor points and install the expansion bolt assemblies.

1. Use a hammer drill with bit 16 to drill holes at the marked anchor points. Ensure that the depth of each hole ranges from 52 mm to 60 mm, as shown in **Figure 8-2**.

   Use a vacuum cleaner to clear the dust inside and around the holes. If the inter-hole spacing is too wide or too narrow, locate and drill holes again.

Huawei Proprietary and Confidential
Copyright © Huawei Technologies Co., Ltd.

Figure 8-2 Drilling holes

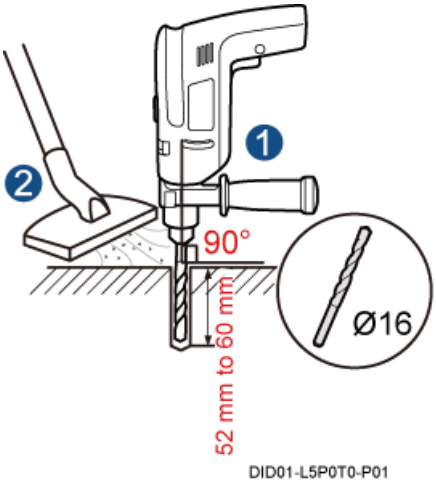

CAUTION

Take proper safety measures before drilling holes to protect your eyes and respiratory tract against the dust.

2. Assemble the expansion bolt assembly by referring to **Figure 8-3**, slightly tighten the expansion bolt, and then insert it into the hole vertically.

Figure 8-3 Assembling an expansion bolt

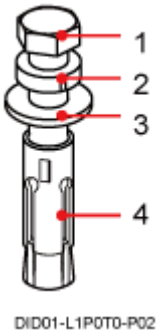

(1) M12x60 bolt (2) Spring washer 12 (3) Flat washer 12 (4) Expansion tube

3. Use a rubber mallet to hammer the expansion bolt until the expansion tube is buried into the hole, and then use a torque wrench to tighten the M12x60 bolt until the tightening torque reaches 45 N·m, as shown in **Figure 8-4**.

Copyright © Huawei Technologies Co., Ltd.

Figure 8-4 Installing an expansion bolt

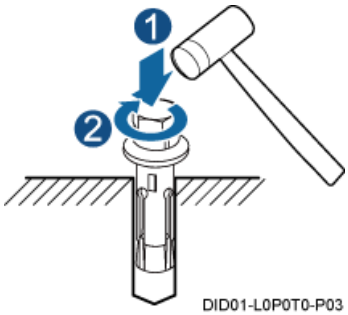

4. Remove the M12x60 bolt, spring washer, and flat washer from each expansion bolt assembly in sequence, as shown in **Figure 8-5**.

Figure 8-5 Removing a bolt

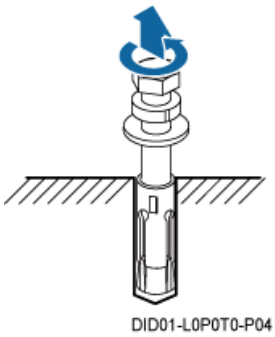

Step 3 Install the bolts in the corresponding mounting holes on the IFS06, as shown in **Figure 8-6**.

Figure 8-6 Installing the bolts

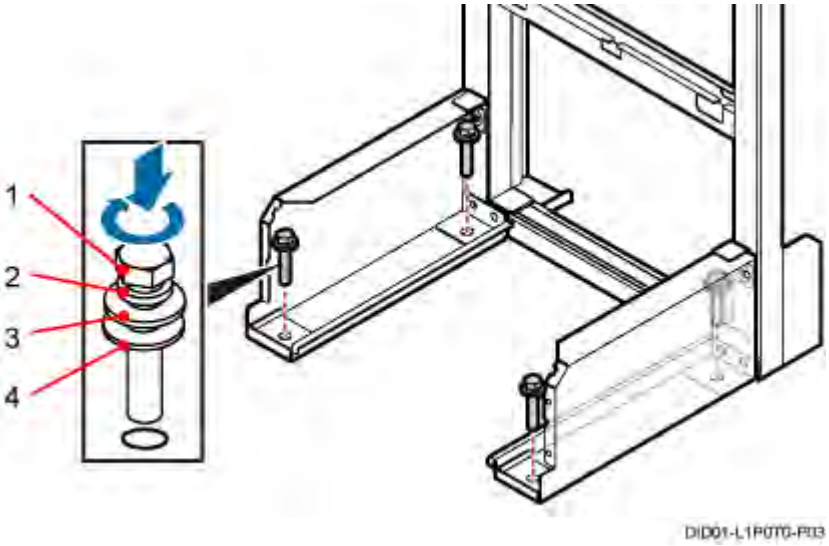

(1) M12x60 bolt (2) Spring washer (3) Flat washer (4) Insulation washer

1. Place the IFS06 in the position for installation, and then align the mounting holes on the IFS06 with the anchor points on the floor.

Huawei Proprietary and Confidential
Copyright © Huawei Technologies Co., Ltd.

2. Lead each bolt through the spring washer, flat washer, and insulation washer in sequence, and then install the bolt in the mounting hole on the IFS06.
3. Install the bolt into the expansion tube.

Step 4 Use a level to check whether the feet of the IFS06 are on a horizontal plane. If not, add adjusting pads to ensure that the feet of the IFS06 are on a horizontal plane.

1. Pre-tighten the bolts, as shown in **Figure 8-7**.

Figure 8-7 Pre-tightening the bolts

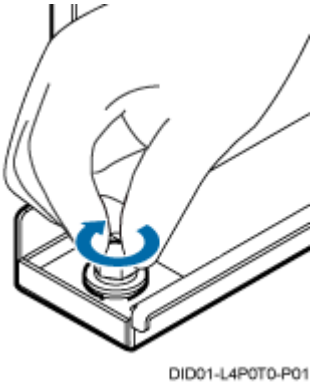

2. Use a level to check whether the feet and bottom beam of the IFS06 are on a horizontal plane, as shown in **Figure 8-8**.

Figure 8-8 Checking and adjusting the level of the IFS06

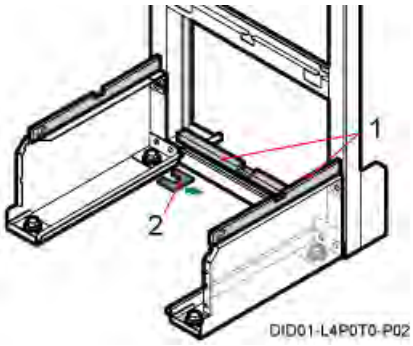

(1) Level (2) Adjusting pad

3. Add adjusting pads to ensure that the feet and bottom beam of the IFS06 are on a horizontal plane, as shown in **Figure 8-8**.

NOTE

The adjusting pads must be added at the expansion bolt assemblies.

4. Tightening the bolts using a socket wrench, as shown in **Figure 8-9**.

Copyright © Huawei Technologies Co., Ltd.

Figure 8-9 Tightening the bolts

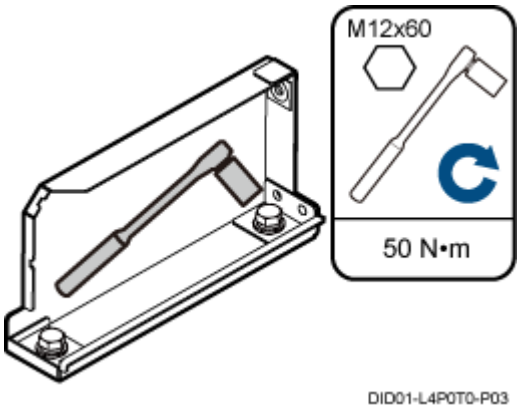

----End

8.2 Installing the IFS06 on the ESD Floor

This section describes the procedure for installing the IFS06 on the ESD floor.

Context

Figure 8-10 shows the support for installing the ESD floor, which is classified into support with adjustable height (I) and support with fixed height (II). The installation process of two supports is the same, and the following descriptions are based on the support with adjustable height (I).

Figure 8-10 Support for installing the ESD floor

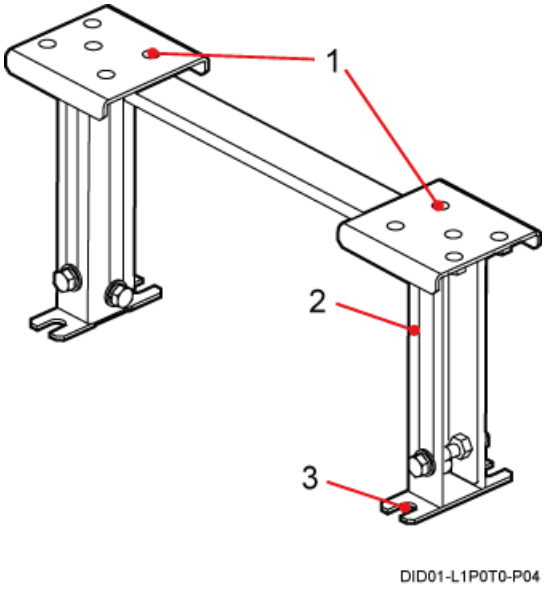

(1) Mounting holes for the ESD floor (2) Support (3) Mounting hole for the concrete floor

The height of an ESD floor refers to the spacing between the concrete floor and the upper surface of the ESD floor.

Huawei Proprietary and Confidential
Copyright © Huawei Technologies Co., Ltd.

Type	Height of the ESD Floor
I	296 mm to 495 mm
II	At least 120 mm, depending on the actual floor height

Procedure

Step 1 Place the marking template on the ESD floor, and then use a marker to mark four anchor points, as shown in **Figure 8-11**.

Figure 8-11 Marking anchor points

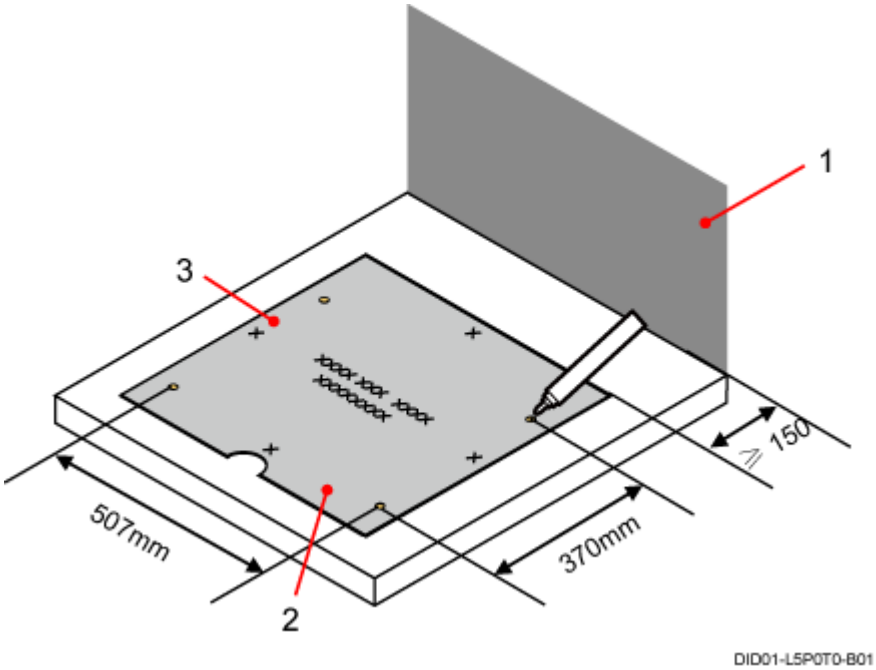

(1) Wall (2) Front (3) Left

Step 2 Drill holes on the ESD floor, as shown in **Figure 8-12**. Ensure that the hammer drill penetrates the ESD floor.

Use a vacuum cleaner to clear the dust inside and around the holes. If the inter-hole spacing is too wide or too narrow, locate and drill holes again.

Copyright © Huawei Technologies Co., Ltd.

Figure 8-12 Drilling holes

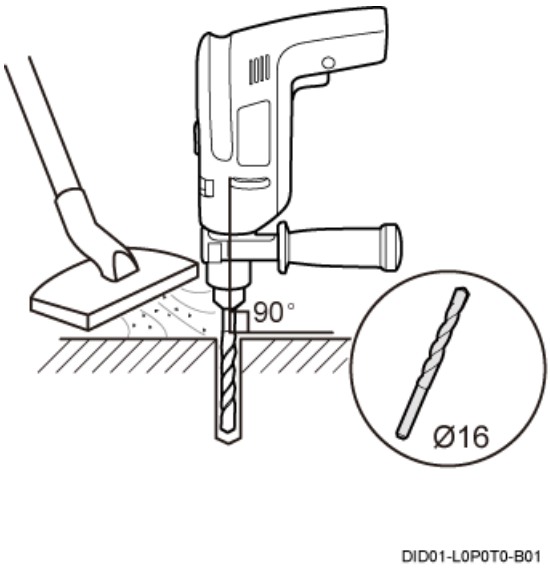

CAUTION

Take proper safety measures before drilling holes to protect your eyes and respiratory tract against the dust.

Step 3 Install the support for installing the ESD floor, as shown in **Figure 8-13**.

Figure 8-13 Installing the support

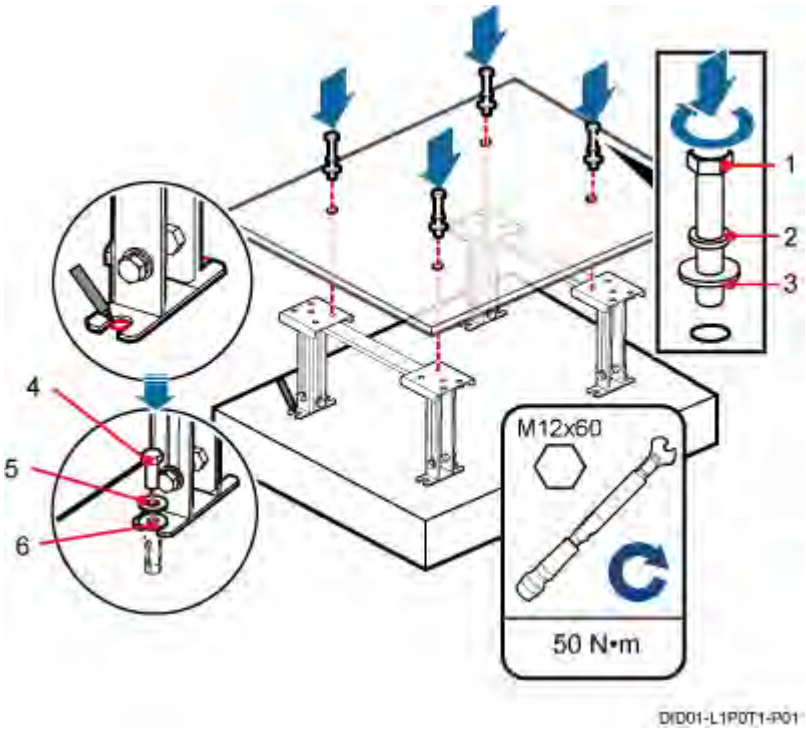

(1) M12x70 bolt (2, 5) Spring washer 12 (3,6) Flat washer 12 (4) M12x60 bolt

Huawei Proprietary and Confidential
Copyright © Huawei Technologies Co., Ltd.

1. Mark the positions of the mounting hole for the concrete floor on the concrete floor, drill holes in the positions, and then install the expansion bolt assemblies.
2. Place the support under the ESD floor, and then use M12x70 bolts to temporarily secure the support.

   NOTE

   The height locking bolts are delivered with the support for installing the ESD floor.

   When tightening the height locking bolts, you should tighten the bolts in the middle before tightening the bolts on both sides.

Step 4 Remove the bolts that you use in **Step 3** to temporarily secure the support for installing the ESD floor, as shown in **Figure 8-14**.

Figure 8-14 Removing the bolts

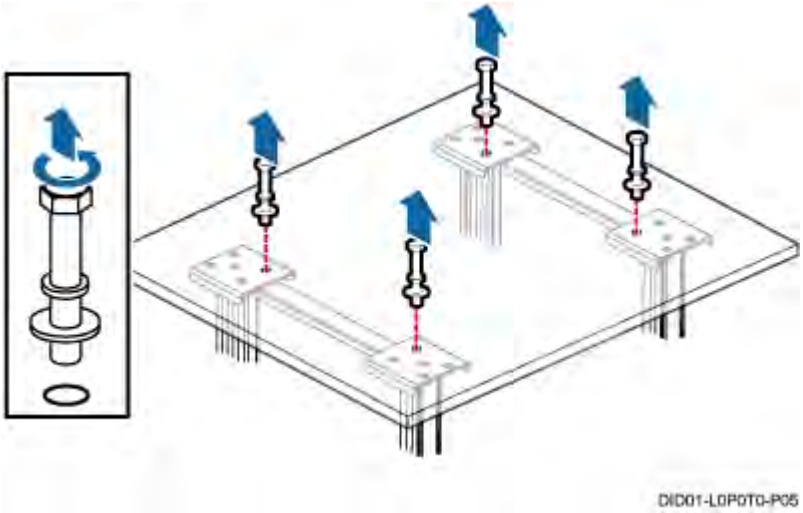

Step 5 Install the IFS06 on the ESD Floor, as shown in **Figure 8-15**.

Copyright © Huawei Technologies Co., Ltd.

Figure 8-15 Install the IFS06.

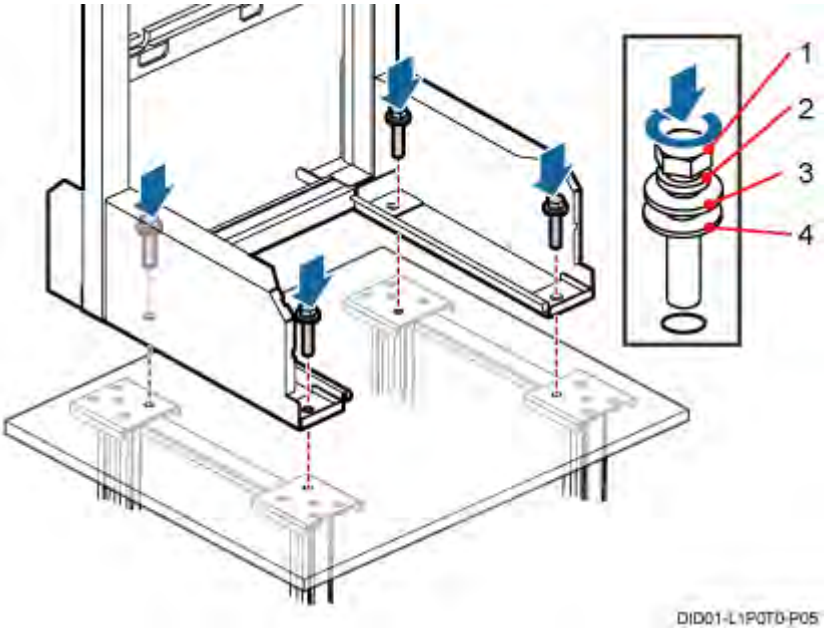

(1) M12x70 bolt (2) Spring washer (3) Flat washer (4) Insulating washer

Step 6 Use a level to check whether the feet of the ICR are on a horizontal plane. If not, add adjusting pads to ensure that the feet of the ICR are on a horizontal plane.

1. Pre-tighten the bolts, as shown in **Figure 8-16**.

Figure 8-16 Pre-tightening the bolts

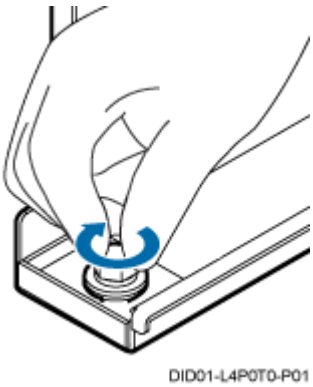

2. Use a level to check whether the feet and bottom beam of the ICR are on a horizontal plane, as shown in **Figure 8-17**.

Huawei Proprietary and Confidential
Copyright © Huawei Technologies Co., Ltd.

Figure 8-17 Checking and adjusting the level of the ICR

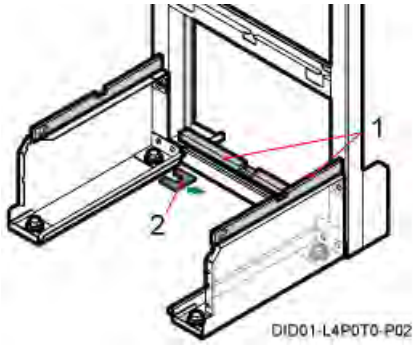

(1) Level (2) Adjusting pad

3. Add adjusting pads to ensure that the feet and bottom beam of the ICR are on a horizontal plane, as shown in **Figure 8-17**.

NOTE

The adjusting pads should be added at the expansion bolt assemblies.

4. Tightening the bolts using a socket wrench, as shown in **Figure 8-18**.

Figure 8-18 Tightening the bolts

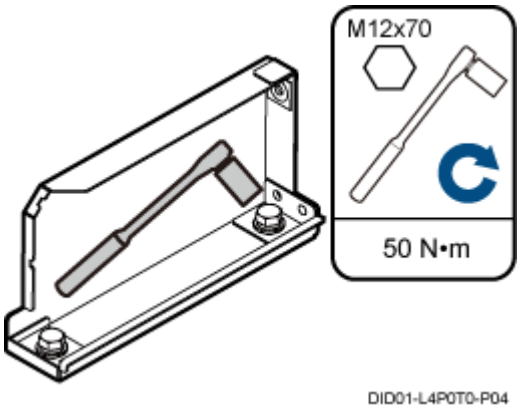

----End

Copyright © Huawei Technologies Co., Ltd.

9 Installing the Main Bracket for the RRU

About This Chapter

This chapter describes the procedure for installing the main bracket for the DC RRU and AC RRU.

Context

Figure 9-1 shows the main and auxiliary brackets for the RRU.

Figure 9-1 Main and auxiliary brackets for the RRU

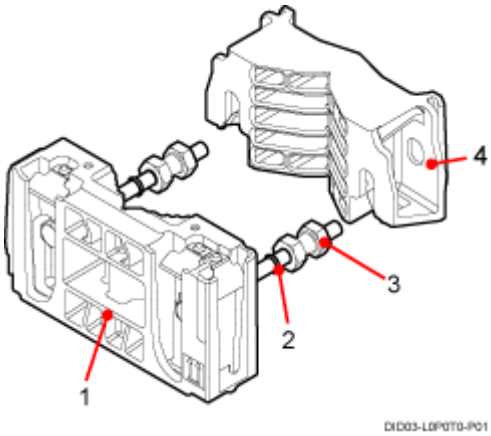

(1) Main bracket (2) Rubber washer (3) Dual-nut bolt (4) Auxiliary bracket

NOTE

If the RRU needs to be installed on the IFS06, only the main bracket is required.

Copyright © Huawei Technologies Co., Ltd.

9.1 Installing the Main Bracket for the DC RRU

This section describes the procedure for installing the main bracket for the DC RRU.

Context

NOTE

- Install RRUs in the sequence from bottom to top and from left to right.
- The contact pieces on the main bracket are locked before RRUs are installed.
- Rubber washers are easily pressed or broken.
- If the installation clearance is limited, the RRU must be first installed on the side where there is the least space.

Procedure

- Height-unrestricted scenario

  Install the main bracket in the height-unrestricted scenario, as shown in **Figure 9-2**. For details about how to install the main bracket, see the labels on the IFS06.

  Figure 9-2 Installing the main bracket in the height-unrestricted scenario

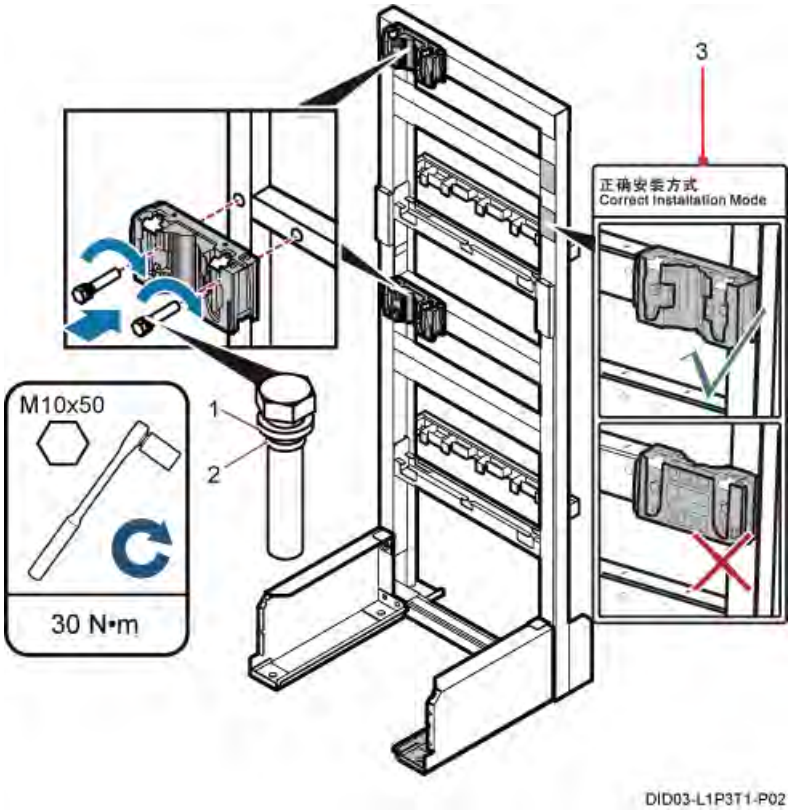

(1) Spring washer (2) Rubber washer (3) Label

- Height-restricted scenario

  Install the main bracket in the height-restricted scenario, as shown in **Figure 9-3**. For details about how to install the main bracket, see the labels on the IFS06.

Copyright © Huawei Technologies Co., Ltd.

NOTE

Before installing the main bracket in the height-restricted scenario, you must use a finger to push the rubber cap out.

Figure 9-3 Installing the main bracket in the height-restricted scenario

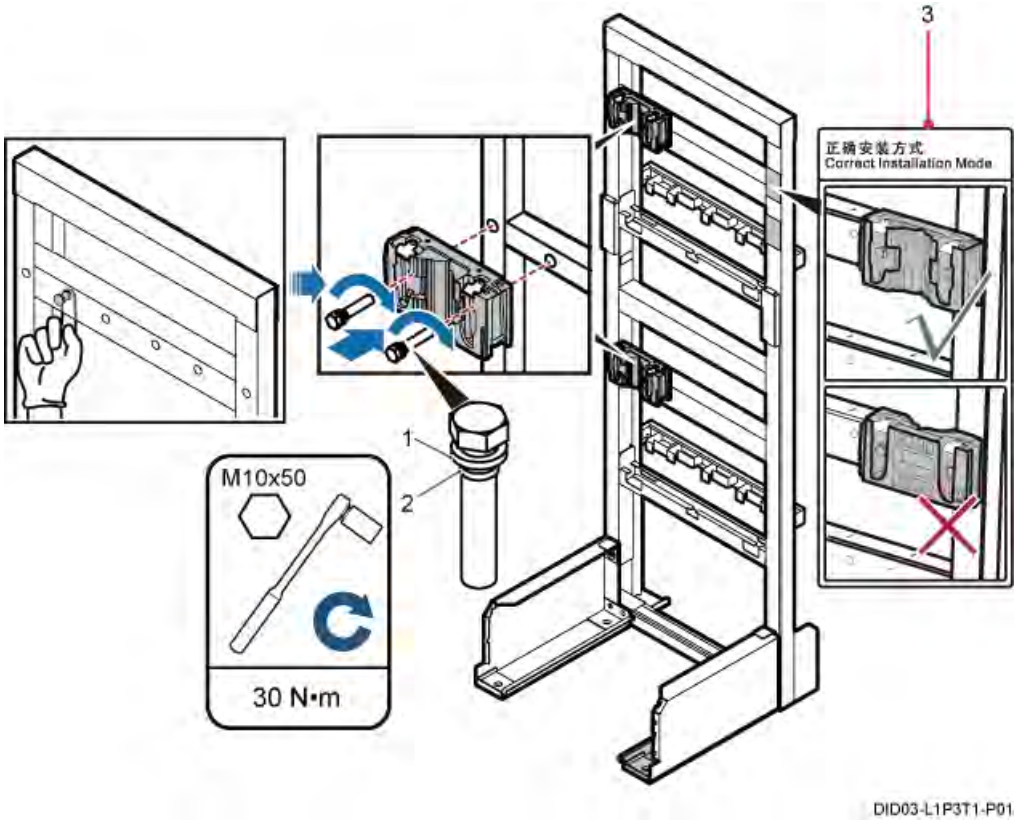

(1) Spring washer (2) Rubber washer (3) Label

----End

9.2 Installing the Main Bracket for the AC RRU

This section describes the procedure for installing the main bracket for the AC RRU.

Context

NOTE

- Install RRUs in the sequence from bottom to top and from left to right.
- The contact pieces on the main bracket are locked before RRUs are installed.
- Rubber washers are easily pressed or broken.
- If the installation clearance is limited, the RRU must be first installed on the side where there is the least space.

Procedure

- Height-unrestricted scenario

Copyright © Huawei Technologies Co., Ltd.

Install the main bracket in the middle of the bean 1 and the bean 2 respectively in the height-unrestricted scenario, as shown in **Figure 9-4**. For details about how to install the main bracket, see the labels on the IFS06.

Figure 9-4 Installing the main bracket in the height-unrestricted scenario

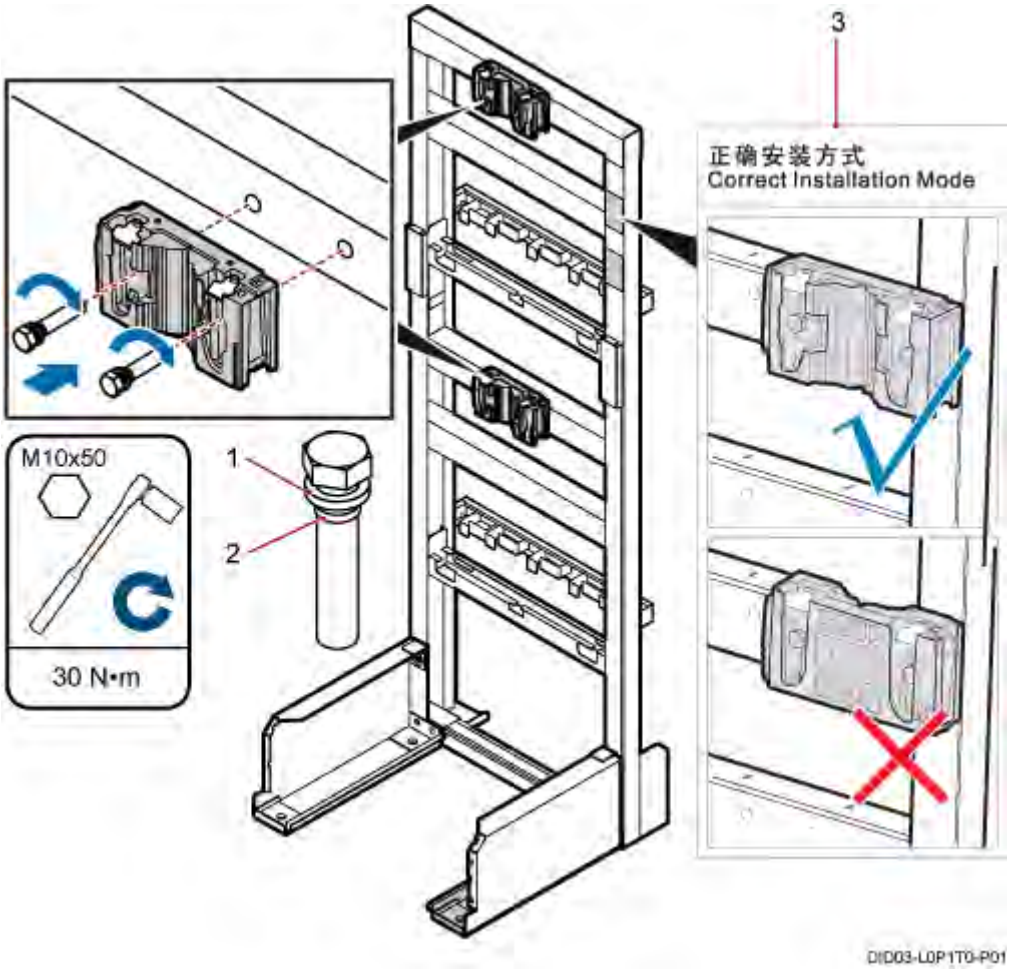

(1) Spring washer (2) Rubber washer (3) Label

- Height-restricted scenario

  Install the main bracket in the middle of the bean 1 and the bean 2 in the height-restricted scenario, as shown in **Figure 9-5**. For details about how to install the main bracket, see the labels on the IFS06.

Copyright © Huawei Technologies Co., Ltd.

Figure 9-5 Installing the main bracket in the height-restricted scenario

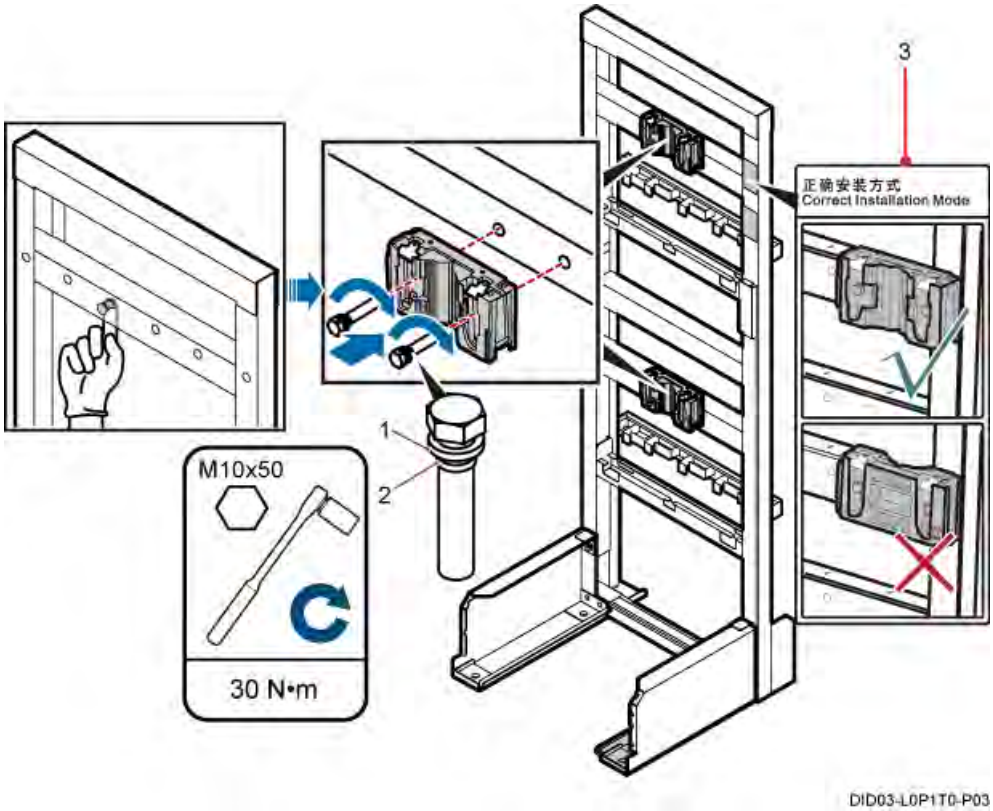

(1) Spring washer (2) Rubber washer (3) Label

----End

Copyright © Huawei Technologies Co., Ltd.

10 Installing the GPS Surge Protector

This chapter describes the procedure for installing the GPS surge protector.

Context

Two types of GPS surge protector can be installed on the IFS06, as shown in **Figure 10-1**.

Figure 10-1 GPS surge protector

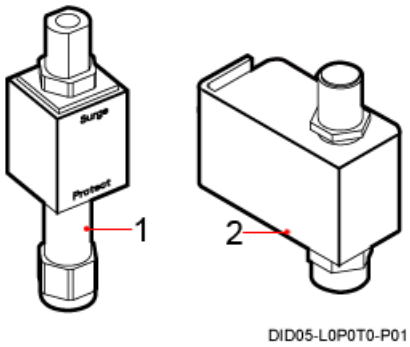

(1) GPS surge protector A (2) GPS surge protector B

NOTE

The IFS06 can be installed with one or two GPS surge protector, which should be decided according to the actual scenario.

GPS surge protector does not need a PGND cable.

Procedure

Step 1 Remove the insert nut and toothed washer from the connector of the GPS clock signal cable, as shown in **Figure 10-2**.

Copyright © Huawei Technologies Co., Ltd.

Figure 10-2 Removing the insert nut and toothed washer

Step 2 Fix the connector to the adapting piece, as shown in **Figure 10-3**.

Figure 10-3 Installing the connector

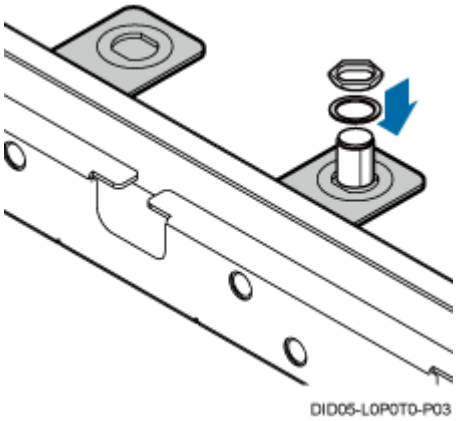

Step 3 Install the GPS surge protector on the connector, as shown in **Figure 10-4**.

Figure 10-4 Installing the GPS surge protector

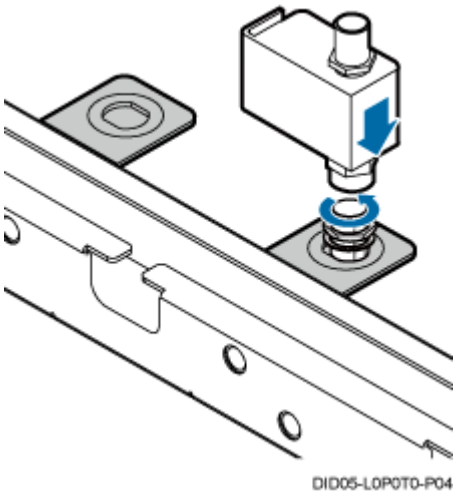

NOTE

When installing the GPS surge protector, pre-tighten it with hands, and then use a wrench to tighten it.

Step 4 Install the PGND cable for the GPS surge protector, as shown in **Figure 10-5**.

Huawei Proprietary and Confidential
Copyright © Huawei Technologies Co., Ltd.

Figure 10-5 Installing the PGND cable for the GPS surge protector

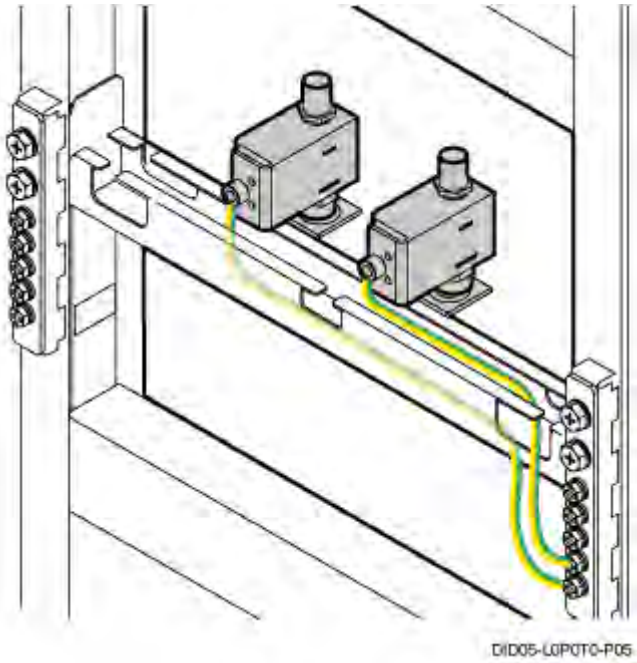

Step 5 Route cables by referring to **15.1 Cabling Requirements**.

Step 6 Use cable ties to bind cables.

Step 7 Label the installed cables by referring to Attaching a Sign Plate Label.

----End

Copyright © Huawei Technologies Co., Ltd.

11 Installing the IMB03

About This Chapter

This chapter describes the procedure for installing the IMB03.

11.1 Installing the IMB03 on the Upper Level Separately
This section describes the procedure for installing the IMB03 on the upper level separately.

11.2 Installing the IMB03 on the Lower Level Separately
This section describes the procedure for installing the IMB03 on the lower level separately.

11.3 Installing the IMB03s on the Upper and Lower Levels
This section describes the procedure for installing the IMB03s on the upper and lower levels.

Copyright © Huawei Technologies Co., Ltd.

11.1 Installing the IMB03 on the Upper Level Separately

This section describes the procedure for installing the IMB03 on the upper level separately.

Context

NOTE

In this scenario, only the IMB03 on the upper level needs to be installed.

Procedure

Step 1 Remove the two protection plates from the top of the IMB03, as shown in **Figure 11-1**.

Figure 11-1 Removing the protection plates

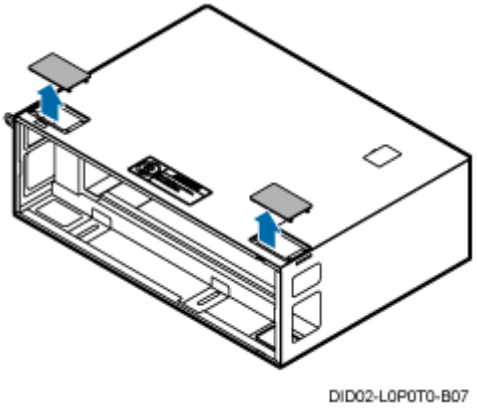

NOTE

After all the cables are routed, cut parts of the protection plates and use the cut parts to seal the cable holes if there is spare space in the cable holes.

Step 2 Install mounting ears horizontally on the IMB03, as shown in **Figure 11-2**.

Figure 11-2 Installing mounting ears horizontally

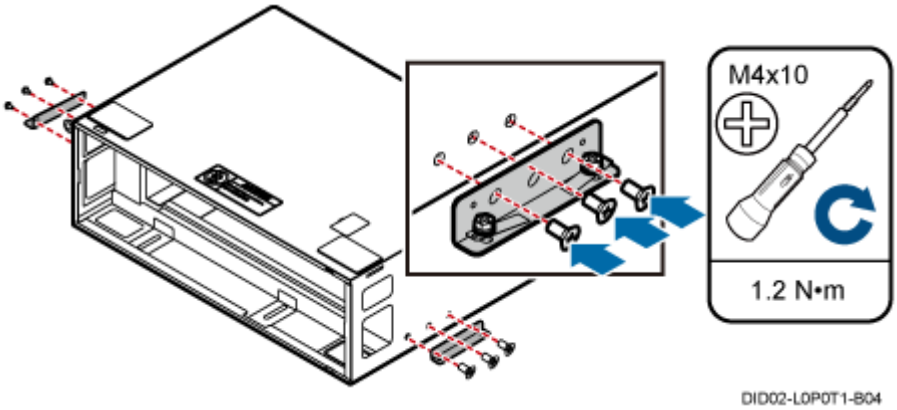

Step 3 Secure the IMB03 to the feet of the ICR, as shown in **Figure 11-3**.

Copyright © Huawei Technologies Co., Ltd.

Figure 11-3 Securing the IMB03 to the feet of the ICR

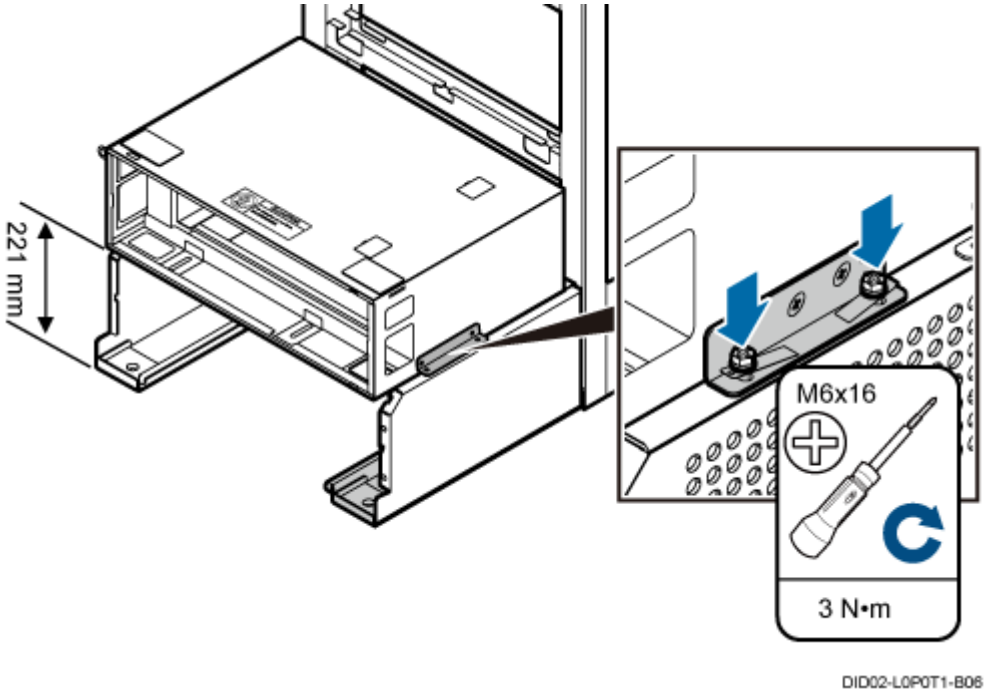

----End

11.2 Installing the IMB03 on the Lower Level Separately

This section describes the procedure for installing the IMB03 on the lower level separately.

Context

NOTE

In this scenario, only the IMB03 on the lower level needs to be installed.

Procedure

Step 1 Remove the two protection plates from both sides of the IMB03, as shown in **Figure 11-4**.

Copyright © Huawei Technologies Co., Ltd.

Figure 11-4 Removing the protection plates

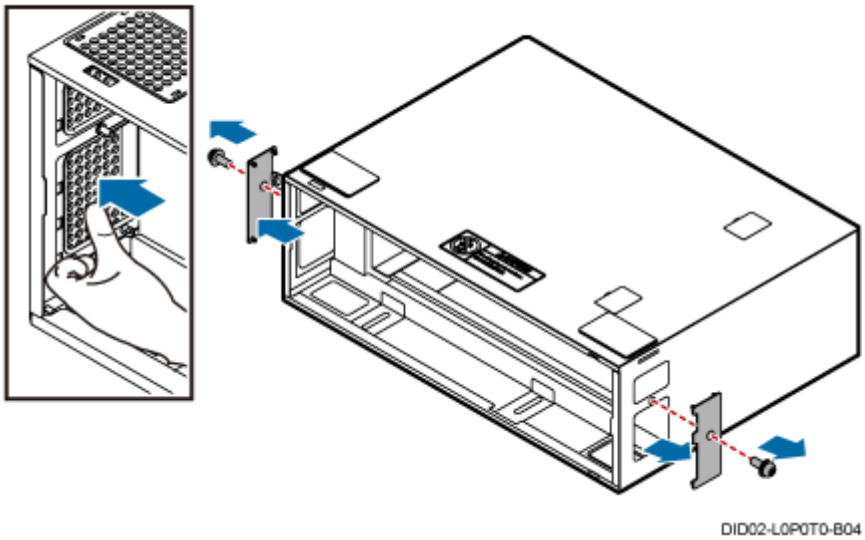

NOTE

After all the cables are routed, cut parts of the protection plates and use the cut parts to seal the cable holes if there is spare space in the cable holes.

Step 2 Install mounting ears vertically on the IMB03, as shown in **Figure 11-5**.

Figure 11-5 Installing mounting ears vertically

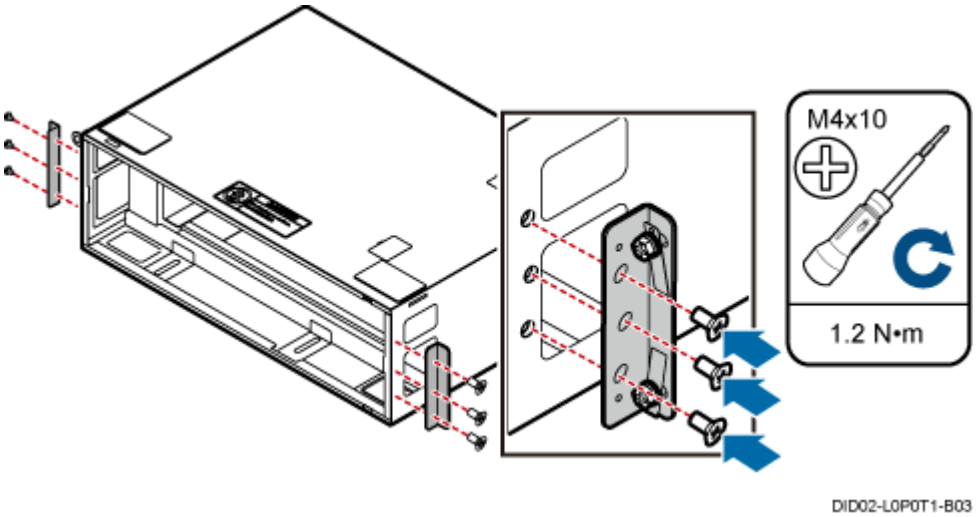

Step 3 Secure the IMB03 on the feet of the ICR, as shown in **Figure 11-6**.

Huawei Proprietary and Confidential
Copyright © Huawei Technologies Co., Ltd.

Figure 11-6 Securing the IMB03 on the feet of the ICR

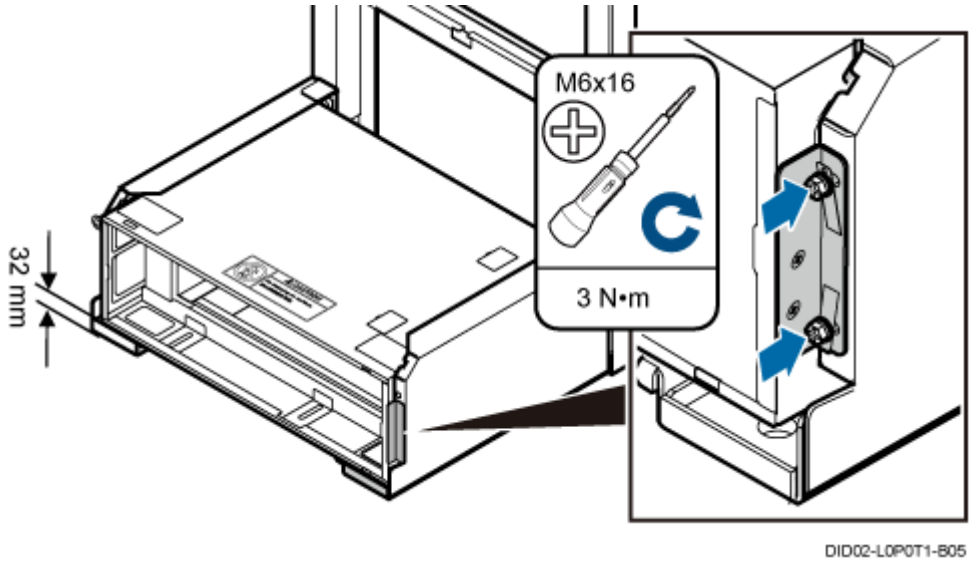

----End

11.3 Installing the IMB03s on the Upper and Lower Levels

This section describes the procedure for installing the IMB03s on the upper and lower levels.

Context

NOTE

If two IMB03s are required, install an IMB03 on the lower level, and then install the other IMB03 on the upper level.

Procedure

Step 1 Remove the four protection plates from the lower-level IMB03, as shown in **Figure 11-7**.

Figure 11-7 Removing the protection plates from the lower-level IMB03

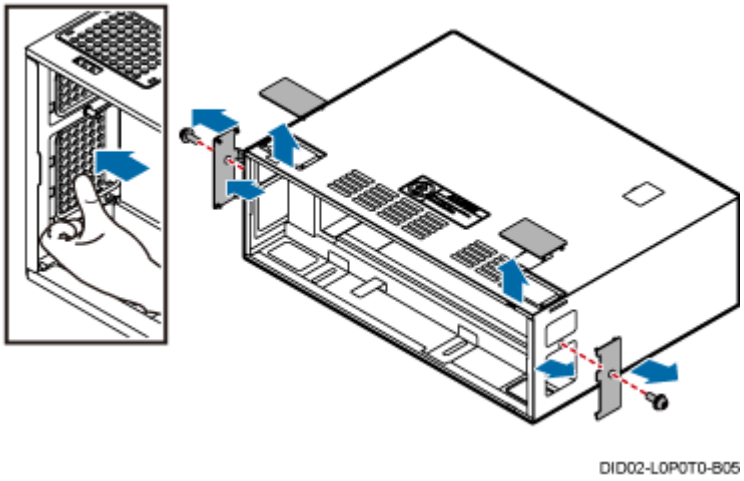

Copyright © Huawei Technologies Co., Ltd.

NOTE

After all the cables are routed, cut parts of the protection plates and use the cut parts to seal the cable holes if there is spare space in the cable holes.

Step 2 Install mounting ears vertically on the IMB03, as shown in **Figure 11-8**.

Figure 11-8 Installing mounting ears vertically

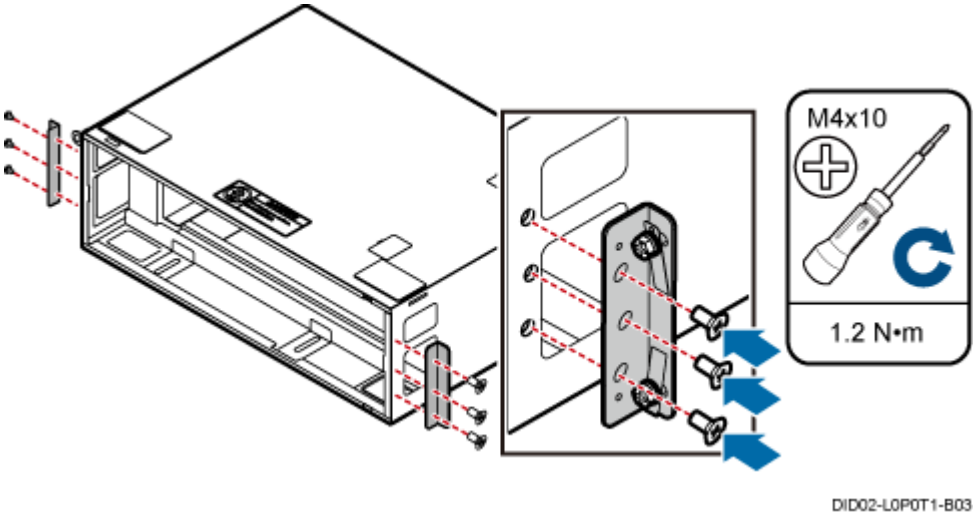

Step 3 Secure the IMB03 to the feet of the ICR, as shown in **Figure 11-9**.

Figure 11-9 Securing the IMB03 to the feet of the ICR

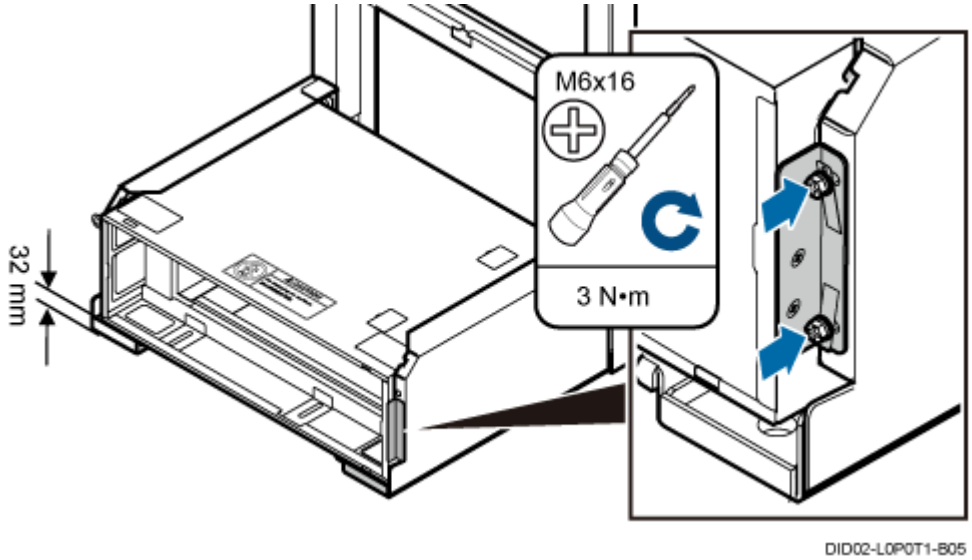

Step 4 Remove the protection plates from the top and bottom of the upper-level IMB03, as shown in **Figure 11-10**.

Huawei Proprietary and Confidential
Copyright © Huawei Technologies Co., Ltd.

Figure 11-10 Removing the protection plates from the upper-level IMB03

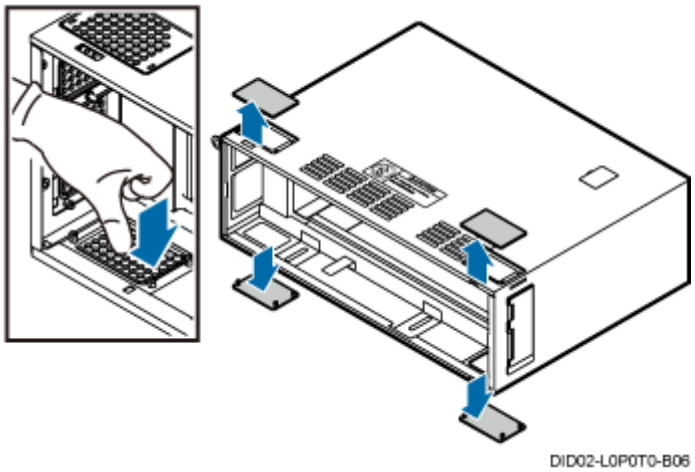

Step 5 Install mounting ears horizontally on the upper-level IMB03, as shown in **Figure 11-11**.

Figure 11-11 Installing mounting ears horizontally on the upper-level IMB03

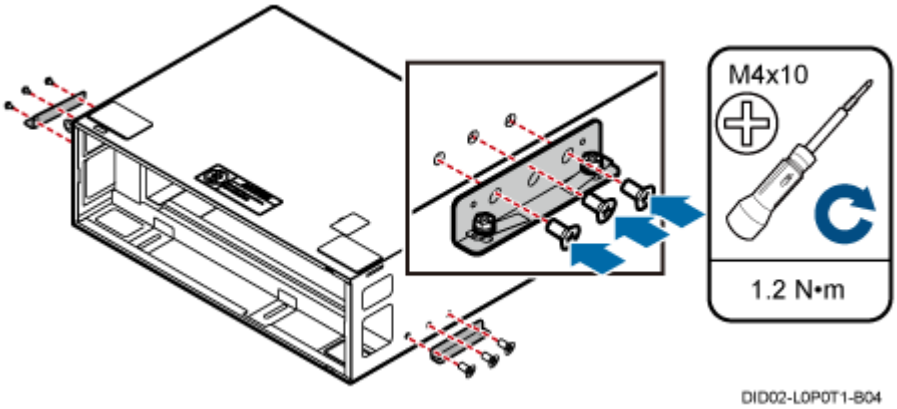

Step 6 Secure the IMB03 to the feet of the ICR, as shown in **Figure 11-12**.

Copyright © Huawei Technologies Co., Ltd.

Figure 11-12 Securing the IMB03 to the feet of the ICR

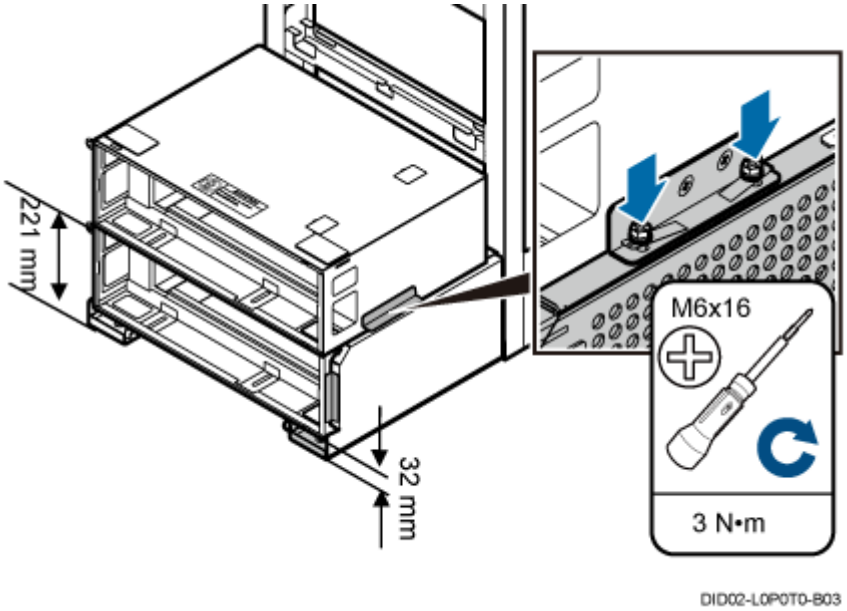

----End

Huawei Proprietary and Confidential
Copyright © Huawei Technologies Co., Ltd.

12 Installing the Equipotential Cable and PGND Cable

This chapter describes the procedures for installing the equipotential cable and PGND cable.

Context

Figure 12-1 shows the installation of the equipotential cable and PGND cable.

Copyright © Huawei Technologies Co., Ltd.

Figure 12-1 Installation of the equipotential cable and PGND cable

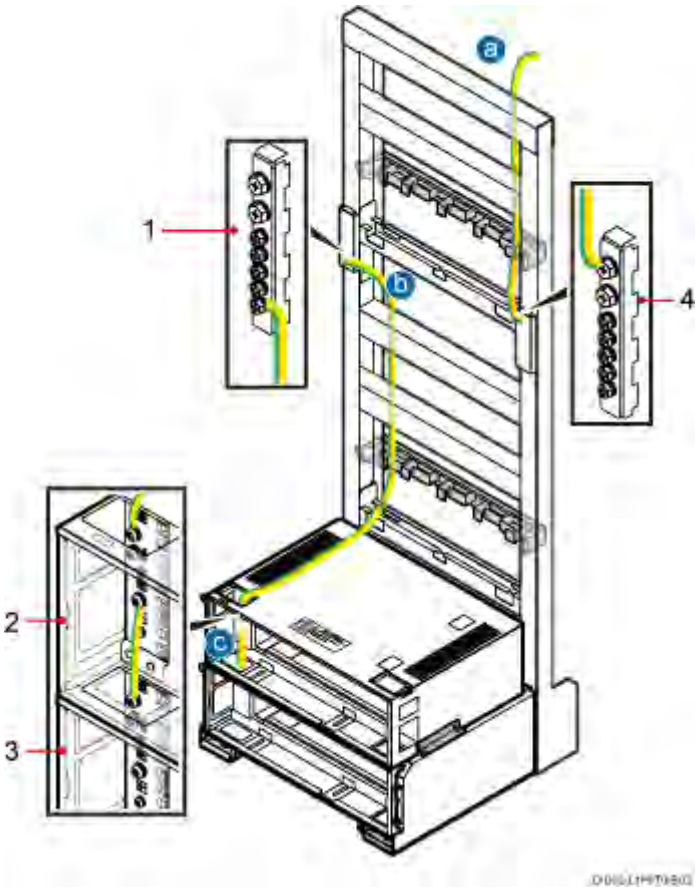

(1) Ground bar 1 (2) Upper-level IMB03 (3) Lower-level IMB03 (4) Ground bar 2

Procedure

Step 1 Connect the PGND cable for the ICR.

Step 2 Connect the equipotential cable between the IFS06 and the IMB03.

Step 3 Install the equipotential cable between the IMB03s on the upper and lower levels.

Cable Id	Cable	Connector	Installation Position
a	PGND cable for the ICR	OT terminal (16 mm², M8)	Ground terminal on ground bar 2 of the IFS06
		OT terminal added based on actual requirement	External ground bar
b	Equipotential cable between the IFS06 and the IMB03	OT terminal (16 mm², M6)	Ground terminal on ground bar 1 of the IFS06
		OT terminal (16 mm², M6)	Ground terminal on the upper-level IMB03

Huawei Proprietary and Confidential
Copyright © Huawei Technologies Co., Ltd.

Cable Id	Cable	Connector	Installation Position
c	Equipotential cable between the IMB03s on the upper and lower levels	OT terminal (6 mm², M4)	Ground terminal on the upper-level IMB03
		OT terminal (6 mm², M4)	Ground terminal on the lower-level IMB03

Step 4 Route cables by referring to **15.1 Cabling Requirements**.

Step 5 Use cable ties to bind cables.

Step 6 Label the installed cables by referring to Attaching a Sign Plate Label.

----End

Copyright © Huawei Technologies Co., Ltd.

13 Installing Devices in the IMB03

About This Chapter

This chapter describes the installation of the devices in the IMB03.

Context

Before installing devices, you need to determine the number of IMB03 racks and the devices to be installed in the IMB03 according to **3.2 Installation Options**, and then install the devices according to the slot description. **Figure 13-1** shows the installation slots of the DCDU-03B, BBU, and power supply system in the IMB03.

Figure 13-1 Configurations of the slots in the IMB03

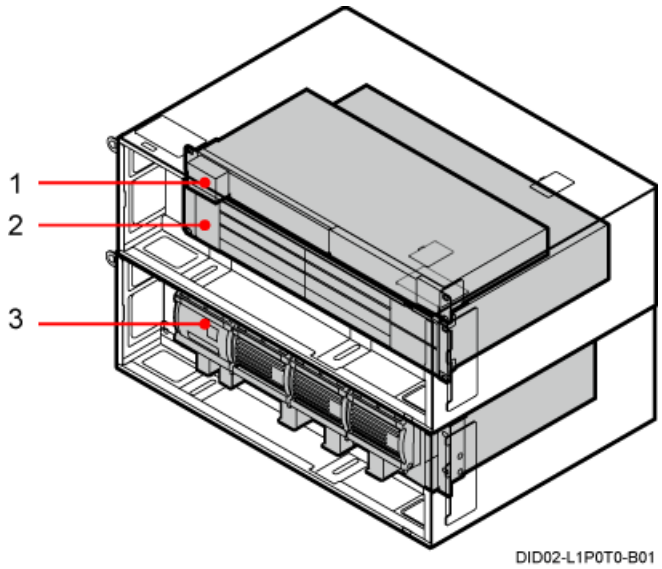

(1) DCDU-03B (2) BBU (3) Power equipment

Copyright © Huawei Technologies Co., Ltd.

13.1 Installing the BBU

This section describes the procedure for installing the BBU in the IMB03.

Procedure

Step 1 Install the mounting ears on both sides of the BBU reversely.

1. Remove the mounting ears, as shown in **Figure 13-2**.

Figure 13-2 Removing the mounting ears

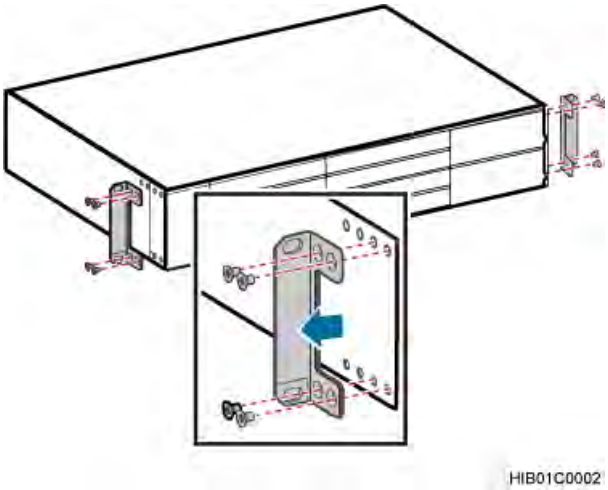

2. Install the mounting ears reversely, as shown in **Figure 13-3**.

Figure 13-3 Installing the mounting ears reversely

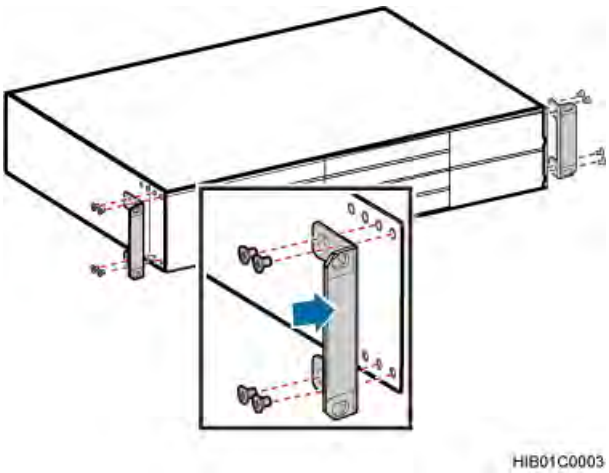

Step 2 Install the BBU into the corresponding slot in the IMB03, and then tighten the four M6x16 bolts on the panel, as shown in **Figure 13-4**.

Huawei Proprietary and Confidential
Copyright © Huawei Technologies Co., Ltd.

Figure 13-4 Installing the BBU into the slot in the IMB03

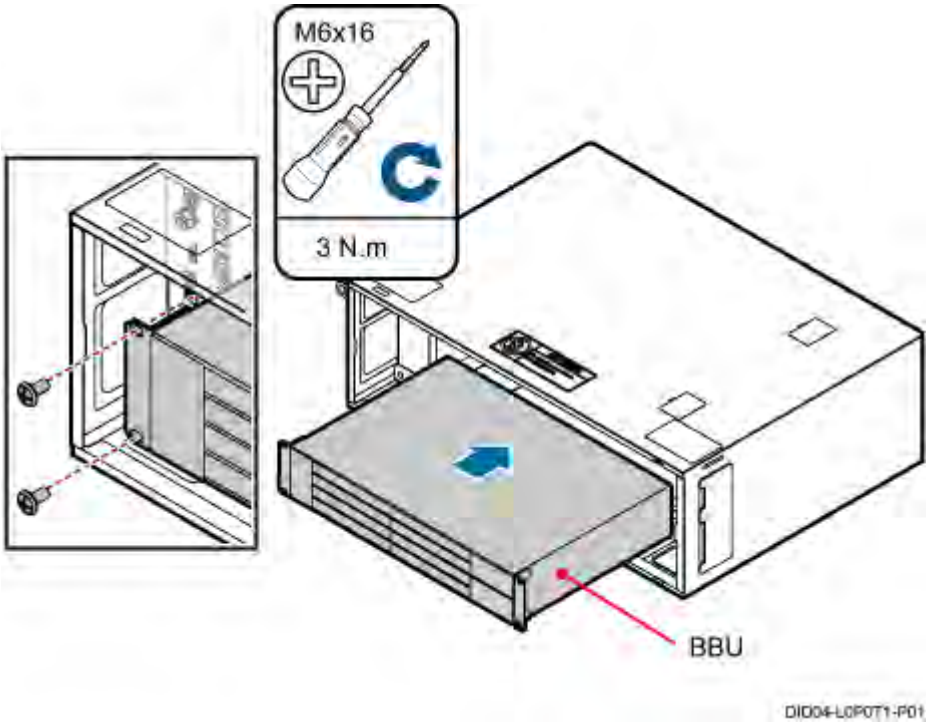

----End

13.2 Installing the DCDU-03B

This section describes the procedure for installing the DCDU-03B in the IMB03.

Context

The cross-section area of the PGND cable for DCDU-03B is 16 mm^2.

Procedure

Step 1 Install the DCDU-03B into the corresponding slot in the IMB03, and then tighten the four M6x16 bolts on the panel, as shown in **Figure 13-5**.

Copyright © Huawei Technologies Co., Ltd.

Figure 13-5 Installing the DCDU-03B into the slot in the IMB03

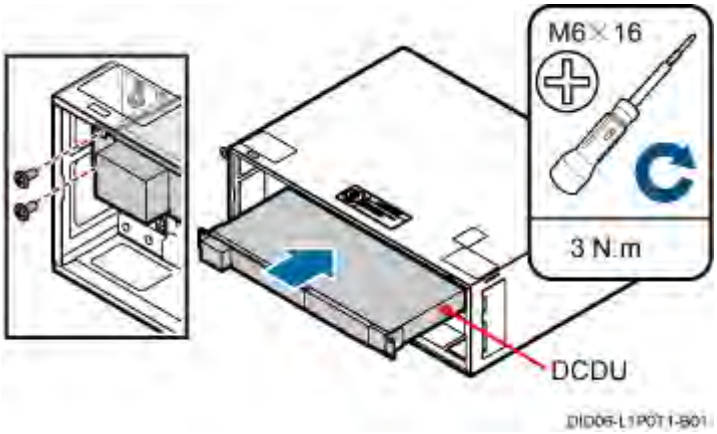

Step 2 Install the PGND cable for the DCDU-03B, as shown in **Figure 13-6**.

Figure 13-6 Installing the PGND cable for the DCDU-03B

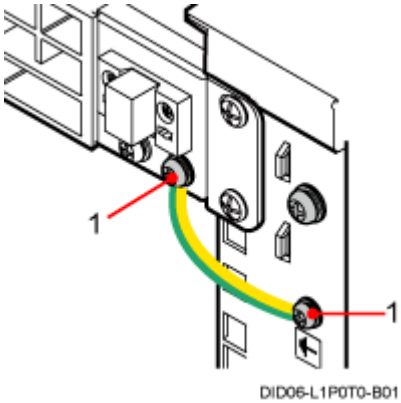

(1) OT terminal (M4)

----End

13.3 (Optional) Installing the Power Equipment (DC/DC)

This section describes the procedure for installing the power equipment (DC/DC) in the IMB03.

Context

The installation of the power equipment (DC/DC) is required in the +24 V DC power supply scenario.

Procedure

Step 1 Remove the mounting ears and reinstall them backwards on the power equipment (DC/DC), as shown in **Figure 13-7**.

Huawei Proprietary and Confidential
Copyright © Huawei Technologies Co., Ltd.

Figure 13-7 Reinstalling the mounting ears

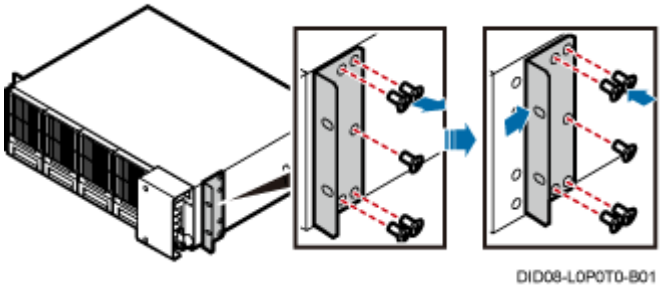

Step 2 Install the power equipment (DC/DC) into the corresponding slot in the lower-level IMB03, and then tighten the four M6x16 bolts on the panel, as shown in **Figure 13-8**.

Figure 13-8 Installing the power equipment (DC/DC) in the IMB03

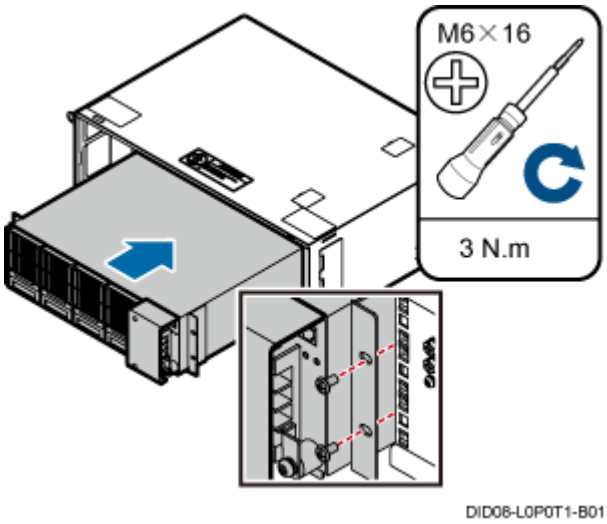

Step 3 Install the PGND cable, as shown in **Figure 13-9**.

Copyright © Huawei Technologies Co., Ltd.

Figure 13-9 Installing the PGND cable for the power equipment (DC/DC)

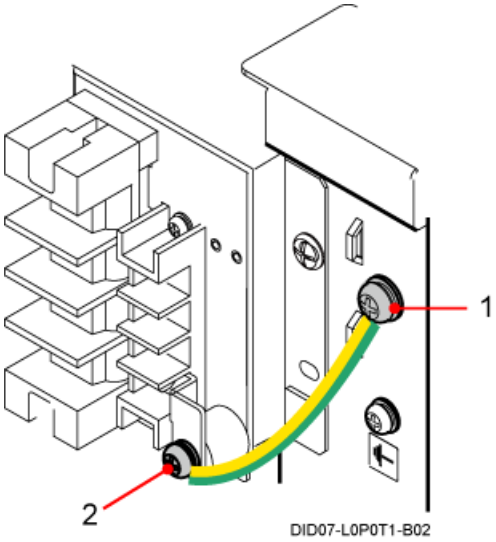

(1) OT terminal (M6)

(2) OT terminal (M4)

----End

13.4 (Optional) Installing the Power Equipment (AC/DC)

This section describes the procedure for installing the power equipment (AC/DC) in the IMB03.

Context

The installation of the power equipment (AC/DC) is required in the 220 V AC power supply scenario.

Procedure

Step 1 Install the power equipment (AC/DC) into the corresponding slot in the lower-level IMB03, and then tighten the four M6x16 bolts on the panel, as shown in **Figure 13-10**.

Huawei Proprietary and Confidential
Copyright © Huawei Technologies Co., Ltd.

Figure 13-10 Installing the power equipment (AC/DC) in the IMB03

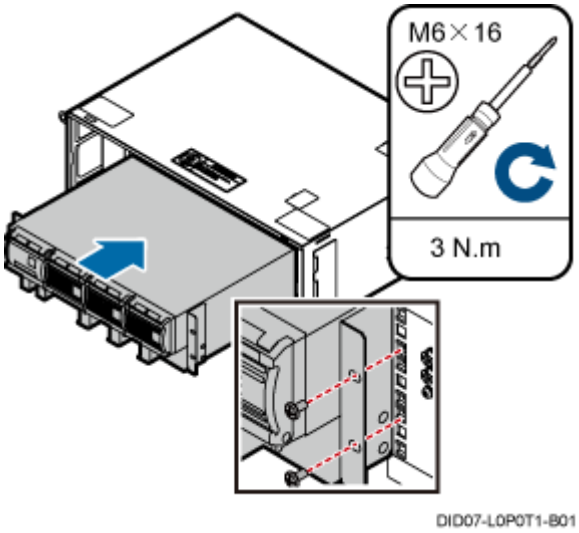

Step 2 Install the PGND cable for the power equipment (AC/DC), as shown in **Figure 13-11**.

Copyright © Huawei Technologies Co., Ltd.

Figure 13-11 Installing the PGND cable for the power equipment (AC/DC)

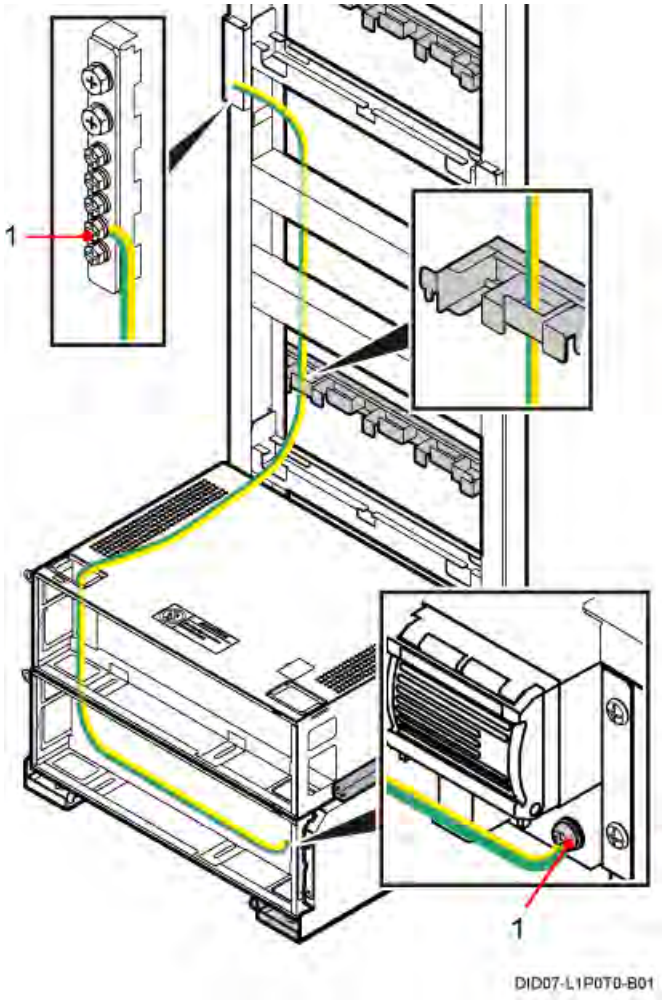

(1) OT terminal (M6)

----End

Huawei Proprietary and Confidential
Copyright © Huawei Technologies Co., Ltd.

14 Installing the RRU

About This Chapter

This section describes the procedure for installing the AC RRU and DC RRU.

14.1 Installing the DC RRU
This section describes the procedure for installing the DC RRU.

14.2 Installing the AC RRU
This section describes the procedure for installing the AC RRU.

Copyright © Huawei Technologies Co., Ltd.

14.1 Installing the DC RRU

This section describes the procedure for installing the DC RRU.

Context

The procedures for installing the DC RRU in the IFS06+IMB03+RRU scenario and in the IFS06 +RRU scenario are the same. This document takes the IFS06+IMB03+RRU scenario as an example.

The procedure for installing the RRU3008, RRU3805, RRU3804, RRU3201, or RRU3908 is the same. This document takes the RRU3908 as an example.

NOTE

- Place the foam pad or cardboard under the RRU to prevent any damage to the housing of the RRU.
- The load-bearing capacity of the RF ports at the bottom of the RRU is low. Do not stand the RRU upright.
- The screws for securing the adapting piece that are removed from the back of the RRU are reused for installing the adapting piece on the side.
- You must remove screws from the side of the RRU3008, RRU3908, or RRU3805 before installing the adapting piece, as shown in **Figure 14-2**. For other types of RRU, skip the step.

Procedure

Step 1 Exchange the positions for the adapting piece at the back of the RRU and cover plate on the side of the RRU.

1. Remove the adapting piece at the back of the RRU and cover plate on the side of the RRU, as shown in **Figure 14-1**.

Figure 14-1 Removing the adapting piece and cover plate

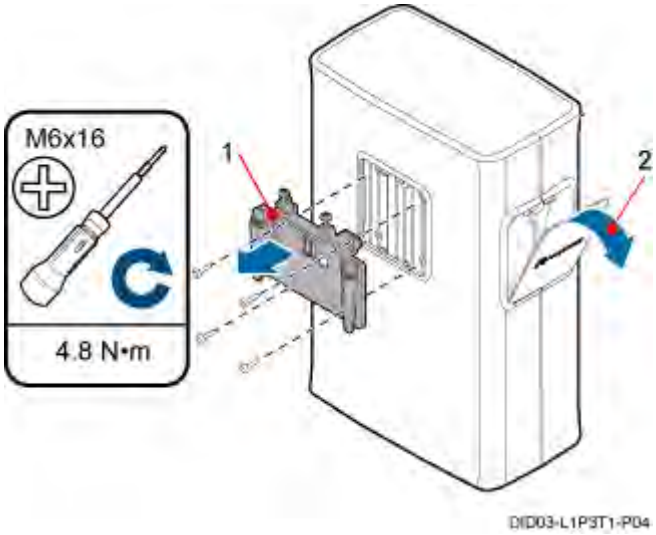

(1) Adapting piece (2) Cover plate

2. Remove the screws, as shown in **Figure 14-2**.

Huawei Proprietary and Confidential
Copyright © Huawei Technologies Co., Ltd.

Figure 14-2 Removing the screws

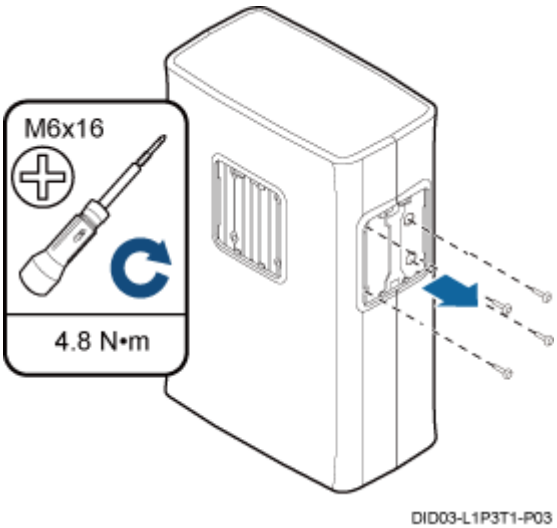

3. Reinstall the adapting piece and cover plate on the RRU, as shown in **Figure 14-3**.

Figure 14-3 Reinstalling the adapting piece and cover plate

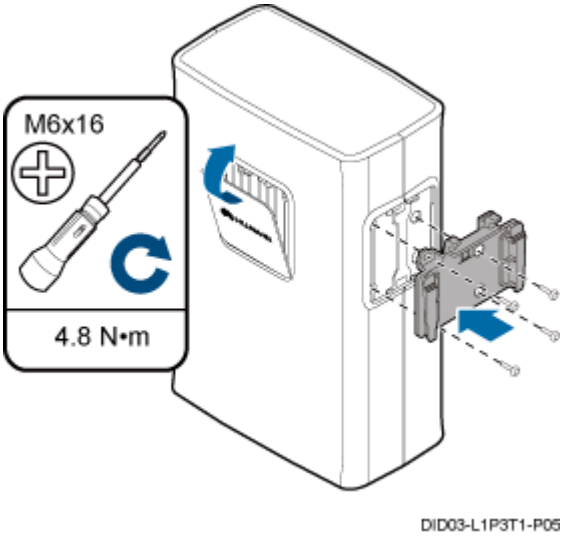

Step 2 Link the M6 OT terminal at one end of the PGND cable to the wiring terminal at the bottom of the RRU, and leave the other end idle, as shown in **Figure 14-4**.

Copyright © Huawei Technologies Co., Ltd.

Figure 14-4 Connecting the PGND cable for the RRU to the wiring terminal at the bottom

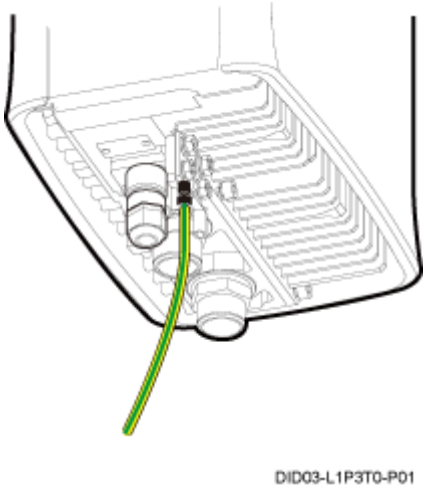

Step 3 Install the RRU on the main bracket, as shown in **Figure 14-5**.

Figure 14-5 Installing the RRU on the main bracket

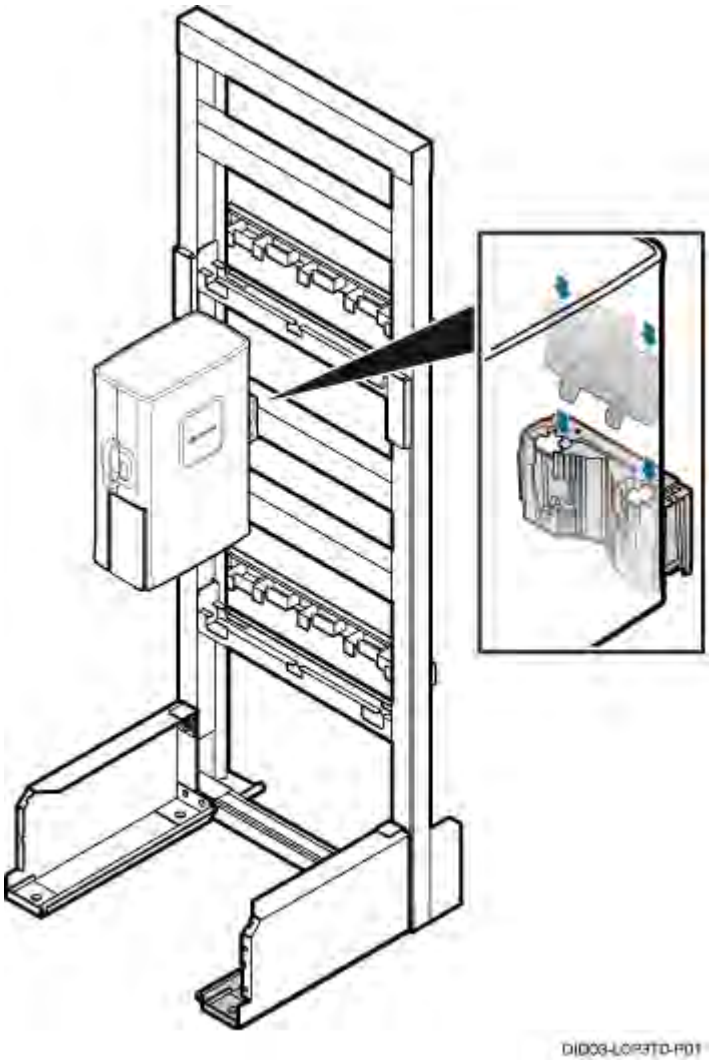

Huawei Proprietary and Confidential
Copyright © Huawei Technologies Co., Ltd.

CAUTION

Do not step on the IMB03 during the RRU installation.

Step 4 Repeat **Step 1**, **Step 2**, and **Step 3** to install three RRUs, six RRUs, or 12 RRUs, as shown in **Figure 14-6**.

Figure 14-6 Installing six RRUs

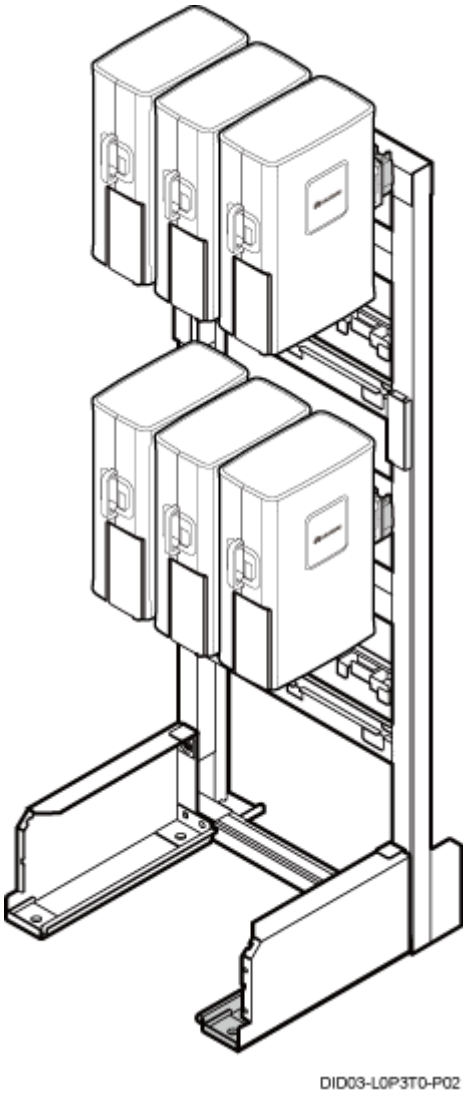

----End

14.2 Installing the AC RRU

This section describes the procedure for installing the AC RRU.

Copyright © Huawei Technologies Co., Ltd.

Context

NOTE

- Place the foam pad or cardboard under the RRU to prevent any damage to the housing of the RRU.
- The load-bearing capacity of the RF ports at the bottom of the RRU is low. Do not stand the RRU upright.

Procedure

Step 1 Link the M6 OT terminal at one end of the PGND cable to the wiring terminal at the bottom of the RRU, and leave the other end idle, as shown in **Figure 14-7**.

Figure 14-7 Connecting the PGND cable for the RRU to the wiring terminal at the bottom

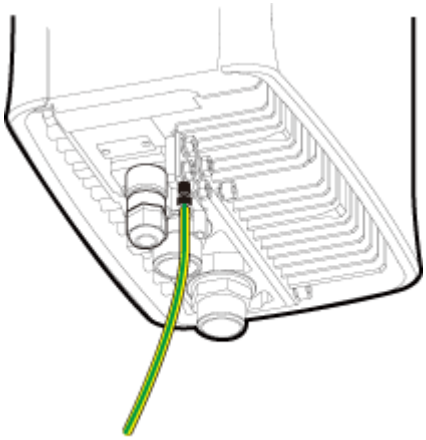

Step 2 Install the AC RRU on the main bracket, as shown in **Figure 14-8**.

Huawei Proprietary and Confidential
Copyright © Huawei Technologies Co., Ltd.

Figure 14-8 Installing the AC RRU on the main bracket

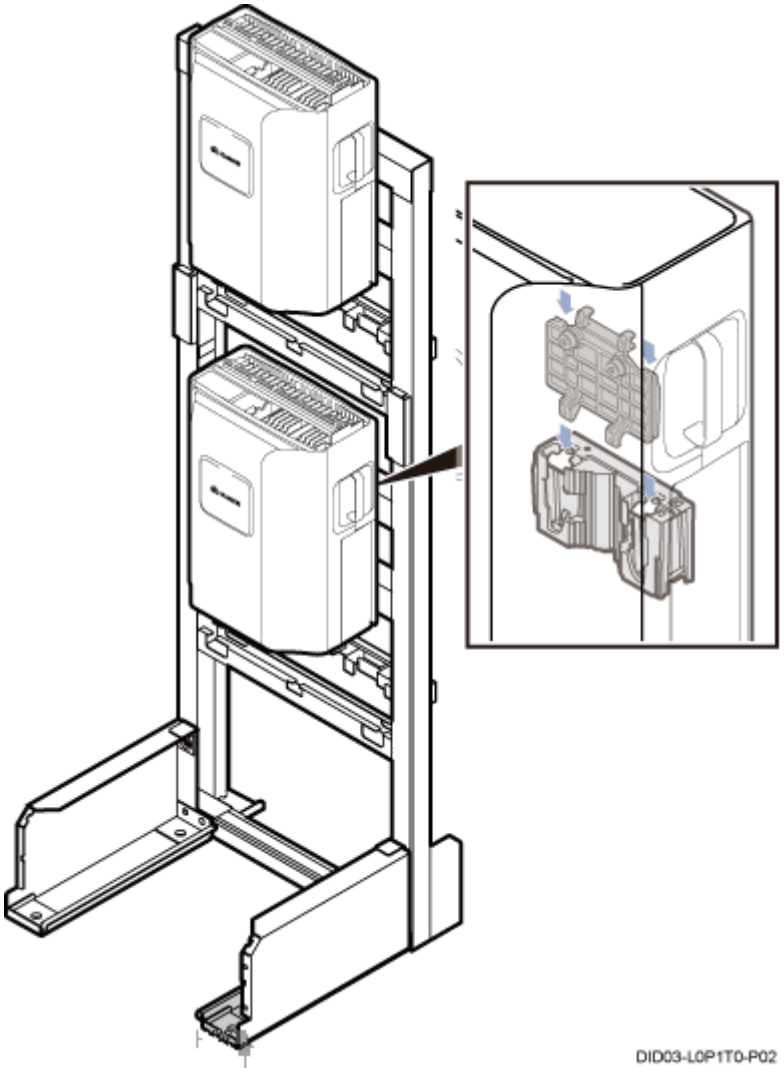

NOTE

Install the AC RRU on the lower level before installing the RRU on the upper level.

----End

Copyright © Huawei Technologies Co., Ltd.

15 Installing Cables

About This Chapter

This chapter describes the procedure for installing all the cables.

15.1 Cabling Requirements
Route cables according to the specified cabling requirements to prevent signal interference.

15.2 Cable Connections
This section describes the cable connections in different scenarios.

15.3 Cable Installation Process
This section describes the process of installing the ICR-related cables.

15.4 Cable Routes
This section describes the cable routes.

15.5 Installing the PGND Cable for the RRU
This section describes the procedure for installing the PGND cable for the RRU.

15.6 Installing the Power Cable for the BBU
This section describes the installation of the power cable for the BBU.

15.7 Installing the Input Power Cable
This section describes the installation of the input power cable.

15.8 (Optional) Installing the Power Cable and Monitoring Signal Cable for the DCDU
This section describes the procedure for installing the power cable and monitoring signal cable.

15.9 Installing the Power Cable for the RRU
This section describes the installation of the power cable for the RRU.

15.10 Installing the E1/T1 Cable (FE/GE Cable or FE/GE Optical Cable)
This section describes the installation of the E1/T1 cable, FE/GE cable, and FE/GE optical cable. The FE/GE cable and FE/GE optical cable are optional. The following description is based on the installation of the E1/T1 cable.

15.11 Installing the CPRI Optical Cable
This section describes the procedure for installing the CPRI optical cable.

15.12 Installing the Antenna Jumper for the RRU

Copyright © Huawei Technologies Co., Ltd.

This section describes the procedure for installing the antenna jumper for the DC RRU.

15.13 Installing a GPS Clock Signal Cable

This section describes the procedure for installing the GPS clock signal cable.

Huawei Proprietary and Confidential
Copyright © Huawei Technologies Co., Ltd.

15.1 Cabling Requirements

Route cables according to the specified cabling requirements to prevent signal interference.

NOTE

If a cable listed below is not required, skip the routing of the cable.

General Cabling Requirements

The bending radius of the cables must meet the following specifications:

- The bending radius of the 7/8" feeder must be more than 250 mm (9.84 in.), and the bending radius of the 5/4" feeder must be more than 380 mm (14.96 in.).
- The bending radius of the 1/4" jumper must be more than 35 mm (1.38 in.). The bending radius of the super-flexible 1/2" jumper must be more than 50 mm (1.97 in.), and the bending radius of the ordinary 1/2" jumper must be more than 127 mm (5 in.).
- The bending radius of the power cable or PGND cable must be at least five times the diameter of the cable.
- The bending radius of the optical fiber must be at least 20 times the diameter of the optical fiber.
- The bending radius of the E1/T1 cable must be at least five times the diameter of the cable.
- The bending radius of the signal cable must be at least five times the diameter of the cable.

The cables must be bound as follows:

- Different types of cables must be separately routed and cannot be entangled.
- The cables must be bound tightly and neatly. The sheaths of the cables must not be damaged.
- The cable ties must face the same direction, and those at the same horizontal line must be in a straight line. Extra length of cable ties must be cut.
- Labels or nameplates must be attached to the cables after they are installed.

The cables must be routed as follows:

- Different types of cables must be separately routed with a minimum space of 30 mm (1.18 in.) between every two cables.
- Different types of cables must be installed in an untangled and orderly fashion.
- Different types of cables must be routed in parallel or separated by special objects.

Special Cabling Requirements

Cabling requirements for power cables are as follows:

- -48 V DC power cables must be bound together.
- +24 V DC power cables must be bound together.
- Power cables, transmission cables, and signal cables are routed separately.
- Multiple power cables must be bound when routed.
- Power cables must be installed in the position specified in engineering design documents.
- If the length of power cables is insufficient, replace the cables rather than adding connectors or soldering joints to lengthen the cables.

Copyright © Huawei Technologies Co., Ltd.

Cabling requirements for PGND cables are as follows:

- PGND cables for the base station must be connected to the same ground bar.
- PGND cables must be buried in the ground or routed indoors. They should not be routed overhead before they are led into the equipment room.
- The exterior of the coaxial wire and the shield layer of the shielded cable must have proper electrical contact with the metal surface of the equipment to which they are connected.
- PGND cables and signal cables must be installed in an untangled and orderly fashion. A certain distance must be reserved between them to prevent interference from each other.
- Fuses or switches must not be installed on the PGND cables.
- Other devices must not be used for electrical connections of the PGND cables.
- All the metal parts in the housing of the equipment must be reliably connected to the ground terminal.

Cabling requirements for E1 cables are as follows:

- E1 cables must not cross power cables, PGND cables, or RF cables when routed. If transmission cables are routed with power cables, PGND cables, or RF cables in parallel, the spacing between them must be greater than 30 mm (1.18 in.).
- E1 cables are routed straightly and bound neatly with cable ties.
- Sufficient slack is provided in E1 cables at turns.

Cabling requirements for optical fibers are as follows:

- Do not stretch, step on, or place heavy objects on optical fibers. Keep the fibers away from sharp objects.
- When optical fibers are routed, the extra length of the fibers must be coiled around special devices, such as a fiber coiler.
- When coiling optical fibers, apply even strength. Do not bend the fibers with force.
- Vacant optical connectors must be covered with dustproof caps.

15.2 Cable Connections

This section describes the cable connections in different scenarios.

15.2.1 Cable Connections (-48 V DC, Six RRU3008s)
This section describes all the cable connections in a base station configured with six RRU3008s in the -48 V DC power supply scenario.

15.2.2 Cable Connections (-48 V DC, Six RRU3804s)
This section describes all the cable connections in a base station configured with six RRU3804s in the -48 V DC power supply scenario.

15.2.3 Cable Connections (-48 V DC, Six RRU3201s)
This section describes all the cable connections in a base station configured with six RRU3201s in the -48 V DC power supply scenario.

15.2.4 Cable Connections (-48 V DC, Six RRU3908s)
This section describes all the cable connections in a base station configured with six RRU3908s in the -48 V DC power supply scenario.

15.2.5 Cable Connections (-48 V DC, Three RRU3908s+Three RRU3804s)

Copyright © Huawei Technologies Co., Ltd.

This section describes all the cable connections in the dual-mode and triple-mode scenarios when three RRU3908s and three RRU3804s are configured and the -48 V DC power supply is provided.

15.2.6 Cable Connections (-48 V DC, Three RRU3008s+Three RRU3804s)
This section describes all the cable connections in a base station configured with three RRU3008s and three RRU3804s in the -48 V DC power supply scenario.

15.2.7 Cable Connections (-48 V, Three RRU3908s + Three RRU3201s)
This section describes all the cable connections in the dual-mode and triple-mode scenarios when three RRU3908s and three RRU3201s are configured and the -48 V DC power supply is provided.

15.2.8 Cable Connections (-48 V DC, Three RRU3008s+Three RRU3201s)
This section describes all the cable connections in a base station configured with three RRU3008s and three RRU3201s in the -48 V DC power supply scenario.

15.2.9 Cable Connections (-48 V DC, Three RRU3804s+Three RRU3201s)
This section describes all the cable connections in a base station configured with three RRU3804s and three RRU3201s in the -48 V DC power supply scenario.

15.2.10 Cable Connections (-48 V DC, Six RRU3008s+Six RRU3804s)
This section describes all the cable connections in a base station configured with six RRU3008s and six RRU3804s in the -48 V DC power supply scenario.

15.2.11 Cable Connections (-48 V DC, Six RRU3908s+Six RRU3804s)
This section describes all the cable connections in the dual-mode and triple-mode scenarios when six RRU3908s and six RRU3804s are configured and the -48 V DC power supply is provided.

15.2.12 Cable Connections (-48 V DC, Six RRU3908s+Six RRU3201s)
This section describes all the cable connections in the dual-mode and triple-mode scenarios when six RRU3908s and six RRU3201s are configured and the -48 V DC power supply is provided.

15.2.13 Cable Connections (-48 V DC, Six RRU3008s+Six RRU3201s)
This section describes all the cable connections in a base station configured with six RRU3008s and six RRU3201s in the -48 V DC power supply scenario.

15.2.14 Cable Connections (-48 V DC, Six RRU3804s+Six RRU3201s)
This section describes all the cable connections in a base station configured with six RRU3804s and six RRU3201s in the -48 V DC power supply scenario.

15.2.15 Cable Connections (AC RRU)
This section describes all the cable connections for the only one RRU configured in a base station with AC power supply.

15.2.16 Cable Connections (220 V AC)
This section describes the cable connections for the power equipment (AC/DC) in a base station with 220 V AC power supply.

15.2.17 Cable Connections (+24 V DC)
This section describes the cable connections for the power equipment (DC/DC) in a base station with +24 V DC power supply.

15.2.1 Cable Connections (-48 V DC, Six RRU3008s)

This section describes all the cable connections in a base station configured with six RRU3008s in the -48 V DC power supply scenario.

Figure 15-1 shows the cable connections.

Copyright © Huawei Technologies Co., Ltd.

Figure 15-1 Cable connections (-48 V DC, six RRU3008s)

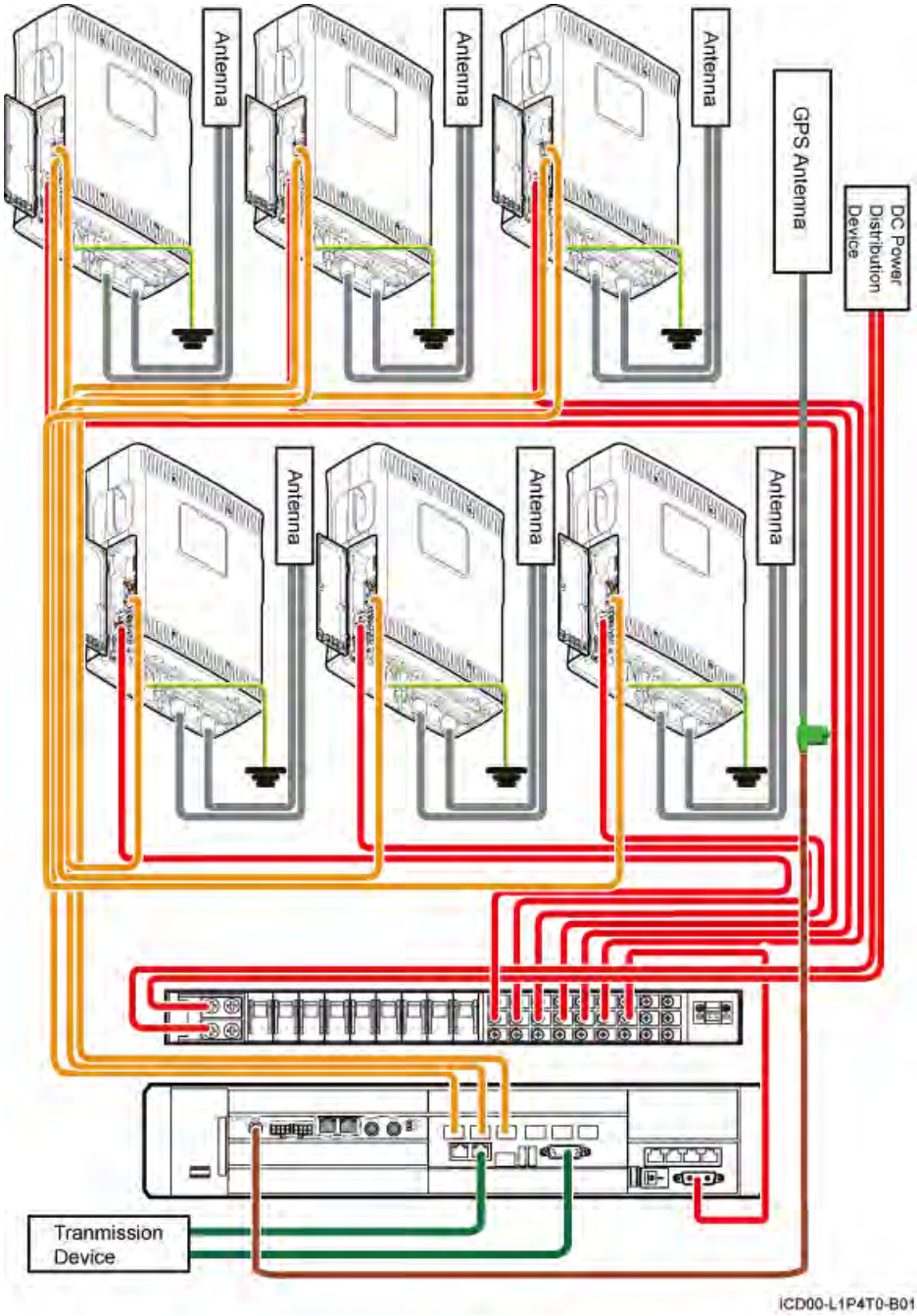

Table 15-1 describes the cables.

Table 15-1 Cable description

	Power cable		CPRI cable		GPS clock signal cable
	Jumper		PGND cable		E1/T1 cable or FE/GE cable

Huawei Proprietary and Confidential
Copyright © Huawei Technologies Co., Ltd.

NOTE

The E1/T1 cable or FE/GE cable is used according to the on-site requirements.

15.2.2 Cable Connections (-48 V DC, Six RRU3804s)

This section describes all the cable connections in a base station configured with six RRU3804s in the -48 V DC power supply scenario.

Figure 15-2 shows the cable connections.

Figure 15-2 Cable connections (-48 V DC, six RRU3804s)

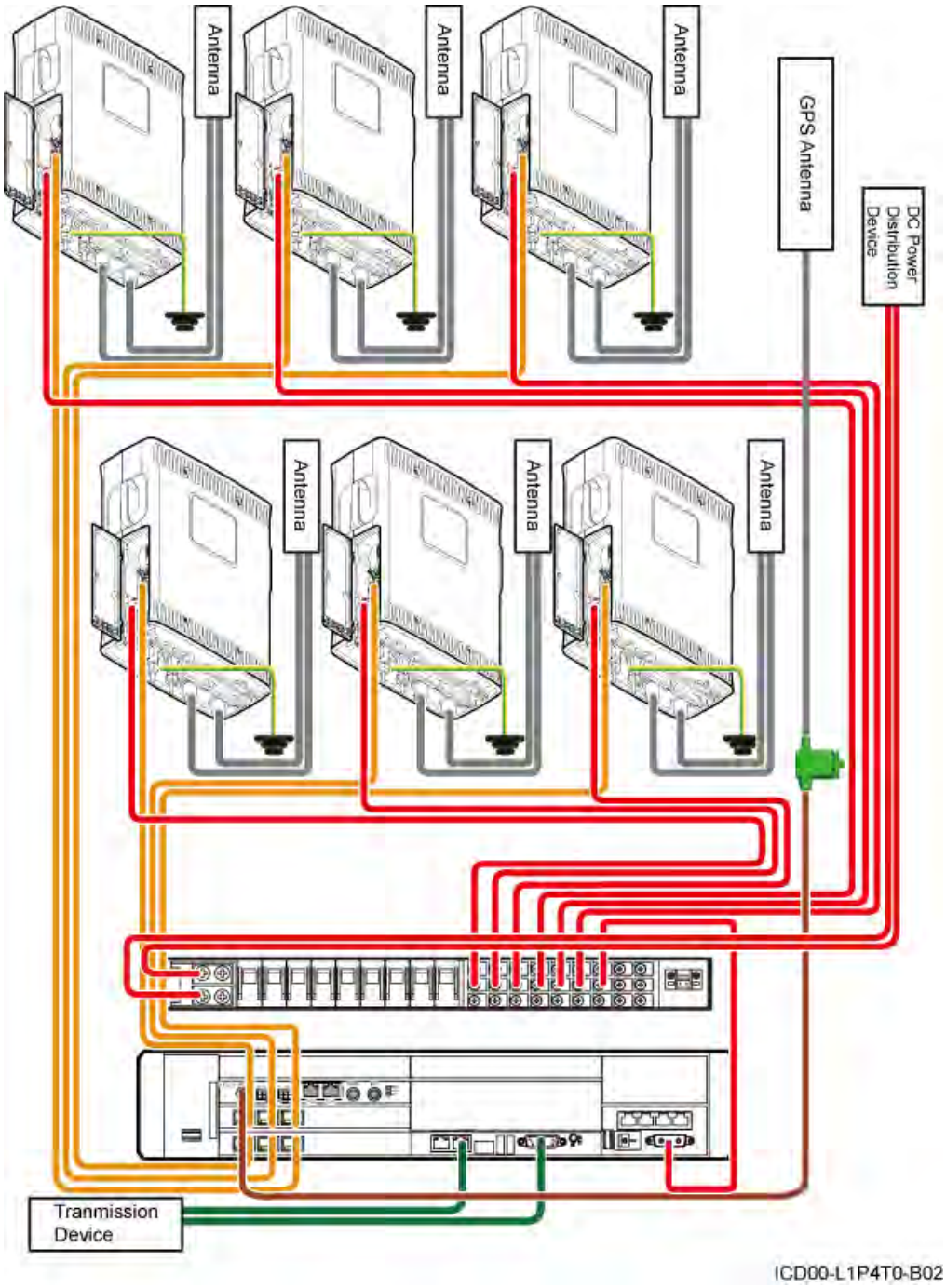

Copyright © Huawei Technologies Co., Ltd.

Table 15-2 describes the cables.

Table 15-2 Cable description

	Power cable		CPRI cable		GPS clock signal cable
	Jumper		PGND cable		E1/T1 cable or FE/GE cable

NOTE

The E1/T1 cable or FE/GE cable is used according to the on-site requirements.

15.2.3 Cable Connections (-48 V DC, Six RRU3201s)

This section describes all the cable connections in a base station configured with six RRU3201s in the -48 V DC power supply scenario.

Figure 15-3 shows the cable connections.

Huawei Proprietary and Confidential
Copyright © Huawei Technologies Co., Ltd.

Figure 15-3 Cable connections (-48 V DC, six RRU3201s)

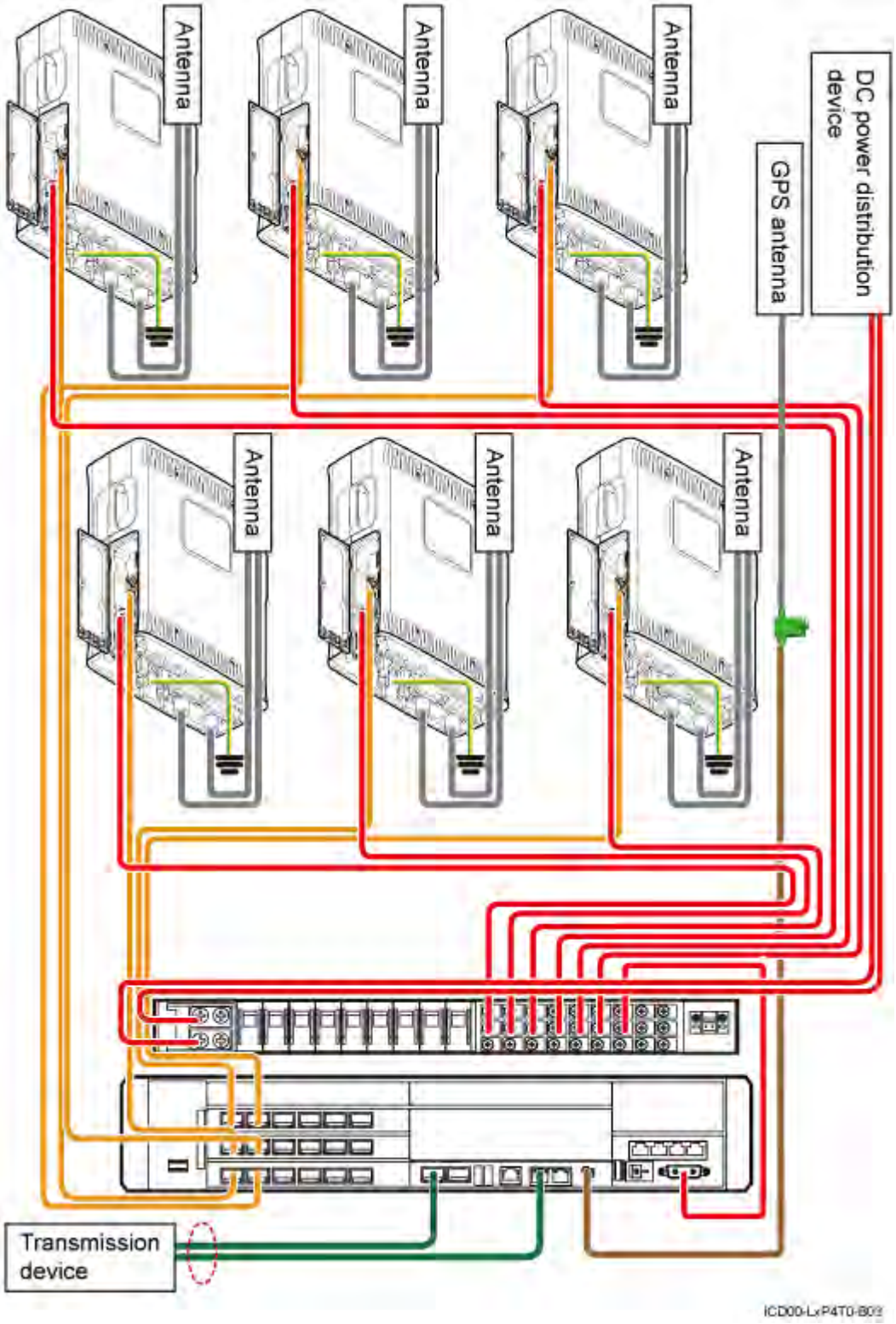

Table 15-3 describes the cables.

Copyright © Huawei Technologies Co., Ltd.

Table 15-3 Cable description

	Power cable		CPRI cable		GPS clock signal cable
	Jumper		PGND cable		E1/T1 cable or FE/GE cable

NOTE

Only an optical cable or Ethernet cable can be connected to a GE port on the LMPT.

15.2.4 Cable Connections (-48 V DC, Six RRU3908s)

This section describes all the cable connections in a base station configured with six RRU3908s in the -48 V DC power supply scenario.

Figure 15-4 shows the cable connections.

Huawei Proprietary and Confidential
Copyright © Huawei Technologies Co., Ltd.

Figure 15-4 Cable connections (-48 V DC, six RRU3908s)

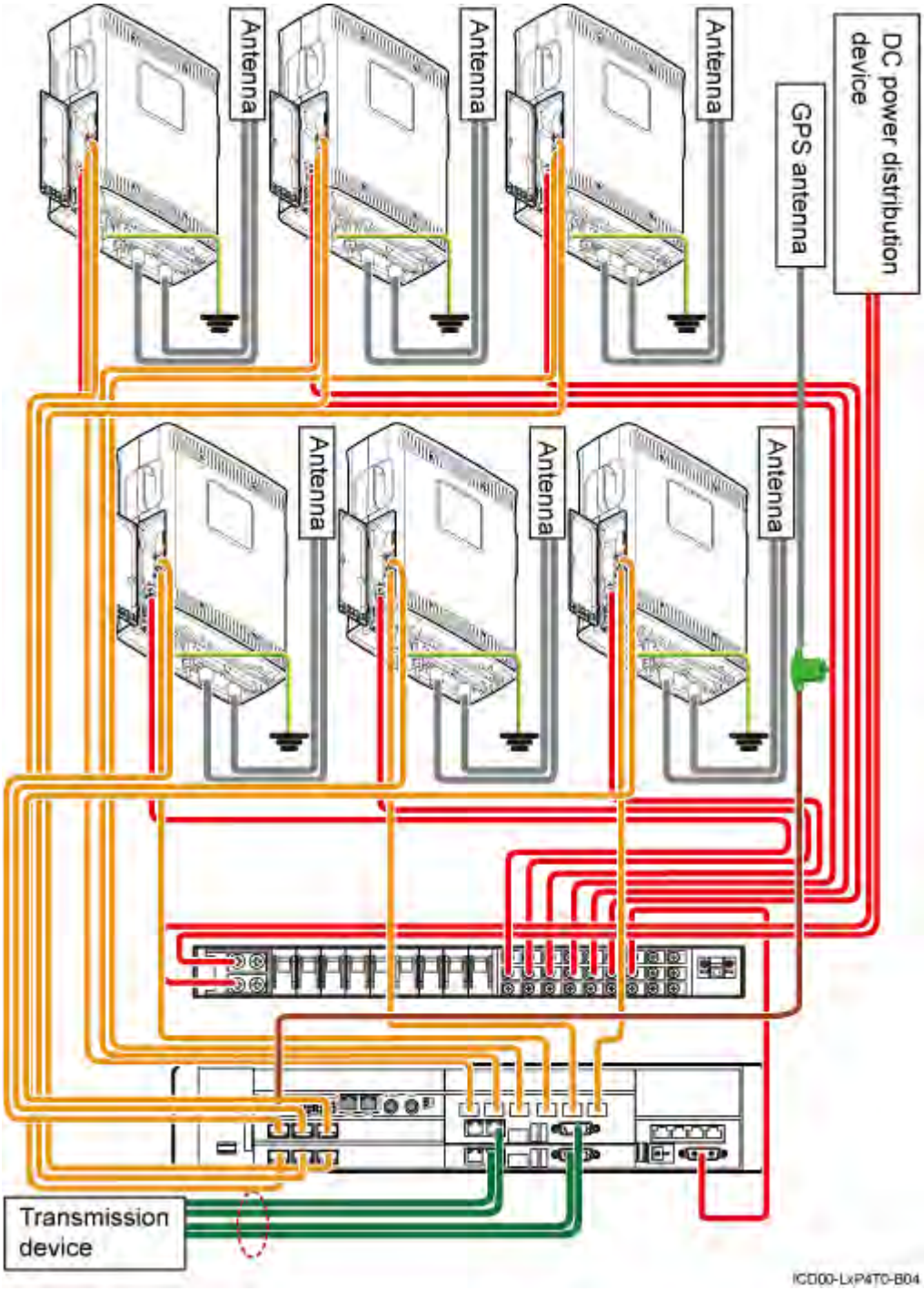

Table 15-4 describes the cables.

Table 15-4 Cable description

	Power cable		CPRI cable		GPS clock signal cable

Copyright © Huawei Technologies Co., Ltd.

	Jumper		PGND cable		E1/T1 cable or FE/GE cable

NOTE

The E1/T1 cable or FE/GE cable is used according to the on-site requirements.

15.2.5 Cable Connections (-48 V DC, Three RRU3908s+Three RRU3804s)

This section describes all the cable connections in the dual-mode and triple-mode scenarios when three RRU3908s and three RRU3804s are configured and the -48 V DC power supply is provided.

Cable Connections in the Dual-Mode Scenario

Figure 15-5 shows the cable connections in the dual-mode scenario.

Huawei Proprietary and Confidential
Copyright © Huawei Technologies Co., Ltd.

Figure 15-5 Cable connections in the dual-mode scenario (-48 V, three RRU3908s + three RRU3804s)

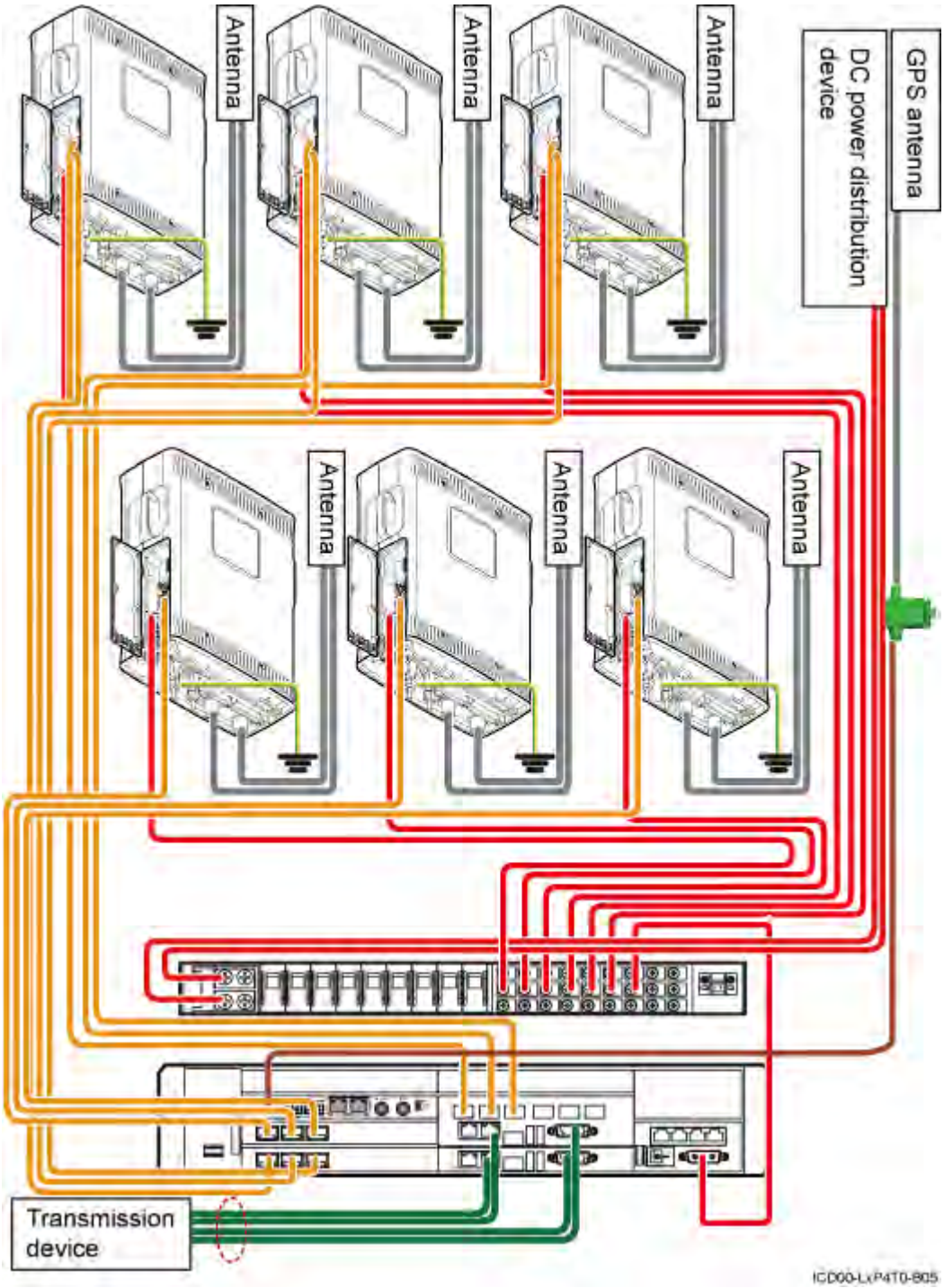

Table 15-5 lists the cables.

Table 15-5 Cable description

	Power cable		CPRI optical cable		GPS clock signal cable

Copyright © Huawei Technologies Co., Ltd.

	Jumper		PGND Cable		E1/T1 cable or FE/GE cable

NOTE

The E1/T1 cable or FE/GE cable is used according to the on-site requirements.

Cable Connections in the Triple-Mode Scenario

Figure 15-6 shows cable connections in the triple-mode scenario.

Huawei Proprietary and Confidential
Copyright © Huawei Technologies Co., Ltd.

Figure 15-6 Cable Connections in triple-mode scenario (-48 V DC, Three RRU3908s + Three RRU3804s)

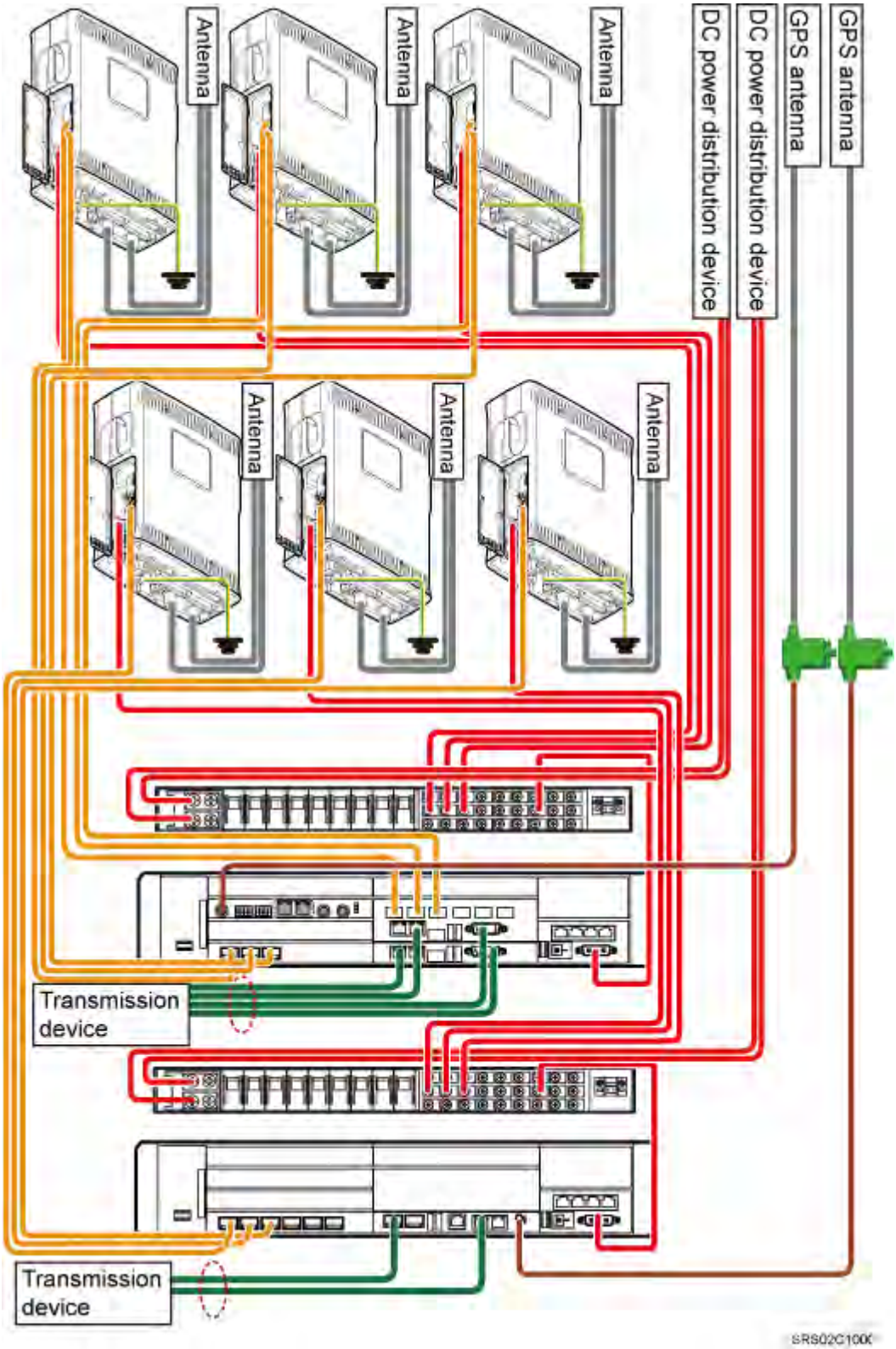

Table 15-6 lists the cables.

Copyright © Huawei Technologies Co., Ltd.

Table 15-6 Cable description

	Power cable		CPRI optical cable		GPS clock signal cable
	Jumper		PGND Cable		E1/T1 cable or FE/GE cable

NOTE

The E1/T1 cable or FE/GE cable is used according to on-site requirements.

15.2.6 Cable Connections (-48 V DC, Three RRU3008s+Three RRU3804s)

This section describes all the cable connections in a base station configured with three RRU3008s and three RRU3804s in the -48 V DC power supply scenario.

Figure 15-7 shows the cable connections.

Huawei Proprietary and Confidential
Copyright © Huawei Technologies Co., Ltd.

Figure 15-7 Cable connections (-48 V DC, three RRU3008s+three RRU3804s)

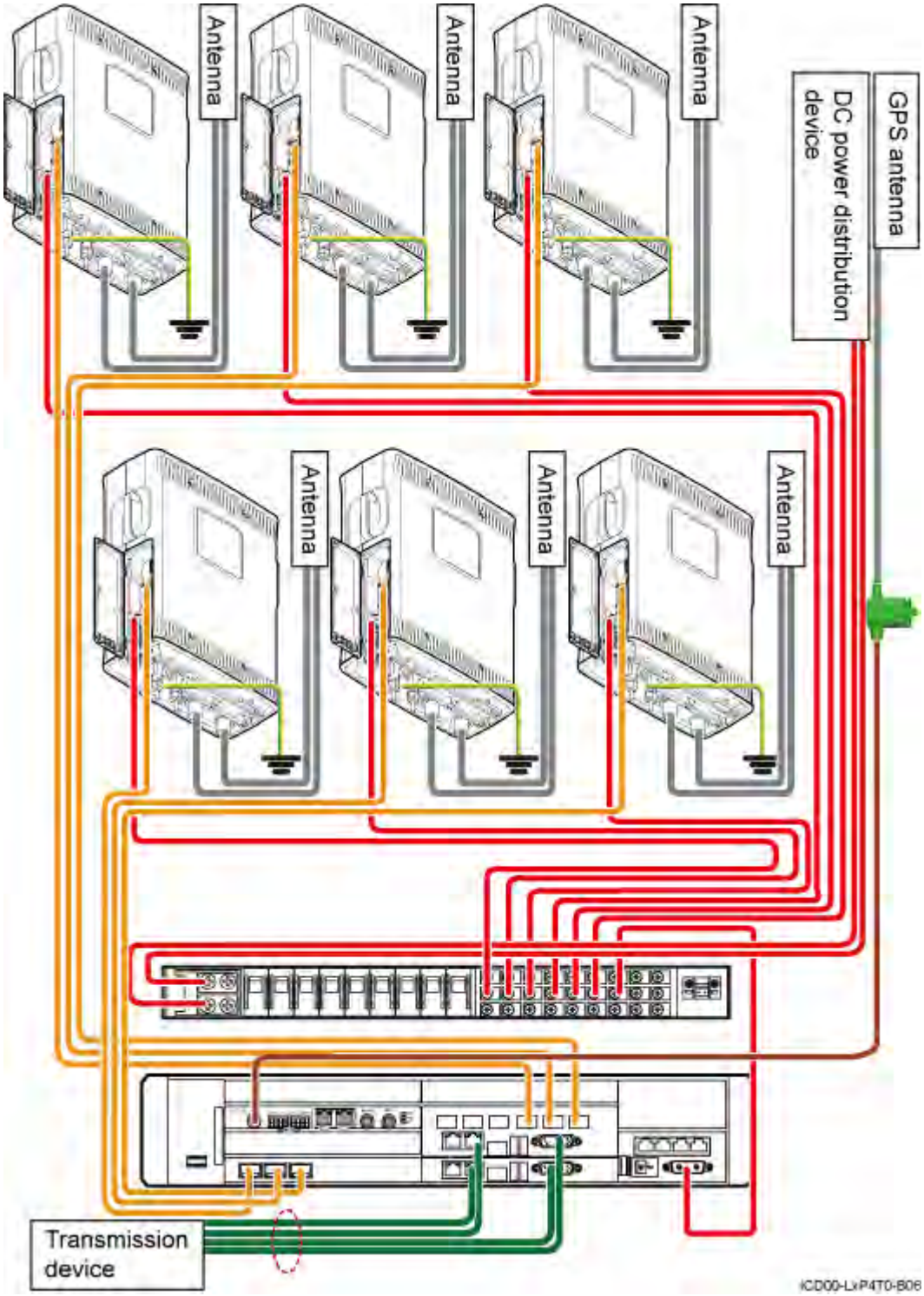

Table 15-7 describes the cables.

Copyright © Huawei Technologies Co., Ltd.

Table 15-7 Cable description

	Power cable		CPRI cable		GPS clock signal cable
	Jumper		PGND cable		E1/T1 cable or FE/GE cable

NOTE

The E1/T1 cable or FE/GE cable is used according to the on-site requirements.

15.2.7 Cable Connections (-48 V, Three RRU3908s + Three RRU3201s)

This section describes all the cable connections in the dual-mode and triple-mode scenarios when three RRU3908s and three RRU3201s are configured and the -48 V DC power supply is provided.

Cable Connections in the Dual-Mode Scenario

Figure 15-8 shows the cable connections in the dual-mode scenario.

Huawei Proprietary and Confidential
Copyright © Huawei Technologies Co., Ltd.

Figure 15-8 Cable connections in the dual-mode scenario (-48 V, three RRU3908s + three RRU3201s)

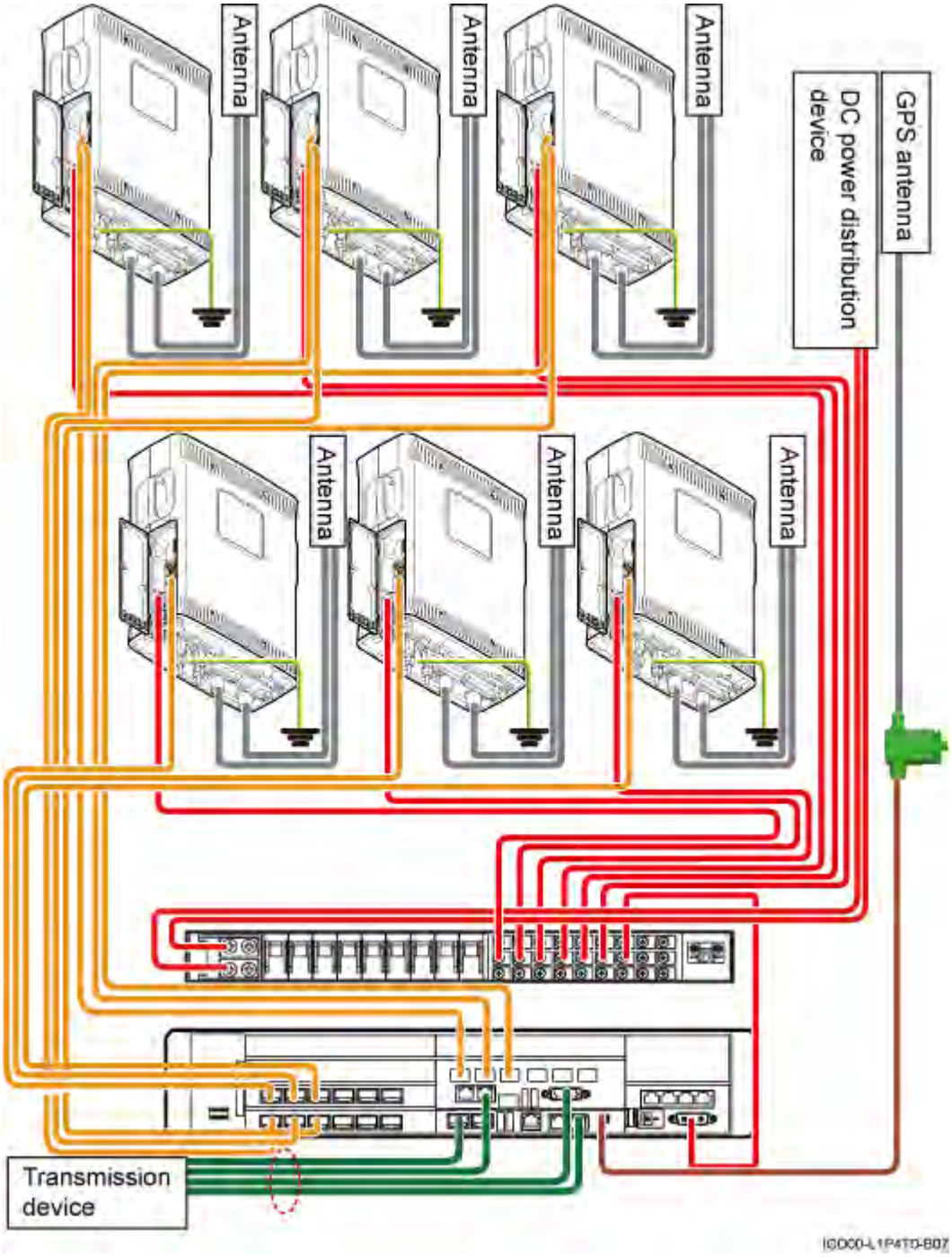

Table 15-8 lists the cables.

Table 15-8 Cable description

	Power cable		CPRI optical cable		GPS clock signal cable

Copyright © Huawei Technologies Co., Ltd.

	Jumper		PGND cable		E1/T1 cable or FE/GE cable

NOTE

The E1/T1 cable or FE/GE cable is used according to on-site requirements. Only an optical cable or Ethernet cable can be connected to a GE port on the LMPT.

Cable Connections in the Triple-Mode Scenario

Figure 15-9 shows cable connections in the triple-mode scenario.

Huawei Proprietary and Confidential
Copyright © Huawei Technologies Co., Ltd.

Figure 15-9 Cable connections in the triple-mode scenario (-48 V, three RRU3908s + three RRU3201s)

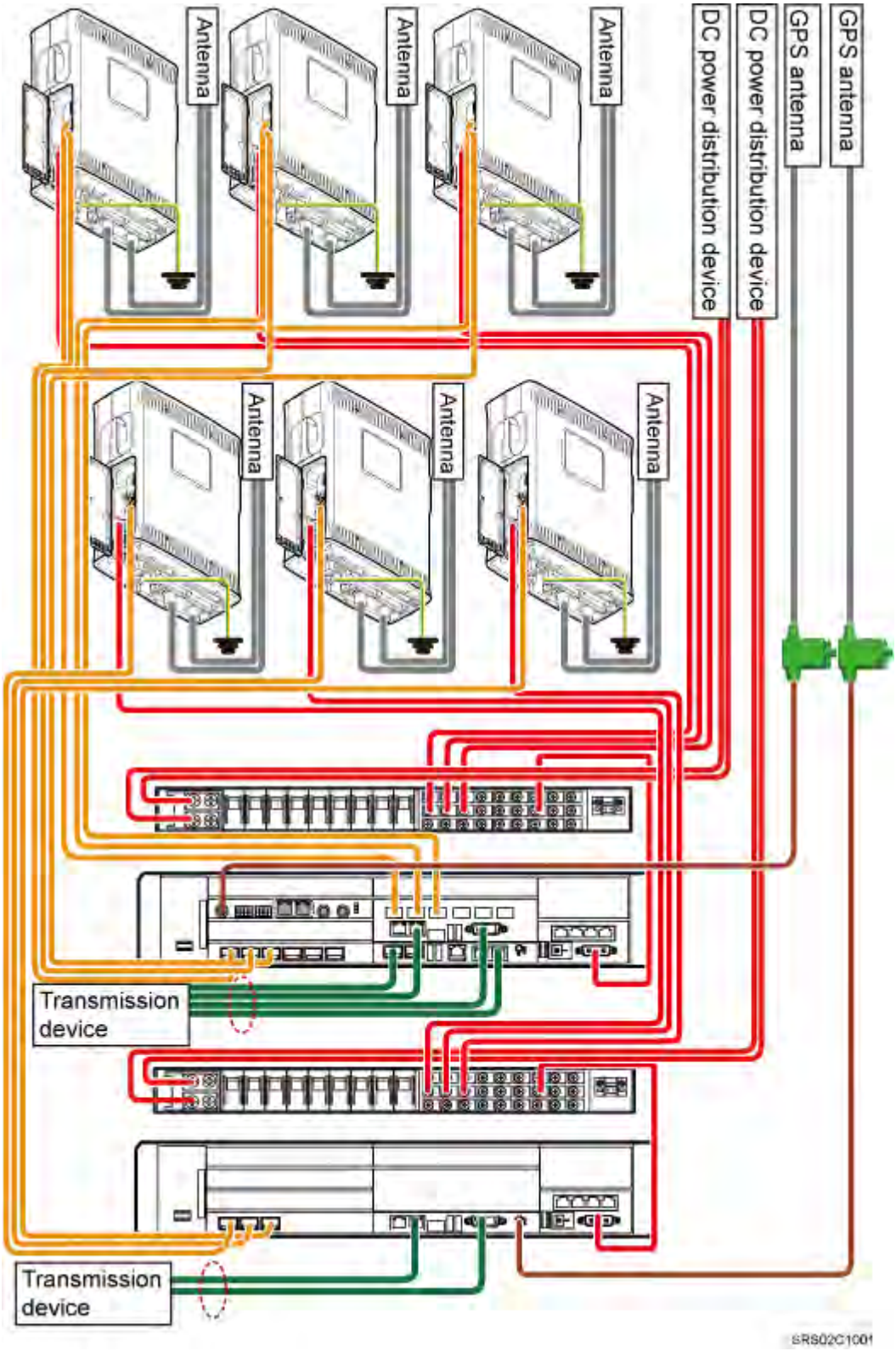

Table 15-9 lists the cables.

Copyright © Huawei Technologies Co., Ltd.

Table 15-9 Cable description

	Power cable		CPRI optical cable		GPS clock signal cable
	Jumper		PGND cable		E1/T1 cable or FE/GE cable

NOTE

The E1/T1 cable or FE/GE cable is used according to on-site requirements. Only an optical cable or Ethernet cable can be connected to a GE port on the LMPT.

15.2.8 Cable Connections (-48 V DC, Three RRU3008s+Three RRU3201s)

This section describes all the cable connections in a base station configured with three RRU3008s and three RRU3201s in the -48 V DC power supply scenario.

Figure 15-10 shows the cable connections.

Huawei Proprietary and Confidential
Copyright © Huawei Technologies Co., Ltd.

Figure 15-10 Cable connections (-48 V DC, three RRU3008s+three RRU3201s)

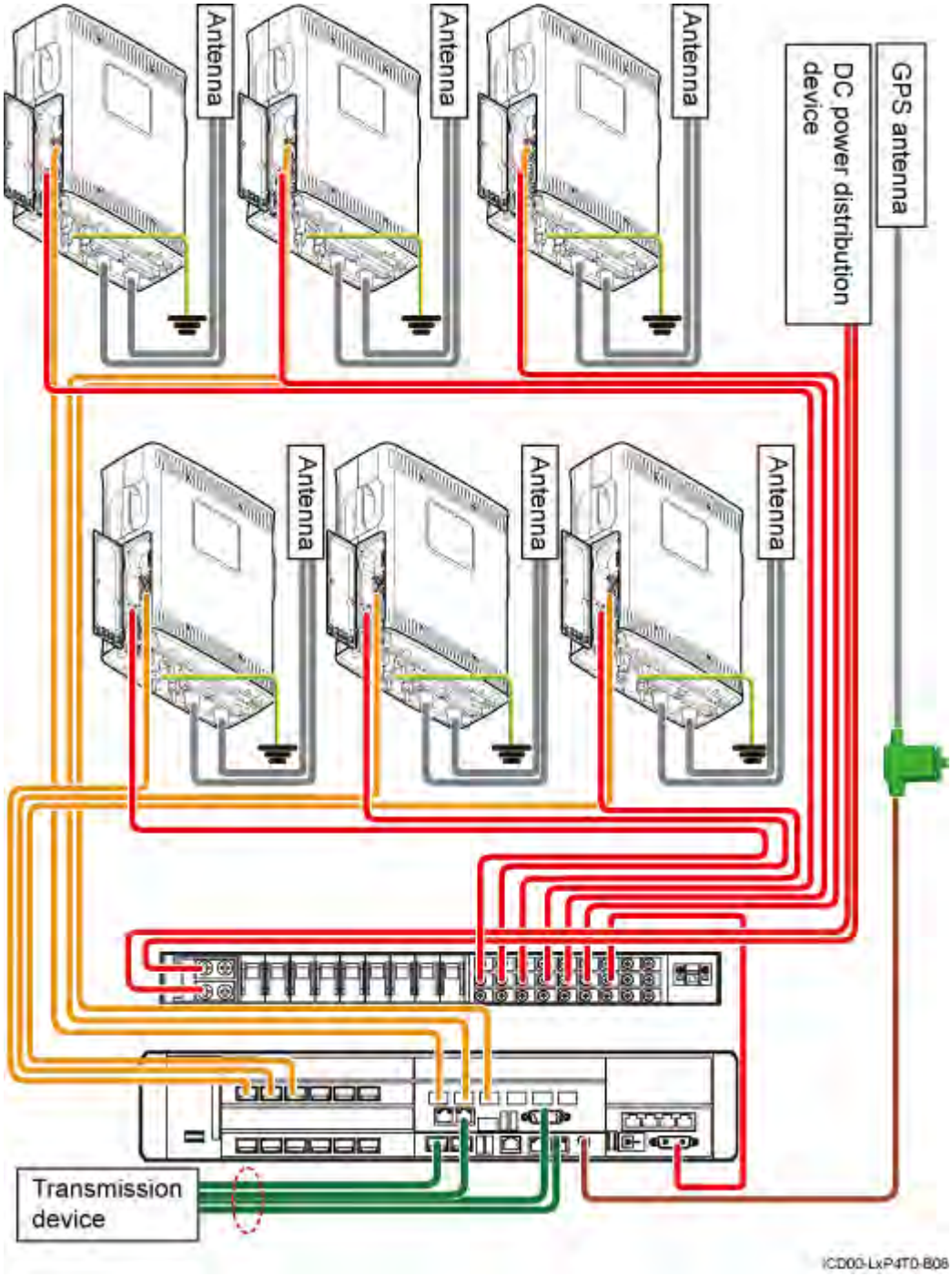

Table 15-10 describes the cables.

Table 15-10 Cable description

	Power cable		CPRI cable		GPS clock signal cable

Copyright © Huawei Technologies Co., Ltd.

	Jumper		PGND cable		E1/T1 cable or FE/GE cable

NOTE

The E1/T1 cable or FE/GE cable is used according to the on-site requirements. Only an optical cable or Ethernet cable can be connected to a GE port on the LMPT.

15.2.9 Cable Connections (-48 V DC, Three RRU3804s+Three RRU3201s)

This section describes all the cable connections in a base station configured with three RRU3804s and three RRU3201s in the -48 V DC power supply scenario.

Figure 15-11 shows the cable connections.

Huawei Proprietary and Confidential
Copyright © Huawei Technologies Co., Ltd.

Figure 15-11 Cable connections (-48 V DC, three RRU3804s+three RRU3201s)

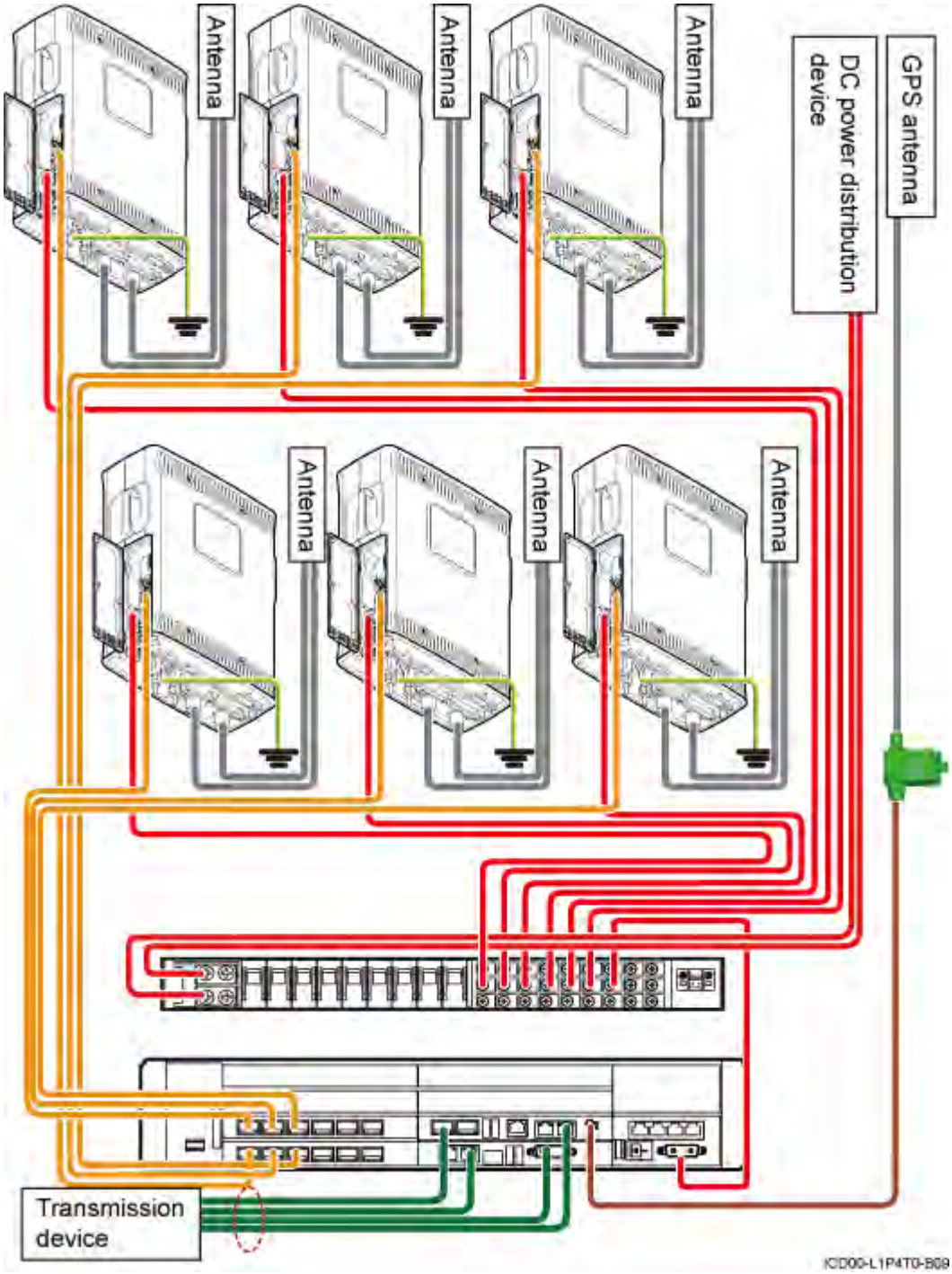

Table 15-11 describes the cables.

Table 15-11 Cable description

	Power cable		CPRI cable		GPS clock signal cable

Copyright © Huawei Technologies Co., Ltd.

	Jumper		PGND cable		E1/T1 cable or FE/GE cable

NOTE

The E1/T1 cable or FE/GE cable is used according to the on-site requirements. Only an optical cable or Ethernet cable can be connected to a GE port on the LMPT.

15.2.10 Cable Connections (-48 V DC, Six RRU3008s+Six RRU3804s)

This section describes all the cable connections in a base station configured with six RRU3008s and six RRU3804s in the -48 V DC power supply scenario.

Figure 15-12 shows the cable connections.

Huawei Proprietary and Confidential
Copyright © Huawei Technologies Co., Ltd.

Figure 15-12 Cable connections (-48 V DC, six RRU3008s+six RRU3804s)

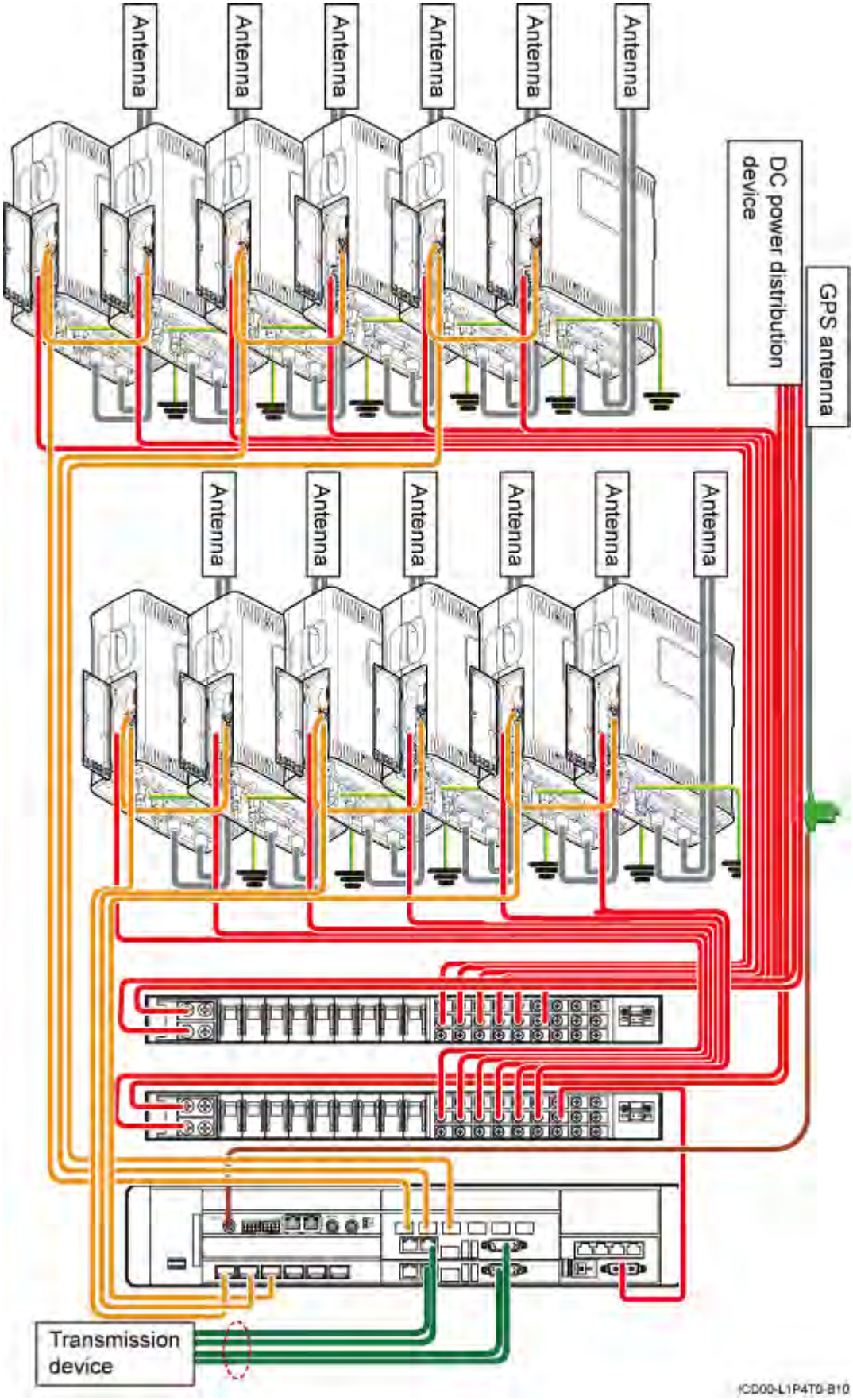

Copyright © Huawei Technologies Co., Ltd.

Table 15-12 describes the cables.

Table 15-12 Cable description

	Power cable		CPRI cable		GPS clock signal cable
	Jumper		PGND cable		E1/T1 cable or FE/GE cable

NOTE

The E1/T1 cable or FE/GE cable is used according to the on-site requirements.

15.2.11 Cable Connections (-48 V DC, Six RRU3908s+Six RRU3804s)

This section describes all the cable connections in the dual-mode and triple-mode scenarios when six RRU3908s and six RRU3804s are configured and the -48 V DC power supply is provided.

Cable Connections in the Dual-Mode Scenario

Figure 15-13 shows the cable connections in the dual-mode scenario.

Huawei Proprietary and Confidential
Copyright © Huawei Technologies Co., Ltd.

Figure 15-13 Cable connections in the dual-mode scenario (-48 V, six RRU3908s + six RRU3804s)

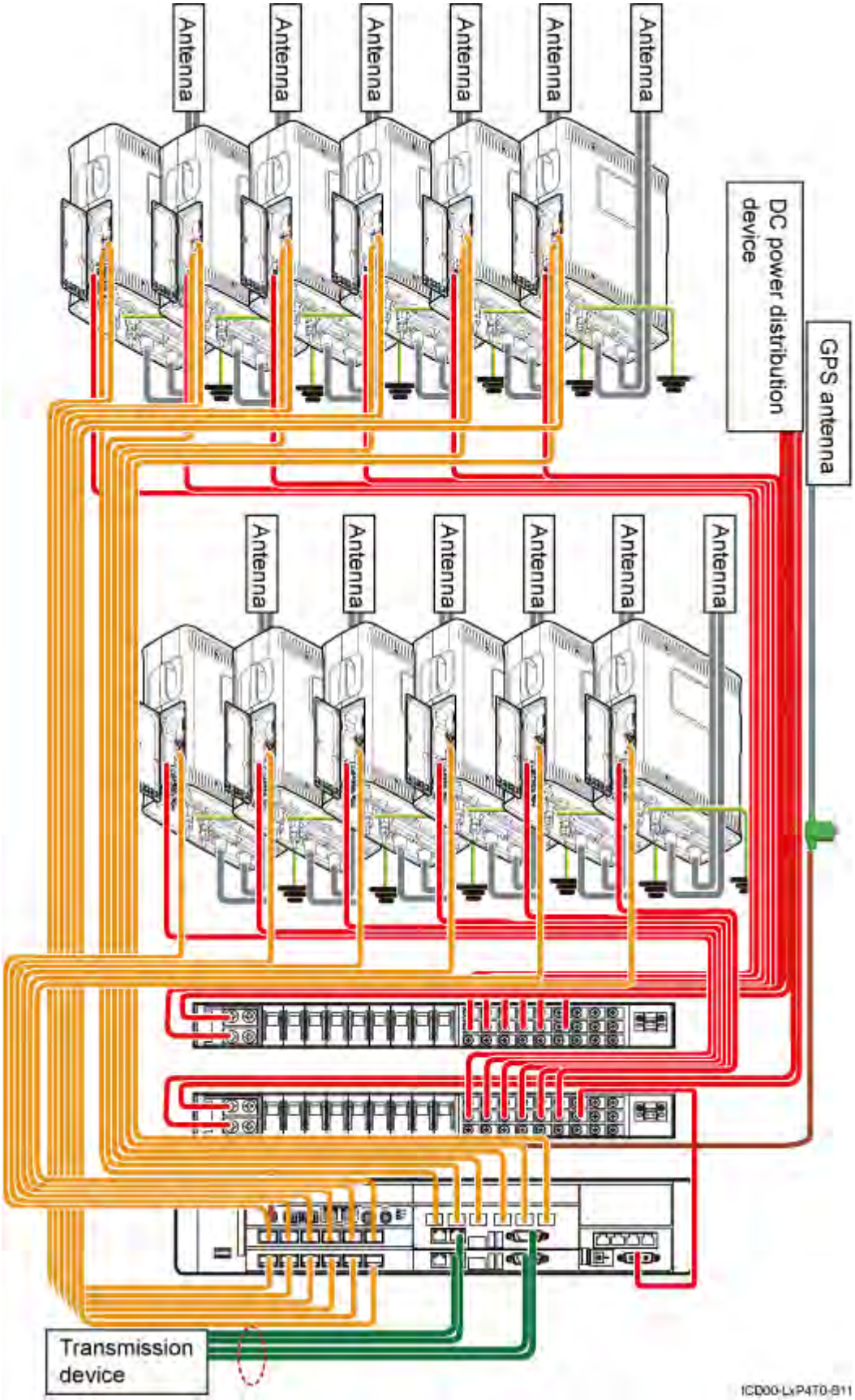

Copyright © Huawei Technologies Co., Ltd.

Table 15-13 lists the cables.

Table 15-13 Cable description

	Power cable		CPRI optical cable		GPS clock signal cable
	Jumper		PGND cable		E1/T1 cable or FE/GE cable

NOTE

The E1/T1 cable or FE/GE cable is used according to on-site requirements.

Cable Connections in the Triple-Mode Scenario

The cable connections in the triple-mode scenario consists of GSM+LTE and UMTS Only cable connections, as shown in **Figure 15-14** and **Figure 15-15**.

Huawei Proprietary and Confidential
Copyright © Huawei Technologies Co., Ltd.

Figure 15-14 Cable connections in the GSM+LTE scenario (-48 V, six RRU3908s)

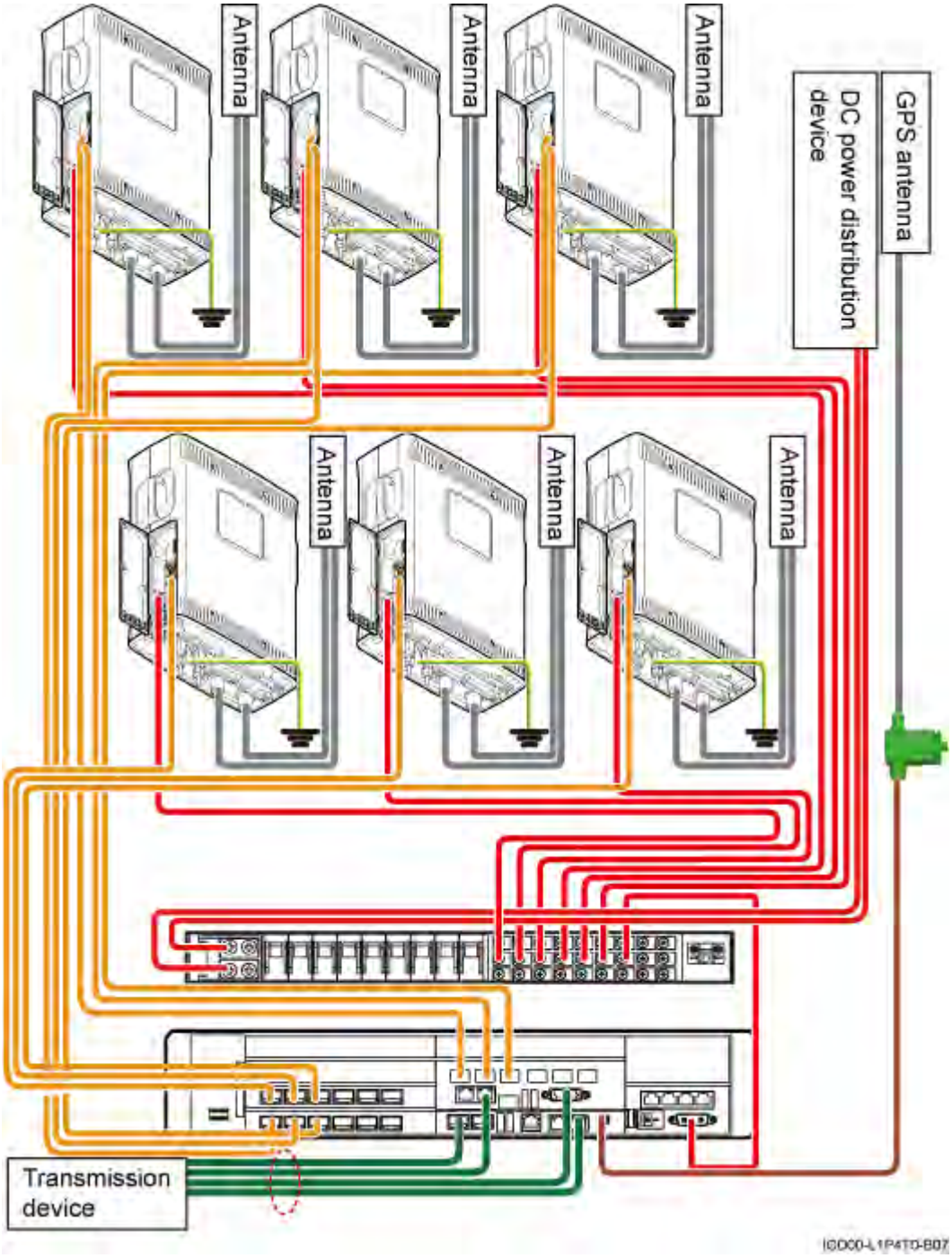

Table 15-14 lists the cables.

Table 15-14 Cable description

	Power cable		CPRI optical cable		GPS clock signal cable

Copyright © Huawei Technologies Co., Ltd.

	Jumper		PGND cable		E1/T1 cable or FE/GE cable

NOTE

The E1/T1 cable or FE/GE cable is used according to on-site requirements. Only an optical cable or Ethernet cable can be connected to a GE port on the LMPT.

Figure 15-15 Cable connections in the UMTS Only scenario (-48 V, six RRU3804s)

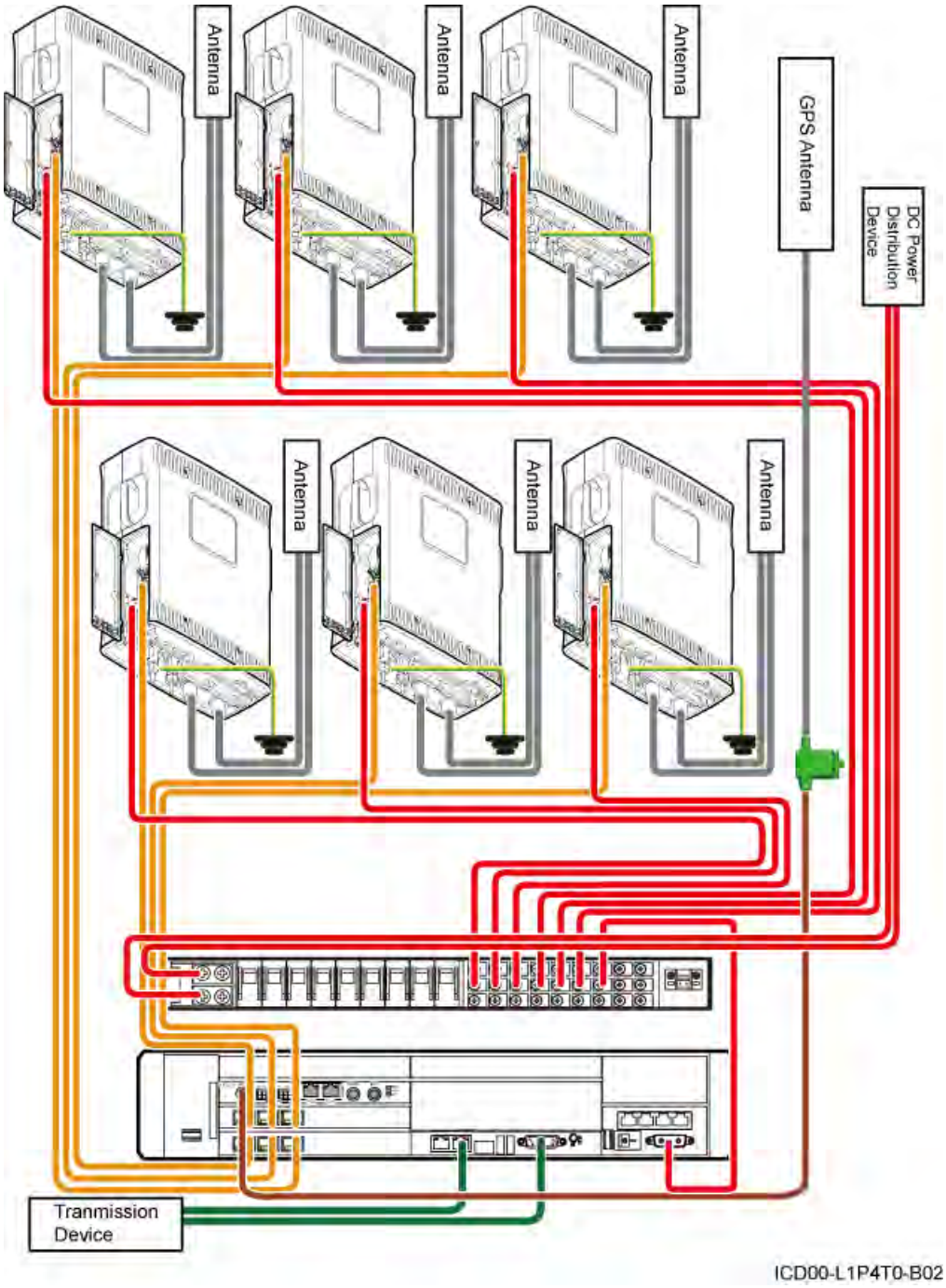

Copyright © Huawei Technologies Co., Ltd.

Table 15-15 lists the cables.

Table 15-15 Cable description

	Power cable		CPRI optical cable		GPS clock signal cable
	Jumper		PGND cable		E1/T1 cable or FE/GE cable

NOTE

The E1/T1 cable or FE/GE cable is used according to on-site requirements.

15.2.12 Cable Connections (-48 V DC, Six RRU3908s+Six RRU3201s)

This section describes all the cable connections in the dual-mode and triple-mode scenarios when six RRU3908s and six RRU3201s are configured and the -48 V DC power supply is provided.

Cable Connections in the Dual-Mode Scenario

Figure 15-16 shows the cable connections in the dual-mode scenario.

Copyright © Huawei Technologies Co., Ltd.

Figure 15-16 Cable connections in the dual-mode scenario (-48 V, six RRU3908s + six RRU3201s)

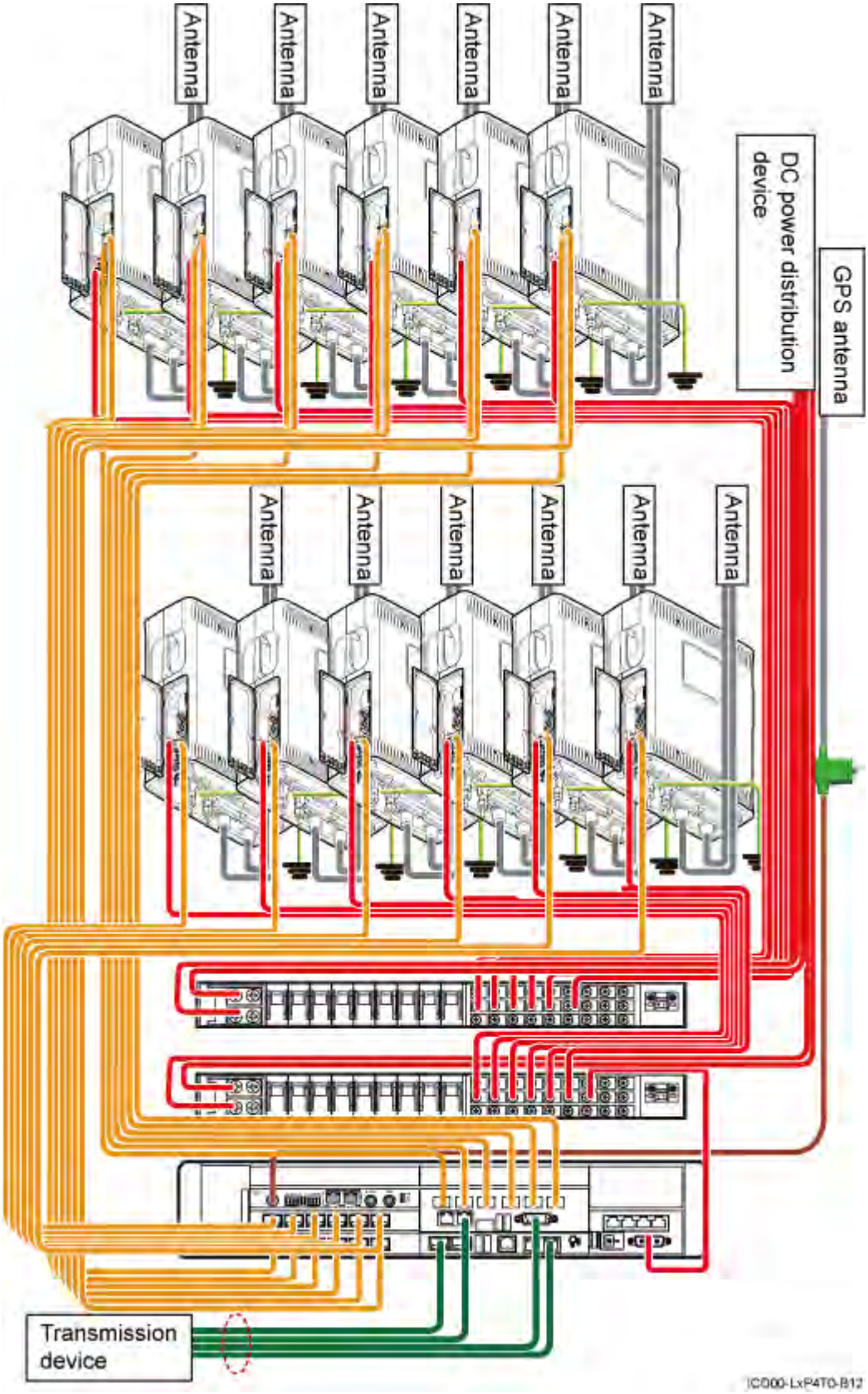

Copyright © Huawei Technologies Co., Ltd.

Table 15-16 lists the cables.

Table 15-16 Cable description

	Power cable		CPRI optical cable		GPS clock signal cable
	Jumper		PGND cable		E1/T1 cable or FE/GE cable

NOTE

The E1/T1 cable or FE/GE cable is used according to on-site requirements. Only an optical cable or Ethernet cable can be connected to a GE port on the LMPT.

Cable Connections in the Triple-Mode Scenario

The cable connections in the triple-mode scenario consists of GSM+UMTS and LTE Only cable connections, as shown in **Figure 15-17** and **Figure 15-18**.

Copyright © Huawei Technologies Co., Ltd.

Figure 15-17 Cable connections in the GSM+UMTS Only scenario (-48 V DC, six RRU3908s)

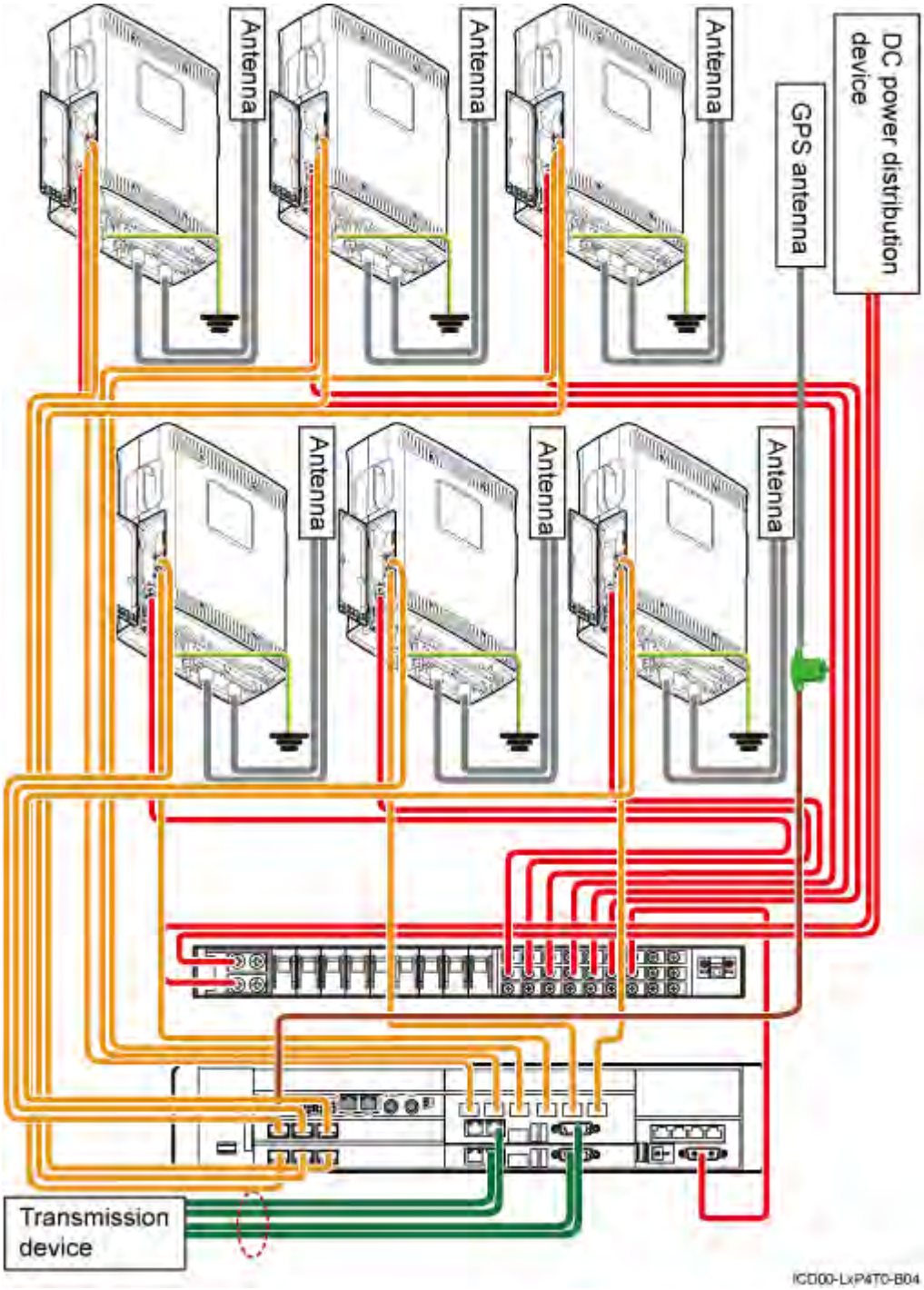

Table 15-17 lists the cables.

Table 15-17 Cable description

	Power cable		CPRI optical cable		GPS clock signal cable

Huawei Proprietary and Confidential
Copyright © Huawei Technologies Co., Ltd.

	Jumper		PGND cable		E1/T1 cable or FE/GE cable

NOTE

The E1/T1 cable or FE/GE cable is used according to on-site requirements.

Copyright © Huawei Technologies Co., Ltd.

Figure 15-18 Cable connections in the LTE Only scenario (-48 V DC, six RRU3201s)

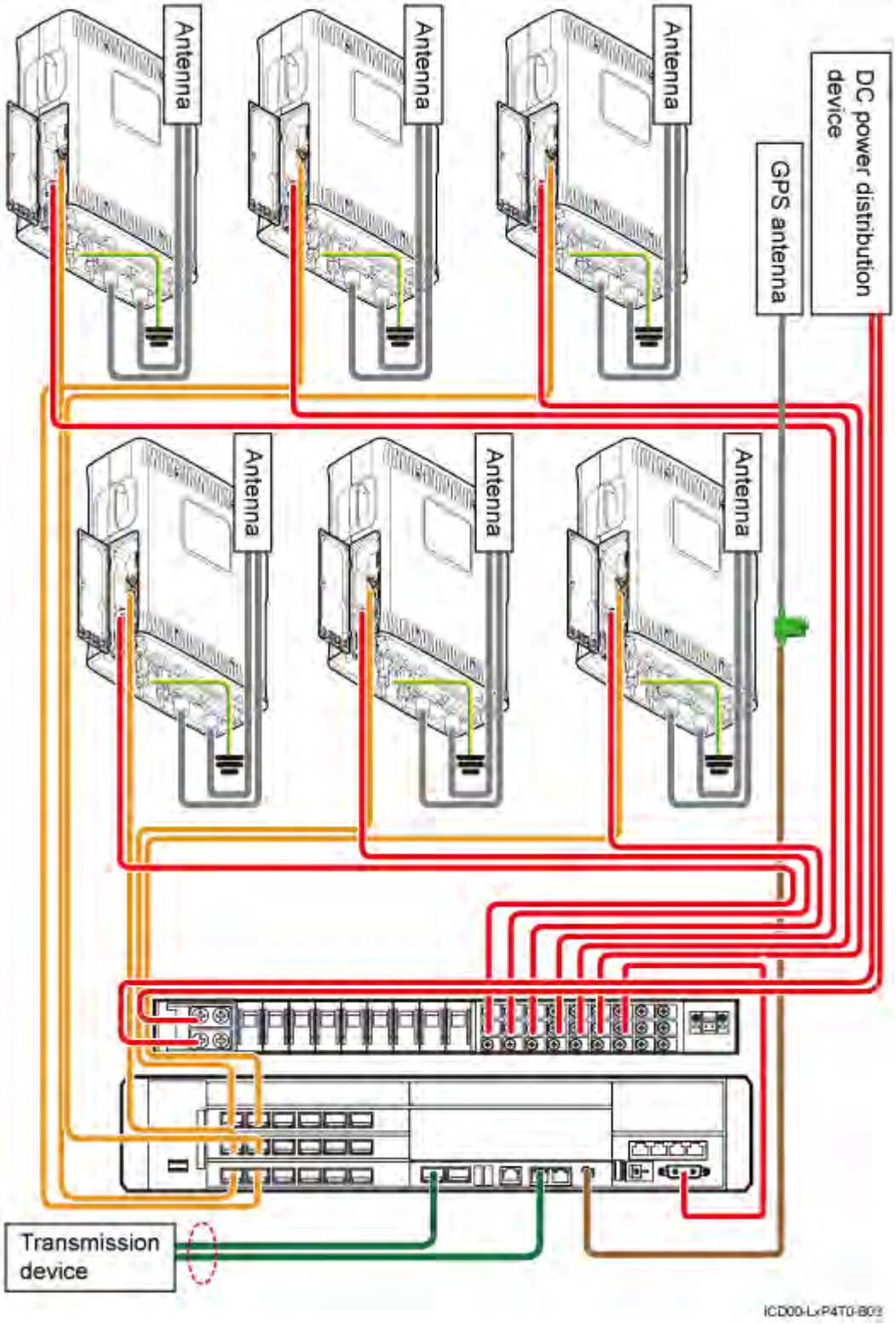

Table 15-18 lists the cables.

Copyright © Huawei Technologies Co., Ltd.

Table 15-18 Cable description

	Power cable		CPRI optical cable		GPS clock signal cable
	Jumper		PGND cable		E1/T1 cable or FE/GE cable

NOTE

Only an optical cable or Ethernet cable can be connected to a GE port on the LMPT.

15.2.13 Cable Connections (-48 V DC, Six RRU3008s+Six RRU3201s)

This section describes all the cable connections in a base station configured with six RRU3008s and six RRU3201s in the -48 V DC power supply scenario.

Figure 15-19 shows the cable connections.

Copyright © Huawei Technologies Co., Ltd.

Figure 15-19 Cable connections (-48 V DC, six RRU3008s+six RRU3201s)

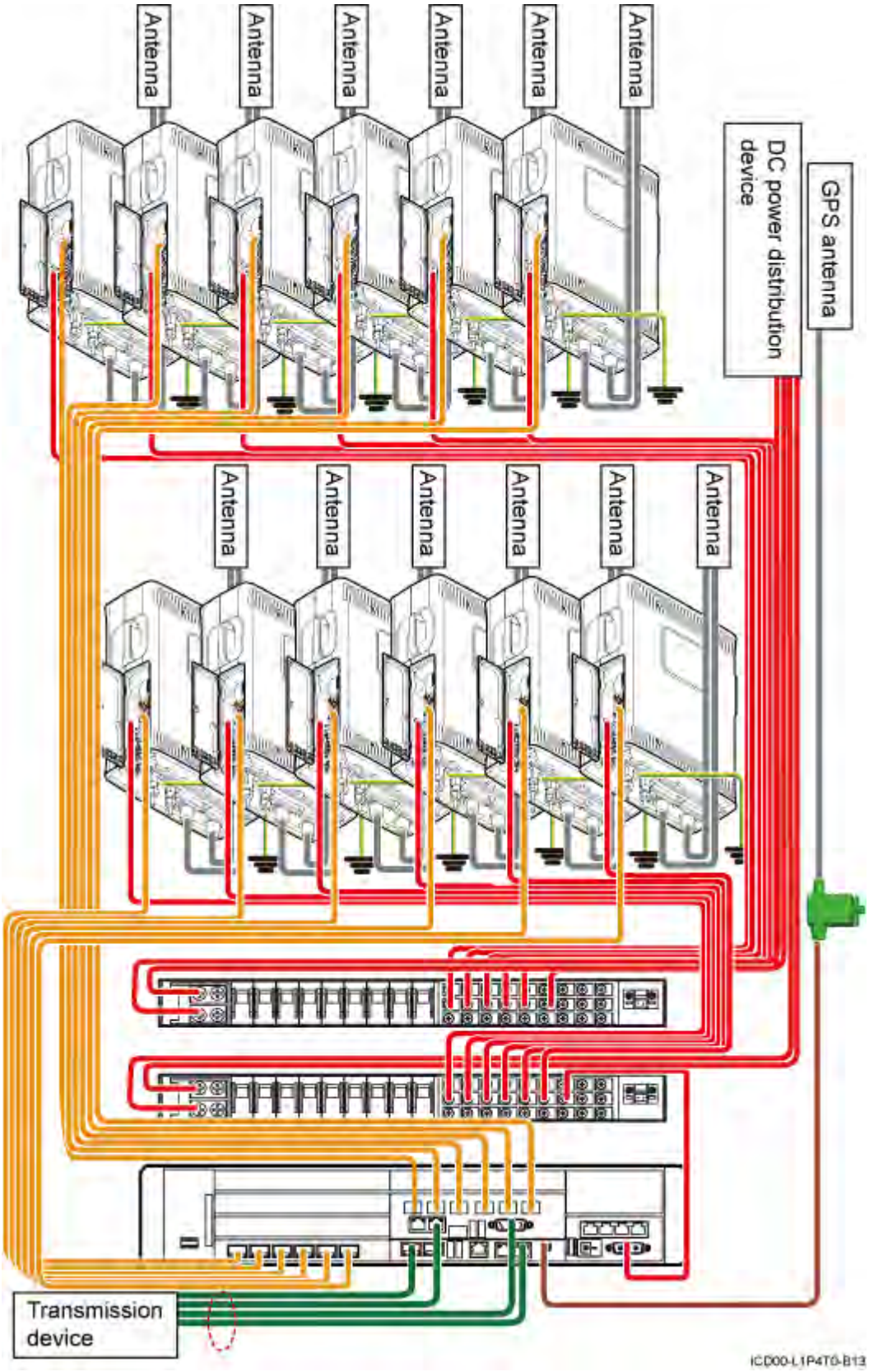

Table 15-19 describes the cables.

Copyright © Huawei Technologies Co., Ltd.

Table 15-19 Cable description

	Power cable		CPRI cable		GPS clock signal cable
	Jumper		PGND cable		E1/T1 cable or FE/GE cable

NOTE

The E1/T1 cable or FE/GE cable is used according to the on-site requirements. Only an optical cable or Ethernet cable can be connected to a GE port on the LMPT.

15.2.14 Cable Connections (-48 V DC, Six RRU3804s+Six RRU3201s)

This section describes all the cable connections in a base station configured with six RRU3804s and six RRU3201s in the -48 V DC power supply scenario.

Figure 15-20 shows the cable connections.

Copyright © Huawei Technologies Co., Ltd.

Figure 15-20 Cable connections (-48 V DC, six RRU3804s+six RRU3201s)

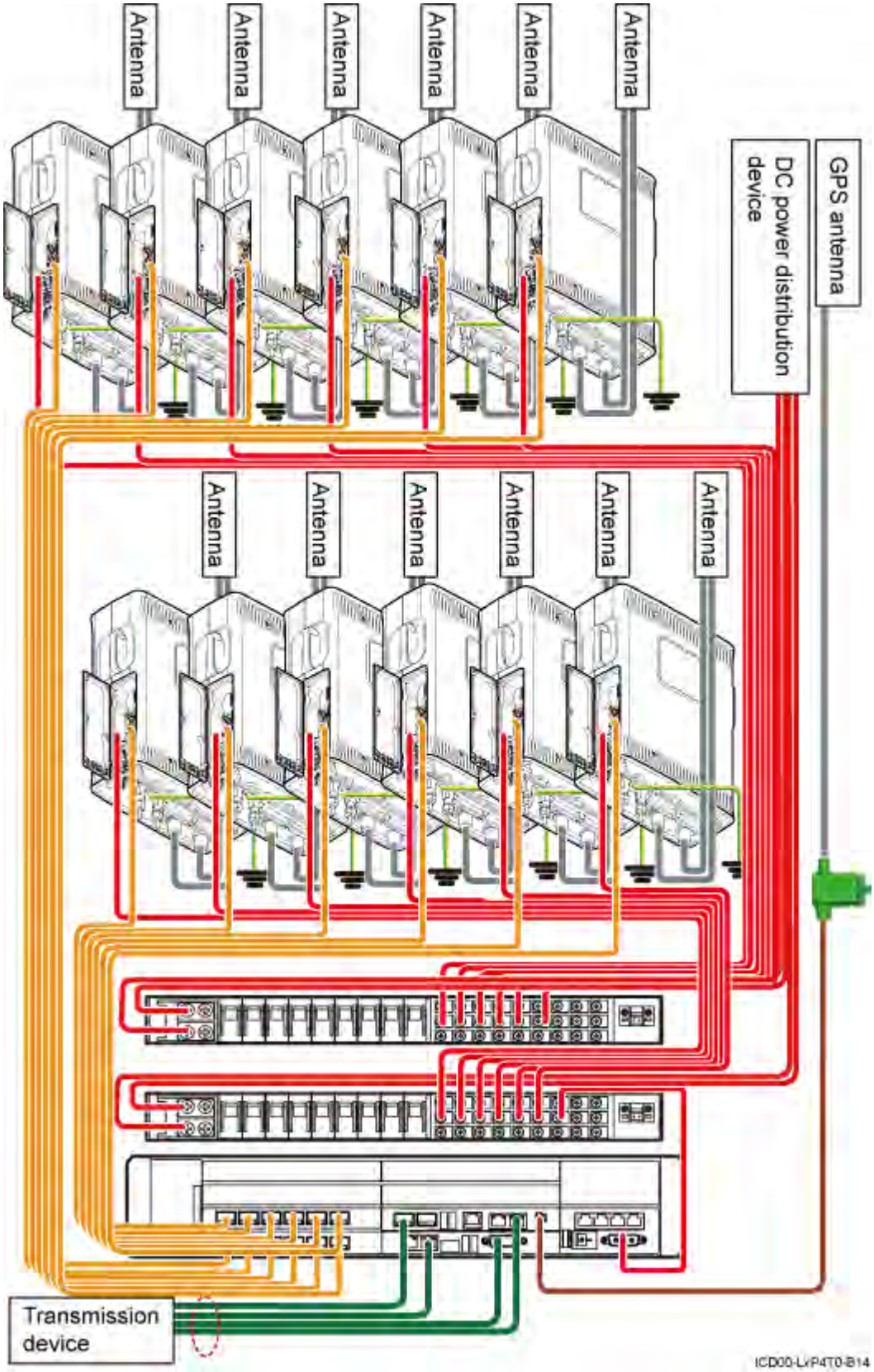

Table 15-20 describes the cables.

Copyright © Huawei Technologies Co., Ltd.

Table 15-20 Cable description

	Power cable		CPRI cable		GPS clock signal cable
	Jumper		PGND cable		E1/T1 cable or FE/GE cable

NOTE

The E1/T1 cable or FE/GE cable is used according to the on-site requirements. Only an optical cable or Ethernet cable can be connected to a GE port on the LMPT.

15.2.15 Cable Connections (AC RRU)

This section describes all the cable connections for the only one RRU configured in a base station with AC power supply.

Figure 15-21 shows the cable connections.

Figure 15-21 Cable connections (AC RRU)

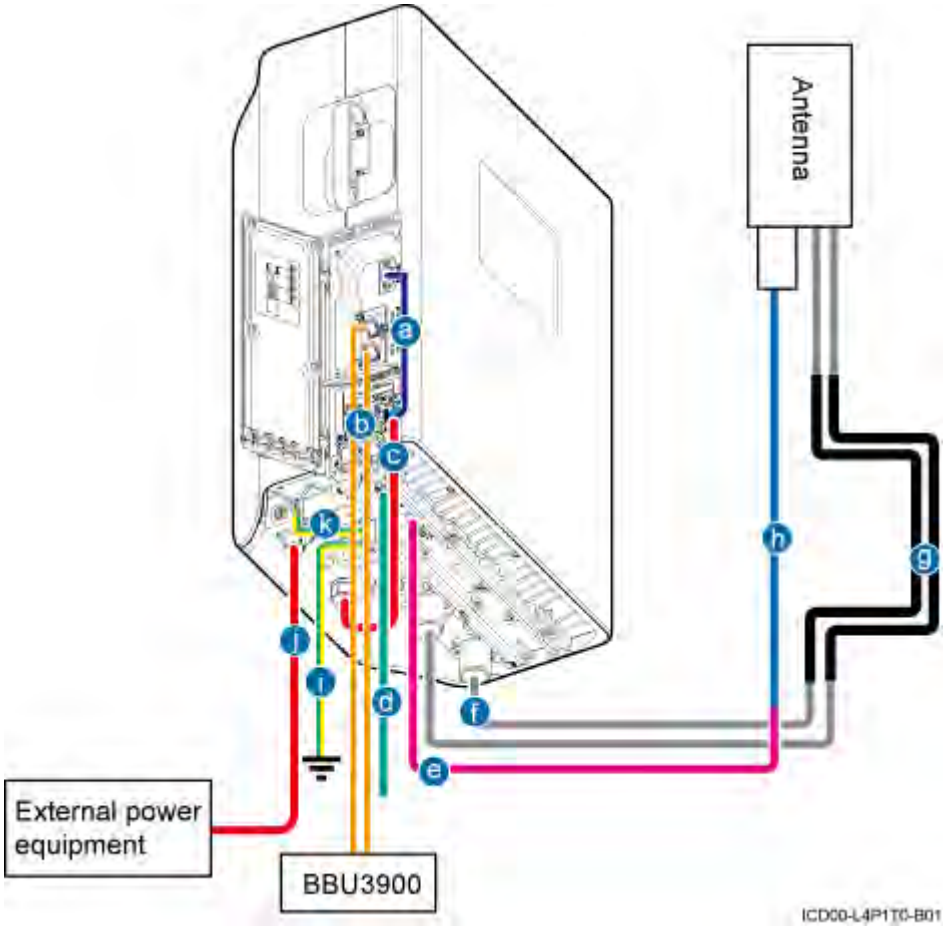

Table 15-21 describes the cables.

Copyright © Huawei Technologies Co., Ltd.

Table 15-21 Cable description

SN	Cable
a	Monitoring signal cable for the AC RRU
b	CPRI optical cable
c	Power cable for the DC RRU
d	Inter-RRU RF signal cable
e	AISG multi-wire cable for the RRU
f	RF jumper for the RRU
g	Feeder
h	Extended AISG cable for the RRU
i	PGND cable
j	Power cable for the AC RRU
k	Equipotential cable

15.2.16 Cable Connections (220 V AC)

This section describes the cable connections for the power equipment (AC/DC) in a base station with 220 V AC power supply.

NOTE

The cable connections for the RRUs in the 220 V AC and -48 V DC power supply scenarios are the same. For details, see **15.2 Cable Connections**.

Figure 15-22 shows the cable connections.

Huawei Proprietary and Confidential
Copyright © Huawei Technologies Co., Ltd.

Figure 15-22 Cable connections (220 V AC)

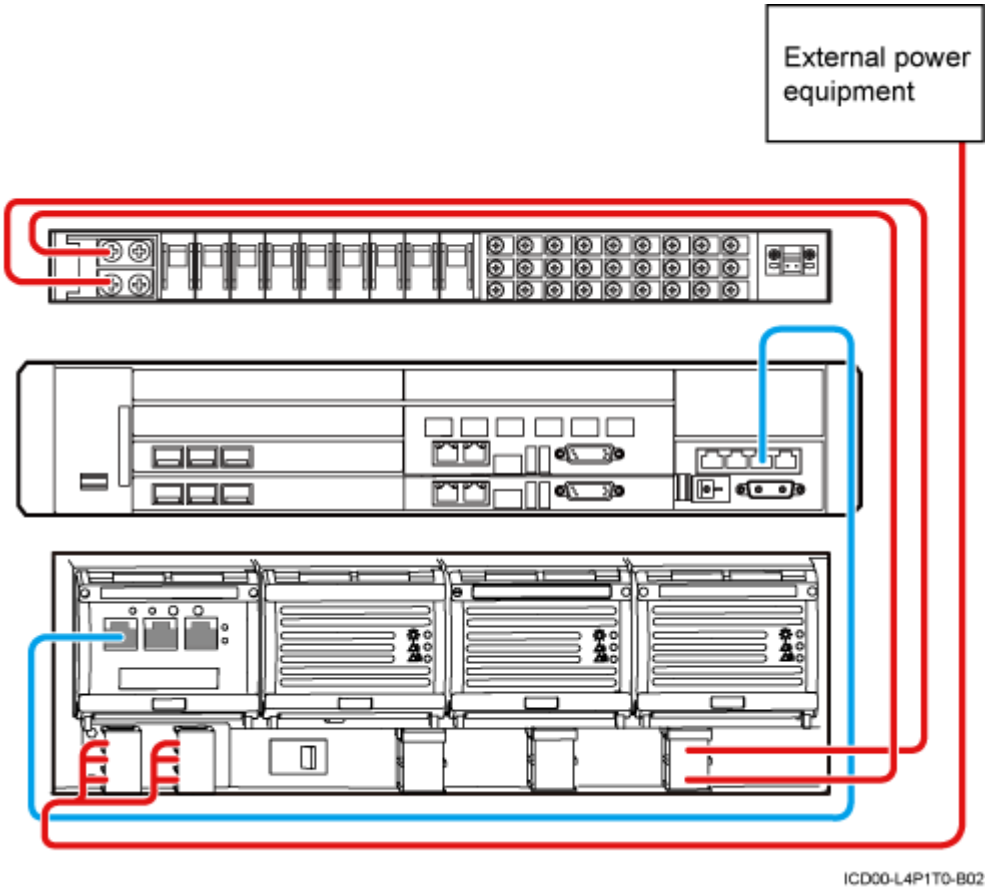

15.2.17 Cable Connections (+24 V DC)

This section describes the cable connections for the power equipment (DC/DC) in a base station with +24 V DC power supply.

NOTE

The cable connections for the RRUs in the +24 V DC and -48 V DC power supply scenarios are the same. For details, see **15.2 Cable Connections**.

Figure 15-23 shows the cable connections.

Copyright © Huawei Technologies Co., Ltd.

Figure 15-23 Cable connections (+24 V DC)

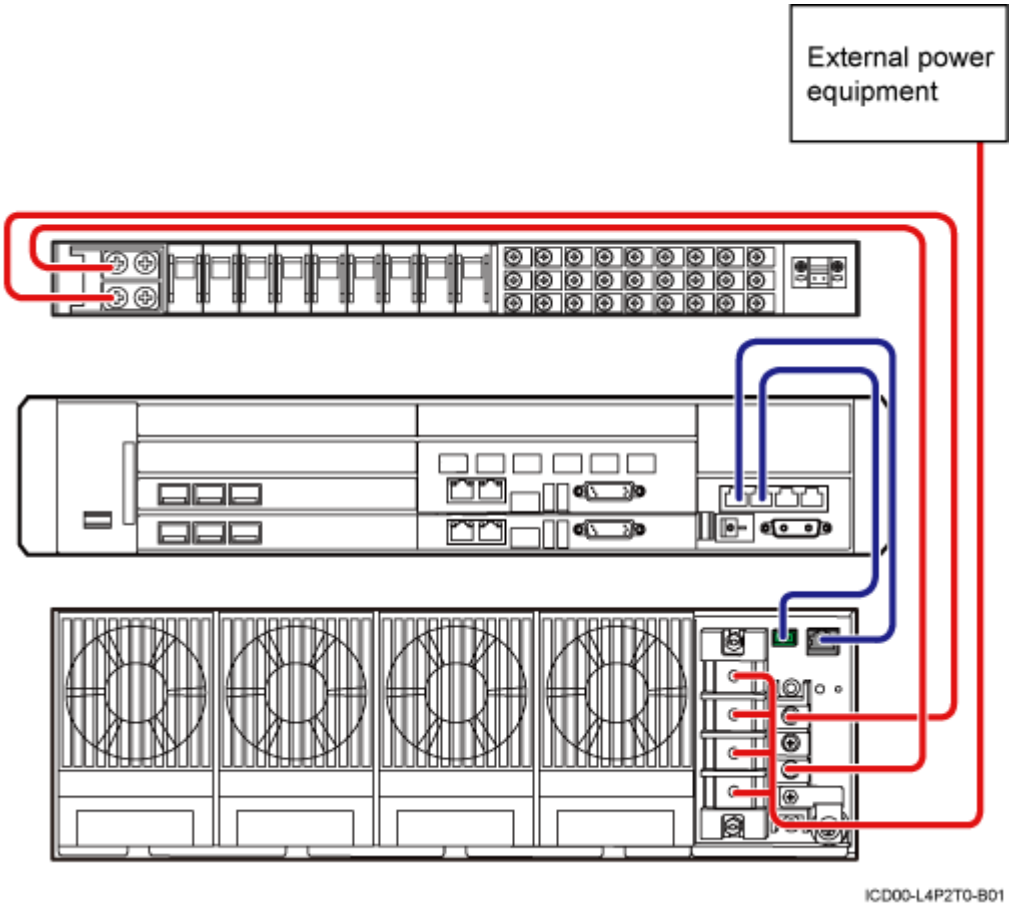

15.3 Cable Installation Process

This section describes the process of installing the ICR-related cables.

Process of Installing the ICR-Related Cables

Figure 15-24 shows the cable installation process.

Huawei Proprietary and Confidential
Copyright © Huawei Technologies Co., Ltd.

Figure 15-24 Process of installing the ICR-related cables

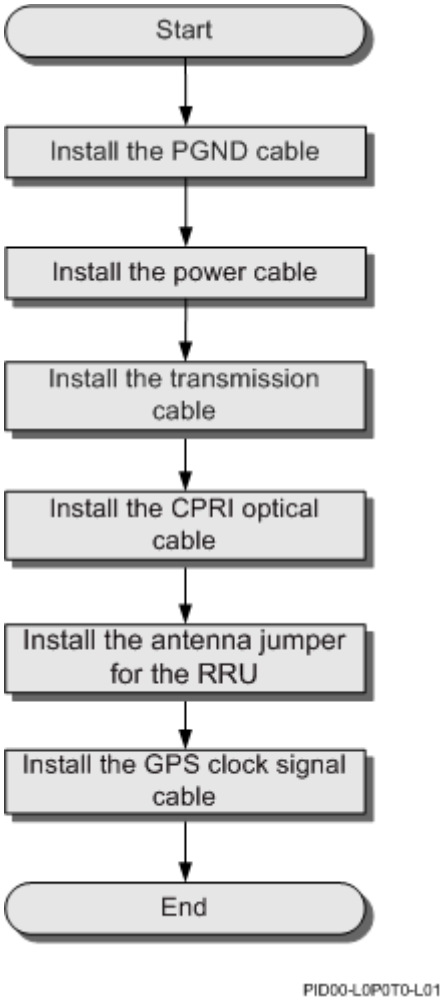

15.4 Cable Routes

This section describes the cable routes.

Figure 15-25 shows the plan view of the cable rack. By studying the figure, you can know the cable routes.

Copyright © Huawei Technologies Co., Ltd.

Figure 15-25 Cable routes

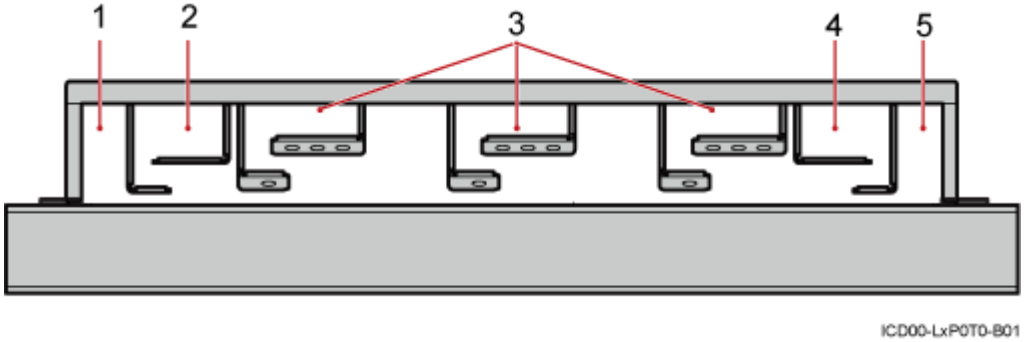

(1) -48 V DC or 220 V AC input power cable	(2) Optical cable and PGND cable for the RRU in the lower part	(3) Feeder
(4) Power cable for the RRU and E1 cable	(5) +24 V DC input power cable	-

15.5 Installing the PGND Cable for the RRU

This section describes the procedure for installing the PGND cable for the RRU.

Context

The cross-section area of the PGND cable for the RRU is 16 mm^2.

Procedure

- Installing the PGND cable for the DC RRU
  1. Prepare the PGND cable.
     (1) Cut the cables to proper lengths based on the actual cable route.
     (2) Add OT terminals to both ends of the cable.
  2. Connect one end of the PGND cable to the RRU.
  3. Connect the other end to the ground bar on the IFS06.

     NOTE

     When installing the PGND cable, keep the crimping tube of the OT terminal in the correct direction.

Huawei Proprietary and Confidential
Copyright © Huawei Technologies Co., Ltd.

Figure 15-26 Connections of the PGND cables for the DC RRU

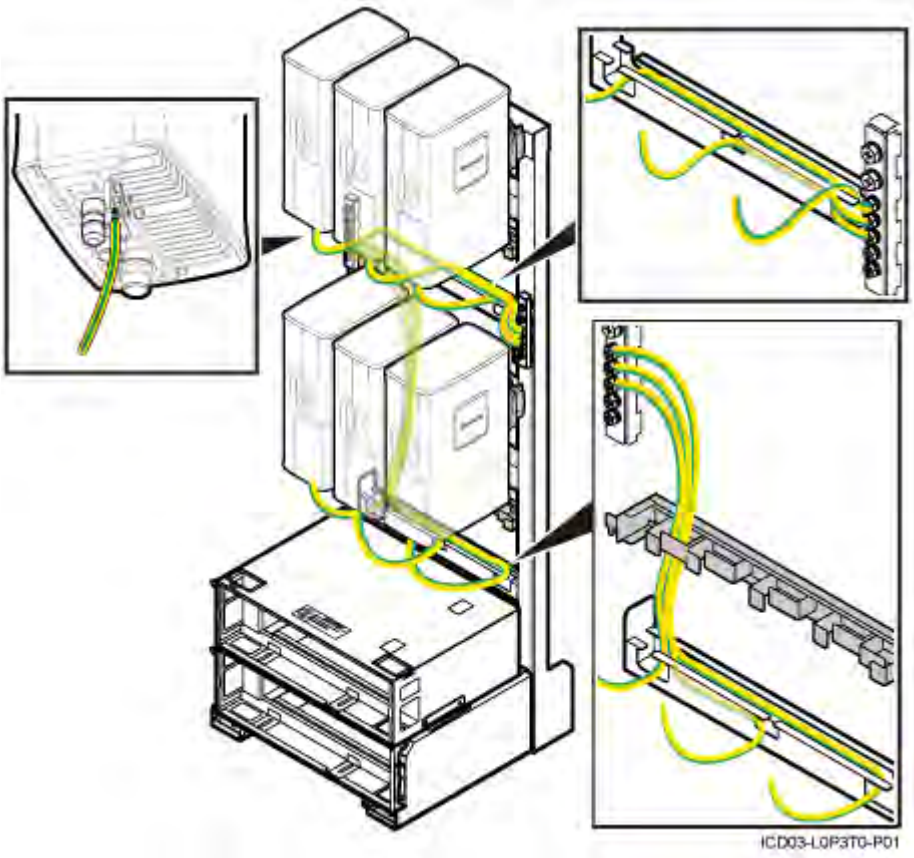

4. Route cables by referring to **15.1 Cabling Requirements**.
5. Use cable ties to bind cables.
6. Label the installed cables by referring to Attaching a Sign Plate Label.

- Installing the PGND cable for the AC RRU
  1. Prepare the PGND cable.
     (1) Cut the cables to proper lengths based on the actual cable route.
     (2) Add OT terminals to both ends of the cable.
  2. Connect one end of the PGND cable to the RRU.
  3. Connect the other end to the ground bar on the IFS06.

     NOTE

     When installing the PGND cable, keep the crimping tube of the OT terminal in the correct direction.

Copyright © Huawei Technologies Co., Ltd.

Figure 15-27 Connections of the PGND cables for the AC RRU

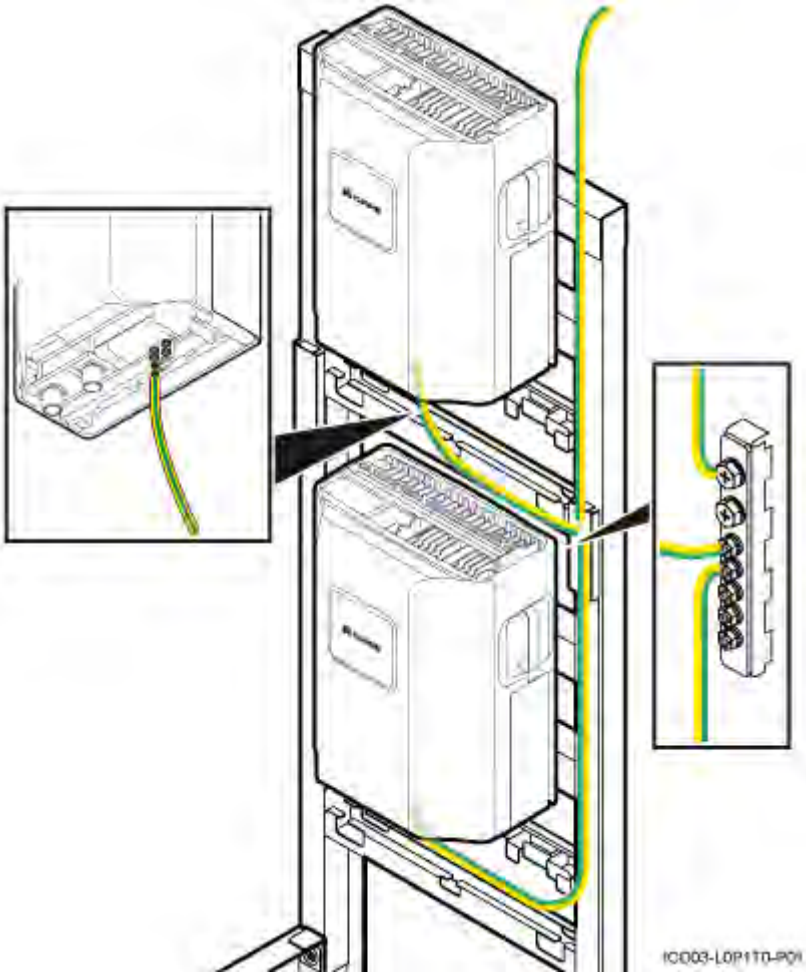

4. Route cables by referring to **15.1 Cabling Requirements**.
5. Use cable ties to bind cables.
6. Label the installed cables by referring to Attaching a Sign Plate Label.

----End

15.6 Installing the Power Cable for the BBU

This section describes the installation of the power cable for the BBU.

Context

The cross-section area of the power cable for the BBU is 1.5 mm^2.

Procedure

Step 1 Add an OT terminal to the power cable for the BBU. For details, see Assembling the OT Terminal and the Power Cable.

Huawei Proprietary and Confidential
Copyright © Huawei Technologies Co., Ltd.

NOTE

The 3V3 power connector is added to the power cable for the BBU before delivery, and you must add OT terminals at the other end.

Step 2 Install the power cable for the BBU, as shown in **Figure 15-28**.

1. Link the 3V3 power connector at one end of the power cable for the BBU to the PWR port on the UPEU in the BBU, and then tighten the screws on the connector until the tightening torque reaches 0.25 N·m.
2. Link the OT terminals on the blue and black wires at the other end to the wiring terminals labeled NEG(-) and RTN(+) near the LOAD6 label on the DCDU-03B respectively.

Figure 15-28 Installing the power cable for the BBU

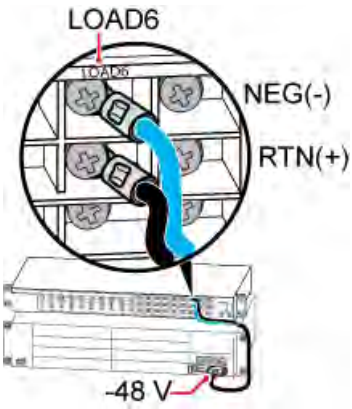

Step 3 Route cables by referring to **15.1 Cabling Requirements**.

Step 4 Use cable ties to bind cables.

Step 5 Label the installed cables by referring to Attaching an L-Shaped Label.

----End

15.7 Installing the Input Power Cable

This section describes the installation of the input power cable.

Context

You must select the corresponding procedure according to the types of input power cable, which are -48 V DC, +24 V DC, and 220 V AC input power cables.

The cross-section area of the input power cable is as follows:

- 16 mm^2 for -48 V DC.
- 25 mm^2 for +24 V DC.
- 6 mm^2 for 220 V AC three-phase.
- 2.5 mm^2 for 220 V AC single-phase.

Copyright © Huawei Technologies Co., Ltd.

Procedure

- Installing the -48 V DC input power cable
  1. Prepare the power cable.
     (1) Cut the cable to the required length based on the actual cable route.
     (2) Add OT terminals to both ends of the cable.
  2. Connect one end of the power cable to the wiring terminals labeled **RTN(+)** and **NEG (-)** on the DCDU-03B, as shown in 2 of **Figure 15-29**.
  3. Connect the other end of the cable to the external power equipment after routing the cable along the cable trough at the left-back of the IFS06, as shown in 1 of **Figure 15-29**.
  4. Route cables by referring to **15.1 Cabling Requirements**.
  5. Use cable ties to bind cables.
  6. Label the installed cables by referring to Attaching an L-Shaped Label.
- Installing the +24 V DC input power cable
  1. Prepare the power cable.
     (1) Cut the cable to the required length based on the actual cable route.
     (2) Add OT terminals to both ends of the cable.
  2. Connect one end of the power cable to the wiring terminals labeled **+** and **-** on the power equipment (DC/DC), as shown in 6 of **Figure 15-29**.
  3. Connect the other end of the cable to the external power equipment after routing the cable along the cable trough at the left-back of the IFS06, as shown in 1 of **Figure 15-29**.
  4. Route cables by referring to **15.1 Cabling Requirements**.
  5. Use cable ties to bind cables.
  6. Label the installed cables by referring to Attaching an L-Shaped Label.
- Installing the 220 V AC input power cable
  1. Prepare the power cable.
     (1) Cut the cable to the required length based on the actual cable route.
     (2) Add OT terminals to both ends of the cable.
  2. Connect one end of the power cable to the port labeled **RS232/RS485** on the power equipment (AC/DC), as shown in 5 of **Figure 15-29**.
     - For details about the connections of the 220 V AC single-phase input power cable, see 3 in **Figure 15-29**.
     - For details about the connections of the 220 V AC three-phase input power cable, see 4 in **Figure 15-29**.
  3. Connect the other end of the cable to the external power equipment after routing the cable along the cable trough at the left-back of the IFS06, as shown in 1 of **Figure 15-29**.
  4. Route cables by referring to **15.1 Cabling Requirements**.
  5. Use cable ties to bind cables.
  6. Label the installed cables by referring to Attaching a Sign Plate Label.

Huawei Proprietary and Confidential
Copyright © Huawei Technologies Co., Ltd.

Figure 15-29 Installing the input power cable

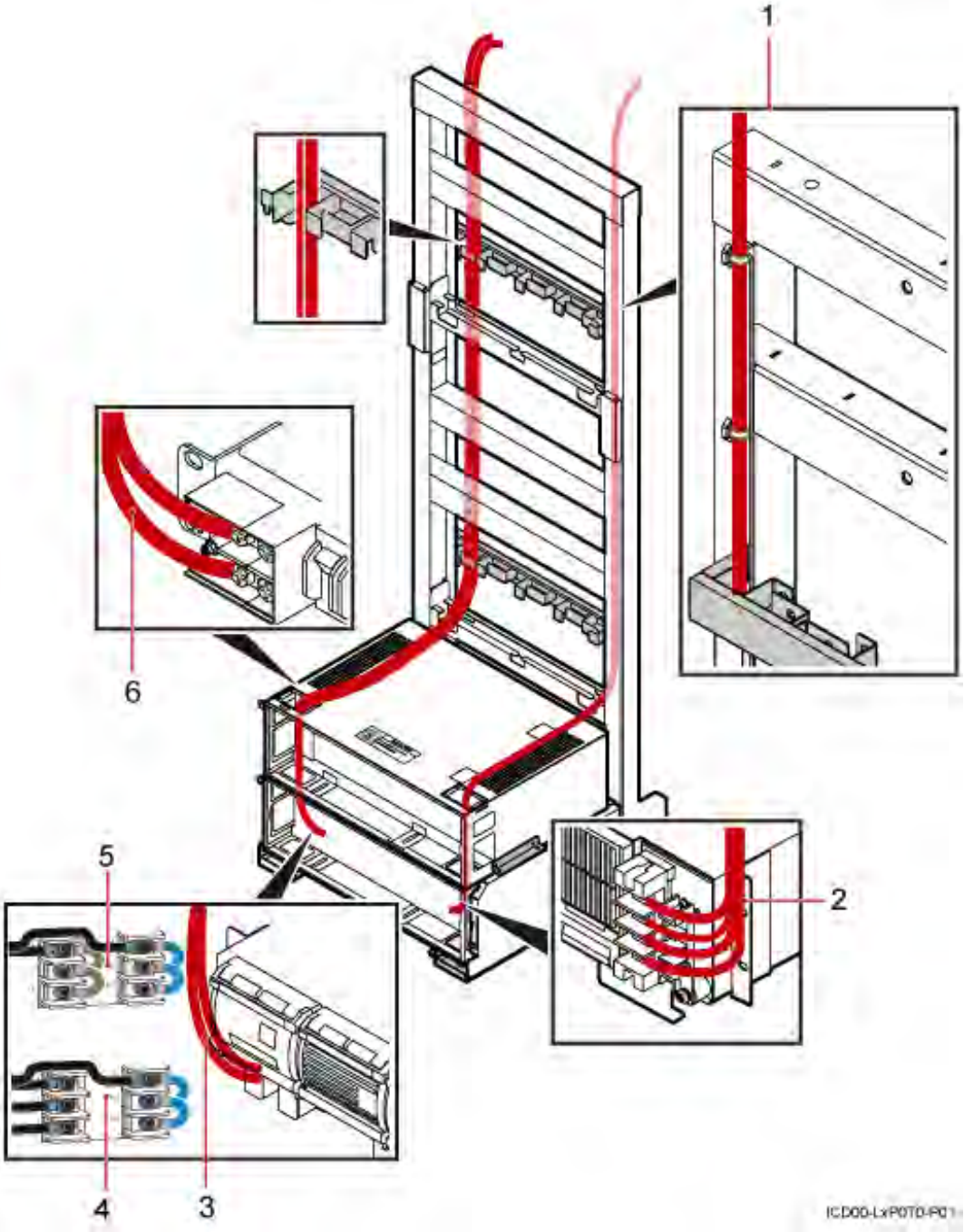

(1) Back view	(2) Input power cable for the DCDU	(3) Connections of the 220 V AC single-phase input power cable
(4) Connections of the 220 V AC three-phase input power cable	(5) Input power cable for the power equipment (AC/DC)	(6) Input power cable for the power equipment (DC/DC)

----End

Copyright © Huawei Technologies Co., Ltd.

15.8 (Optional) Installing the Power Cable and Monitoring Signal Cable for the DCDU

This section describes the procedure for installing the power cable and monitoring signal cable.

Context

The cross-section area of the power cable for the DCDU is 25 mm^2.

In the 220 V AC and +24 V DC power supply scenario, the power cable needs to be installed between the power equipment and the DCDU, and the monitoring signal cable needs to be installed between the power equipment and the BBU.

NOTE

In the -48 V DC power supply scenario, the power cable is connected to the DCDU directly, and the monitoring signal cable is connected to the BBU directly.

Procedure

- Installing the power cable and monitoring signal cable for the DCDU in the +24 V DC power supply scenario
  1. Prepare the power cable.
     (1) Cut the cable to the required length based on the actual cable route.
     (2) Add OT terminals to both ends of the cable.
  2. Connect one end of the power cable to the wiring terminals labeled **LOAD(-)** and **RTN(+)** on the power equipment (DC/DC).
  3. Connect the other end to the wiring terminals labeled **NEG(-)** and **RTN(+)** on the DCDU.
  4. Connect one end of the monitoring signal cable for the PSU to the **ALM0** port on the UPEU.
  5. Connect the other end to the **ALM** port on the power equipment (DC/DC).
  6. Connect one end of the in-position signal cable for the PSU to the **ALM1** port on the UPEU.
  7. Connect the other end to the **PRESENT** port on the power equipment (DC/DC).

     The red cable in **Figure 15-30** is the power cable, and the blue cable is the monitoring signal cable.

Huawei Proprietary and Confidential
Copyright © Huawei Technologies Co., Ltd.

Figure 15-30 Installing the power cable and monitoring signal cable (+24 V DC)

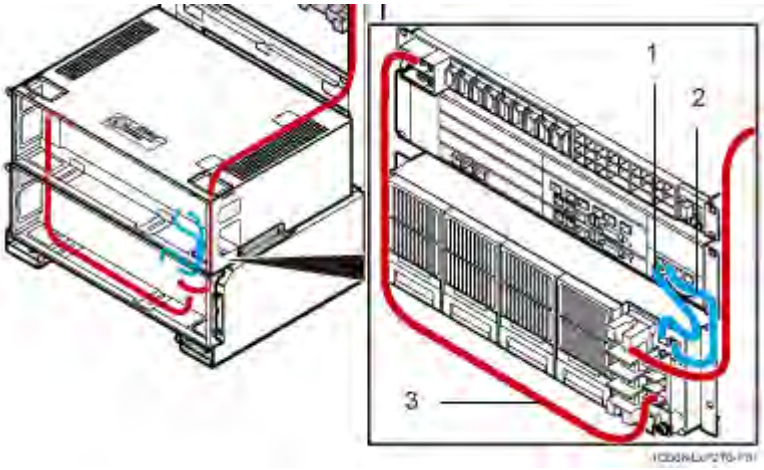

(1) In-position signal cable for the PSU (2) Monitoring signal cable for the PSU (3) Power cable for the DCDU

8. Route cables by referring to **15.1 Cabling Requirements**.
9. Use cable ties to bind cables.
10. Label the installed cables by referring to Attaching an L-Shaped Label.

- Installing the power cable and monitoring signal cable for the DCDU in the 220 V AC power supply scenario

1. Prepare the power cable.
   (1) Cut the cable to the required length based on the actual cable route.
   (2) Add OT terminals to both ends of the cable.
2. Connect one end of the power cable to the wiring terminals labeled **LOAD1(-)/ LOAD2(-)** and **RTN(+)** on the power equipment (AC/DC).
3. Connect the other end to the wiring terminals labeled **NEG(-)** and **RTN(+)** on the DCDU.
4. Connect one end of the monitoring signal cable to the **MON0** port on the UPEU.
5. Connect the other end to the **RS232/RS485** port on the power equipment (AC/DC).

   The red cable in **Figure 15-31** is the power cable, and the blue cable is the monitoring signal cable.

Copyright © Huawei Technologies Co., Ltd.

Figure 15-31 Installing the power cable and monitoring signal cable (220 V AC)

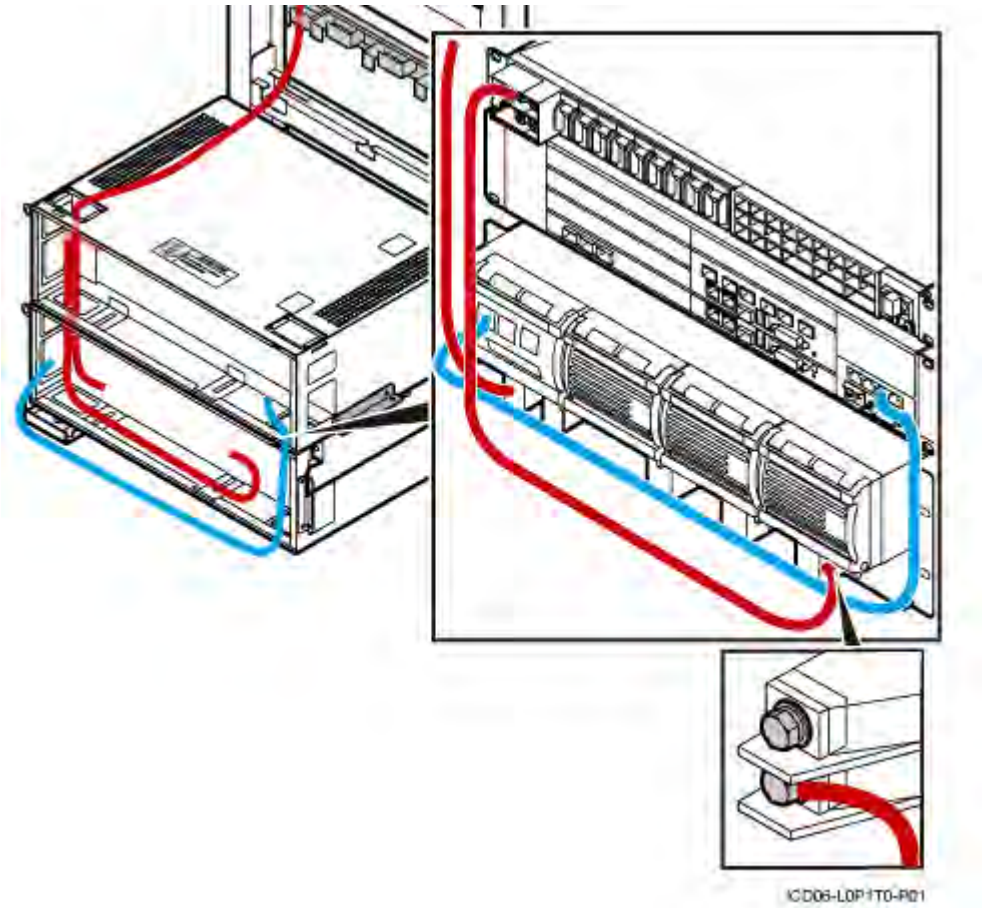

6. Route cables by referring to **15.1 Cabling Requirements**.
7. Use cable ties to bind cables.
8. Label the installed cables by referring to Attaching an L-Shaped Label.

----End

15.9 Installing the Power Cable for the RRU

This section describes the installation of the power cable for the RRU.

Context

- The cross-section area of the power cable for the DC RRU is 3.3 mm^2, which complies with the North American standard.
- The cross-section area of the power cable for the DC RRU is 4 mm^2, which complies with the European standard.

Procedure

- Installing the power cable for the DC RRU
  1. Prepare the power cable.
     (1) Cut the cable to the required length based on the actual cable route.

Huawei Proprietary and Confidential
Copyright © Huawei Technologies Co., Ltd.

(2) Add OT terminals to both ends of the cable.

2. Link the OT terminal of the blue power cable for the DC RRU to the **NEG(-)0** port in the cabling cavity of the RRU.
3. Link the OT terminal of the black cable to the **RTN(+)0** port.
4. Connect the other end of the power cable for the DC RRU to the **LOAD0** to **LOAD5** port on the DCDU.

CAUTION

The OT terminals are linked differently for different types of RRU. For details, see **Figure 15-32**.

Figure 15-32 Connections of the power cable for the DC RRU

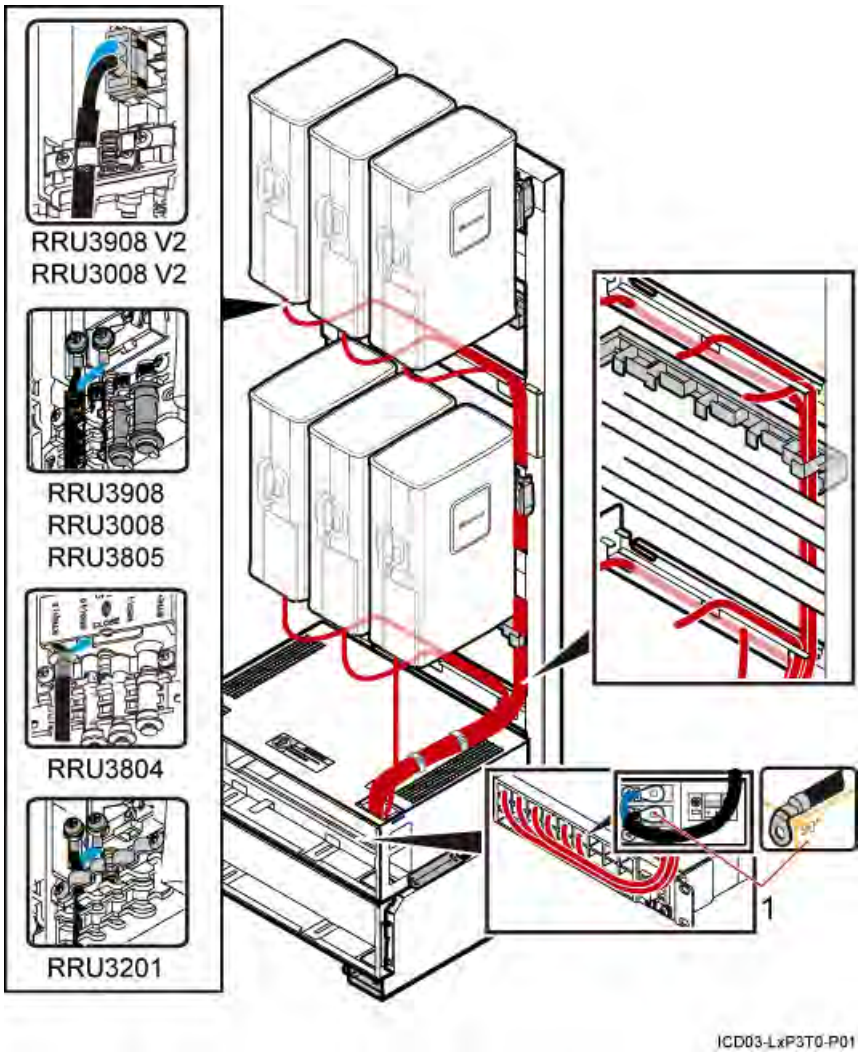

(1) OT terminals bent by 90°

TIP

Copyright © Huawei Technologies Co., Ltd.

It is recommended that the OT terminals on the power cable for the RRU be installed on the DCDU in the sequence from right to left.

5. Route cables by referring to **15.1 Cabling Requirements**.
6. Use cable ties to bind cables.

CAUTION

When routing the power cable for the RRU on the top of the IMB03, ensure that the holes for heat dissipation are not covered.

7. Label the installed cables by referring to Attaching a Sign Plate Label.

- Installing the power cable for the AC RRU
  1. Connect one end of the input power cable to the **AC IN** port at the bottom of the AC RRU.
  2. Connect the other end to the external power equipment.

     Figure 15-33 shows the cable route.

Huawei Proprietary and Confidential
Copyright © Huawei Technologies Co., Ltd.

Figure 15-33 Connections of the power cable for the AC RRU

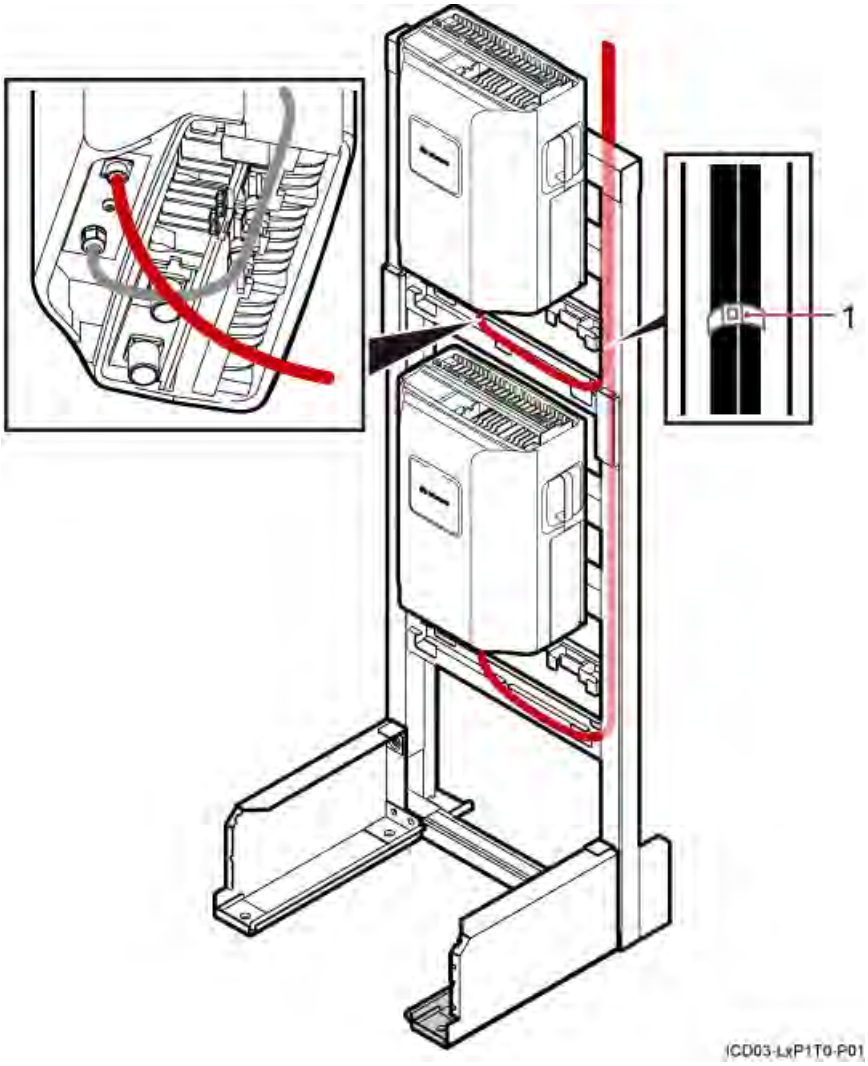

(1) Cable tie

3. Route cables by referring to **15.1 Cabling Requirements**.
4. Use cable ties to bind cables.
5. Label the installed cables by referring to Attaching a Sign Plate Label.

----End

15.10 Installing the E1/T1 Cable (FE/GE Cable or FE/GE Optical Cable)

This section describes the installation of the E1/T1 cable, FE/GE cable, and FE/GE optical cable. The FE/GE cable and FE/GE optical cable are optional. The following description is based on the installation of the E1/T1 cable.

Copyright © Huawei Technologies Co., Ltd.

Context

One end of the FE/GE cable is connected to the **FE0** port on the WMPT/GTMU or **FE/GE** port on the LMPT, and one end of the FE/GE optical cable is connected to the **SFP** port on the LMPT. The cable route of the FE/GE cable or FE/GE optical cable is the same as that of E1/T1 cable.

Procedure

Step 1 Connect one end of the E1/T1 cable to the **E1/T1** port on the WMPT or GTMU.

Step 2 Lead the other end out of the IMB03 from the top right, as shown in **Figure 15-34**.

Figure 15-34 Connections of the E1/T1 cable

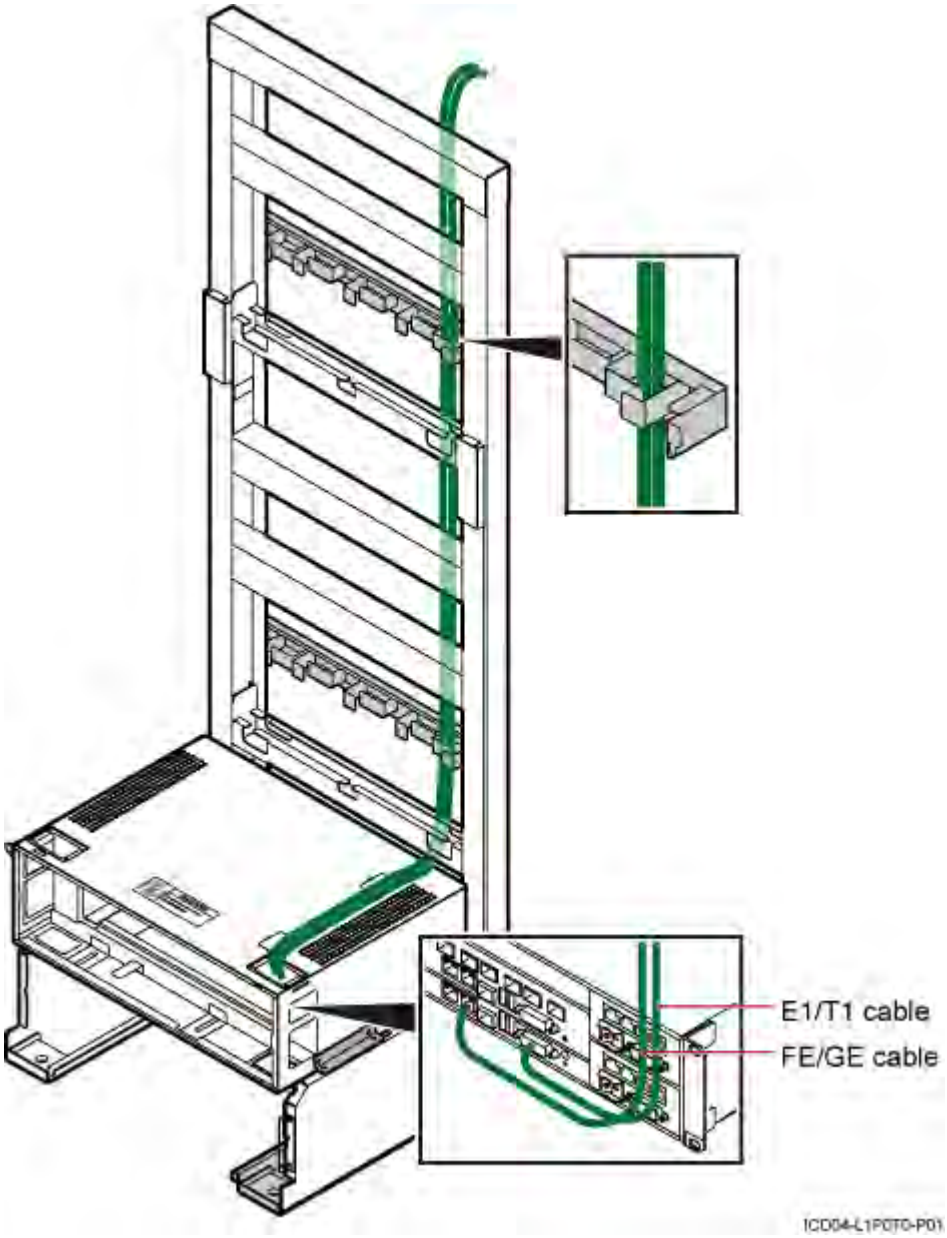

Step 3 Route cables by referring to **15.1 Cabling Requirements**.

Copyright © Huawei Technologies Co., Ltd.

Step 4 Use cable ties to bind cables.

Step 5 Label the installed cables by referring to Attaching an L-Shaped Label.

----End

15.11 Installing the CPRI Optical Cable

This section describes the procedure for installing the CPRI optical cable.

Context

- The single-mode optical module is labeled "SM" and multi-mode optical module is labeled "MM".
- If the puller of an optical module is blue, the module is a single-mode optical module. If the puller of an optical module is black or grey, the module is a multi-mode optical module.
- The optical module to be installed must have a matching rate with the corresponding CPRI port.

Procedure

- Installing the CPRI optical cable for the DC RRU
  1. Wear an ESD wrist strap or a pair of ESD gloves.
  2. Turn the puller of each optical module outwards, insert the optical module into the **CPRI** port on the BBU and the **CPRI_W** or **CPRI0** port on the RRU respectively, and then turn the puller inwards, as shown in **Figure 15-35**.

     Figure 15-35 Installing the optical module

     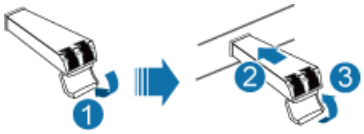

     ICW03-L0P3T0-P03

  3. Connect one end of the CPRI optical cable to the **CPRI_W** port on the RRU.
  4. Connect the other end to the **CPRI** port on the BBU.
  5. Route the optical cable in the cable trough by referring to **Figure 15-36**.

CAUTION

- When routing optical cables, coil the cables and place them on the top center of the upper-level IMB03 to ensure that the holes for heat dissipation are not covered.
- The minimum bending radius of the fiber is 140 mm. When coiling the optical cable, do not bend it excessively.

Copyright © Huawei Technologies Co., Ltd.

Figure 15-36 Connections of the CPRI optical cable for six DC RRUs

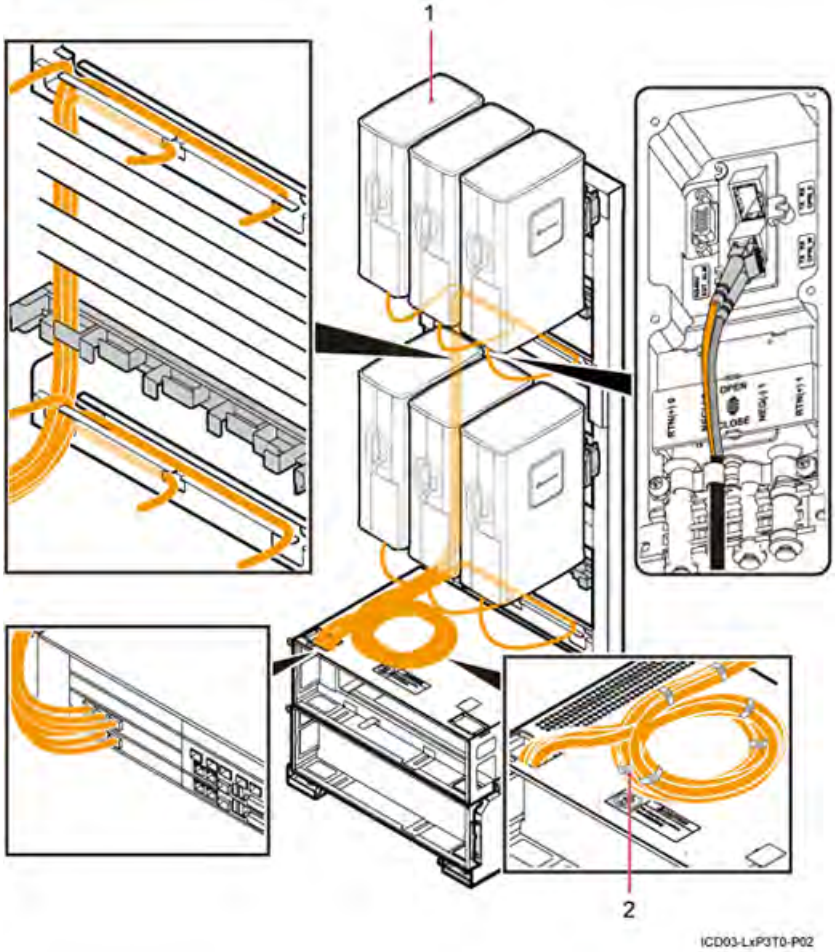

(1) Cable routes for 6 DC RRUs (2) Every three optical cables tied in a bundle

The cable route of the CPRI optical cable for 12 DC RRUs are slightly different. For details, see **Figure 15-37**.

Huawei Proprietary and Confidential
Copyright © Huawei Technologies Co., Ltd.

Figure 15-37 Connections of the CPRI optical cable for 12 DC RRUs

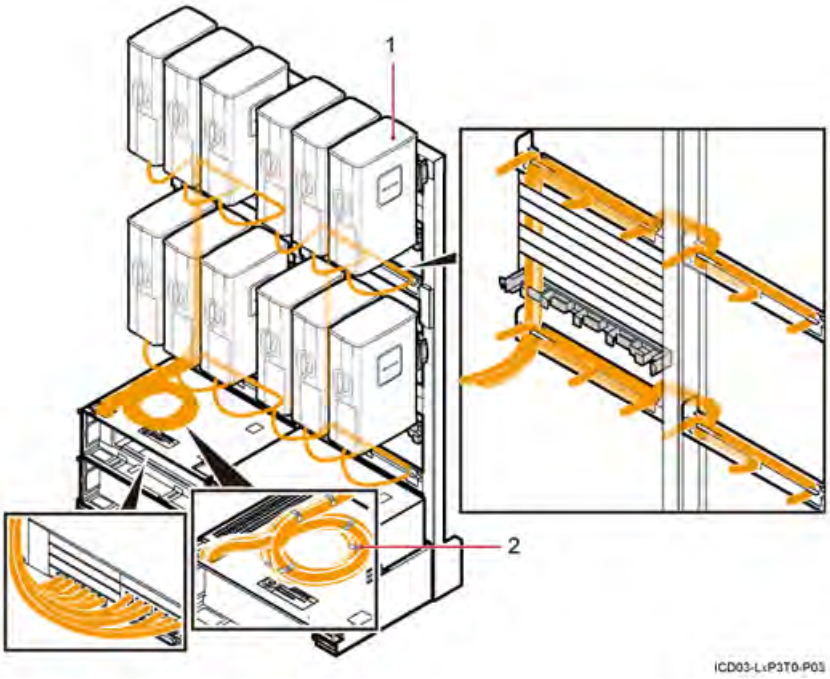

(1) Cable routes for 12 DC RRUs (2) Every three optical cables tied in a bundle

6. Route cables by referring to **15.1 Cabling Requirements**.
7. Use cable ties to bind cables.
8. Label the installed cables by referring to Attaching an L-Shaped Label.

- Installing the CPRI optical cable for the AC RRU
  1. Wear an ESD wrist strap or a pair of ESD gloves.
  2. Turn the puller of each optical module outwards, insert the optical module into the **CPRI** port on the BBU and the **CPRI_W** or **CPRI0** port on the RRU respectively, and then turn the puller inwards, as shown in **Figure 15-38**.

Figure 15-38 Installing the optical module

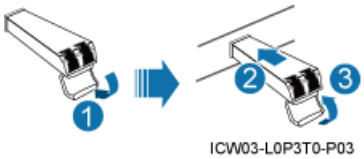

3. Connect one end of the CPRI optical cable to the cabling cavity of the RRU, as shown in **Figure 15-39**.

Copyright © Huawei Technologies Co., Ltd.

Figure 15-39 Connections of the CPRI optical cable for AC RRUs

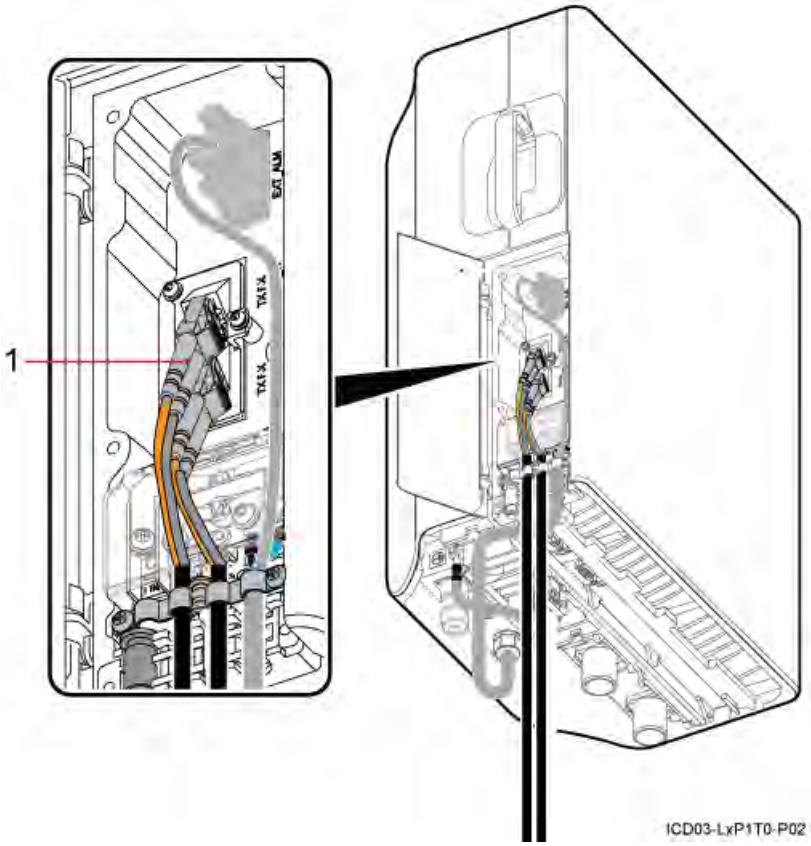

(1) CPRI optical cable

4. Connect the other end to the **CPRI** port on the BBU.
5. Route cables by referring to **15.1 Cabling Requirements**.
6. Use cable ties to bind cables.
7. Label the installed cables by referring to Attaching an L-Shaped Label.

----End

15.12 Installing the Antenna Jumper for the RRU

This section describes the procedure for installing the antenna jumper for the DC RRU.

Huawei Proprietary and Confidential
Copyright © Huawei Technologies Co., Ltd.

Context

CAUTION

- Fix a DIN connector near the cable rack before fixing another DIN connector far from the cable rack when installing the antenna jumper for the DC RRU. Pre-bend the RF jumper before connecting it to the RRU.
- The three wire clips in the middle of the cable trough are used for routing feeders. Each wire clip holds four feeders. You must install the feeders on the lower level before installing the feeders on the upper level.
- The minimum bending radius of the antenna jumper is 100 mm.
- When the STMA or Smart Bias-Tee (SBT) is used and the coaxial cable is used for the RET antenna of the RRU3201, OOK signals are required. In this case, the ANT_TX/RXA port is used for communications of the RET antenna.

Procedure

- Installing the antenna jumper for the DC RRU
  1. Connect one end of the antenna jumper to the **ANT_TX/RXA** and **ANT_RXB** ports at the bottom of the RRU.
  2. Connect the other end to the feeder or antenna, as shown in **Figure 15-40**.

     TIP

     Pre-bend the feeder before tightening the feeder connector.

Copyright © Huawei Technologies Co., Ltd.

Figure 15-40 Connections of the antenna jumper for the DC RRU

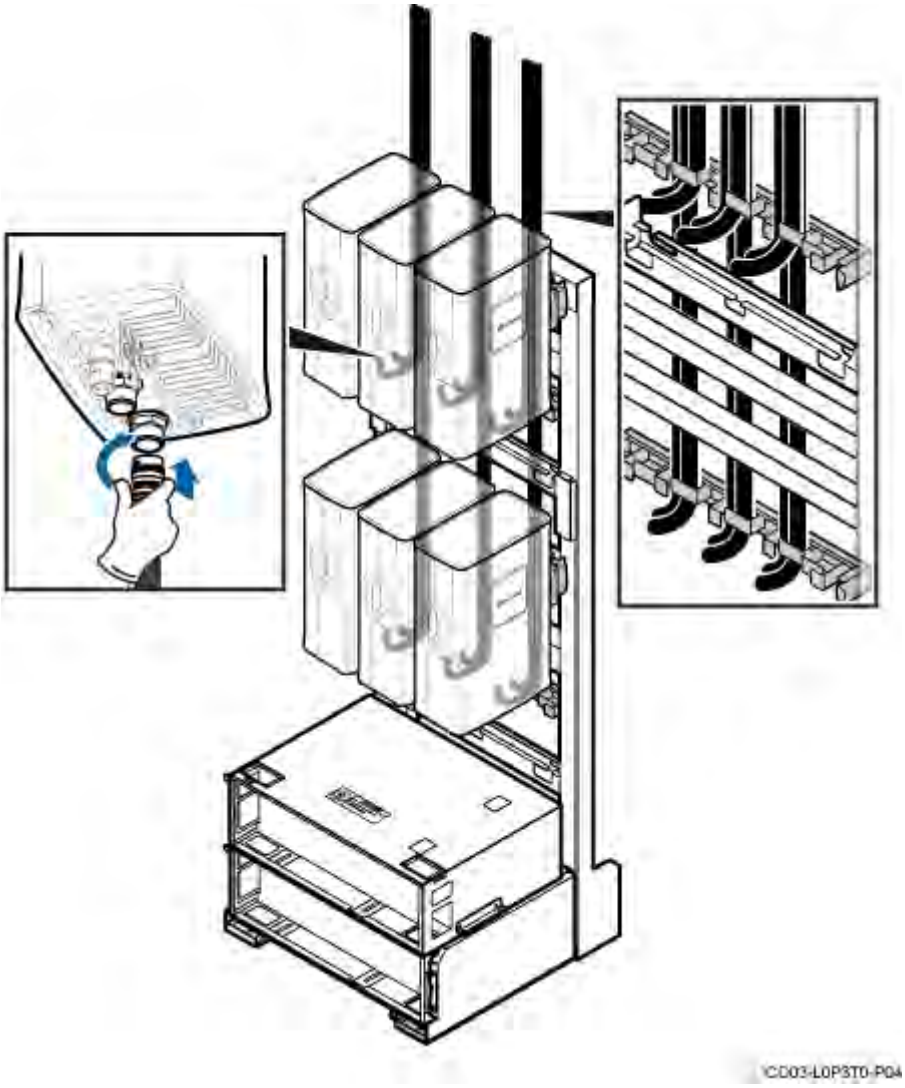

3. Route cables by referring to **15.1 Cabling Requirements**.
4. Use cable ties to bind cables.
5. Label the installed cables by referring to Attaching a Sign Plate Label.

- Installing the antenna jumper for the AC RRU
  1. Connect one end of the antenna jumper to the **ANTA** and **ANTB** ports at the bottom of the RRU.
  2. Connect the other end to the feeder or antenna, as shown in **Figure 15-41**.

     TIP

     Pre-bend the feeder before tightening the feeder connector.

Huawei Proprietary and Confidential
Copyright © Huawei Technologies Co., Ltd.

Figure 15-41 Connections of the antenna jumper for the AC RRU

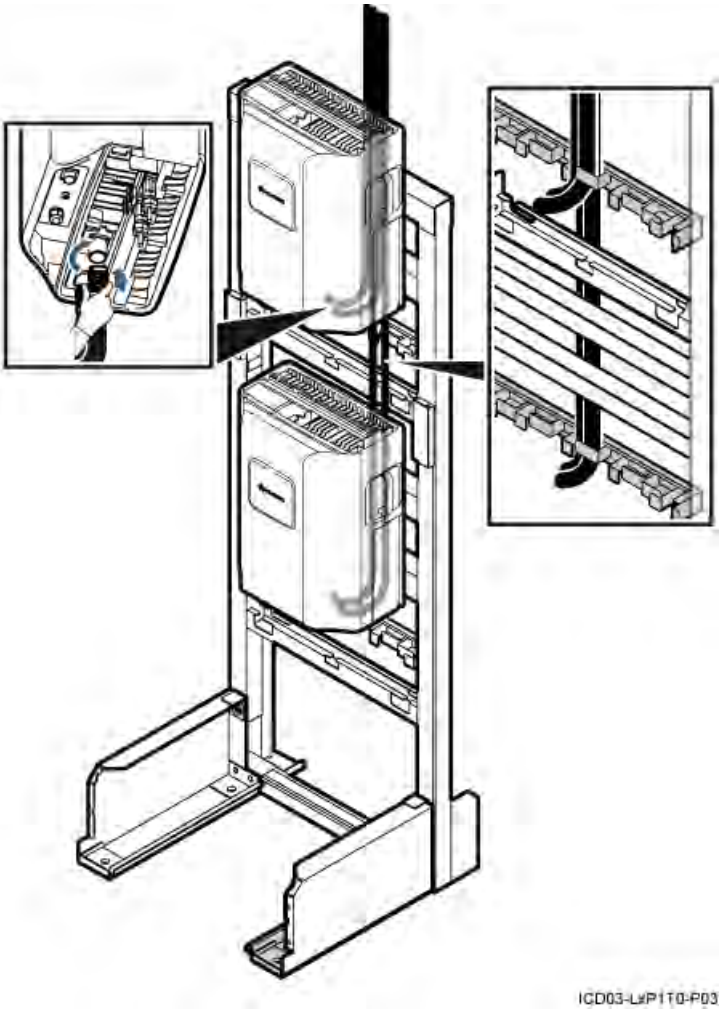

3. Route cables by referring to **15.1 Cabling Requirements**.
4. Use cable ties to bind cables.
5. Label the installed cables by referring to Attaching a Sign Plate Label.

----End

15.13 Installing a GPS Clock Signal Cable

This section describes the procedure for installing the GPS clock signal cable.

Procedure

Step 1 Connect the other end of the GPS clock signal cable to the GPS port on the USCU, orLMPT

NOTE

The GPS clock signal cable is connected to the GPS port on the USCU for a base station working in GSM Only, UMTS Only, or GSM+UMTS mode. It is connected to the GPS port on the LMPT for a base station working in LTE Only, UMTS+LTE, or GSM+LTE mode.

The route for the GPS clock signal cable is the same when the cable is connected to theLMPT, or USCU. **Figure 15-42** shows the connections of the GPS clock signal cable to the GPS port on the USCU.

Copyright © Huawei Technologies Co., Ltd.

Figure 15-42 shows the installation of the GPS clock signal cable.

Figure 15-42 GPS clock signal cable

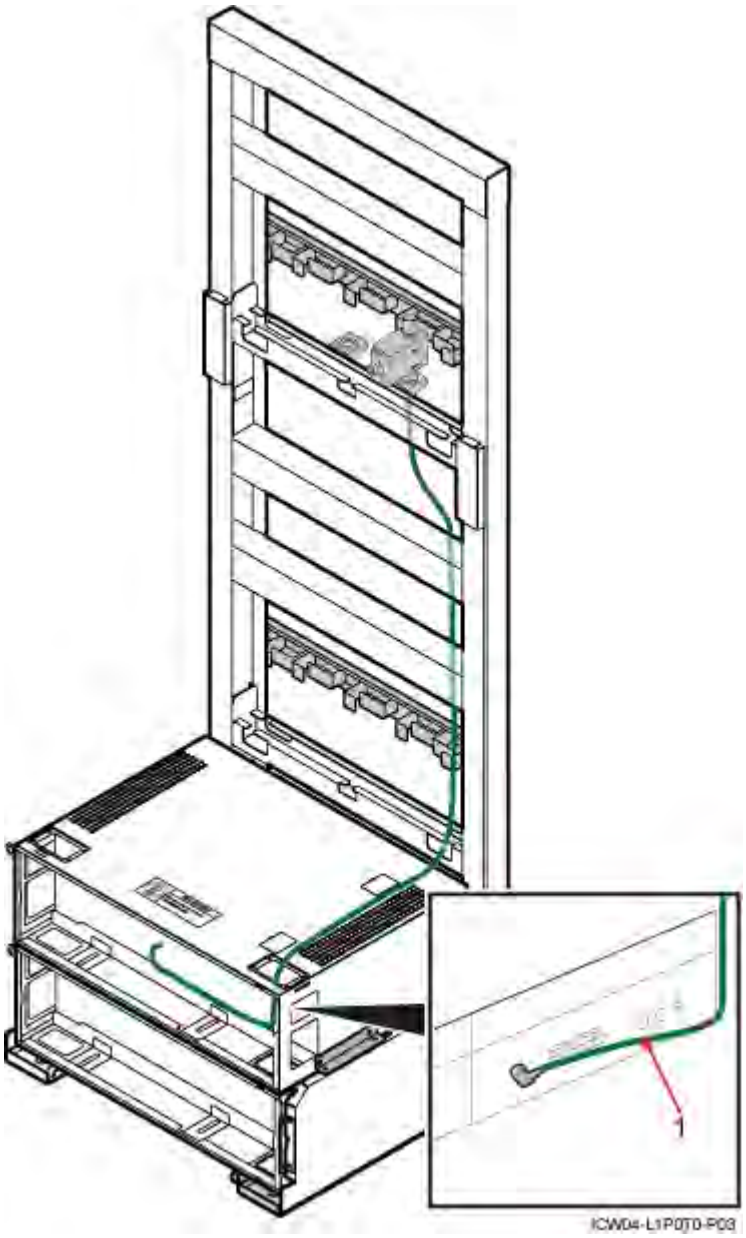

(1) GPS clock signal cable

Step 2 Route cables by referring to **15.1 Cabling Requirements**.

Step 3 Use cable ties to bind cables.

Step 4 Label the installed cables by referring to Attaching an L-Shaped Label.

----End

Huawei Proprietary and Confidential
Copyright © Huawei Technologies Co., Ltd.

16 Checklist for the DBS3900 Hardware Installation

This section describes the checklist for the DBS3900 hardware installation.

Table 16-1 Hardware installation checklist

No.	Item
1	The position for each equipment conforms to the engineering design and meets the space requirement. Sufficient space is reserved for equipment maintenance.
2	The BBU, RRU, and auxiliary devices are securely installed, and all the screws are tightened.
3	The DIP switch on the BBU is correctly set.
4	The cover plate is securely installed on the cabling cavity of the RRU.
5	Waterproof fillers are installed in the idle cable troughs of the cabling cavity of the RRU, and the cover plate of the cabling cavity is securely installed. In addition, the idle RF ports are covered with waterproof caps and waterproofed.
6	All the power cables and PGND cables are not short-circuited or reversely connected. In addition, no damaged or broken parts exist.
7	There are no connectors or joints on the power cable or PGND cable.
8	Tightly press the OT terminal on the conductor when adding the OT terminal to the power cable or PGND cable.
9	The bare wire and OT terminal at the wiring terminal are tightly wrapped with the insulation tape or heat-shrinkable tube.
10	The working grounding and protection grounding of the base station and the surge protection grounding of the building share one group of grounding conductors.
11	The connector of the signal cable is intact, and no damaged or broken parts exist on the cable.

Copyright © Huawei Technologies Co., Ltd.

No.	Item
12	The distance between the bundled fiber and the BBU panel is between 40 mm and 70 mm.
13	Labels are correct, legible, and complete on both ends of each cable.

Huawei Proprietary and Confidential
Copyright © Huawei Technologies Co., Ltd.

17 Performing the DBS3900 Power-On Check

After all devices are installed, you need to check the power-on status of the BBU and RRU.

CAUTION

- The DBS3900 must be powered on within seven days after it is unpacked, and the period for which the DBS3900 remains powered-off during maintenance must not exceed 48 hours.
- The RRU must be powered on within 24 hours after it is unpacked, and the period for which the RRU remains powered-off during maintenance must not exceed 24 hours.

Checking the Power-On Status of the BBU

Figure 17-1 shows the BBU power-on check process.

Copyright © Huawei Technologies Co., Ltd.

Figure 17-1 BBU power-on check process

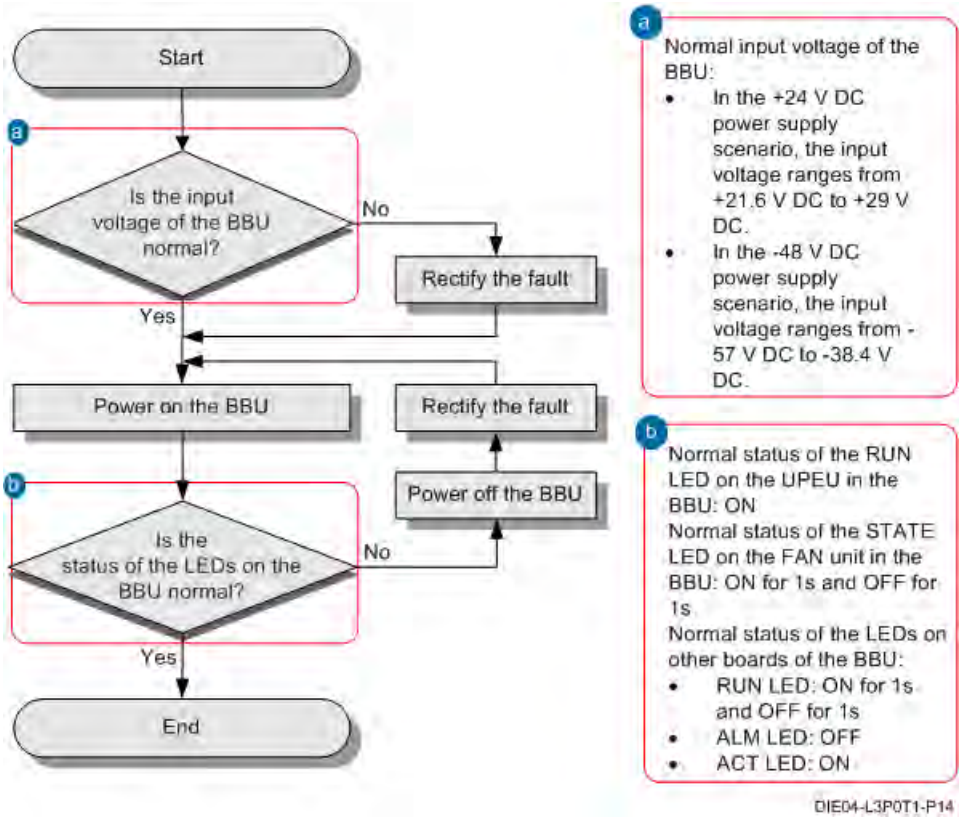

Checking the Power-On Status of the RRU

Figure 17-2 shows the RRU power-on check process.

Huawei Proprietary and Confidential
Copyright © Huawei Technologies Co., Ltd.

Figure 17-2 RRU power-on check process

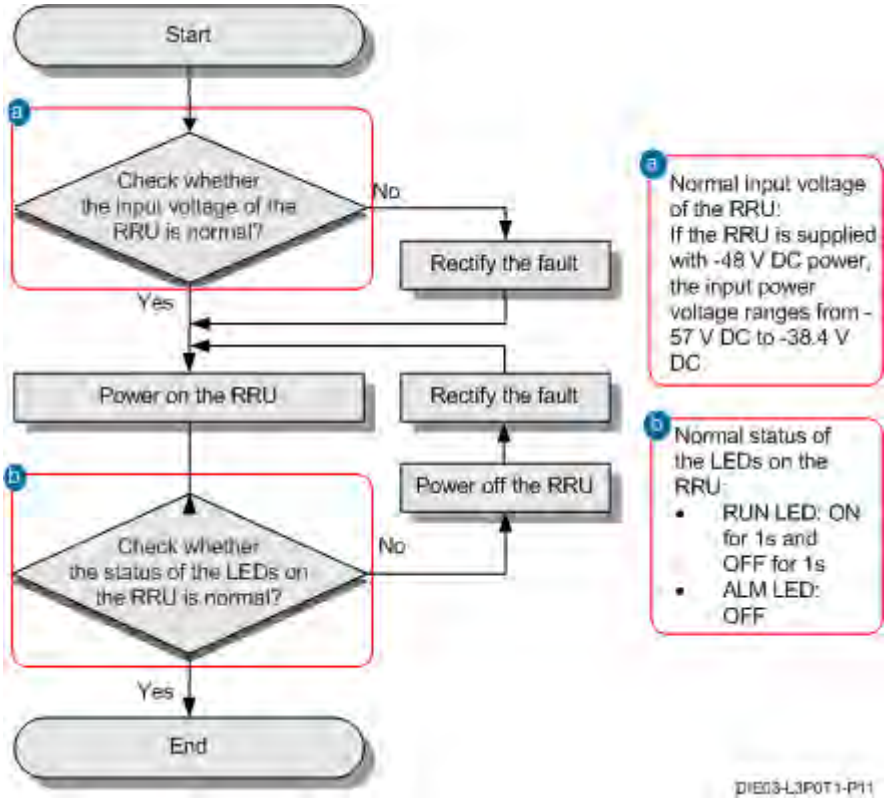

Copyright © Huawei Technologies Co., Ltd.

18 Installing the Cover Plate for the IMB03

This section describes the procedure for installing the cover plate for the IMB03.

Procedure

Step 1 Fit the tabs on the cover plate into the slots in the IMB03, as shown in **Figure 18-1**.

Figure 18-1 Installing the cover plate

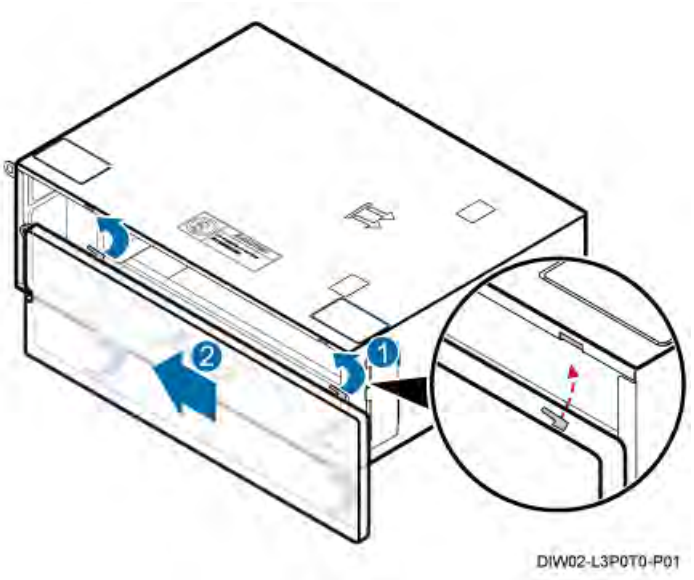

Step 2 Tighten the M3×8 bolt on the left of the cover plate for the IMB03 until the tightening torque reaches 0.3 N·m using a Phillips torque screwdriver, as shown in **Figure 18-2**.

Copyright © Huawei Technologies Co., Ltd.

Figure 18-2 Securing the cover plate

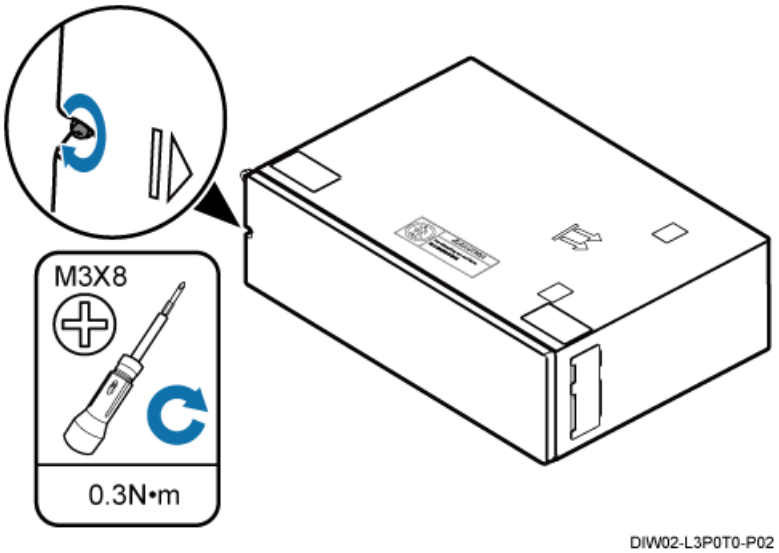

----End

Copyright © Huawei Technologies Co., Ltd.