Date: 06-23-2003

Number of Pages: 9
WLI Project: 20031817
FCC ID: QJFTRAKMUX

TELECOMMUNICATION DIVISION

CODE OF FEDERAL REGULATION

PART 15 – RADIO FREQUENCY DEVICES

SUBPART "C" – INTENTIONAL RADIATORS

MEASUREMENT / TECHNICAL REPORT

ON

Product Name/Model: MCSI Trak Multiplexer

Manufacturer: Micro Concepts & Solutions, Inc.
5015 Paul Wayne Drive
Boling, TX 77420

Tested by Request of: Micro Concepts & Solutions, Inc.

Performed By:

Wayne Langston Incorporated
P.O. Box 1377, League City, TX 77574-1377
Tel: 281-337-6785; Fax: 281-337-7217; Email: langstoninc@msn.com

Test Results:
The test results for this sample provided show that the EUT is [x] is not [ ] in compliance with the requirements of the CFR 47 Part 15 Subpart C Requirements. I certify that I am the technically qualified person responsible for preparation of the technical information contained in this application, and that it is complete and accurate to the best of my knowledge

Tested By: Date: 06-23-2003
Wayne Langston

Wayne Langston Incorporated authorized the above-named Applicant Company to reproduce this Report provided it is reproduced in its entirety.

THIS REPORT MUST NOT BE USED TO CLAIM PRODUCT ENDORSEMENT BY NVLAP OR ANY AGENCY OF THE U.S. GOVERNMENT.

TABLE OF CONTENTS

Section 1 General Information.....1
1.1 Introduction.....1
1.2 Test System Details.....1
1.3 Test Methodology.....1
1.4 Test Facility.....1
1.5 Test Sample.....2
1.6 Test Results.....2
1.7 Modifications.....3

Section 2: Product Labeling.....3
2.1 Information to the User.....3

Section 3 Test System Measurements.....4
3.1 Measurements Methods.....4
3.1.1 Field Strength of in-band Measurements.....4
3.1.2 Frequency Tolerance.....5
3.1.2.1 Frequency Stability vs Temperature.....5
3.1.2.2 Frequency Stability vs Supply Voltage.....5
3.1.2.3 Unwanted Emissions.....6

Section 4 General Measurement Conditions.....7

Section 5 Reference Regulations.....8

Section 6 List of Measurements.....9

Appendix A Test Methods in Accordance with § 15.225 (a).....

Appendix B Test Methods in Accordance with § 15.225 (b).....

Appendix C Test Methods in Accordance with § 15.225 (c).....

Appendix D EUT Photos.....

Appendix E FCC Label.....

Section 1 General

1.1 Introduction

Conducted and Radiated Electromagnetic Disturbance measurements were performed on the equipment under test.

1.2 Tested System Details

The FCC ID's for all equipment, plus descriptions of all cables used in the tested system are described on the test manifest sheets.

1.3 Test Methodology

Radiated emissions on this frequency range 9 kHz – 30 MHz will be measured initially at a distance of 3 meters. A prescan at 3 meter distance will be performed in a shielded room with the detector of the spectrum analyzer or EMI Receiver set to peak. Finall measurement is then performed at 30 meter distance. In case the regulation requires testing at other distances, the result will be extrapolated. The extrapolation factor will be determined by making a second measurement at 10 meter distance. The provisions of 15.31 (d) apply,

According to section 15.209 (d) final measurements performed with the detector set to Quasi Peak except for the frequency bands 9 – 90 kHz and 110 – 490 kHz where average detector is employed.

1.4 Test Facility

This facility performs EMI measurements, which support verification of compliance with CENELEC International Standards. It has filed a "Description of the Measurement Facility" and is on file with the FCC Laboratory Division in Colombia, Maryland. The FCC approved the site for the purpose of providing test results for submission with equipment authorization applications under the Commissions Equipment Authorization Program. This

site is located adjacent to the building on FM 1266, League City, Texas. The instrumentation used to perform the test conforms to ANSI C63.2, CISPR 16, and FCC requirements for detector function and bandwidth. All equipment was calibrated and traceable to NIST. Calibration period is 1 year. Wayne Langston, Inc. has received NVLAP Accreditation, Certificate No. 200021-0.

1.5 Test Samples:

A representative test sample was tested under the test procedure and requirements of the CFR 47 Part 15 Subpart C, Section 15.225 Requirements . The Equipment Under Test (EUT) is in compliance with the applicable technical standards if no unauthorized change is made in the equipment and if the equipment is properly maintained and operated. Compliance with these standards shall not be construed to be a finding with respect to matters not encompassed by the Commission's rules.

1.5.1 Operation mode of EUT

Continuously reading a TAG

.

1.6 Test Results (Worst Case Scenario)

The test results for this sample provided show that the EUT is [x] is not [ ] in compliance with the requirements of the CFR 47 Part 15 Subpart C, Section 15.225 Requirements . The results from this testing and verification apply only to the sample that was tested and any identical production lot. The findings do not make any suggestions about how the product is to be used, nor does Wayne Langston Incorporated make any recommendations regarding the product's usage.

1.7 Modifications

Modifications (if any) will be noted on the test data sheets.

Section 2 Product Labeling

As required by the CFR 47, pursuant to clause 15.19(a)(3), the EUT shall bear the following statement in a conspicuous location on the device:

This device complies with Part 15 of the FCC Rules. Operations is subject to the following two conditions: (1) This device may not cause harmful interference, and 2) this device must accept any interference received, including interference that may cause undesired operation

2.1 Information to the User

As required by the CFR 47, pursuant to clause 15.105(b), the instructions furnished the user shall include the following or similar statement, placed in a prominent location in the text of the manual:

This equipment has been tested and found to comply with the limits for a Class B Digital Device, pursuant to Part 15 of the FCC Rules. These limits are designed to provide reasonable protection against harmful interference when the equipment is operated in a residential installment. This equipment generates, uses and can radiate radio frequency energy and, if not installed and used in accordance with the instructions, may cause harmful interference to radio communications. However, there is no guarantee that interference will not occur in a particular installation. If this equipment does cause harmful interference to radio or television reception, which can be determined by turning the equipment off and on, the user is encouraged to try to correct the interference by one or more of the following measures:

- Reorient or relocate the receiving antenna.
- Increase the separation between the equipment and receiver.

- Connect the equipment into an outlet on a circuit different from that to which the receiver is connected.
- Consult the dealer or experienced radio/TV technician for help.

As required by the CFR 47, pursuant to clause 15.21, the instructions furnished the user shall include the following or similar statement, placed in a prominent location in the text of the manual:

The users manual or instruction manual for an intentional or unintentional radiator shall caution the user that changes or modifications not expressly approved by the party responsible for compliance could void the user's authority to operate the equipment.

Section 3 Test System Measurements

Noted and complies.

Section 3.1 MEASUREMENT METHODS

3.1.1 Field strength of in-band emissions (§15.225 (a)) and unwanted emissions < 30 MHz (§15.225 (b))

Radiated emissions in the frequency range 9 kHz – 3- MHz will be measured initially at a distance of 3 meters. A prescan at 3-meter distance will be performed in a shielded room with the detector of the spectrum analyzer or EMI Receiver set to peak. Final measurement is then performed at 30-meter distance. In case the regulation requires testing at other distances, the result will be extrapolated. The extrapolation factor will be determined by making a second measurement at 1-0 meter distance. The provisions of 15.31 (d) apply.

According to section 15.209 (d) final measurements performed with the detector set to Quasi Peak except for the frequ3ncy bands 9 – 90 kHz and 110 – 490 kHz where average detector is employed.

3.1.2 Frequency tolerance (§ 15.225 (c))

3.1.2.1 **Frequency stability vs. temperature**

The frequency stability vs. temperature was measured with a spectrum analyzer connected to the output of the transmitter power amplifier (conducted measurement) via dummy load while EUT was operating in transmit mode using the assigned frequency.

The trace mode of the spectrum analyzer was set to write with frequency count mode activated:

RBW = 100 Hz, VBW = 100 Hz, span = 20 kHz, sweep = 1.5 s (auto mode)

See the figure for the measurement setup

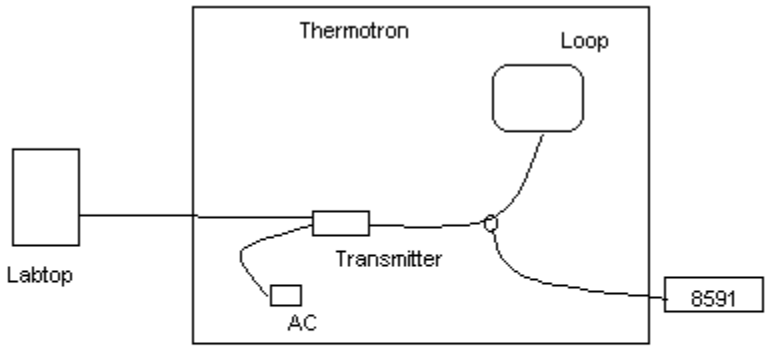

3.1.2.2 **Frequency stability vs. supply voltage**

The frequency stability vs. supply voltage was measured with a spectrum analyzer connected to the output of the transmitter power amplifier (conducted measurement) via dummy load while EUT was operating in transmit mode using the assigned frequency.

The trace mode of the spectrum analyzer was set to write with frequency count mode activated:

RBW = 100 Hz, VBW = 100 Hz, span = 20 kHz, sweep 1.5 s (auto mode)

See figure for the measurement setup

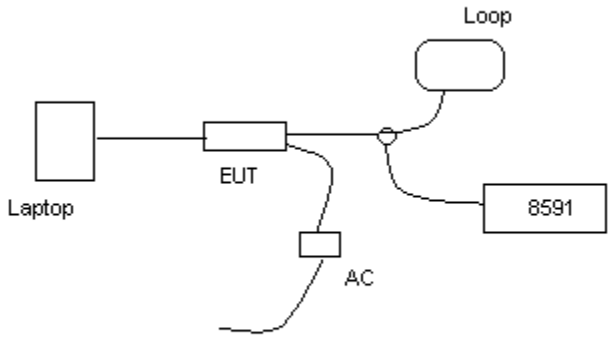

Test equipment used:

8591 E	11/02
8640B	10/03
8494A	10/03
8495A Attenuator	10/03

AC Adapter, Model: PV-5300PR, 5 vdc,

3.1.2.3 **Unwanted Emission 30 MHz – 1 GHz (§ 15.225 (b))**

Radiated emissions were measured over the frequency range from 30 MHz to 1 GHz. For final testing the

detector-function of the spectrum analyzer was set to quasi peak using a tuned dipole antenna.

Measurements were made in both the horizontal and vertical planes of polarization. Preliminary scans were taken in a semi-anechoic room using a spectrum analyzer with the detector function set to peak and resolution bankwidth set to 100 kHz. All tests were performed at at test distance of 3 or 10 meters. For final testing an open-area test site was used. During the tests the EUT was rotated all around and the receiving antenna was raised and lowered from 1 meter to 4 meters to find the maximum levels of emissions. The cables and equipment were placed and moved within the range of position likely to find their maximum emissions. Limits established per 15.225 as 10,000 μV/meter at 30 meter for the carrier

and elsewhere per 15.209.

See figure for the measurement setup.

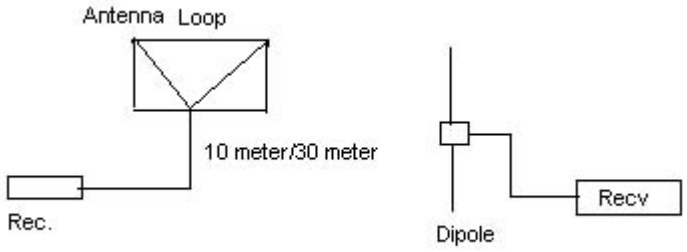

Test Equipment used:

8591E Analyzer	11/02
8640B	10/03

Section 4 GENERAL MEASUREMENT CONDITIONS

4.1 Ambient Emanations

Noted and complies.

Ambient Noise Floor: 20.0 dB.

4.2 Test Configuration of EUT and Peripheral Devices

Configuration of cables of EUT: Not Applicable

Configuration of peripheral devices connected to EUT: The EUT was connected to a

Compaq 1681 via a standard R232 interface See attached FCC Label.

4.3 Firmware

The firmware is manufacturer provided.

4.4 Exercise Software.

The software used is manufacturer provided.

4.5 Ground Plane

Noted.

Test Unit is Portable. (Floor-standing, table-top or portable)**.**

5.0 Referenced Regulations

All tests were performed with reference to the following regulations and standards:

[X] CFR 47, Part 2 October 2000
(Frequency allocations and radio treaty matters,
general rules and regulations)

[ ] CFR 47 Part 15, Subpart A October 2000
(Radio Frequency Devices), Subpart A

[ ] CFR 47 Part 15, Subpart B October 2000
(Unintentional Radiators)

[X] CFR 47 Part 15, Subpart C October 2000
(Radio Frequency Devices, Intentional Radiators)

[ ] CFR 47 Part 95, Subpart C/E October 2000
Personal Radio Services, Radio Control Radio Service)

[X] ANSI 63.4 October 1992
Methods of Measurement of Radio-Noise Emissions
From Low-voltage electrical and electronic Equipment\
In the range of 9 kHz – 40 GHz

[X] RSS-210 February 1996
Radio Standards for low power license – Exempt

[ ] TIA/EIA-603 February 1993
Land Mobile FM or PM Communications equipment

6.0 List of Measurements: CFR 47, Part 15, Subpart C

Section(s)	Test	Page	Result
§ 15.225 (a)	Maximum in-band field strength	Appendix A	Passed
§ 15.225 (b)	Out-of-band emissions	Appendix B	Passed
§ 15.225 (c)	Frequency tolerance of carrier signal	Appendix C	Passed

APPENDIX A

Test Method in Accordance with § 15.225 (a)

Type: Inductive Reader
Serial No.: Prototype
Applicant: Micro Concepts, Inc.
Test site: Open field Test site (with Ground Plane)
Distance: 30 Meter for carrier (no ground plane)
10 Meter for spwrs as noted

Small Loop

Maximum allowable level = 10,000 µ v/m @ 13,560 MHz

Freq-uency MHz	Detector	Antenna Polariz-ation	Analyzer Reading (dbµV)	Correction Factor	Field Strength (dbµv/m)	Limit (dbµv/m)	Margin Db	Dist-ance Meter
13.553	QP		9.1	None	9.1	29.5		10
13.560	QP	N/A	39	None	39.1	80.0	40.9	30
13.567	QP	N/A	11.1	None	11.1	29.5		10
27.120	QP	N/A	19.1	None	19.1			10

Large Loop

Maximum allowable level = 10,000 µ v/m @ 13,560 MHz

Freq-uency MHz	Detector	Antenna Polariz-ation	Analyzer Reading (dbµV)	Correction Factor	Field Strength (dbµv/m)	Limit (dbµv/m)	Margin Db	Dist-ance Meter
13.553	QP		10.3	None	10.2	29.5		10
13.560	QP	N/A	43.8	None	43.9	80.0	36.1	30
13.567	QP	N/A	12.3	None	12.5	29.5		10
27.120	QP	N/A	22.1	None	22.2			10

***** = No emissions above noise floor detected**

Test Equipment Used:
8591E 11/03
8640B 10/03
Loop Antenna HFH2-Z2 R&S 10/03 ANSI 63.5

Note: HFH2-Z2 is direct reading on the 8591E
.

APPENDIX B

Test Method in Accordance with § 15.225 (b)

Type: Inductive Reader
Serial No.: Prototype
Applicant: Micro Concepts, Inc.
Test site: Open field Test site (with Ground Plane)
Distance: 3 Meter

Small Loop

Frequency MHz	Detector	Antenna Polariz-ation	Analyzer Reading (dbμv)	Correction Factor	Field Strength dbμv/m)	Limit (μv/m) dbμv/m	Margin Db
54.24	QP	Hor 1.0m	13.1	11.6	24.7	100 / 40	15.3
108.5	QP	Hor 2.5m	23.1	15.1	38.2	100 40	1.8
135.600	QP	Hor 2.0m	24.3	15.1	39.4	150 43.5	4.1
244.082	QP	Hor 2.0m	20.9	21.0	41.9	200 46	4.1
271.200	QP	Hor 2.0m	20.3	21.2	41.5	200 46	4.5
325.500	QP	Hor 1.0m	12.1	25.0	37.1	200 46	8.9
54.24	QP	V 1.0	12.1	11.6	23.7	100 40	16.3
108.478	QP	V 1.0	21.3	15.1	36.4	100 40	3.6
135.6	QP	V 1.5	19.1	15.1	34.2	150 43.5	9.3
325.5	QP	V 1.5	10.0	25.0	35.0	200 46.0	11.0

Large Loop

Frequency MHz	Detector	Antenna Polariz-ation	Analyzer Reading (dbμv)	Correction Factor	Field Strength dbμv/m)	Limit (μv/m) dbμv/m	Margin Db
54.24	QP	Hor 1.0m	14.8	11.6	26.4	100 / 40	16.6
108.5	QP	Hor 2.5m	522.4	15.1	37.5	100 40	2.5
135.600	QP	Hor 2.0m	24.1	15.1	39.2	150 43.5	4.3
244.082	QP	Hor 2.0m	22.0	21.0	43.0	200 46	3.0
271.200	QP	Hor 2.0m	21.3	21.2	42.5	200 46	3.5
325.500	QP	Hor 1.0m	14.1	25.0	39.1	200 46	6.9
54.24	QP	V 1.0	12.3	11.6	23.9	100 40	16.1
108.478	QP	V 1.0	21.1	15.1	36.2	100 40	3.8
135.6	QP	V 1.5	18.1	15.1	33.2	150 43.5	10.3
325.5	QP	V 1.5	10.1	25.0	35.1	200 46.0	10.9

***** = No emissions above noise floor detected**

Sample calculation of field strength values:

Field Strength (dbµv/m) = Analyzer Reading (dbµV) + Correction Factor (dB)
10,000 µv/m @ 30

Test Equipment Used:

8591E	11/02	
8640B	10/03	
Tuned Dipole	10/03	Ansi 63.5

APPENDIX C

Test Method in Accordance with § 15.225 (c)

Frequency Stability vs. Temperature

Type: Inductive Reader
Serial No.: Prototype
Applicant: Micro Concepts, Inc.
Test site: Thermotron
Test Conditions:

Temperature: See table below
Supply voltage: 5.0 V DC

Specifications: ±0.01 % of nominal carrier frequency
Temperature range: -20 to + 50º C

Temperature (ºC)	Nominal carrier frequency (MHz)	Frequency measured (MHz)	Frequency deviation (Hz)	Frequency deviation (%)	Limit (%)
-20	13,560000	13560012	12		0.01
-10	13,560000	13560010	10		0.01
+ 0	13,560000	13560010	10		0.01
+ 10	13560000	13560005	5		0.01
+ 20	13560000	13560000	0		0.01
+ 30	13560000	13559999	1		0.01
+ 40	13560000	13559998	2		0.01

Result: Passed

Thermotron
Fluke 27/Amprobe TH-2

Frequency Stability vs. Supply Voltage

Type: Inductive Reader
Serial No.: Prototype
Applicant: Micro Concepts, Inc.

Test Conditions:

Temperature: See table below
Supply voltage:

Specifications: ±0.01 % of nominal carrier frequency
Temperature range: -20 to + 50º C

Supply Voltage (V)	Nominal carrier frequency (MHz)	Frequency measured (MHz)	Frequency deviation (Hz)	Frequency deviation (%)	Limit (%)
7.65	13,560000	13559881	119		0.01
9.00	13,560000	13559885	115		0.01
10.35	13,560000	13559883	117		0.01

Result: Passed

APPENDIX D

EUT PHOTOS AND TEST CONFIGURATION

Conducted Front View – Small Loop Antenna

Conducted Rear View – Small Loop Antenna

Radiated Front View – Small Loop Antenna

Radiated Rear View – Small Loop Antenna

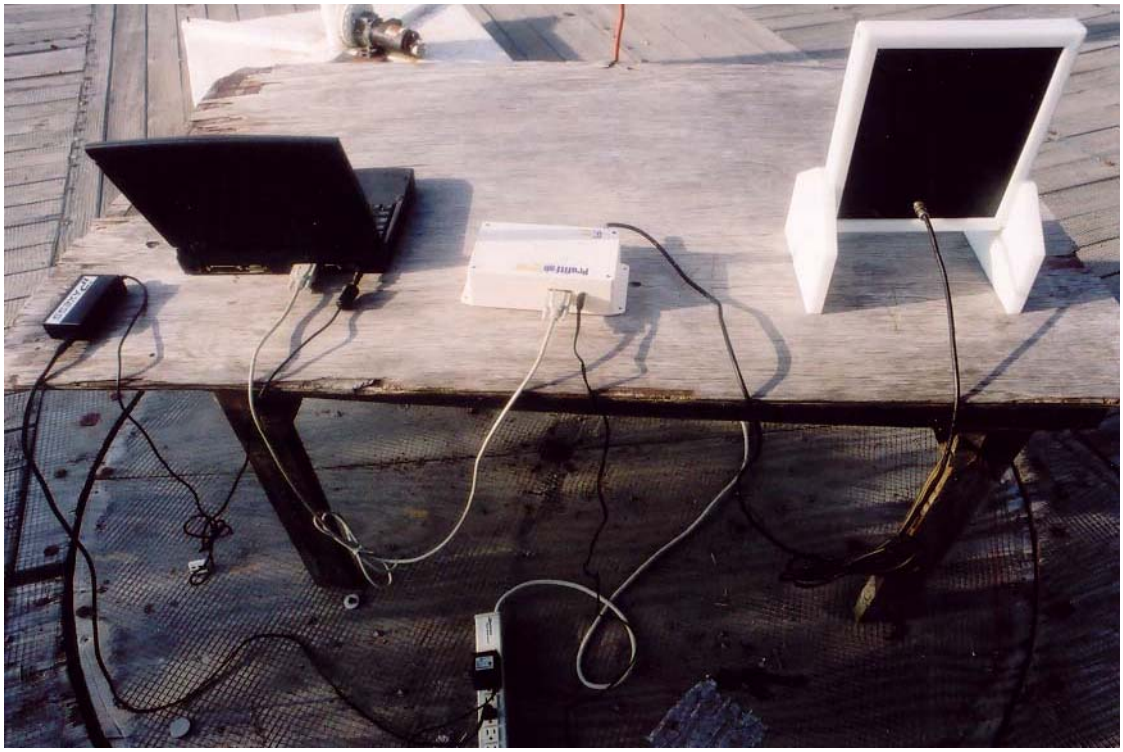

Conducted Front View – Large Loop Antenna

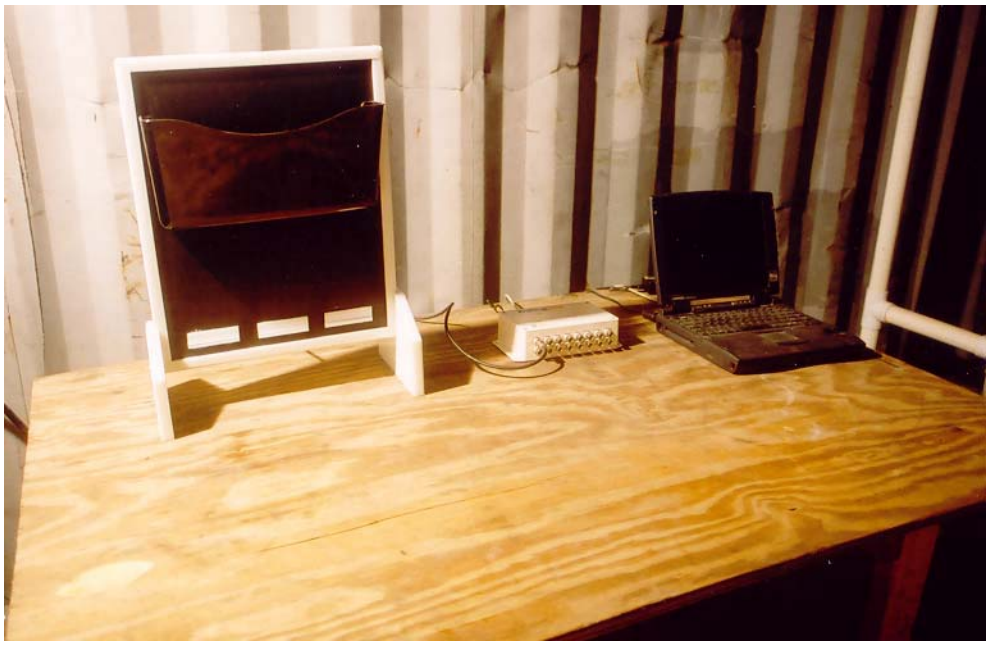

Conducted Rear View – Large Loop Antenna

Radiated Front View – Large Loop Antenna

Radiated Rear View – Large Loop Antenna

EUT Top View

Internal View

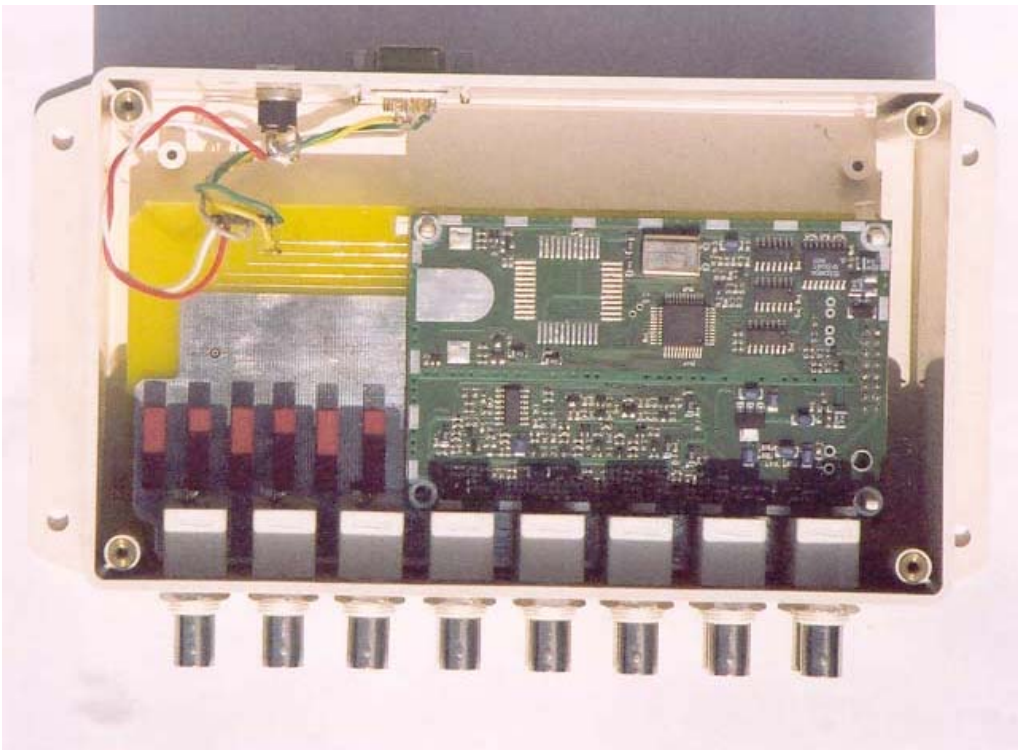

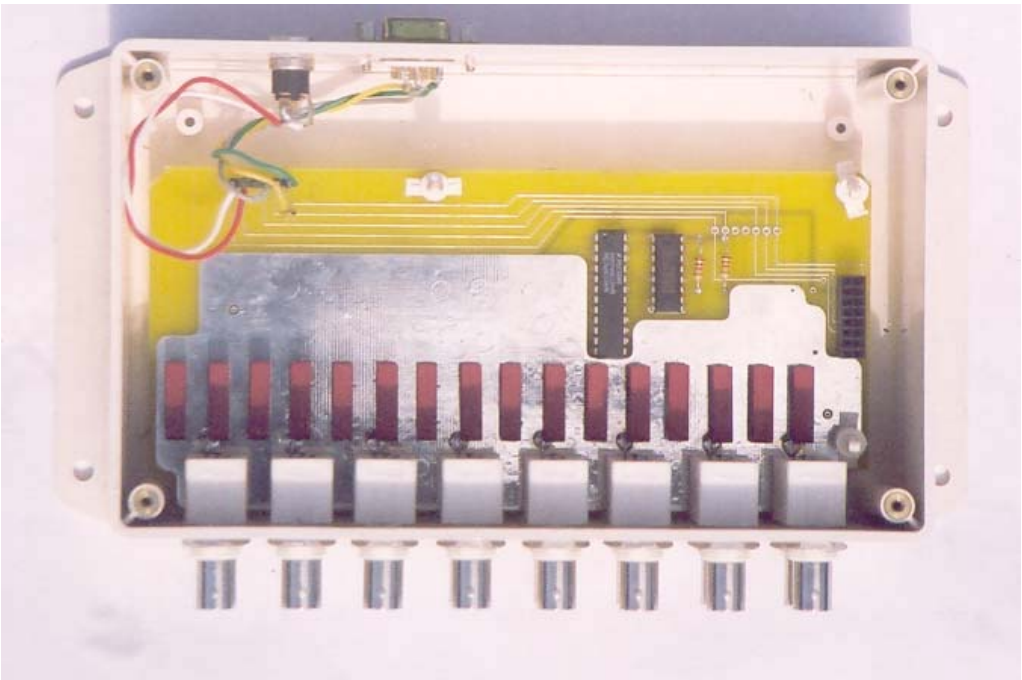

Component View

Appendix E

FCC Label

Compaq Laptop FCC Label on Equipment used

Model: MCSI Trak Mux
Date: 06-23-2003
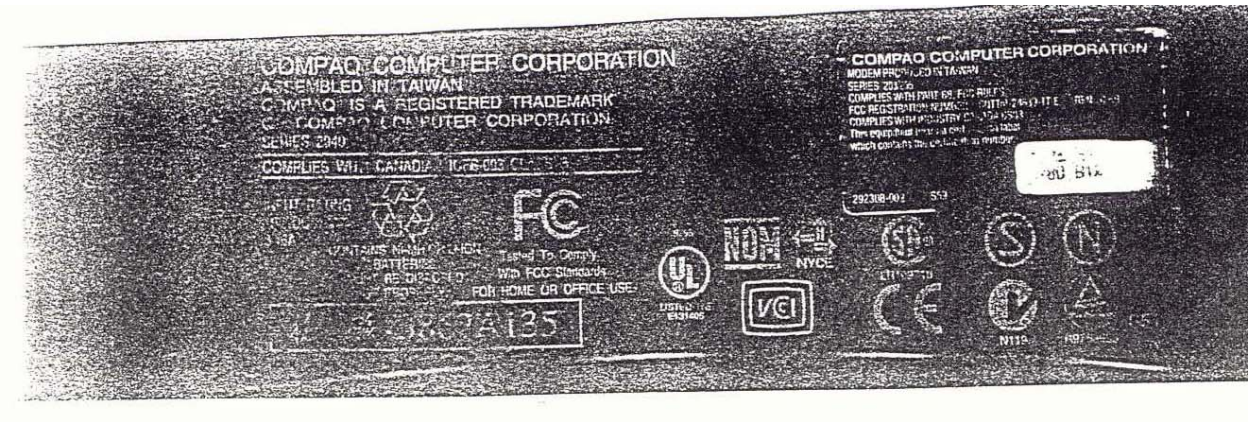
Appendix E
FCC Label
WLI Project: 20031817
FCC ID: QJFTRAKMUX