NOGGIN

Smart Systems

Users Manual Version 1.1

Information on pulseEKKO, Noggin and Conquest Products Regarding Electromagnetic Emissions

Emissions

All governments have regulations on the level of electromagnetic emissions that an electronic apparatus can emit. The objective is to assure that one apparatus or device does not interfere with any other apparatus or device in such a way as to make the other apparatus non-functional.

Sensors & Software Inc. have extensively tested their pulseEKKO, Noggin and Conquest subsurface imaging products using independent testing houses and comply with the regulations of the USA, Canada, European Community and other major jurisdictions on the matter of emissions.

Not all electronic devices have been designed for interference immunity. When placed in close proximity to another device interference may occur. There has never been a report of interference from GPR products to date. If you observe unusual behavior on nearby devices while you are operating a pulseEKKO, Noggin or Conquest product, immediately turn off the product. You can test the cause and affect between the product and the device if the disturbance starts and stops when the product is powered up and shut off. If interference is confirmed, stop using the product.

Immunity

Immunity regulations place the onus on instrument/apparatus/device manufacturers to assure that extraneous interference will not unduly cause an instrument/apparatus/device to stop functioning or to function in a faulty manner.

Based on independent testing house measurements, Sensors & Software Inc. systems comply with such regulations in Canada, USA, European Community and most other jurisdictions. One must remember that Sensors & Software Inc.'s products are designed specifically to sense electromagnetic fields. External sources of electromagnetic fields such as TV stations, radio stations and cell phones, can cause detectable signals that may degrade the quality of the data that the products record and display.

Such interference is unavoidable but sensible survey practice and operation by an experienced practitioner can minimize such problems. In some geographic areas emissions from external sources may be so large as to preclude useful measurements. Such conditions are readily recognized and accepted by the professional geophysical community as a fundamental limitation of geophysical survey practice.

Health

The interaction of electromagnetic fields with humans is an evolving field of epidemiology although one which creates sensational press headlines. Humans are immersed daily in a sea of electromagnetic fields which cover a wide range of frequencies. Systematic correlation between EM fields and human illness have only been reported at very high powers (millions of times greater than any Sensors & Software Inc. product) for military radar systems operating in the 5000 to 20,000 MHz range where physical burning/heating (basically like a microwave oven) have been reported.

Sensors & Software Inc. monitors the research in this area. To date, the power levels of Sensors & Software Inc.'s products are so small as to be inconsequential compared to other common sources. If you are happy that a cell phone is not hazardous, then Sensors & Software Inc.'s product, being of much lower power, need be of little concern. Also see Appendix B - Health & Safety Certification.

Safety

Concerns are expressed from time to time on the hazard of subsurface imaging products being used near blasting caps and unexploded ordnance (UXO). Experience with blasting caps indicates that the power of Sensors & Software Inc.'s products are not sufficient to trigger blasting caps. Based on a conservative independent testing house analysis, we recommend keeping the subsurface imaging transmitters at least 5 feet (2m) from blasting cap leads as a precaution.

The UXO issue is more complex and standards on fuses do not exist for obvious reasons. To date, no problems have been reported with any geophysical instrument used for UXO. Since Proximity and vibration are also critical for UXO, the best advice is to be cautious and understand the risks.

Copyright and Warranty Information

Software Licence & Limited Warranty

Important: Please read this document carefully before removing the *SOFTWARE PRODUCT* diskettes from their protective cover or assembling the *HARDWARE PRODUCT*. By removing the diskettes or assembling the hardware, you are agreeing to become bound by the terms of this agreement. If you do not agree to the terms of this agreement, promptly contact Sensors & Software, Inc. at the address indicated at the end of this document.

Definition

The word *PRODUCT* as used herein defines any complete Sensors & Software, Inc. ground penetrating radar system comprised of the *HARDWARE PRODUCT* and *SOFTWARE PRODUCT*.

SOFTWARE PRODUCT Licence Agreement

In order to preserve and protect its rights under the applicable laws, Sensors & Software, Inc. (hereafter SSI) does not sell any rights to its software products. Rather, SSI grants the right to use its software, diskettes and documentation (hereafter collectively called *SOFTWARE PRODUCT*) by means of a *SOFTWARE PRODUCT* LICENCE. You acknowledge and agree that SSI retains worldwide title and rights to all its software and that the *PRODUCT* contains proprietary materials protected under copyright, trademark and trade secret laws.

Grant of SOFTWARE PRODUCT Licence

In consideration of payment of the license fee which is part of the price you pay for this product and your agreement to abide by the terms and conditions of this License Agreement, SSI grants to you, the Licensee, a non-exclusive right to use the SOFTWARE PRODUCT under the following conditions:

You may:

- use the *SOFTWARE PRODUCT* on a single workstation owned, leased or otherwise controlled by you
- copy the *SOFTWARE PRODUCT* for backup purposes in support of your use of the product on a single workstation

You may not:

- copy, distribute or sell copies of the SOFTWARE PRODUCT or accompanying written materials, including modified or merged *SOFTWARE PRODUCT* to others
- sell, license, sublicense, assign or otherwise transfer this license to anyone without the prior written consent of SSI
- modify, adapt, translate, decompile, disassemble or create derivative works based on the *SOFTWARE PRODUCT*

Termination

This license is effective until terminated. You may terminate the license at any time by returning the *PRODUCT* and all copies to SSI. The license will automatically terminate without notice by SSI if you fail to comply with any terms or conditions of this agreement. Upon termination, you agree to return the *SOFTWARE PRODUCT* and all copies to SSI.

Update Policy

SSI may create, from time to time, updated versions of its *PRODUCT*. At its option, SSI will make such updates available to licensees who have paid the update fee.

Product Limited Warranty

SSI warrants the *HARDWARE PRODUCT* to be free from defect in material and workmanship under normal use for a period of ninety (90) days from the date of shipment. Any computer systems purchased with the product are subject to the manufacturer's warranty and not the responsibility of SSI.

SSI warrants the diskettes on which the *SOFTWARE PRODUCT* is furnished to be free from defects in material and workmanship under normal use for a period of ninety (90) days from the date of purchase as evidenced by a copy of your invoice.

Except as specified above, the *PRODUCT* is provided "as is" without warranty of any kind, either expressed or implied, including, but not limited to, the use or result of use of the product in terms of correctness, accuracy, reliability, currentness or otherwise. The entire risk as to the results and performance of the *PRODUCT* is assumed by you. If the *PRODUCT* is defective or used improperly, you, and not SSI or its dealers, distributors, agents, or employees, assume the entire cost of all necessary servicing, repair or correction.

Limitation of Liability

SSI's entire liability and your exclusive remedy shall be, at SSI's opinion, either

- the replacement of any diskette or hardware components which do not meet SSI's Limited Warranty and which are returned to SSI postage prepaid with a copy of the receipt, or
- if SSI is unable to deliver a replacement diskette which is free of defects in material or workmanship, Licensee may terminate this agreement and have the license fee refunded by returning all copies of the *SOFTWARE PRODUCT* postage prepaid with a copy of the receipt.

If failure of the diskette or hardware component resulted from accident, abuse or misapplication, SSI shall have no responsibility to replace the diskette, refund the license fee, or replace the hardware component.

NOTE: DO NOT TAMPER WITH UNIT. No user serviceable parts in unit. If tampering is evident, warranty is void and null.

No oral or written information or advice given by SSI, its dealers, distributors, agents or employees shall create a warranty or in any way increase the scope of this warranty and you may not rely on any such information or advice.

Neither SSI or anyone else who has been involved in the creation, production or delivery of the *PRODUCT* shall be liable for any direct, indirect, special, exemplary, incidental or consequential damages, claims or actions including lost information, lost profits, or other damages arising out of the use or inability to use this *PRODUCT* even if SSI has been advised of the possibility of such damages.

This warranty gives you specific rights. You may have other rights which vary from province to province, territory to territory and certain limitations contained in this limited warranty may not apply to you.

General

pulseEKKO®, Noggin®, SpiView®, and SnowScan®, are registered trademarks of SSI. No right, license, or interest to such trademarks is granted hereunder with the purchase of the *PRODUCT* or the *SOFTWARE PRODUCT* license.

Governing Law

In the event of any conflict between any provision in this license agreement and limited warranty and any applicable provincial legislation, the applicable provincial legislation takes precedence over the contravening provision. This agreement shall be governed and construed in accordance with the laws of the Province of Ontario, Canada.

Serviceability

Should any term of this agreement be declared void or not enforceable by any court of competent jurisdiction, the remaining terms shall remain in full effect.

Waiver

Failure of either party to enforce any of its rights in this agreement or take action against any other party in the event of a breach of this agreement shall not be considered a waiver of the right to subsequent enforcement of its rights or actions in the event of subsequent breaches by the other party.

Acknowledgement

You acknowledge that you have read this agreement, understand it and agree to be bound by its terms and conditions. You further agree that this agreement is the complete and exclusive statement of agreement between the parties and supersedes all proposals or prior agreements oral or written between the parties relating to the subject matter of this agreement.

Should you have any questions concerning this agreement, please contact in writing:

Sensors & Software Inc.
1091 Brevik Place
Mississauga, Ontario
Canada L4W 3R7
Tel:(905) 624-8909
Fax:(905) 624-9365
E-mail: radar@sensoft.ca

Noggin Smart Cart, Noggin, CartView and SpiView are trademarks of Sensors & Software, Inc..

TABLE OF CONTENTS

1 GENERAL OVERVIEW 1

2 ASSEMBLING THE SMART CART 2

2.1 Configuring the Smart Cart to Carry a Different Noggin System 10

3 ASSEMBLING THE SMART HANDLE SYSTEM 11

3.1 Smart Handle 12

3.2 Cabling 14
3.2.1 DVL to Sensor Cable 14
3.2.2 Odometer Cable 15
3.2.3 Smart Grip Cable 15

4 STARTING THE DIGITAL VIDEO LOGGER 16

4.1 Running a DVL Detached from a Smart System 18

5 NOGGIN 19

5.1 Overview of Noggin Menu Options 19
5.1.1 Run 19
5.1.2 Demo 19
5.1.3 Noggin Setup 19
5.1.4 Transfer All Buffers 19
5.1.5 Delete All Buffers 20
5.1.6 Upgrades 20
5.1.7 Return 20

5.2 Noggin Screen Overview 21
5.2.1 Section A - Data Parameters 22
5.2.2 Section B - Data Display 22
Depth Lines 22
Battery Voltage Indicator 22
Start of Section Indicator 23
Fiducial Markers 23
5.2.3 Section C - Menu 24

5.3 Noggin Menu Options 24
5.3.1 Exit 24
5.3.2 Print Menu 24
Printing Data to an attached Printer 24
Transferring Data to an External PC 26
5.3.3 View Menu 27
5.3.4 Calib. (Calibration) Menu 27
Hyperbola Matching 27
Target of Known Depth 29
Selecting a Media 30

Input a Velocity Value 30
5.3.5 Depth Menu 31
5.3.6 Gain Menu 31
5.3.7 Start Menu 32
5.3.8 Stop Menu 33

5.4 Noggin Data Acquisition 34
5.4.1 Collecting Data using the Odometer 34
Reducing Data Quality by Moving too Fast 35
Backing up the System to Pinpoint Target Positions 35
5.4.2 Collecting Data using Continuous Operation (No Odometer) 36
5.4.3 Saving Data 36
5.4.4 Deleting Data 36
5.4.5 Special Keys 37
5.4.6 Error Messages 37

5.5 Noggin Setup 38
5.5.1 Editing DVL Settings 38
Default Settings 38
Time and Date 38
Save Data Mode 38
Units Used 38
Odometer Markers 39
Odometer Calibration 39
Cart Direction 40
Odometer Active 40
Label Size 40
Noggin System 40
Station Interval 41
Station Interval 42
Linear Gain 43
Arrow Reference 44
Window Zooming 44
GPS Setup Menu 45
Mode 46
Baud Rate 47
Stop Bits 47
Data Bits 47
Parity 47
End String 48
System Test #1 48
System Test #2 49
Transfer Rate 49
Reset Counter 49

5.6 Noggin Buffer File Management 50
5.6.1 Transferring all Buffer Files to an External Computer using the WinPXFER Program 50
Connecting the Digital Video Logger to an External Computer 50
Installing and Running the WinPXFER Program 51
Transferring Buffer Files 52
Parallel Port not bi-directional Error 52
Viewing SPI Files in SpiView on the External PC 53
5.6.2 Deleting all Buffer Files on the DVL 53

5.7 Upgrades 53

5.8 Advanced Topics **54**
5.8.1 How Depth is Determined 54

6 NOGGIN*PLUS* **55**

6.1 Overview of Noggin*plus* Menu Options **55**
6.1.1 Line 55
6.1.2 Grid 55
6.1.3 Setup 56
6.1.4 File Management 56
6.1.5 Run without Saving Data 56
6.1.6 Utilities 56
6.1.7 Return 56

6.2 Noggin*plus* Data Acquisition **57**
6.2.1 Replaying or Overwriting Data 58
6.2.2 Screen Overview 58
6.2.3 Section A – Position Information 59
6.2.4 Section B - Data Display 59
Depth Lines 59
Fiducial Markers 59
6.2.5 Section C - Menu 60
6.2.6 Gain 60
6.2.7 Collecting Data using the Odometer 61
Reducing Data Quality by Moving too Fast 62
Backing up the Cart to Pinpoint Target Positions 62
6.2.8 Calib. (Calibration) Menu 63
Hyperbola Matching 63
Target of Known Depth 65
6.2.9 Error Messages 66

6.3 Noggin*plus* Setup **67**
6.3.1 System Parameters 67
Depth 67
Velocity 68
Depth Units 68
Noggin System 69
Stacks 69
Linear Time Gain 69
Position Units 70
6.3.2 Cart Parameters 70
Cart Direction 70
Odometer Active 70
Auto Start 70
Arrow Offset 70
Trip Menu 71
Transfer Rate 71
Odometer Number 71
6.3.3 Line Parameters 72
Start Position 72
Line Direction 72
Station Interval 72
Station Interval 74
6.3.4 Grid Parameters 75
Grid Type 75

X Lines Only - Forward 75
Y Lines Only - Forward 76
XY Lines - Forward 76
Survey Format 77
X Lines Only – Forward and Reverse 77
Y Lines Only – Forward and Reverse 78
XY Lines – Forward and Reverse 78
Grid Dimensions 79
Line Spacing 79
6.3.5 GPS Parameters 80
Mode 81
Baud Rate 83
Stop Bits 83
Data Bits 83
Parity 83
End String 83
System Test #1 84
System Test #2 84
6.3.6 Set Defaults 84

6.4 Noggin*plus* File Management 85
6.4.1 Transferring all Data Files to an External Computer using the WinPXFER Program 85
Connecting the Digital Video Logger to an External Computer 85
Installing the WinPXFER Program 85
Exporting Data to an External Computer 86
Parallel Port not bi-directional Error 87
Viewing Data Files on the External Computer 88
6.4.2 Deleting Data on the DVL 88

6.5 Noggin*plus* Utilities 89
6.5.1 Time and Date 89
6.5.2 Odometer Calibration 89
6.5.3 Upgrade 90
6.5.4 System Information 90

7 TROUBLESHOOTING 91

7.1 Power Supply 91

7.2 System Communications 91

7.3 System Overheating 92

7.4 DVL Problem 92

7.5 Noggin Problem 93

7.6 Contacting Sensors & Software Inc. 93

8 CARE AND MAINTENANCE 94

8.1 Battery Care 94

8.2 DVL Internal Battery 94

8.3 Skid Pads 95

APPENDIX A NOGGIN*PLUS* DATA FILE FORMAT A-1

APPENDIX B HEALTH AND SAFETY CERTIFICATION B-1

APPENDIX C FCC REGULATIONS.....C-1

APPENDIX D OPERATION OF SHUT OFF SWITCH.....D-1

References

1 General Overview

Noggin Smart Systems are integrated ground penetrating radar (GPR) data acquisition platforms. Once the unit has been assembled and powered up you can be carrying out a GPR survey in less than a minute. There are two different configurations available, the Smart Cart system and the Smart Handle system (see Figure 1-1).

The Smart Cart system consists of the cart structure, a Noggin, an odometer wheel, a digital video logger (DVL), and a battery. Section 2 describes how to assemble a Smart Cart system.

The Smart Handle system consists of the Smart Handle, a Noggin, an odometer wheel, a digital video logger (DVL), and a battery. Section 3 describes how to assemble a Smart Handle system.

Each Smart System's DVL comes with all the necessary software installed. This includes software to acquire data as well as software to replay data files. Data management software allows the data to be transferred to an external computer for further processing and/or plotting.

Figure 1-1: Noggin Smart Cart system (left) and Noggin Smart Handle System (right).

2 Assembling the Smart Cart

The Noggin Smart Cart can be configured for Noggin 250, Noggin 500 or Noggin 1000 operation. For the Noggin 250 Smart Cart, refer to Figure 2-10. For the Noggin 500 Smart Cart, refer to Figure 2-11 and for the Noggin 1000 Smart Cart, refer to Figure 2-12.

Figure 2-1: Fully assembled Smart Cart

The Noggin Smart Cart comes fully assembled but in collapsed position (Figure 2-2). The steps necessary to have a fully functioning system are:

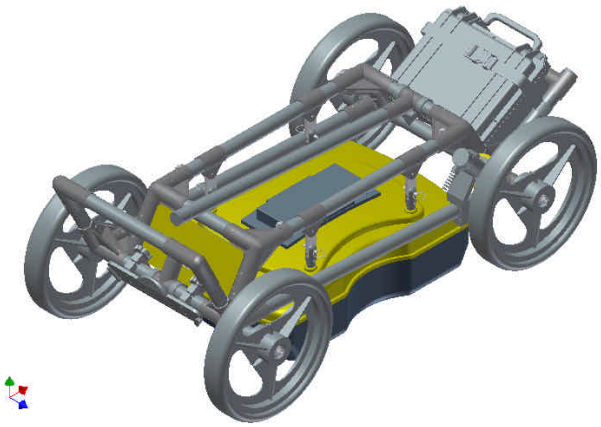

Figure 2-2: Smart Cart in collapsed position.

1. Attach wheels (if necessary): The Smart Cart may have been shipped without the wheels attached or they may have been removed for storage. If this is the case, find the axle for each wheel, press the button on the end of the axle, and insert the axle through the wheel and into the cart frame. This is shown in Figure 2-3.

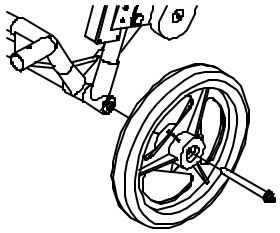

Figure 2-3: Attaching the wheel.

2. Unfold the Handle: Refer to Figure 2-4. Pull the ring to remove the handle Clevis pin from the handle support arm. Raise the handle support arm and then the handle and place the open end of the T-shaped tube on the handle onto the end of the support arm (Step 1). Then lock the handle into position by lining up the hole in the support arm with the hole in the T-shaped tube and inserting the handle Clevis pin (Step 2). (When folding the Smart Cart back up always ensure the handle folds down before the handle support arm.)

With the system unfolded, make sure the small odometer wheel makes good contact with the side of the cart wheel. If this contact is too loose, the odometer wheel may slip, resulting in erroneous position measurements. If the odometer wheel seems loose, use

a ¼ inch Allen (hexagonal) wrench to loosen the screws on the side of the odometer (see Figure 2-10 or Figure 2-11) and pivot the entire odometer unit until the small odometer wheel makes good contact with the side of the cart wheel. Then tighten the screws to lock the odometer wheel in this position. After this has been done, it will be necessary to re-calibrate the odometer (see Section 6.5.2).

Figure 2-4: Smart Cart set up.

3. Attach the Noggin: Before the Noggin unit can be attached to the Smart Cart, the 4 swivel adapters (with attached Clevis pins) must be attached to the mounting posts on the Noggin (see Figure 2-5). Set the swivel adapter down on the post. It may be necessary to loosen the Allen (hexagonal) screw before the swivel adapter will slide down into the proper position. This can be done using the 1/8" Allen (hexagonal) wrench provided. Now, tighten each screw and then loosen ¼ turn so that the swivel adapters are firmly attached to the post but can still rotate. **DO NOT OVER-TIGHTEN!**

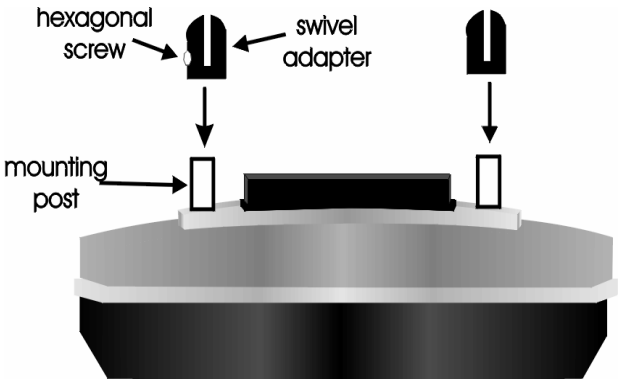

Figure 2-5: Attaching the swivel adapters to the Noggin 250.

Once all 4 swivel adapters are attached, the Noggin can then be attached to the Smart Cart.

The Noggin is usually attached to the cart with the long axis of the Noggin unit parallel to the wheels on the cart (see Figure 2-10 ,Figure 2-11 and Figure 2-12). For this orientation, make sure the 37 socket female electrical receptacle on the Noggin faces the back of the cart so that the cable on the cart will reach the receptacle.

It is also possible (but not usual) to attach the Noggin to the cart with the long axis of the Noggin perpendicular (at right angles) to the wheels on the cart. For this orientation, make sure the 37 socket female electrical receptacle on the Noggin is on the same side of the cart as the odometer so that the cable on the cart will reach the receptacle.

Noggin 250: Remove the Clevis pins from the swivel adapters. Now, on the bottom of the cart, locate the 4 oval, moveable hangers suspended from the frame of the cart (see Figure 2-6). Notice that each hanger has a hole in it. To attach the Noggin 250 to the cart, place each hanger into the slot on the top of the swivel adapters, line up the holes and insert the Clevis pin.

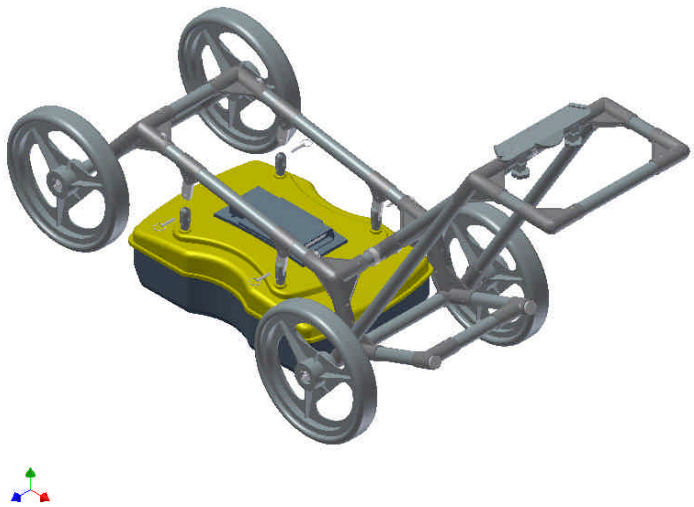

Figure 2-6: Attaching the Noggin 250 to the cart.

Noggin 500 and Noggin 1000: Remove the Clevis pins from the swivel adapters. Now, on the bottom of the cart, locate the two, flat, moveable crossbars suspended from the frame of the cart. If the crossbars are attached, go to step B.

Step A: If the crossbars are detached from the cart, they will need to be attached before attaching the Noggin to the cart (see Figure 2-7 top). To attach the cross bars, use the 4 oval, moveable hangers suspended from the frame of the cart. Insert the hanger into the slot on the crossbar, line up the holes and insert the Clevis pin.

Step B: Notice that each crossbar has 2 holes, one on each side. To attach the Noggin 500 to the cart, place the crossbars into the slots on the top of the swivel adapters, line up the holes and insert the Clevis pins.

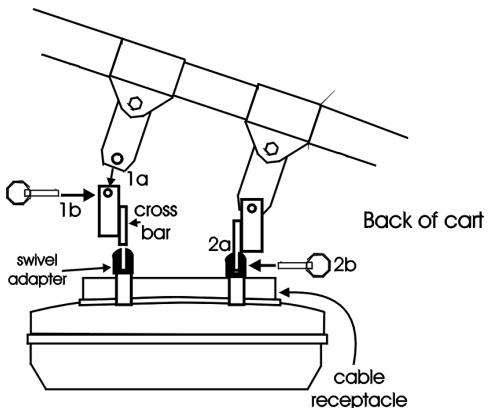

Attach Cross bars to the cart (if necessary).
a) Line up holes.
b) Insert Clevis pin.

Attach Noggin to cross bar.
a) Insert cross bar into swivel adapter.
b) Insert Clevis pin.

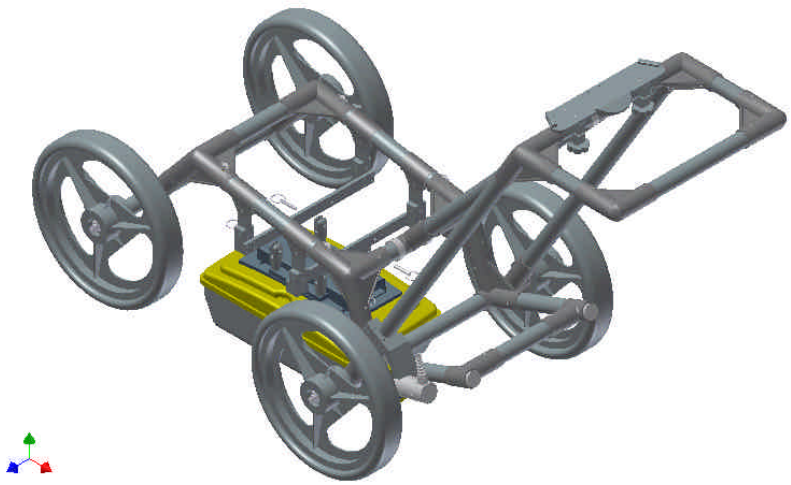

Figure 2-7: Attaching the Noggin 500 and Noggin 1000 to the cart.

Connect the cable with the 37-pin male D connector to the Noggin and secure this attachment by tightening the hand screws.

4. Attach the Digital Video Logger (DVL): The bottom of the Digital Video Logger is designed to slide onto the support shelf attached to the Smart Cart (Figure 2-8). Line up the bottom of the Digital Video Logger with the shelf and slide it back onto the shelf. Push the Digital Video Logger back far enough so that the flexible clip on the front of the shelf catches and holds the Digital Video Logger firmly in place. Wiggle the DVL to make sure it is firmly snapped in before letting go of the unit. (To remove the Digital Video Logger from the Smart Cart, this clip must be flexed downward as the DVL is slid forward off of the shelf.

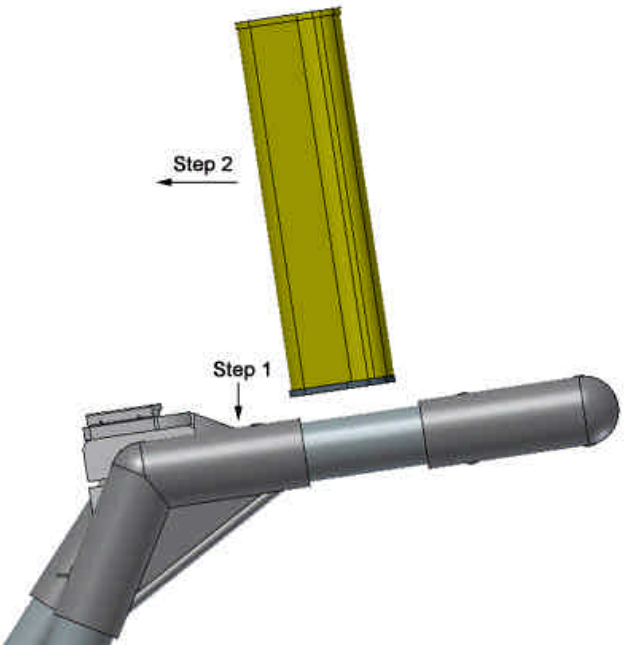

Figure 2-8: Attaching the digital video logger (DVL). Step 1: Depress flexible clip. Step 2: Slide DVL onto shelf.

Once the Digital Video Logger is in place, attach the cable with the 37-socket female D-connector to the 37-pin receptacle on the back of the Digital Video Logger. This attachment can be secured by tightening the hand screws.

The Digital Video Logger can be pivoted to adjust the view angle. If it is difficult to pivot the Digital Video Logger, slightly loosen the hand screws on the bottom of the support shelf.

Figure 2-9: The Noggin Smart Cart battery.

5. Attach the Battery Unit: Set the battery unit onto the lower inclined shelf on the back of the Smart Cart (see Figure 2-9). The handle on the battery unit should be accessible from the back of the cart with the cable receptacle on the right. The battery unit should rest in this area without moving. To secure the battery onto the cart, put the straps provided over the battery unit and lock into place with the plastic buckle. Tighten the straps if necessary.

With the Noggin Smart Cart completely assembled, connect the round 4-pin battery cable to the receptacle on the side of the battery.

Note the battery mass forms part of the overall cart balance which enables users to raise the front wheels with a minimum amount of force. This allows users to easily change direction and assure the rear wheels are always in contact with the ground.

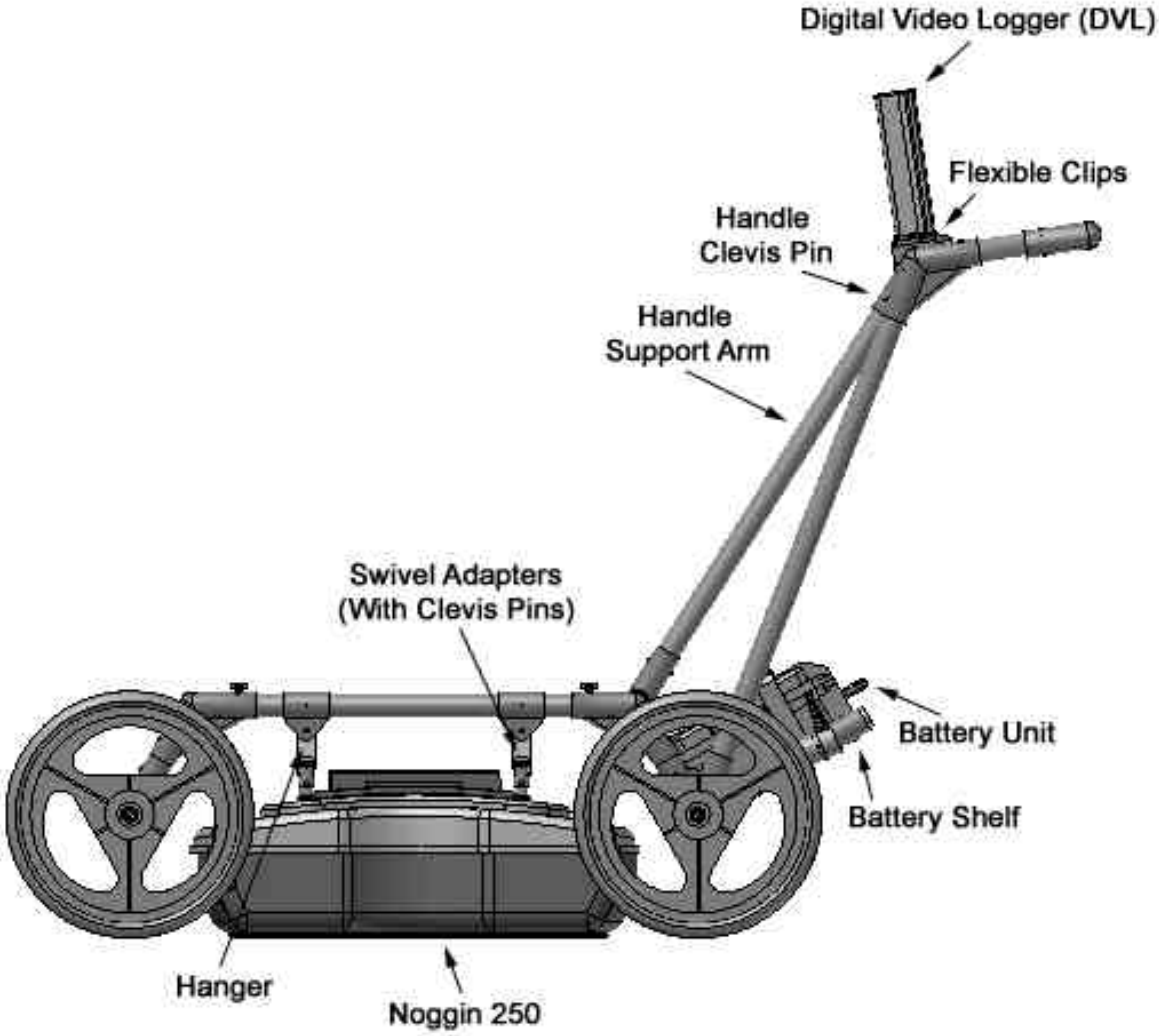

Figure 2-10: Noggin 250 Smart Cart

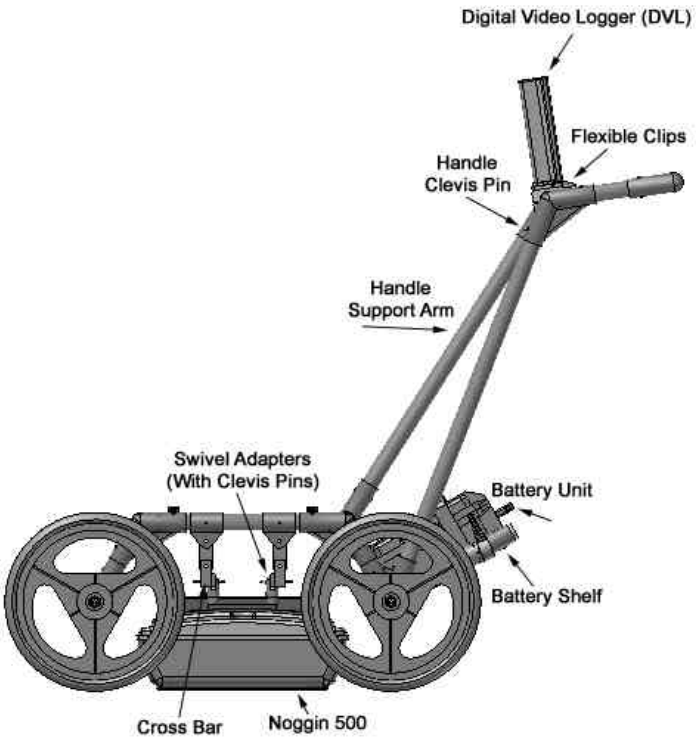

Figure 2-11: Noggin 500 Smart Cart

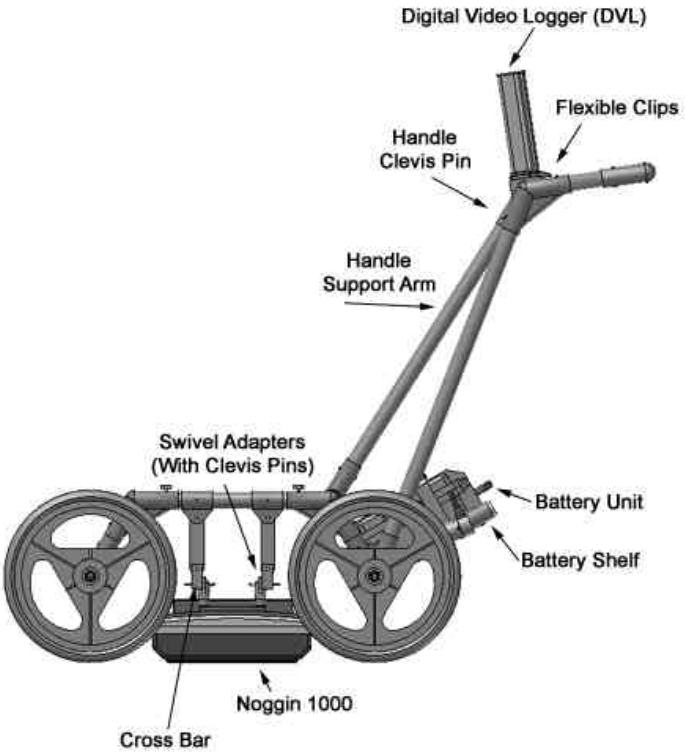

Figure 2-12: Noggin 1000 Smart Cart

2.1 Configuring the Smart Cart to Carry a Different Noggin System

The Noggin Smart Cart can be configured to carry a Noggin 250, Noggin 500 or a Noggin 1000 system. This can be done by replacing the two support arms on the cart (see Figure 2-13) with the support arms for another system. Each arm is attached to the cart by two hand screws. For each arm, remove the screws, detach the arm from the cart and replace it with the new arm.

Figure 2-13: Changing the Smart Cart's support arms to carry a different Noggin system.

3 Assembling the Smart Handle System

Figure 3-1: Smart Handle System with a Noggin 1000

3.1 Smart Handle

The Smart Handle consists of the Smart Handle grip and Smart Handle extension. These two pieces are put together (see Figure 3-2 and Figure 3-3) and then attached to the Noggin (see Figure 3-4). The system can be deployed without the handle extension as shown in Figure 3-5 and Figure 3-6.

Figure 3-2: Simply push the Smart Handle grip into the Smart Handle extension

Figure 3-3: To separate them, push on the large grey button on the extension and pull them apart

Figure 3-4: Now connect the other end of the Smart Handle extension to the Noggin by simply pushing it in.

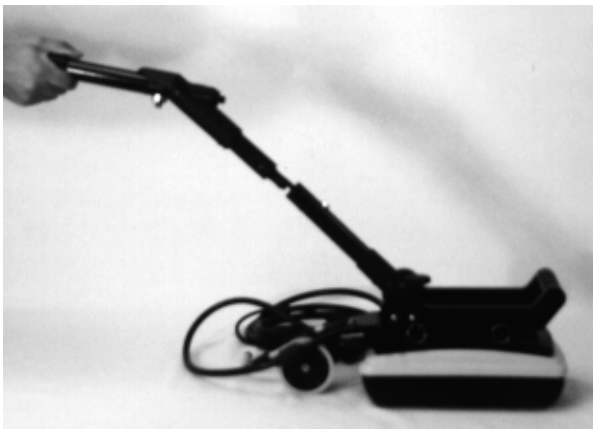

Figure 3-5: For wall and ceiling scans in tunnels, it may be easier to just connect the Smart Handle grip to the Noggin without the extension.

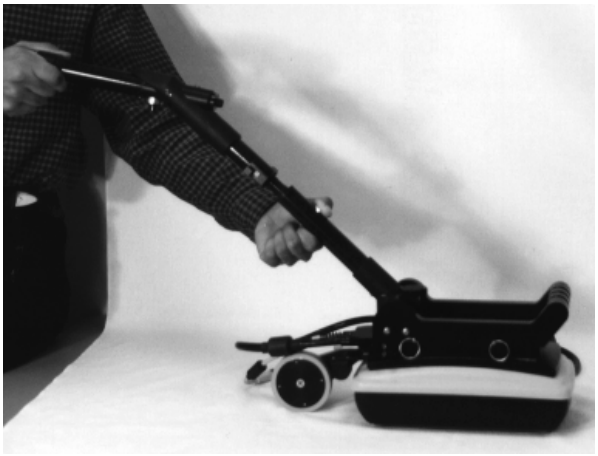

Figure 3-6: To separate either the short or long handle from the Noggin, press on the large grey button on the pole extending from the Noggin and pull apart.

3.2 Cabling

3.2.1 DVL to Sensor Cable

The DVL to Noggin cable is a Y-shaped cable with 3 connections; one to the Noggin sensor, one to the DVL and one to the power supply (battery or AC).

Noggin Connection: The first connection is to attach the 37-pin connector on the cable to the 37-socket connector on the Noggin. Use the thumb screws to secure this connection.

From the Noggin, the DVL to Sensor Cable runs up the side of the Smart Handle. Use the guides (clips) on the side of the Smart Handle to attach the cable to it (see Figure 3-7).

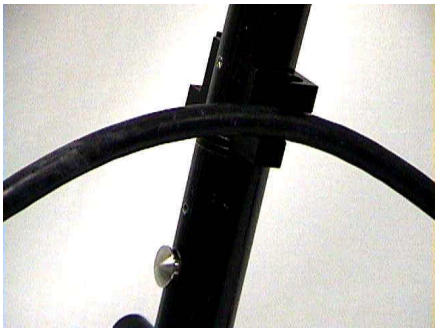

(a)

(b)

Figure 3-7: a) Insert cable - b) twist to grip

DVL Connection: The second connection from the DVL to Sensor Cable is to the DVL. One end of the Y-shaped cable has a 37 socket connector. This end plugs into the 37-pin connector on the back of the DVL.

Power Connection: The third connection on the Smart Handle cable attaches to a power supply. The round, 4-pin connector attaches to either the standard battery or optional AC adapter.

3.2.2 Odometer Cable

The cable connecting the odometer or positioning wheel comes already installed at the factory.

3.2.3 Smart Grip Cable

The Smart Grip Cable is used to connect the Smart Handle button and beeper into the system. The Smart Grip Cable is a light grey, two part cable (pre-assembled) that connects from the Noggin to the end of the Smart Handle grip. The connection at the Noggin may already be made when the system is pulled from the box. The other end of the cable attaches to the connector at the bend of the Smart Handle grip (see Figure 3-8). Again, this cable can run up the side of the Smart Handle using the guides (clips) to secure the cable to it.

Figure 3-8: The Smart Grip Cable attaches to the end of the Smart Handle Grip. This connects the Smart Handle button (extreme left, bottom) and beeper (not shown) into the system.

4 Starting the Digital Video Logger

Once all the cable connections are made between the Noggin, the Digital Video Logger (DVL) and the battery, the upper red LED light on the DVL panel should be lit. If the battery voltage is low, the light will flash for about 30 seconds and go out. If the light flashes or does not appear, check the connections and make sure the battery is fully charged. (See Section 8.1 for more information on battery care.)

The voltage indicator can be helpful for identifying when the battery needs to be recharged. If the battery voltage drops too low the DVL will cease to operate.

The front of the DVL is shown in Figure 4-1. To start the system, press any button on the front panel. The DVL will begin to beep indicating it is booting up. The lower red LED on the front panel should illuminate.

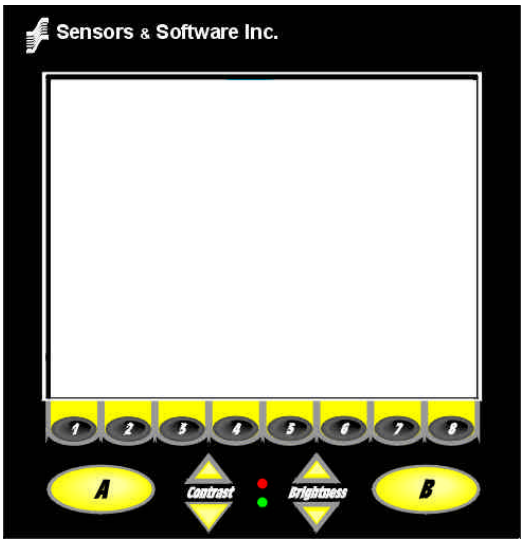

Figure 4-1: Digital Video Logger (DVL) face

At this stage, the Noggin unit will still be powered down. Once Noggin action is requested (see later menu items), the DVL will enable power to the Noggin. If the Noggin is receiving power, the red LED light on the connector to the Noggin will be illuminated.

The water-resistant membrane keypad has a number of buttons that can be pressed to perform various tasks. Note that the buttons on the membrane keypad sometimes need to be pressed hard to register.

Menu Buttons: The yellow buttons labelled 1 to 8 correspond to menu choices that appear listed on the screen or along the bottom of the screen when the Digital Video Logger is turned on.

In addition, there are two general-purpose buttons labeled A and B. All buttons are DVL application dependent and roles change. The operation will be self-explanatory from the display screen.

Screen: The DVL screen is a grayscale LCD selected for its wide temperature range and visibility in sunlight. Visibility can be a major problem with viewing GPR data displays outdoors and considerable effort has been expended on getting a readily visible outdoor display.

Brightness: The yellow Brightness control arrows are used to increase and decrease the screen brightness. For example, increasing the Brightness setting may improve the visibility of the screen when outside on a sunny day. Note, however, that increasing the screen brightness also increases battery consumption so don't use a bright screen unless necessary.

Contrast: The yellow Contrast control arrows are used to increase and decrease the screen contrast. For example, increasing the Contrast setting may improve the visibility of weaker features on the screen. Adjusting the contrast has little effect on battery consumption.

Temperature sensors within the DVL automatically compensate the screen setting so that manual adjustments of Brightness and Contrast should seldom be needed after initial setup.

Once the Digital Video Logger powers up, the Main Menu is displayed with 3 choices:

A – NOGGIN
B – NOGGIN PLUS

5 – POWER OFF

12.1 V 38°C Rev 3.00
100°F

- Pressing the A button starts the software for standard Noggin systems. Details about the Noggin system software can be found in Section 5.

- Pressing the B button starts the software for Noggin^{plus} systems. Details about the Noggin^{plus} system software can be found in Section 6.

- Pressing the 5 button will turn the DVL off.

- **Note that Noggin^{plus} systems will operate with both the Noggin and Noggin^{plus} software while standard Noggin systems will only operate with the Noggin software.**

This screen also displays the following information:

- **Battery Voltage:** The system will shut down when the battery voltage reaches 10.2 Volts (see Section 8.1 for more details on the battery).
- **Temperature:** The internal temperature of the DVL is displayed on this screen in Celsius and Fahrenheit.
- **Software Version:** The version of the software loaded on the DVL.

When the Smart Cart is not being used, do not leave the battery plugged in. The system draws about 0.1 amps even when it is powered off and this will gradually drain the battery.

4.1 Running a DVL Detached from a Smart System

When collecting data with a Smart System, the DVL is powered by the system battery. It is possible to detach the DVL from the Smart Cart (see Figure 2-8) or the Smart Handle system and use it away from the system to review, print or download data. There are 2 ways to power the DVL away from the Smart System and both involve using optional accessories.

The optional DVL II to Power Supply Cable allows the user to power the DVL away from the cart using the system battery. As shown in Figure 4-2, the cable connects the battery to the 9-socket connector on the back of the DVL.

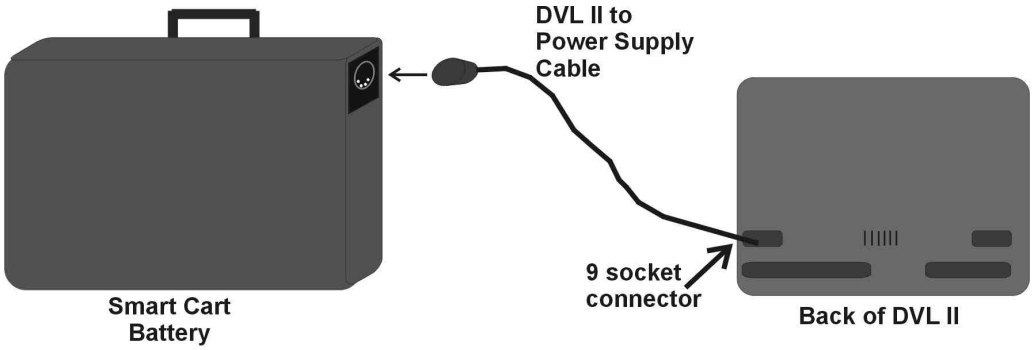

Figure 4-2: The optional DVL II to Power Supply cable can be used to power the Digital Video Logger (DVL) from the system battery.

To avoid having to use the system battery to power the DVL, an optional AC power supply is available. This, when combined with the DVL II to Power Supply Cable, allows the user to power the DVL away from the cart using AC power. As shown in Figure 4-3, the AC power supply connects to the DVL II to Power Supply Cable which connects to the 9 socket connector on the back of the DVL.

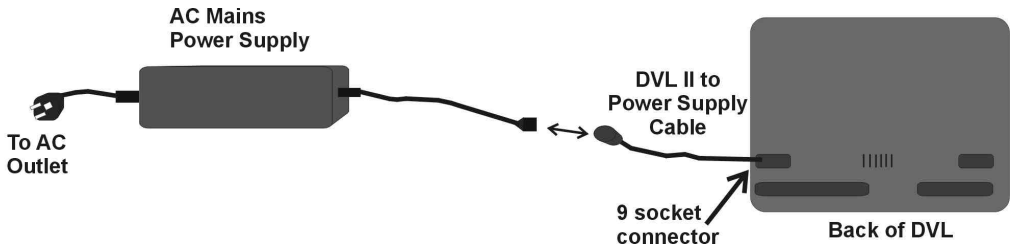

Figure 4-3: The optional DVL II to Power Supply cable can be combined with an optional AC power supply to power the Digital Video Logger (DVL) without the system battery.

5 Noggin

5.1 Overview of Noggin Menu Options

The Noggin main menu has the following choices:

A – RUN
B – DEMO

1 – NOGGIN SETUP
2 – TRANSFER ALL BUFFERS
3 – DELETE ALL BUFFERS
4 – UPGRADES
7 – RETURN

12.1 V Rev 6.00

5.1.1 Run

Pressing the A button starts the Noggin data acquisition program (see Section 5.4).

5.1.2 Demo

Pressing the B button starts the Noggin Demonstration program. This program simulates data acquisition (without actually moving the cart) by displaying a default data set. This data set cycles continuously until the user exits from the demo program. This allows the user to see and experiment with the different menu items and different settings to see the effect they have on the data presentation.

It is useful to run the demonstration program while reviewing the Noggin Screen Overview described in Section 5.2 and Noggin Menu Options described in Section 5.3.

5.1.3 Noggin Setup

There are many background setup parameters related to the Noggin Smart Cart operation that can be edited. This menu allows the user to display and change various settings for different aspects of the Smart Cart system. The user can also reset all the parameters to the factory default settings. See Section 5.5 – Default Settings.

5.1.4 Transfer All Buffers

Pressing the number 2 on the main menu transfers ALL the data buffers (up to 250 screens) from the DVL to an external PC. See Section 5.6.1.

5.1.5 Delete All Buffers

Pressing the number 3 on the main menu allows the user to delete ALL the data buffers currently saved on the DVL. See Section 5.6.2

5.1.6 Upgrades

Pressing the number 4 on the main menu puts the DVL into listen mode to allow a software upgrade to be transferred from an external PC to the DVL. Avoid pressing this button until the instructions in a software upgrade tell you to. Once pressed, the DVL must be powered down exit from this menu item. See Section 5.7.

5.1.7 Return

This button will return the user to main menu. See Section 4.

5.2 Noggin Screen Overview

The Noggin screen is shown in Figure 5-1. It is divided into 3 sections. The very top section (Section A) contains velocity, total depth and positioning information. The center section (Section B) contains the actual data and the bottom section (Section C) contains the menu.

Each screen of data is saved in the Digital Video Logger as an individual PCX graphics file called a SPI file. Although each screen is saved as an individual file, these files can be viewed together as a continuous chart up to 250 screens long. These data can be viewed on screen (see Section 5.3.3), printed directly to a printer attached to the DVL or transferred to an external computer (see Sections 5.3.2 and 5.6.1).

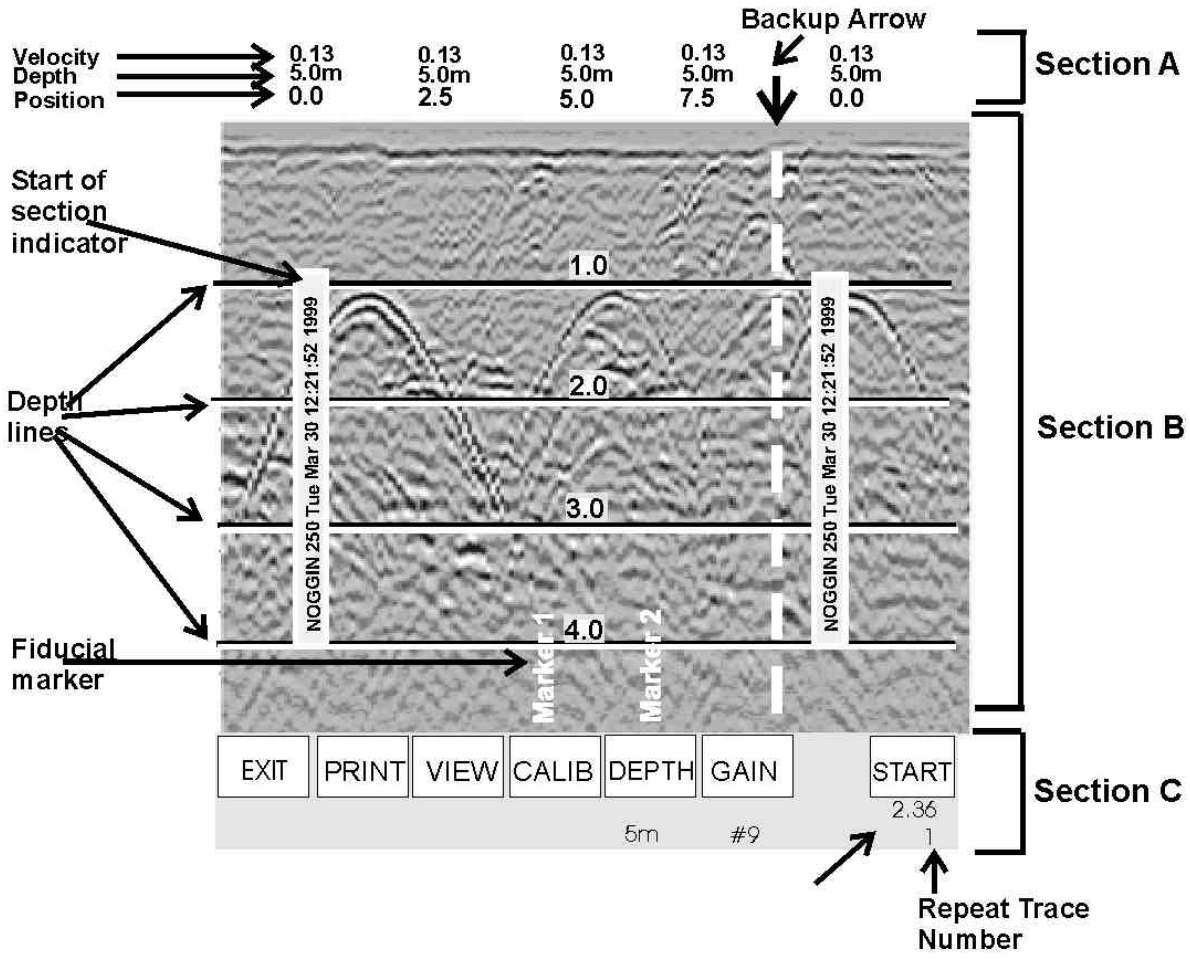

Figure 5-1: Noggin Data Acquisition Screen

5.2.1 Section A - Data Parameters

Section A displays three items:

1) The total depth to the bottom of the data image in Section B,
2) The velocity used to calculate the total depth and the depth lines (see Depth Lines in Section 5.2.2) and
3) The position indicator in meters or feet (depending on the odometer units set, see Section 5.5.1 – Units).

Rather than displaying total depth and depth lines the user can select to display the total time window in nanoseconds (see Section 5.5.1 - Units).

Note that it is possible to change the position label size (see Section 5.5.1 – Label Size).

5.2.2 Section B - Data Display

This section contains the actual data collected or replayed. The section also contains the depth indicator lines, battery voltage indicator (which is visible each time you start), start of section indicators, and any fiducial markers the user enters. See the sections below for more details.

Depth Lines

Depth lines are horizontal labelled lines indicating the estimated depth. They are very useful for getting depth estimates to features of interest in the data.

The positions of the Depth Lines are controlled by the current velocity value as well as the depth selected. See Section 5.3.5 on selecting different depths and Section 5.8.1 for more details on how depths are determined.

To display the correct depth, it is the responsibility of the user to calibrate the system to the correct velocity of the material (see Section 5.3.4 on how to calibrate the system).

Note that it is possible to change the depth units and the depth label size (see Section 5.5.1).

Battery Voltage Indicator

When the Start button is pressed, the current battery voltage will be displayed on the extreme left side of the screen.

The voltage indicator can be helpful for identifying when the battery needs to be recharged. If the battery voltage drops below 10.5 volts the DVL will cease to operate and this monitoring capacity will not be available.

Start of Section Indicator

Any time the Start button is pressed, the current date and time are written vertically on the screen to indicate the start of a new section (see Section 5.5.1 on how to set time and date on the DVL). The position indicator is also reset to zero. The current date and time can be recorded in a field notebook along with the survey location to help the user organize where each section of data was collected (Figure 5-2).

Location: _____

Page ____ of ____

Date:_____
Operator:_____
Job #:_____

System			Survey				Battery
Buffer	Trace #	Speed#	Line	Start	End	Comments	Volts

Table 1: Field Notes Example

Figure 5-2: Example field notes

Fiducial Markers

A fiducial marker is text written vertically on the section at a specific position during data acquisition. Adding these markers during data acquisition is useful for recording significant positions or the positions of surface objects encountered during the survey.

The position and name of the object encountered at each marker can be recorded in a field notebook. Then, when the data are reviewed, these markers are visible right on the data section and can assist with data interpretation.

A fiducial marker is activated by pressing the A button on the DVL keypad during data acquisition.

Smart Handle systems: On Smart Handle systems, it is also possible to add a fiducial marker by quickly pressing the button on the Smart Handle during data acquisition.

The first time the A button (or Smart Handle button) is pressed, the text "Marker 1" will be written to the screen at the current position. The marker number will then increment each time it is pressed, for example, Marker 2, Marker 3 etc (see Figure 5-1).

Note that it is possible to automatically place a dashed vertical line at every position label (see Section 5.5.1 – Odometer Markers).

5.2.3 Section C - Menu

The bottom section contains the user menu selection and current program settings. This menu is described in more detail in Section 5.3.

During data acquisition it also displays the current odometer position and the Repeat Trace Number that indicates if the system is moving too quickly and reducing data quality (see Section 5.4.1).

5.3 Noggin Menu Options

The default menu selection is divided up into 7 sections: Exit, Print, View, Calib., Depth, Gain and Start. Each of these options is addressed below.

Execution of a menu item is done by pressing the key immediately below the menu item. Pressing the key will change the setting for that menu item. For example, pressing the key below the Depth menu item will start to cycle through the different depth settings available.

5.3.1 Exit

This button will terminate the Noggin program and return the user to Noggin main menu. The user can then run the Noggin again, run the demo program, change DVL settings, download data to an external PC, delete data or return to the main menu (see Section 3).

Note that when the Start button is pressed and data acquisition begins (see Section 5.3.7), the Exit button turns into a Stop button (see Section 5.3.8). Data acquisition must be stopped by pressing the Stop button before it is possible to exit from this menu.

5.3.2 Print Menu

This menu item allows the user to:

1) Print data images directly to an attached printer or,
2) Transfer one or more screens (or buffers) of data to an external computer (PC) as a single PCX graphics file. This type of transfer is appropriate when the user wants to transfer the data to an external computer for use with third-party graphics software packages like Microsoft Paint and Word.

Printing Data to an attached Printer

The Noggin data images can be printed directly to a few select, but common, printers. The supported printers are HP LaserJet printers, most Epson printers and the Seiko DPU5400 thermal printer. As well, any printer that can emulate these printers can be used (see your printer's User's Guide for emulation modes available). For example,

Canon BubbleJet printers can usually be configured to emulate an Epson and most HP printers will work using the Laser driver.

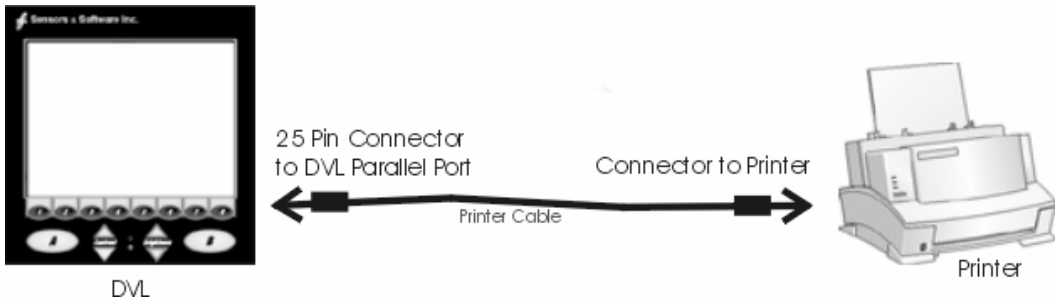

Figure 5-3: Attaching a printer to the DVL using a standard printer cable.

On the back of the DVL there is a standard 25 socket parallel port. A printer can be attached to the parallel port on the DVL with a standard printer cable, just as you would attach a printer to any computer (Figure 5-3).

Always power down the DVL before attaching a printer. This will prevent damage to the parallel port.

On the Digital Video Logger, after the Print option is selected, the user must define the section to be printed. The left edge of the page must be established first. This is done by lining up the left edge of the Digital Video Logger screen with the edge of the plot desired. Use the arrow buttons on the screen to move the section back and forth (Figure 4.1). A single arrow moves the image 8 pixels either right (▸), or left (◂). A double arrow will move the image 640 pixels or 1 full page to the right (▸▸) or left (◂◂). A single arrow with a vertical line will move the section either to the start (ψ◂), or end (▸ψ) of the section. If the start or end of section button is pressed, the image will page through one screen at a time. Data scrolling can be stopped by pressing any button. Once the left edge is in place, pressing the OK button will lock the left edge of the plot.

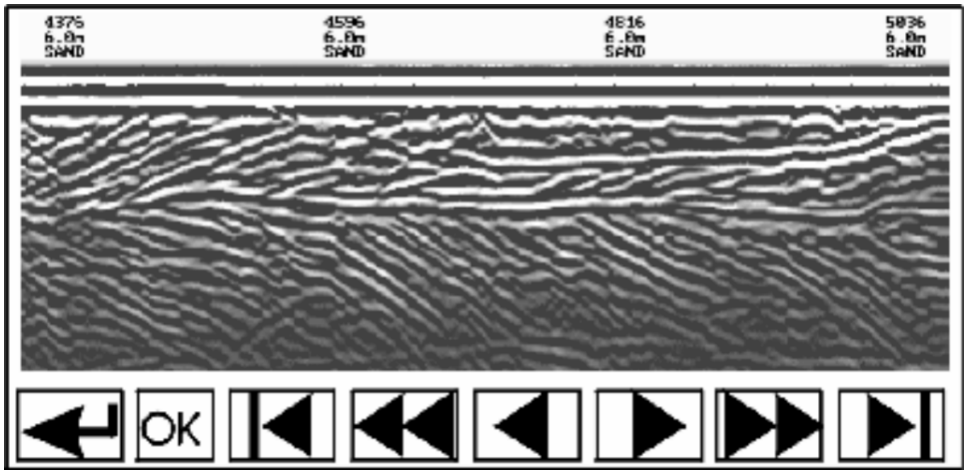

Figure 5-4: Noggin Print Screen

The right edge of the plot must now be defined the same as the left, however now using the right edge of the Digital Video Logger screen. Note that the right edge cannot exceed the left edge.

Next, select the type of printer attached (LASER for HP LaserJets and many other HP printers, EPSON for Epson or Canon BubbleJet printers or SEIKO for the Seiko DPU5400 Thermal printer). Text will appear on the bottom of the DVL screen indicating the image is printing on the printer.

If an error occurs during the printing operation, press the A button to Abort. Try to resolve the problem and try again. It may be necessary to turn the DVL off and power it back on and try printing again.

When the print is complete the user is returned to the Noggin screen.

Transferring Data to an External PC

There are two ways of transferring data to an external computer. The first is to transfer one or more screens (or buffers) of data as a single PCX graphics file. This method is described in this section. The second way of transferring data files to an external computer is to copy all the individual SPI (PCX) files from the DVL (see Section 5.6.1). This method is useful when the user wants to view the data on an external computer using the SpiView software. **SpiView is available from Sensors & Software Inc.**

The data transfer function can only be used after the parallel XFER cable has been connected from the DVL to the external computer and after the WinPXFER program has been installed on the external computer and run. Section 5.6.1 describes how to attach the parallel XFER cable and also how to install and run the WinPXFER program.

Once WinPXFER has been run on the external computer, it is ready to receive data image files from the Digital Video Logger.

On the Digital Video Logger, after the Print option is selected, the user must define the section to be printed. The left edge of the page must be established first. This is done by lining up the left edge of the Digital Video Logger screen with the edge of the plot desired. Use the arrow buttons on the screen to move the section back and forth (Figure 4.1). A single arrow moves the image 8 pixels either right (▸), or left (◂). A double arrow will move the image 640 pixels or 1 full page to the right (▸▸) or left (◂◂). A single arrow with a vertical line will move the section either to the start (ψ◂), or end (▸ψ) of the section. If the start or end of section button is pressed, the image will page through one screen at a time. Data scrolling can be stopped by pressing any button. Once the left edge is in place, pressing the OK button will lock the left edge of the plot.

The right edge of the plot must now be defined the same as the left, however now using the right edge of the Digital Video Logger screen. Note that the right edge cannot exceed the left edge.

Next, select a name for the image file from the options CART-1 to CART-4. As long as the WinPXFER program is running on the external PC, the file will be transferred to the current directory indicated by WinPXFER. When the data image file transfer is complete,