5. Electrical connection

5.1 Connection of the separated version

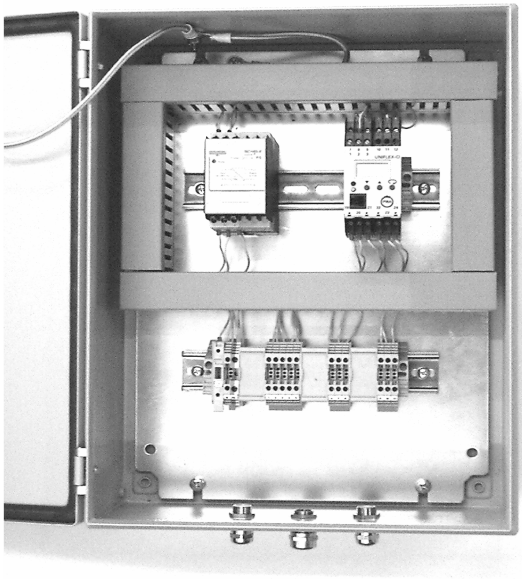

Fig. 9: Electrical connection of the separated version

pre-amplifier	
terminal no.	**connection**
1	input sensor: flex no. 1
2	input sensor: flex no. 2
3	input sensor: flex no. 3
4	input sensor: flex no. 4
w	input sensor: flex white
5	(–) GND
6	(+) signal
7	(–) GND
8	input (+)24 V DC
Evaluation unit	
terminal no.	**connection**
connection of supply voltage	
L	input supply voltage 230 V AC
N	input supply voltage 230 V AC
protective earth	ground
sensor connection	
1 (sensor)	(-) GND (from terminal 5 pre-amplifier)
2 (sensor)	(+) signal (from terminal 6 pre-amplifier)
3 (sensor)	(-) GND (from terminal 7 pre-amplifier)
4 (sensor)	output (+)24 V DC (to terminal 8 pre-amplifier)
5 (sensor)	ground (optional connection for shielded cable)
Outputs	
6	(-) GND output — current output — voltage output
7	(+) output 4...20mA — current output — voltage output
8	(+) output 0...10 V — voltage output
9	potential-free relay N.C.
10	potential-free relay COM
11	potential-free relay N.O.

5.2 Flow diagram of the separated version

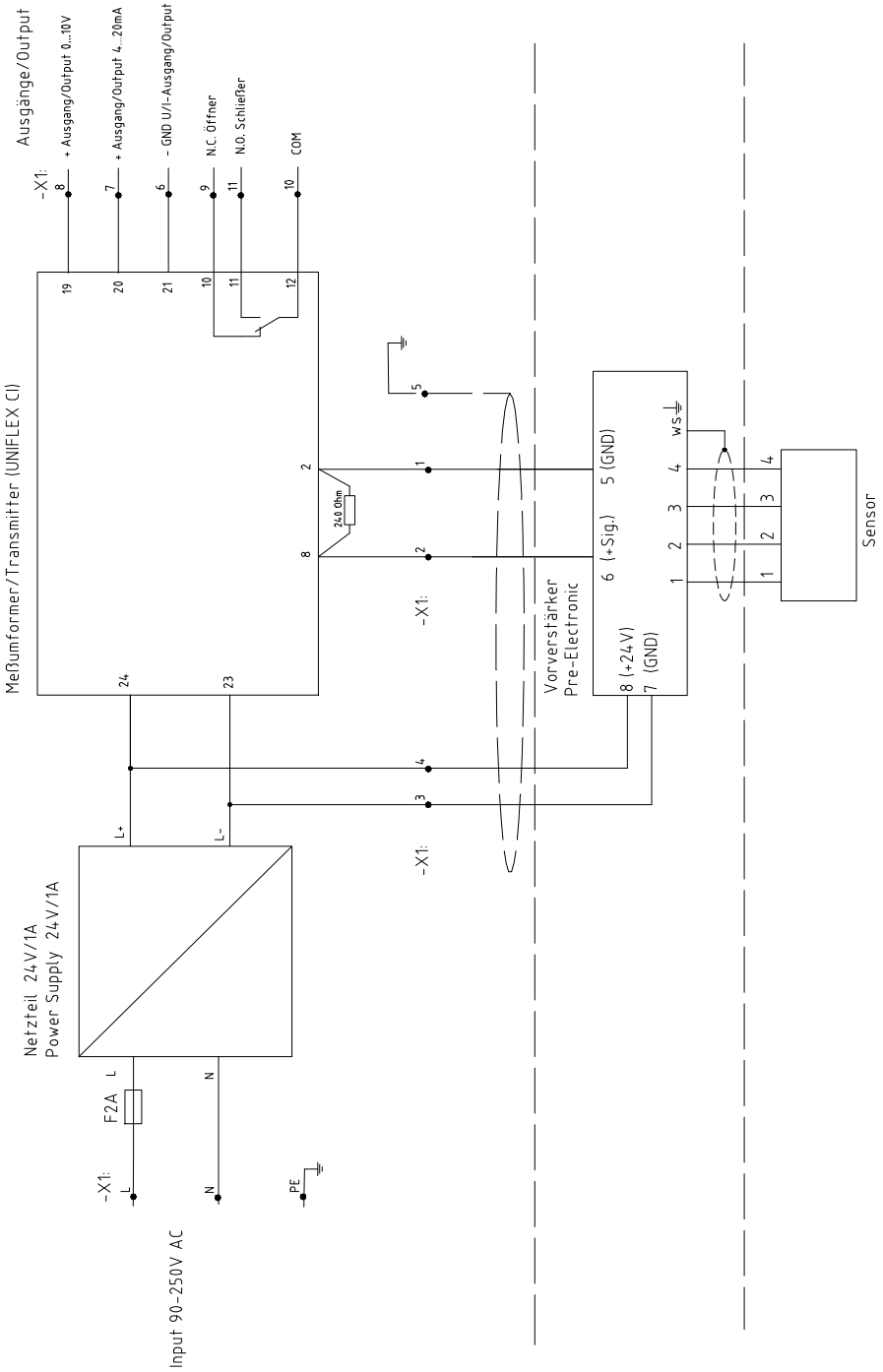

5.3 Connection compact version

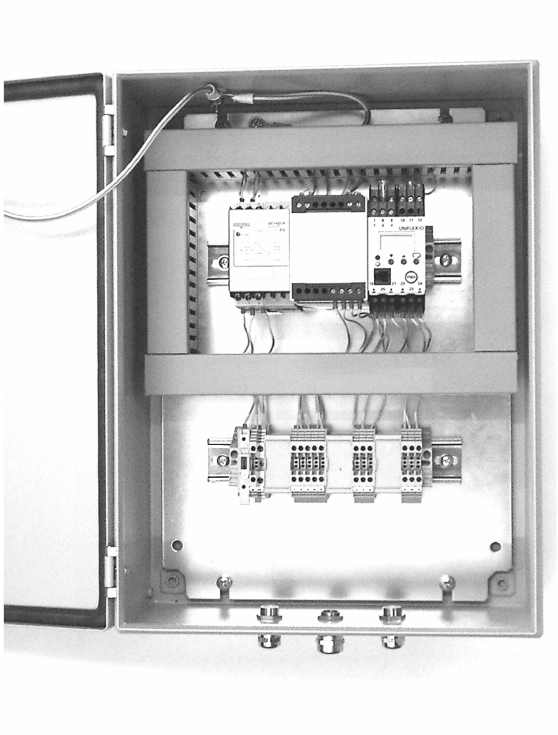

Fig. 10: Electrical connection of compact version

evaluation unit	
Terminal no.	**connection**
connection of the supply voltage	
L	input supply voltage 230 V AC
N	input supply voltage 230 V AC
protective earth	ground
sensor connection	
1 (sensor)	input sensor: flex no. 1
2 (sensor)	input sensor: flex no. 2
3 (sensor)	input sensor: flex no. 3
4 (sensor)	input sensor: flex no. 4
5 (sensor)	input sensor: flex white (shield)
outputs	
6	(–) GND
7	(+) output 4...20mA
8	(+) output 0...10 V
9	potential-free relay N.C.
10	potential-free relay COM
11	potential-free relay N.O.

current output

voltage output

5.4 Flow diagram of the compact version

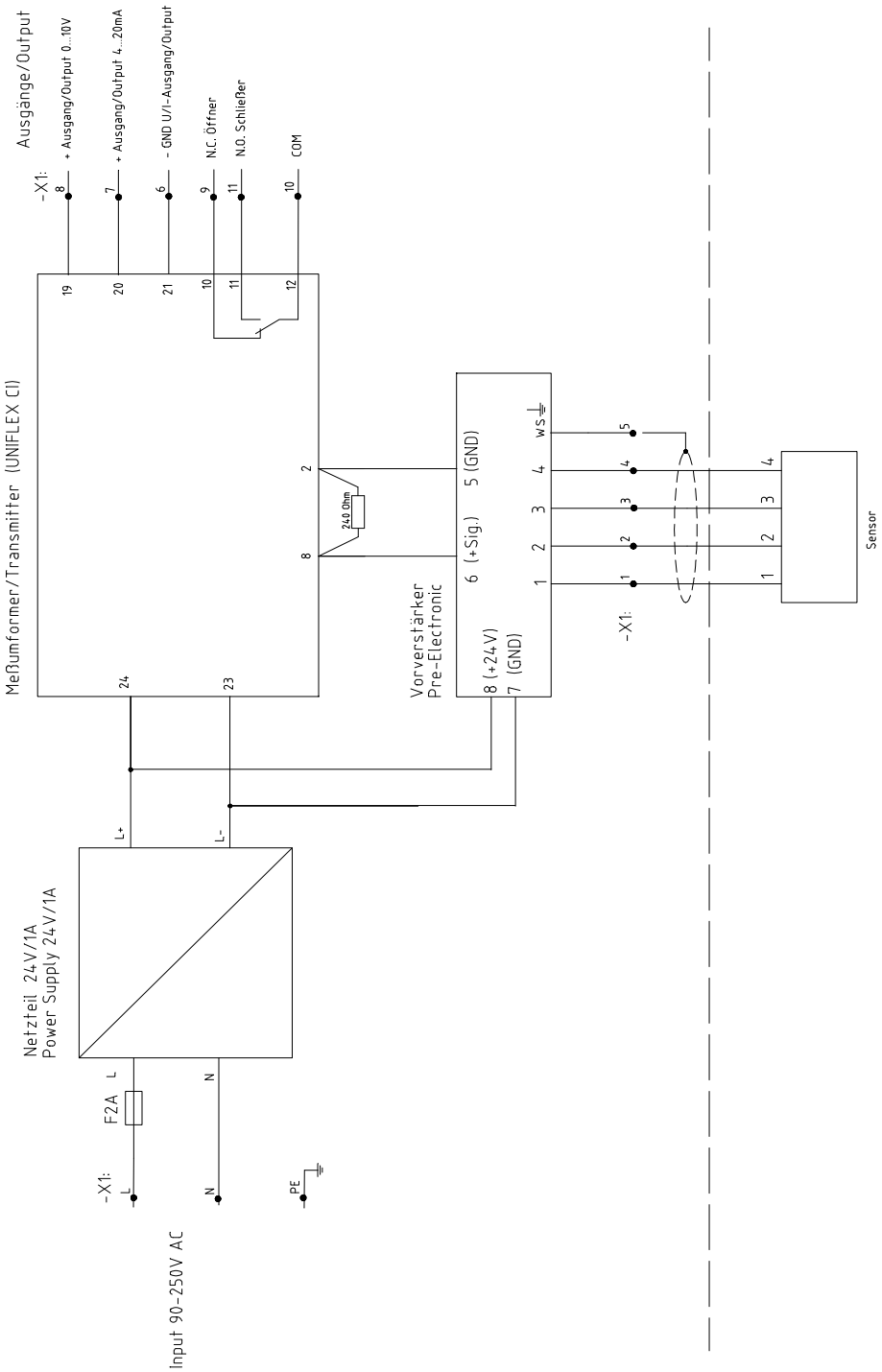

6. Commissioning

6.1 Adjustment of pre-amplifier

For start-up the measurement system it is necessary to adjust the pre-amplifier to the local conditions. After switching on the power supply there is at least a warm-up time of 15 minutes required before any adjustments starts.

Set the flow rate in the duct to the maximum rate. Open the cover plate of the pre-amplifier and look for the variable resistor P1. Now change the value which is displayed at the evaluation unit into a range between 3-4 by turning left or right at the variable resistor. Alternative you can measure the voltage range 3-4 Volt/DC direct at the terminal no. 5 + 6 at the pre-amplifier. In case that an adjustment is impossible please check once more again;

- The correct cabling between sensor and pre-amplifier and by the separated version the cable connection to the evaluation unit.
- The correct adjustment of the wall thickness at the sensor.

6.2 Adjustment of evaluation unit

Then the following displays appear one after the other in the four-digit display of the evaluation unit (for display and operational controls see section 7):

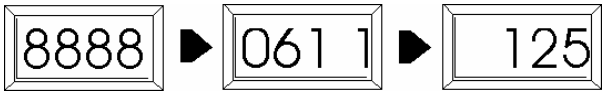

The first display shows the self-test, the second display shows the configuration menu, and the third display already shows the measured value.

Furthermore the green LED of the power supply is on as well as the green LED of the evaluation unit if the adjusted limiting value is not exceeded. If the limiting value is exceeded, the green and the red LEDs are on.

It is necessary for the first commissioning to carry out a calibration of the measuring system. It is sufficient to carry out a two-point-calibration (zero flow or lower reference value and maximum flow or higher reference value).

To do so, go on as follows:

Zero point calibration

The product flow in the duct is stopped for the zero point calibration. Take care that no flow can take place (all valves closed etc.).

Adjustment on the evaluation unit:
Press the arrow key ▼ for 5 seconds. The display now changes between **CL** and a value. Adjust the value with the help of the arrow keys ▼ ▲ to 0 (or lower reference value).

After 10 seconds the value is stored, the output signal was set to the value.

Maximum value calibration

A maximum or known flow rate (reference value) is adjusted in the tube for the maximum value calibration.

Adjustment on the evaluation unit:
Press the arrow key ▲ for 5 seconds. Now the display changes between **CH** and a value. Adjust the value with the help of the arrow keys ▼ ▲ to e.g. 100 or the reference value.

After 10 seconds the value is stored, the output signal was set to the value.

Reset to basic calibration parameters

To delete both calibration parameters press key ▼ during approx. 15 seconds.

The following default values have been set by the manufacturer:

Configuration menu Con1: **0541** corresponds to:

measurement value alarm	= N.C. contact
input voltage	= -3...13 V
type of sensor	= voltage
input circuit monitoring	= upscale

Configuration menu Con2: **1101** corresponds to:

output current	= 4...20mA
characterisation	= with scaling
computing function	= no
mains frequency suppression	= 50 Hz

The section 7. Operation explains how the parameters output signal, limiting value and filter constant can be adjusted.

With the adjustments described above, the measuring system is now ready for operation.

7. Operation

7.1 Operating elements

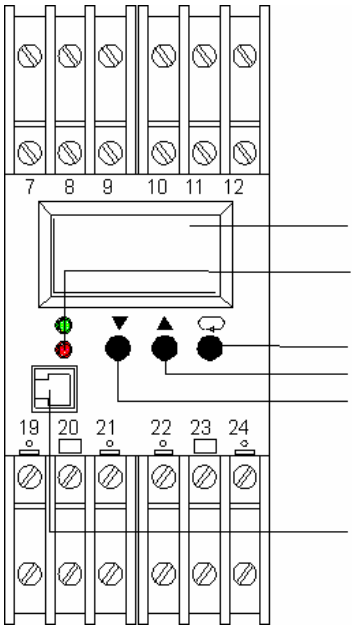

4.5-digit LC display

LED: red: indicator input circuit monitoring
green: indicator for supply voltage

Key: switch-over and confirmation

Key: increase value

Key: decrease value

4-pole connection for interface adapter (optional)

Fig. 11: Operating elements of the evaluation unit

7.2 Adjusting the output signal

Change to the configuration level by pressing for 5 sec. and once again for 5 sec. **Con1** is displayed.

Press another time and change to **Con2**.

Now adjust the value of **Con2** by using the arrow keys ▼ ▲ . The longer you press, the faster the value changes. (The value of Con1 must not be changed).

The numbers in Con2 have the following meaning:

1st digit: mains frequency suppression:

0 = 50 Hz;
1 = 60 Hz

2nd digit: characterisation:

2 = with customised linearization

3rd digit: computing function:

0 = no computing function (e.g. extract roots etc.)

4th digit: output signal

0 = 0...20 mA;
1 = 4...20 mA,
2 = 0...10 V

The input is stored by pressing the key.

Note!

The two output signals (current and voltage) are available simultaneously.
This setting is used for selecting the output type, which shall be calibrated.
By selecting 0...20 mA, the voltage signal has a value of 0...10 V.
By selecting 4...20 mA, the voltage signal has a value of 2...10 V.

7.3 Adjusting the parameters for the measurement value alarm

Change to the parameter menu by pressing the key for 5 sec.

The values of the individual parameters are now adjusted with the help of the arrow keys ▼ ▲. By pressing the key, the next parameter is selected.

1. Parameter lower limiting value **L_LI**: selection range -999...9999 (physical unit of the display, pre-selected range 0-100). Select a value within your selection range for the display. This function is switched off by pressing the ▼ key until "----" is displayed.

   Change to the 2nd parameter by pressing .

2. Parameter higher limiting value **L_HI**: selection range 0...9999 (physical unit of the display). Select a value within your selection range for the display. This function is switched off by pressing the ▼ key until "----" is displayed.

   Change to the 3rd parameter by pressing .

3. Parameter alarm hysteresis **HYSI**: selection range 0...9999. The alarm hysteresis determines the delay with which alarm is given.

   Change to the 4th parameter by pressing .

4. Parameter alarm time window **dELI**: selection range 0...9999 sec. The alarm time window sets an alarm delay. If a limiting value is exceeded for a period shorter than the adjusted alarm time window, it will be ignored.

Note!

The parameters for the limiting values can only be adjusted if the measurement value alarm was configured in the configuration menu Con1. The parameter level is left after a time out of 30 sec., and the adjusted values are stored.

7.4 Filter adjustments

Filter time constant

Change to the parameter menu by pressing for 5 sec.

Change to the display **t _F** filter time constant by pressing several times.

Adjust the filter time constant to the time, at which the signal variation is acceptable. Signal variations which exceed the adjusted band width are output directly.

Filter band width

Change from the filter time constant **r _F** to the filter band width **b _F** by pressing the key.

The filter band width calculates a mean value if the signal value varies around a value. If the signal variations are at e.g. 1.5%, the value for **b _F** is to be set at 1.5.

The parameter level is left after a time out of 30 sec., and the adjusted values are stored.

8. Maintenance

Warning!
Danger of shock with opened housing!

Switch off the supply voltage for all maintenance or repair works on the measuring system. The tube must not be in operation during a sensor exchange.

Repair and maintenance work must be carried out by trained or expert personnel only.

The system is maintenance-free.

9. Warranty

Warranty is granted for two years starting from delivery date under the condition that the operational instructions have been followed, no interventions on the appliances have been made and the components of the system show no mechanical damage or wear resistance.

In case of a defect during the warranty period, defective components are repaired or are replaced free of charge. Replaced parts turn into the property of SWR. If desired by the customer that the parts should be repaired or replaced in its factory, then the customer has to take over the costs for the SWR-service staff.

SWR is not responsible for damage, which did not develop at the delivery article; especially SWR is not responsible for escaped profit or other financial damages of the customer.

10. Trouble shooting

Warning!
The electrical installation must only be checked by expert personnel.

Problem	Cause	Measure
Measuring system does not work.	Power supply interrupted.	Check the power supply.
	Break of a cable.	Check the connecting cables for a possible break of a cable.
	Fuse defective.	Exchange the fuse in the field housing (see fig. 9 + 10), 2A, fast.
	Device defective.	**compact version:** Measure the following voltage values on the terminals in the field housing. Terminals 1 + 4: 24 V; if not measured, power supply defective, exchange power supply. Terminals 1 + 3: 8 V; if 24 V between 1 + 4 measured but 8 V between 1 + 3 not measured, pre-amplifier defective, exchange pre-amplifier. Terminals 1 + 2: 2.5 V; 24 V and 8 V measured but 2.5 V between 1 + 2 not measured, sensor defective, exchange sensor. **separated version:** Measure the following voltage values on the terminals directly on the pre-amplifier in the field housing. Terminals 1 + 4: 24 V; if not measured, power supply defective, exchange power supply. Terminals 1 + 3: 8 V; if 24 V between 1 + 4 measured but 8 V between 1 + 3 not measured, pre-amplifier defective, exchange pre-amplifier. Terminals 1 + 2: 2.5 V; 24 V and 8 V measured but 2.5 V between 1 + 2 not measured, sensor defective, exchange sensor.
Measuring system outputs wrong values	Calibration not correct.	Delete input signal correction, press key ▼ for 15 sec, and make a new calibration according to section 6.
	Calibration shifted by abrasion on front end of sensor.	Delete input signal correction, press key ▼ for 15 sec, and make a new calibration according to section 6.
Relay flickering	Hysteresis too small.	Increase hysteresis, check effects caused by external devices.

11. Technical Data

Sensor/Sensor accommodation	
Housing	Steel St52, galvanised (stainless steel 1.4541 option)
Protection category	IP65, DustEX 10 (option)
Operating temperature	front end of sensor: -20....+ 80 °C [-4...176 °F] optional: -20...+200 °C [-4...392 °F] sensor electronic: 0....+ 60 °C [32...140 °F]
max. working pressure	1 bar, optional 10 bar
Working frequency	K-Band 24.125 GHz, ±100 MHz
Transmitting power	Max. 4 mW
Weight	Approx. 1.3 kg
Dimension	∅ 60, Ø 20, L 290mm
Accuracy	+/- 2..5% in calibrated range
Pre-Amplifier	
Protection category	IP65
Operating temperature	–20...+60 °C [-4...+140 °F]
Enclosure dimensions	200 x 200 x 120 mm (W x H x D)
Weight	approx. 3.6 kg
Evaluation-Unit	
Supply voltage	90...260 V AC, 47...440 Hz (with enclosed power supply, regular) or 24 V DC, -5/+15% (option)
Power consumption	24 W, 24 VA
Current consumption	Max. 1 A @ 24 V
Protection category	IP65 to EN 60 529/10.91
Operating temperature	–10...+45 °C [14...113 °F]
Enclosure dimensions	300 x 400 x 155 mm (W x H x D)
Weight	approx. 8.5 kg
Additional data:	
Cable glands	3 x M16 (4.5 – 10 mm Ø)
Screw terminals	0.2 – 2.5 mm² [AWG 24-14]
Current output signal	4...20 mA (0...20mA), Load < 700 Ω
Voltage output signal	2…10 V (0…10V), Load > 2 kΩ
measurement value alarm relay output	Relay with switching contact Max. 250V AC, 1A
Data storage	EEPROM