Operating Instructions

SOLIDFLOW

SWR engineering
Messtechnik GmbH
Mittlerer Weg 22
D - 79424 Auggen
Germany
Tel +49 7631 10501
Fax +49 7631 10502
eMail info@swr-engineering.com

BA-0003-e-03/02

1. SYSTEM OVERVIEW 4

2. FUNCTION 5

3. SAFETY 6

3.1 Regular use 6

3.2 Identification of dangers 6

3.3 Operational safety 6

3.4 Technical progress 6

4. MOUNTING AND INSTALLATION 7

4.1 Delivery range 7

4.2 Auxiliary 7

4.3 Mounting of the sensor 7

4.4 Mounting of the transmitter unit 10

5. ELECTRICAL CONNECTION 11

5.1 Connection of the separated version 11

5.2 Flow diagram of the separated version 12

5.3 Connection compact version 13

5.4 Flow diagram of the compact version 14

6. COMMISSIONING 15

7. OPERATION 17

7.1 Operating elements 17

7.2 Adjusting the output signal 17

7.3 Adjusting the parameters for the measurement value alarm 18

7.4 Filter adjustments 18

8. MAINTENANCE 19

9. WARRANTY 19

10. TROUBLE SHOOTING 20

11. TECHNICAL DATA **21**

1. System overview

Overview of the measuring system separated version

← Max. 1.5 m → ← up to 1000 m →

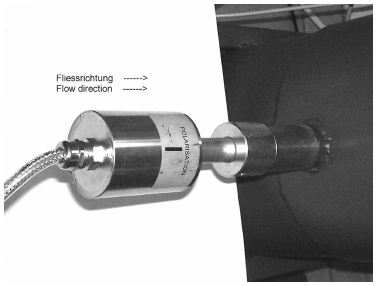

+

+

sensor pre-amplifier evaluation unit

Overview of the measuring system compact version

← Max. 1.5 m →

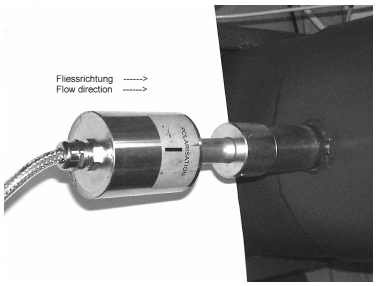

+

sensor evaluation unit

2. Function

SolidFlow is a measuring system especially developed for measuring the flow rate of pneumatically conveyed solids in metallic ducts.

The microwave energy is being back scattered by the solid particles and received by the sensor. These signals are evaluated in frequency and amplitude. Because of the selective frequency evaluation only moving particles are measured.

The measuring signal is independent of pressure and temperature in the duct. A measuring unit consists of one or two sensors, a pre-amplifier and the evaluation unit.

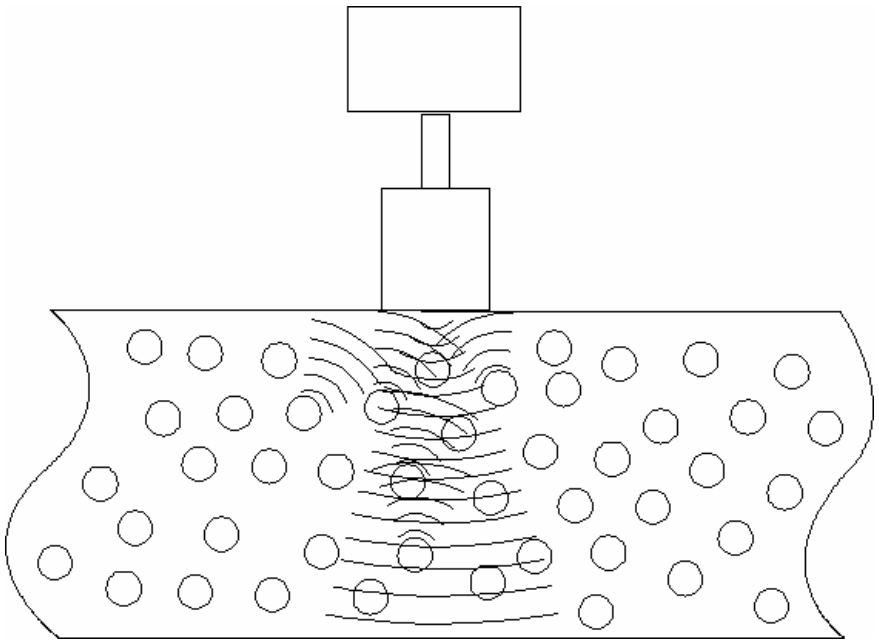

Fig. 3: Coupling and reflection of the microwaves.

3. Safety

The measuring system SolidFlow was designed, built and tested to be safe and was shipped in safe condition. Nevertheless persons or objects may be endangered by components of the system if these are operated in an inexpert manner. Therefore the operational instructions must be read completely and the safety notes must be followed.

In case of inexpert or irregular use, the manufacturer will refuse any liability or guarantee.

3.1 Regular use

The measuring system must be installed for measuring the flow rate in metallic ducts only. Other usages and modifications of the measuring system are not permitted.

Only original spare parts and accessories of SWR engineering must be used.

3.2 Identification of dangers

Possible dangers when using the measuring system are marked by the following symbols in the operating instructions:

Warning!

This symbol in the operating instructions marks actions, which may represent a danger for life and limb of persons when carried out in an inexpert manner.

Attention!

All actions which may endanger objects are marked with this symbol in the operating instructions.

3.3 Operational safety

The measuring system must be installed by trained and authorised personnel only.

Switch off the supply voltage for all maintenance, cleaning or inspection works on the tubes or on components of the SolidFlow. Follow the notes of the chapter maintenance.

The components and electrical connections must be checked for damages regularly. If damage is found, it is to be repaired before further operation of the instruments.

3.4 Technical progress

The manufacturer reserves the right to adapt technical data to the technical progress without particular advance notice. If you have any questions, SWR engineering will be pleased to inform you on possible changes and extensions of the operating instructions.

3.5 Statements to Users

This device complies with Part 15 of the FCC Rules. Operation is subject to the following two conditions: (1) this device may not cause harmful interference, and (2) this device must accept any interference received, including interference that may cause undesired operation.

Changes or modifications not expressly approved by the manufacturer could void the user’s authority to operate the equipment.

4. Mounting and installation

4.1 Delivery range

- Evaluation unit, version as ordered.
- Weld on sensor accommodation.
- Hook wrench for the union nut.
- Sensor, prepared to the wall thickness (union nut, distance washers, seal-ring).
- Operating instructions.

4.2 Auxiliary

- Drill Ø 20 mm for steel.
- Pliers for circlips (Ø 20 mm) for adjusting the wall thickness at the sensor.

4.3 Mounting of the sensor

The sensor is to be mounted as follows:

- Determine the place of mounting on the duct. On horizontal or inclined ducts the sensor should be mounted from top.
- In case of duct diameters greater than Ø 150 mm (6”) or a special application one has to install 2 sensors which are located 300 mm (12”) apart from each other and moved by 90° towards each other.
- Follow the necessary distances of valves, bows, fans or cellular wheel sluices etc. and also other measurement devices like temperature and pressure etc. to the sensor (see fig. 4).

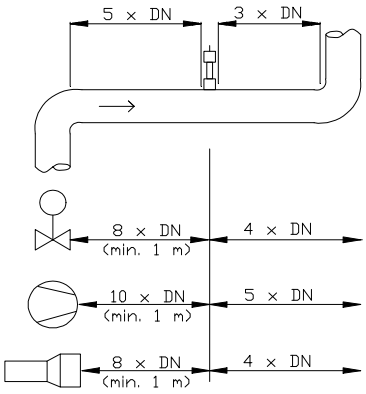

Fig. 4: Minimal distances of the sensor to duct bends and baffles.

- Weld the sensor accommodation on to the duct.
- Drill the Ø 20 mm hole into the duct. Please use your own drill as there are different shafts available. Take care that the hole is in line and rectangular to the surface to avoid trouble by inserting the sensor.
- If the sensor is not installed immediately, the dummy plug must be put in until the sensor will be installed (see fig. 5). Use the delivered hook wrench for tightening the union nut.

Fig. 5: Installation of the sensor accommodation and the dummy plug.

1 union nut
2 circlip for shafts
3 distance washer 1 mm
4 O-ring-type sealing ring
5 not applicable
6 sensor accommodation
7 dummy plug
8 headless screw 3 mm (only by St52 steel design)

- Remove the dummy plug for installing the sensor.
- The sensor will be delivered prepared to the required wall thickness if known and ordered otherwise the sensor comes prepared for 5 mm wall thickness. We strongly recommend that the correct adjusting is checked again, see table, if necessary the wall thickness must checked with a depth gauge. It is important that the sensor does not intrude into the duct because the front end of the sensor will be worn by abrasion otherwise. The sensor may be submerged into the duct wall by up to 1 mm without creating an error of measurement.

Wall thickness [mm]	Circlip for shafts position (Fig.6a Pos.2)	Number of distance washers (Fig.6a Pos.3)
4.0	1	-
5.0	3	4
6.0	3	3
7.0	3	2
8.0	3	1
9.0	3	-
10.0	5	3
11.0	5	2
12.0	5	1

- Now the sensor is put into the sensor accommodation and screwed with the union nut according to figure 6a.

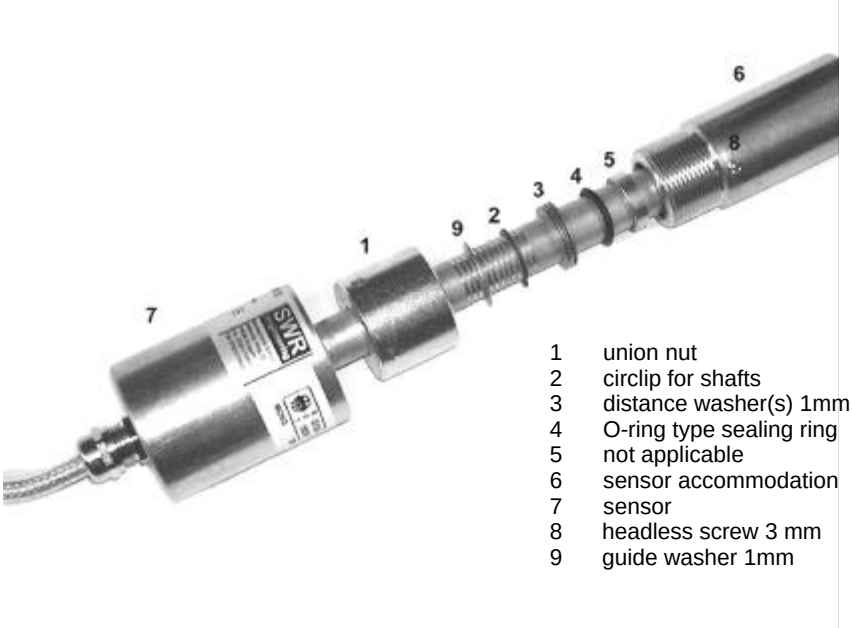

Fig. 6a: Installation of sensor accommodation and sensor.

- Look at the POLARISATION – label to adjust the sensor along to the duct, fig. 6b. Lock the sensor with the union nut dust proof and fix the sensor with the headless screw against turning around.

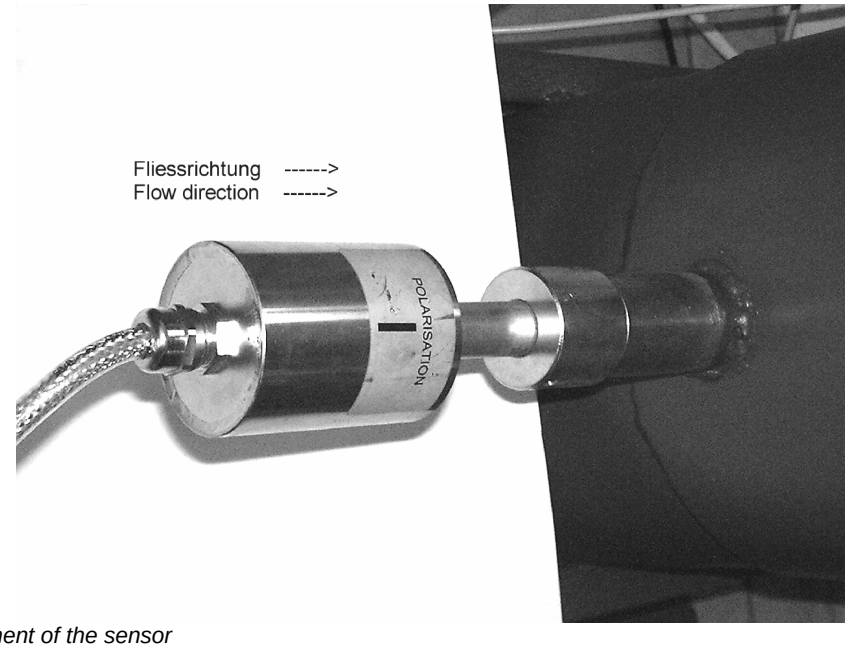

Fig. 6b: Adjustment of the sensor

4.4 Mounting of the transmitter unit

The transmitter unit is available in two versions:

As compact version:

All the electronic equipment (power supply, pre-amplifier and evaluation unit in one field housing) can be installed at a maximum distance of 1.5 m from the sensor. The housing is prepared for wall mounting. For mounting dimensions see technical data.

Fig. 7: Field housing

As separated version:

The pre-amplifier is installed at a distance of 1.5 m from the sensor, power unit and evaluation unit can be installed in a measuring station or in a control box at a maximum distance of 1,000 m (Cable specification: 4 wires used, min. 0.5 mm² wire cross section, single shielded, recommended cable type LiYCY 8*0.5 mm^2; RD-Y(St)Y 4*2*0.5 mm^2 or equal quality).

The pre-amplifier can be put on a standard rail (EN 5002) or is delivered in a housing prepared for wall mounting. The mounting dimensions are shown in fig. 8. For mounting dimensions see technical data, for the housing of the evaluation unit see fig. 7.

Fig. 8: Pre-amplifier housing