DRAFT

Owner's Manual

ESCORT iXc

Long Range Protection + Bluetooth® and Wi-Fi Connectivity

BACKGROUND FOR POSITION ONLY. COVER WILL FOLLOW NEW PACKAGE DESIGN.

FOR POSITION ONLY

iXc | Intelligent Connected Long Range Radar Laser Detector

- Excellent Radar/Laser Detection Range
- GPS Intelligence Rejects False Alerts
- ESCORT Live App Provides Crowd Sourced Alerts
- Connected Car's Wi-Fi Provides Crowd Sourced Alerts & Software Updates

Congratulations

DRAFT

ESCORT iXcc

You've just purchased the ESCORT iXc with long-range radar-laser performance, GPS-based intelligence plus Bluetooth® and Wi-Fi connectivity.

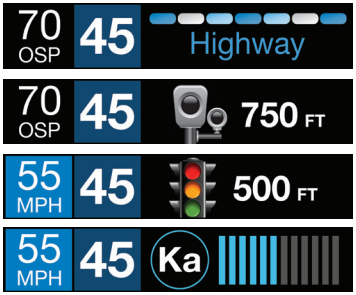

ESCORT iXc features a new multi-color OLED display. Brilliant graphics illuminate intuitive icons that identify the type of threat at a glance.

ESCORT iXc Features

- The ESCORT iXc delivers long-range warning on all radar bands including X, K, Superwide Ka.
- ESCORT iXc's GPS location-based intelligence automatically locks out false alerts and allows you to mark locations for future reference.
- ESCORT iXc gives you access to ESCORT's DEFENDER Database, which warns you of verified speed traps, speed cameras, and red light cameras.

DEFENDER by ESCORT

- ESCORT iXc, with built in Bluetooth® and Wi-Fi technology, gives you access to ESCORT's award winning app, ESCORT Live. Our exclusive real-time ticket-protection, the network which warns you of upcoming alerts received and reported by other users in the area, and gives you access to local speed limit data for over-speed alerts.

Live Ready!

Registration and ESCORT Live

DRAFT

Before downloading ESCORT Live, you must first register your ESCORT iXc device. Be sure to have your ESCORT iXc unit nearby, as you will need the serial number.

1 Visit www.EscortRadar.com and click Product Registration.

2 Click the "Registration for all devices" link.

3 Follow the onscreen instructions to register your device.

Be sure to write down the username and password you create, as you will need this information to access and download ESCORT Live. (You will also receive an e-mail with this information, once you have registered your device.)

For iPhone:

1 Ensure ESCORT iXc power is ON

2 Open the App Store on your iPhone and search for **ESCORT Live Radar**.

3 Follow the onscreen instructions to download **ESCORT Live Radar** and then open the app.

4 When prompted, enter the username and password you created when registering your product at EscortRadar.com.

5 Press the Settings button then select **Devices**.

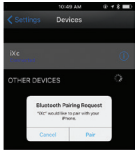

6 You should see **iXc** listed with Not Connected underneath. Press the **iXc** device entry and when prompted select Pair.

7 The Bluetooth icon on the ESCORT iXc display will appear to confirm that it is paired to your iPhone.

For Android based smartphones:

1 Ensure ESCORT iXc power is ON.

2 On your smartphone go to Bluetooth® Settings and make sure that Bluetooth® is ON.

3 Press Scan for devices and wait for the device list to populate, **iXc** Live should appear under Available devices.

4 Press the **iXc** device entry.

5 The Bluetooth icon on the ESCORT iXc display will appear to confirm that it is paired to your smartphone.

6 Open Google Play on your smartphone and search for **Escort Live Radar**.

7 Follow the onscreen instructions to download **Escort Live Radar** and then open the app.

8 When prompted, enter the username and password you created when registering your product at EscortRadar.com.

7 Open the app, walk through the tutorial, and you're ready to hit the road!

Installation DRAFT

Your new detector comes with our latest **EZ Mag Mount**™. Simply tilt the display end of the detector up and slide it onto the mounting bracket. The magnetic mount holds the detector in place. To remove the detector from the mount, simply lift the display end of the detector and the detector releases from the mount.

Mounting Tips:

- Center of windshield between driver and passenger.
- Ensure clear view of road ahead and sky above.
- Avoid windshield wipers and heavily tinted areas.

To mount the detector in your vehicle:

1. Remove paper backing from EZ Mag Mount™ StickyCup.
2. Ensure the locking clamp is open.
3. Firmly press EZ Mag Mount™ StickyCup onto windshield and close the locking clamp to secure.
4. To adjust view, loosen thumb wheel and adjust angle of mounting bracket. Tighten thumb wheel to secure.
5. Tilt the display end of the detector slightly upward and engage with the flanged edge of the mounting bracket. The EZ Mag Mount™ magnet holds the detector in place.
6. To remove the detector, simply lift the display end of the detector upward. The ESCORT iXc will release from the mount.
7. To remove mount from windshield, release locking clamp and pull tab on top of StickyCup.

EZ Mag Mount™ Care Instructions:
Should the EZ Mag Mount™ StickyCup accumulate debris and lose its stickiness, simply rinse under warm water, gently wipe off debris and allow to air dry.

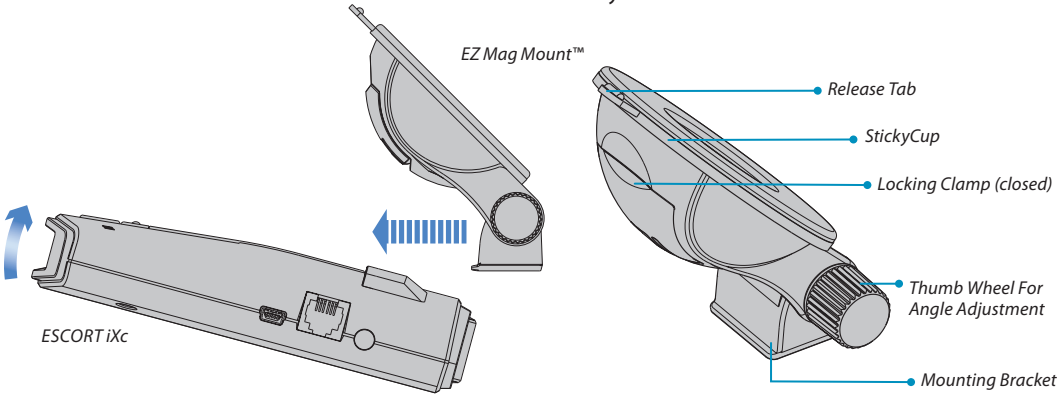

DRAFT

Using ESCORT iXc

1 Plug small end of SmartCord USB into modular jack on ESCORT iXc and large end of SmartCord USB into your car's lighter/accessory socket.

2 ESCORT iXc should power on automatically. If not, press the device's power button.

Using Wi-Fi Connect

To connect ESCORT iXc to your connected vehicle's Wi-Fi network:

1 Follow the directions on page 3 to register your ESCORT iXc, download the ESCORT Live app and bluetooth pair ESCORT iXc to your smartphone.

2 Connect your smartphone to your connected vehicle's Wi-Fi network.

3 In the ESCORT Live app, enter Settings, select **Wi-Fi Settings** then **Connect to Wi-Fi Network**.

4 Enter your connected vehicle's Wi-Fi network password.

5 After successfully connecting, the speed limit indicator will change to white indicating that is receiving data from Wi-Fi (see page 6).

Earphone Jack

Connects to optional 3.5 mm stereo earphone

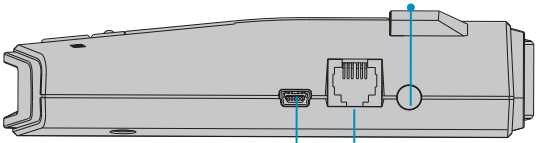

Mini USB Jack
Connects to your computer via USB A / Mini B cable for downloading software updates

Modular Jack
Connects to SmartCord USB for powering your device

Using SmartCord USB

- **Mute Button**:
  - Press to mute the audio for a specific alert.
  - Press three times to lock out a false alert.
  - Press twice while receiving a locked-out alert to unlock.
  - When connected to ESCORT Live press and hold mute button on unit or cord to manually report to other users a verified X or K-band alert, or a police officer observing traffic.
- **Alert Light**: Blinks red when receiving a radar or laser alert.
- **Power Light**: Lights green when receiving power.
- **USB Charging Port**: Charge smartphones, tablets and other USB-charged Devices.

Modular Connector
Plugs into detector jack

SmartCord USB Adapter
Connects to lighter/accessory socket

DRAFT

Mount Area
The EZ Mag Mount™ attaches to device here

Power ⏻
Press to turn ESCORT iXc on or off

Volume
Press and hold **+** or **–** to adjust volume

Brightness (BRT)
Press to adjust display brightness (Min, Med, Max, Auto, Dark)

Sensitivity (SEN)
Press to adjust detector sensitivity (Auto, Auto NoX, AutoLoK, and Highway)

Mark Location (MRK)
To mark a location for future alerts, press MRK twice, then VOL **+** or **–** to select the type of marker, then MRK again to confirm. Press twice while receiving marker alert to unmark

Mute
Press to mute an alert; press three times to lock out a false alert; press twice while receiving a locked-out alert to unlock

Display
Alert area

Display
Current speed

Display (OSP)
OverSpeed alert setting, can be adjusted in Preferences. Bluetooth icon will appear here when paired to phone. Speed limit data will appear here when receiving ESCORT Live data from smartphone's bluetooth or from vehicle's Wi-Fi.

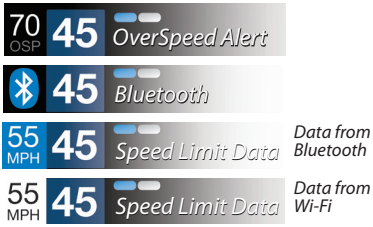

Continued ➜

Settings & Preferences

DRAFT

Press and hold the MRK and SEN buttons to access Preferences. To exit Preferences, simply wait a few seconds without pressing a button. The unit will display **Completed** to confirm your selections.

Press MRK to go from one category to the next		**Press VOLUME + or – to change your setting within a category**
User Mode	**Advanced*** **Novice**	Access and customize all Settings and Preferences Access and customize units and display color, (all other Settings are set to factory defaults) *NOTE: Switch back to advanced mode to view all Preferences.*
Pilot	**Scan Bar*** **Full Word**	Scanning Bar with Full Word. Full Word: Auto, Auto NoX, AutoLoK or Highway
Display Color	**Blue*/Green/Red/Amber**	Set color to match your vehicle's dash display
Speed Display	**On*** **Off**	Displays current speed Displays battery voltage
Cruise Alert	**20 mph*** **Off / 20-160 mph**	Offers double beep alert tones below specified speed
Over Speed	**70 mph*** **Off / 20-160 mph**	Reminds you when you exceed a specified speed
Meter Mode	**Standard*** **Spec** **Expert** **Simple**	Single band with signal strength bar graph Single band with numeric frequency Multiple bands with signal strength bar graphs Simple messages replace bands: **Caution** (if traveling below cruise alert limit) **Slow Down** (if traveling above cruise alert limit)
Tones	**Standard*** **Mild**	Standard ESCORT alert tones Mild doorbell chime alert tones
AutoMute	**AutoMute Low / Med* / High / Off**	Automatically reduces audio to preferred volume during alert
AutoLearn	**On* / Off**	Automatically stores and locks out false alarms
Units	**English* / Metric**	Units for distance and speed
Language	**English* / Espanol**	Language for voice and text
Voice	**On* / Off**	Voice announcements
GPS Filter	**On* / Off**	Enables GPS-powered features

DRAFT

AutoPower	**Off**	Power turns on or off depending on your vehicle's ignition type (constant power or switched)
	1 Hour	Powers off automatically after 1 hour
	2 Hours	Powers off automatically after 2 hours
	4 Hours*	Powers off automatically after 4 hours
	8 Hours	Powers off automatically after 8 hours

NOTE: AutoPower only works with constant power ignition.

NOTE: If AutoPower is on, to save screen life the display screen goes blank after 30 minutes without moving. Display screen will turn on automatically after you reach 10MPH.

Band Enables	**Default***	Default Settings
	Modified	Band Enables have been modified from their default settings

Press SEN to go from one band category to the next — **Press VOLUME + or – to change your setting within a category**

X Band	**On* / Off**	
K Band	**On* / Off**	Freq: 24.050 – 24.250 GHz
		NOTE: When K Band is off, you can select separate segments of the band to turn on or off.
Ka Band	**On* / Off**	Freq: 33.400-36.000 Ghz
		NOTE: When Ka Band is off, you can select separate segments of the band to turn on and off.
KN1	**On* / Off**	Freq: 24.050 - 24.110 GHz
KN2	**On* / Off**	Freq: 24.110 - 24.175 GHz
KN3	**On* / Off**	Freq: 24.175 - 24.250 GHz
KN4	**On / Off***	Freq: 23.950 - 24.050 GHz

KaN1	**On / Off***	Freq: 33.400 - 33.700 GHz	KaN6	**On / Off***	Freq: 34.800 - 35.160 GHz
KaN2	**On / Off***	Freq: 33.700 - 33.900 GHz	KaN7	**On* / Off**	Freq: 35.160 - 35.400 GHz
KaN3	**On* / Off**	Freq: 33.900 - 34.200 GHz	KaN8	**On* / Off**	Freq: 35.400 - 35.600 GHz
KaN4	**On* / Off**	Freq: 34.200 - 34.600 GHz	KaN9	**On / Off***	Freq: 35.600 - 35.840 GHz
KaN5	**On* / Off**	Freq: 34.600 - 34.800 GHz	KaN10	**On / Off***	Freq: 35.840 - 36.000 GHz

Ka-POP	**On / Off***	
Laser	**On* / Off**	
TSR	**On* / Off**	Automatically rejects traffic flow sensors-monitoring false alarms
RDR	**On* / Off**	Radar Detector Rejection

Marker Enables	**Default***	Default Settings
	Modified	Marker Enables have been modified from their default settings

DRAFT

Press SEN to go from one marker category to the next		Press VOLUME + or – to change your setting within a category
Other	**On* /Off**	Other location
Redlight	**On* / Off**	Red light camera
Red & Speed	**On* / Off**	Red light & speed camera
Speed Cam	**On* / Off**	Speed camera
Speed Trp	**On* / Off**	Speed trap
Air Patrol	**On / Off***	Known aircraft patroled areas *NOTE: User cannot mark an air patrol location.*
Clear Locations	**Marked**	Clear all user Marked locations. Press SEN button to confirm
	Lockouts	Clear all lockouts. Press SEN button to confirm
	Defender	Clear all DEFENDER data. Press SEN button to confirm
	Format	Clear DEFENDER database, all markers, and all lockouts Press SEN button to confirm

***Default Setting**

Notes for Settings & Preferences

To view serial number and software revision press MRK and MUTE while powering on detector.
To restore ESCORT iXc to its original factory Settings, press and hold SEN and BRT while turning the power on. A "Restored" message will display, acknowledging the reset.

Software Updates

In its factory default settings ESCORT iXc automatically receives software updates from your connected vehicle's Wi-Fi network. See Using Wi-Fi Connect on page 5 for connection instructions.

The ESCORT iXc operating firmware and red light and speed camera database can also be updated using a USB A/Mini B cable (not included) connected to a computer using our detector software tools found on our web site. In order to have access to these updates, please register your ESCORT iXc at www.EscortRadar.com

Warranty DRAFT

ESCORT One Year Limited Warranty

What this warranty covers: Escort, Inc. ("Escort") warrants your Product against all defects in materials and workmanship.

For how long: One (1) year from the date of original purchase from an authorized Escort dealer.

What we will do: If a breach of warranty occurs, Escort, at its discretion, will either repair or replace your Product free of charge.

What we will not do: Escort will not pay shipping charges that you incur for sending your Product to us.

What you must do to maintain this warranty: Show original proof of purchase or receipt from an authorized Escort dealer.

Warranty exclusions: This warranty does not apply to your product under any of the following conditions: 1.The serial number has been removed or modified. 2. Your product has been subjected to misuse or damage (including water damage, physical abuse, and/or improper installation). 3. Your product has been modified in any way. 4. Your receipt or proof-of-purchase is from a nonauthorized dealer or internet auction site, including E-bay, U-bid, or other non-authorized resellers. 5. You are not the original purchaser of the Product from an authorized dealer or did not receive it as a gift from the original purchaser of the Product from an authorized dealer.

To obtain service: 1. Contact ESCORT (1-800-543-1608) to obtain a Return Authorization Number. 2. Properly pack your Product and include: your name, complete return address, written description of the problem with your Product, daytime telephone number, and a copy of the original proof of purchase or receipt. 3. Label the outside of the package clearly with your Return Authorization Number. Ship the Product pre-paid (insured, for your protection) to: ESCORT, Inc., 5440 West Chester Rd., West Chester, OH 45069.

LIMITATION OF WARRANTY: The obligations set forth above are ESCORT's sole obligations and your exclusive remedy. **ESCORT makes no other express warranty**. **Any implied warranty of merchantability or fitness for a particular purpose that may be applicable to the Product is limited in duration to the duration of this warranty**. Some States do not allow limitations on how long an implied warranty lasts, so the above limitation may not apply to you. ESCORT SHALL NOT BE LIABLE FOR CONSEQUENTIAL, SPECIAL OR INCIDENTAL DAMAGES INCLUDING, WITHOUT LIMITATION, DAMAGES ARISING OUT OF THE USE, MISUSE OR MOUNTING OF THE PRODUCT.

Some States do not allow the exclusion or limitation of incidental or consequential damages, so the above limitation or exclusion may not apply to you. ESCORT is not responsible for products lost in shipment between the owner and our service center.

Other legal rights: This warranty gives you specific legal rights, and you may also have other rights which vary from State to State.

©2018 ESCORT Inc. ESCORT® is a registered trademark of ESCORT Inc.

Contact Us

Accessories

800.433.3487

EscortRadar.com

Designed in the USA by Escort, Inc.
Manufactured in the Philippines

ESCORT Inc.
5440 West Chester Road
West Chester OH 45069

Sales / Service 800.433.3487
www.EscortRadar.com

©2018 ESCORT Inc. ESCORT®, ESCORT iXc®, Defender®, AutoLearn®, TrueLock™, AutoSensitivity™, SpecDisplay™, ExpertMeter™, ESCORT Live™, IVT Filter™, SmartMute™ and EZ Mag Mount™ are trademarks of ESCORT, Inc.

FCC NOTE: Modifications not expressly approved by the manufacturer could void the user's FCC granted authority to operate the equipment.

FCC ID:QKLIXC.CONTAINS FCC ID:TFB-1003
This device complies with part 15 of the FCC rules. Operation is subject to the following two conditions: (1) This device may not cause harmful interference, and (2) This device must accept any interference received including interference that may cause undesired operation.

ESCORT Live Compatible

Download on the App Store

ANDROID APP ON Google play

The Bluetooth® word mark and logos are registered trademarks owned by Bluetooth SIG, Inc. and any use of such marks by ESCORT is under license.