Install the mounting bracket and hang up the inverter

Selecting the fixing material

Use the corresponding fixing materials depending on the subsurface and observe the screw dimension recommendations for the mounting bracket.
The installer is responsible for selecting the correct type of fixing.

Properties of the mounting bracket

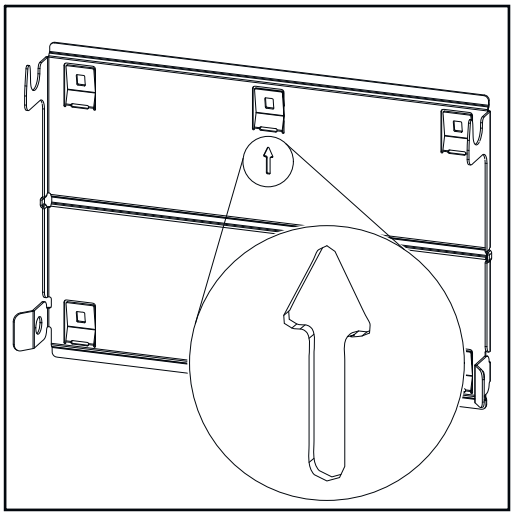

The mounting bracket (illustration) can also be used as a guide.

The pre-drilled holes on the mounting bracket are intended for screws with a thread diameter of 6-8 mm (0.24-0.32 inches). The distance from the left to the right pre-drilled hole is 406 mm (16 inches).

Unevenness on the mounting surface (such as coarse-textured plaster) is largely compensated by the mounting bracket.

Do not deform the mounting bracket

NOTE!

When fitting the mounting bracket to the wall or column, ensure that the mounting bracket does not become deformed.
A deformed mounting bracket may make it difficult to clip/swivel the inverter into position.

Fitting the mounting bracket to a wall

IMPORTANT!
When installing the mounting bracket, make sure that it is installed with the arrow pointing upwards.

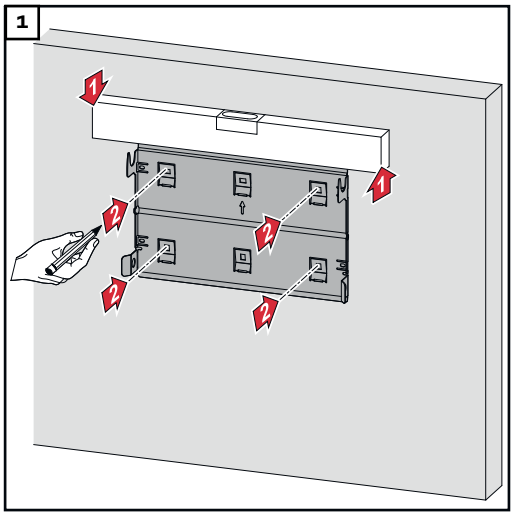

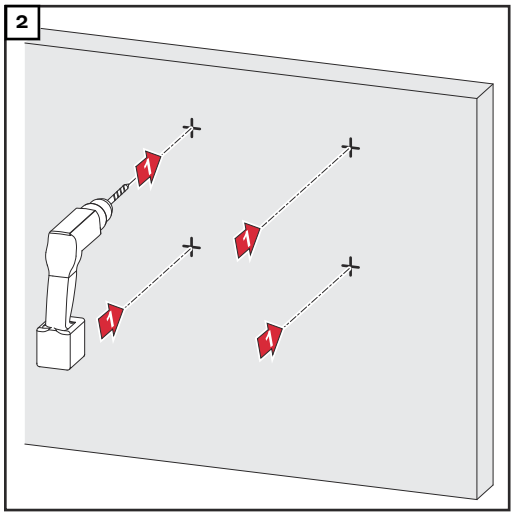

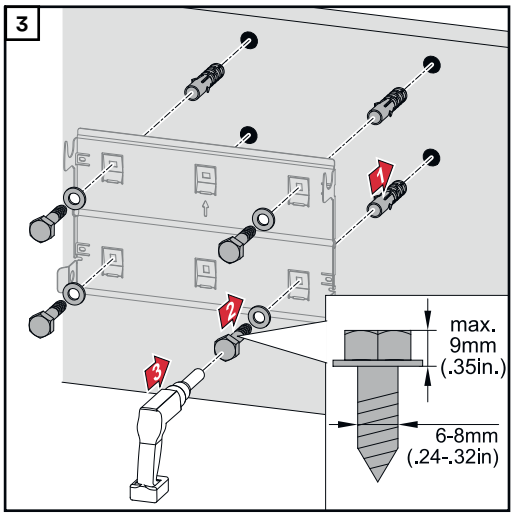

Installing the mounting bracket on a mast or beam

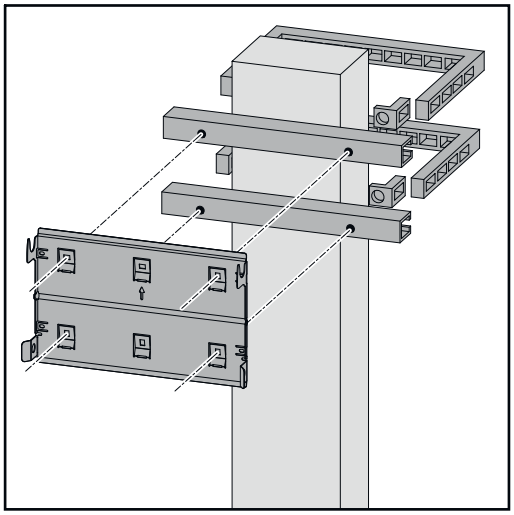

When installing the inverter on a mast or beam, Fronius recommends using the "Pole clamp" (order no. SZ 2584.000) mounting kit from Rittal GmbH.

The "Pole clamp" kit covers the following dimensions:

- Rectangular mast or beam with a side length of 50-150 mm (1.97-5.91 inches)
- Round mast or beam with a diameter of 40-190 mm (1.57-7.48 inches)

Attaching the mounting bracket to mounting rails

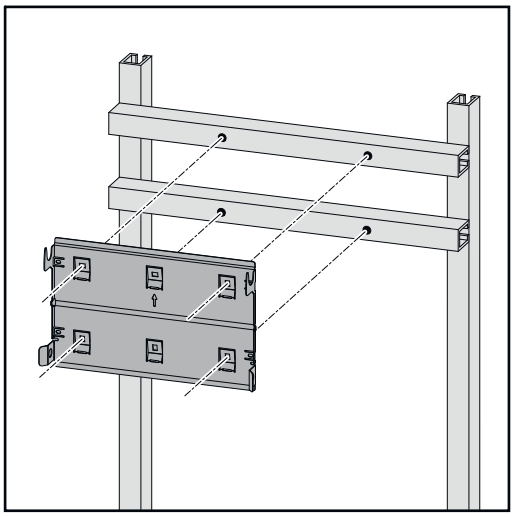

IMPORTANT!
The mounting bracket must be affixed at a minimum of four points.

Attaching the inverter to the mounting bracket

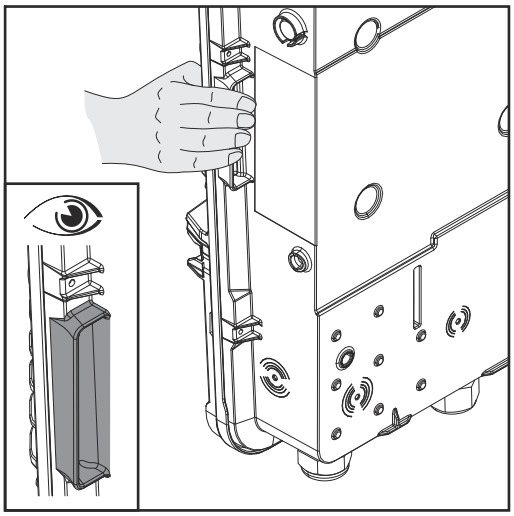

There are integrated grips on the side of the inverter which facilitate lifting/attaching.

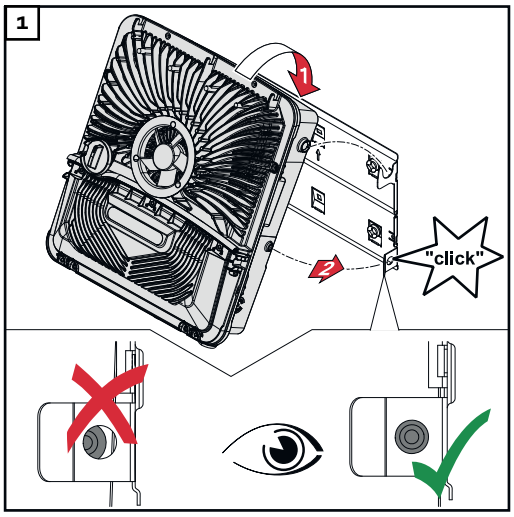

Clip the inverter into the mounting bracket from above. The connections must point downwards.

Push the lower part of the inverter into the snap-in tabs until the inverter audibly clicks into place on both sides.

Check that the inverter is correctly positioned on both sides.

Prerequisites for connecting the inverter

Different cable types

Solid	Multi-stranded	Fine-stranded	Fine-stranded with ferrule and collar	Fine-stranded with ferrule without collar
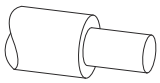	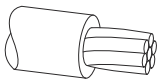	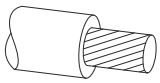	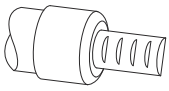	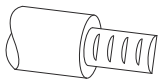

Permissible cables for the electrical con-

Round copper conductors can be connected to the terminals of the inverter as described below.

Grid connections with push-in terminal* Select a sufficiently large cable cross section based on the actual device output.					
Number of pins	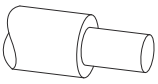	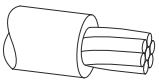	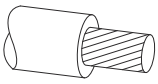	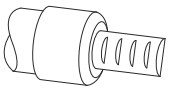	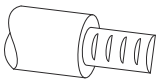
3	2.5 – 10 mm^2 AWG 14–8	2.5 – 10 mm^2 AWG 14–8	2.5 – 10 mm^2 AWG 14–8	2.5 – 6 mm^2 AWG 14–10	2.5 – 6 mm^2 AWG 14–10

Grid connections, backup power with push-in terminal* Select a sufficiently large cable cross section based on the actual device output!					
Number of pins	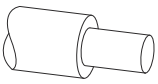	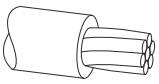	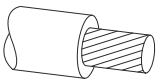	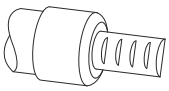	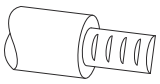
3	1.5 – 10 mm^2 AWG 16–8	1.5 – 10 mm^2 AWG 16–8	1.5 – 10 mm^2 AWG 16–8	1.5 – 6 mm^2 AWG 16–10	1.5 – 6 mm^2 AWG 16–10

PV/BAT connections with push-in terminal** Select a sufficiently large cable cross section based on the actual device output.					
Number of pins	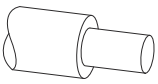	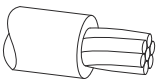	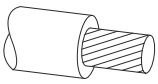	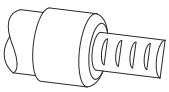	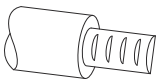
2 x 5	4 – 10 mm^2 AWG 12–8	4 – 10 mm^2 AWG 12–8	4 – 10 mm^2 AWG 12–8	4 – 6 mm^2 AWG 12–10	4 – 6 mm^2 AWG 12–10

Ground electrode terminal (6-pin) Select a sufficiently large cable cross section based on the actual device output.					
Number of pins	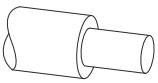	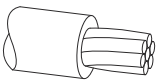	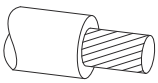	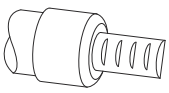	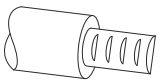

Ground electrode terminal (6-pin) Select a sufficiently large cable cross section based on the actual device output.					
2	2.5 – 16 mm² AWG 14–6	2.5 – 16 mm² AWG 14–6	2.5 – 16 mm² AWG 14–6	2.5 – 16 mm² AWG 14–6	2.5 – 16 mm² AWG 14–6
4	2.5 – 10 mm² AWG 14–8	2.5 – 10 mm² AWG 14–8	2.5 – 10 mm² AWG 14–8	2.5 – 10 mm² AWG 14–8	2.5 – 10 mm² AWG 14–8

* According to product standard IEC 62109, the ground conductor must correspond to the phase cross-section for phase cross-sections ≤16 mm², while for phase cross-sections >16 mm², it must be at least 16 mm².

For a conductor cross-section of 1.5 mm², the maximum permissible cable length is 100 m.

** The cable cross-section must be dimensioned in accordance with the installation situation and the specifications of the battery manufacturer.

Permissible cables for the data communication connection

Cables with the following design can be connected to the terminals of the inverter:

- Copper: round, solid
- Copper: round, fine-stranded

IMPORTANT!
Connect the individual conductors to an appropriate ferrule if several individual conductors are connected to one input of the push-in terminals.

WSD connections with push-in terminal						
Distance max.	**Stripping length**	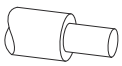	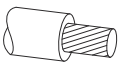	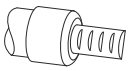	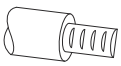	**Cable recommendation**
100 m 109 yd	10 mm 0.39 inch	0.14-1.5 mm² AWG 26 - 16	0.14-1.5 mm² AWG 26 - 16	0.14-1 mm² AWG 26 - 18	0.14-1.5 mm² AWG 26 - 16	min. CAT 5 UTP (unshielded twisted pair)

Modbus connections with push-in terminal						
Distance max.	**Stripping length**	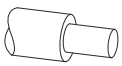	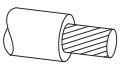	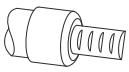	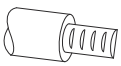	**Cable recommendation**
300 m 328 yd	10 mm 0.39 inch	0.14-1.5 mm² AWG 26 - 16	0.14-1.5 mm² AWG 26 - 16	0.14-1 mm² AWG 26 - 18	0.14-1.5 mm² AWG 26 - 16	min. CAT 5 STP (shielded twisted pair)

IO connections with push-in terminal						
Distance max.	**Stripping length**	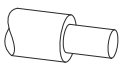	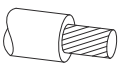	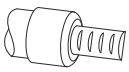	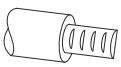	**Cable recommendation**
30 m 32 yd	10 mm 0.39 inch	0.14-1.5 mm² AWG 26 - 16	0.14-1.5 mm² AWG 26 - 16	0.14-1 mm² AWG 26 - 18	0.14-1.5 mm² AWG 26 - 16	Single conductor possible

LAN connections
Fronius recommends at least CAT 5 STP (shielded twisted pair) cables and a maximum distance of 100 m (109 yd).

Cable diameter of the AC cable

For a standard M32 cable gland **with a reducer:**
7-15 mm

For a standard M32 cable gland **without a reducer**:
11-21 mm
(with a cable diameter of less than 11 mm, the strain-relief force is reduced from 100 N to a maximum of 80 N)

With cable diameters greater than 21 mm, the M32 cable gland must be replaced by an M32 cable gland with a larger clamping area – item number: 42,0407,0780 – strain-relief device M32 x 1.5 KB 18-25.

Cable diameter of the DC cable

Cable diameter for the strain-relief device: max. 9 mm.
Cable diameter for the connection to the push-in terminal: max. 7 mm

IMPORTANT!
For double-insulated cables with a cable diameter over 7 mm, the outer layer of insulation must be removed to connect to the push-in terminal.

Maximum alternating current fuse protection

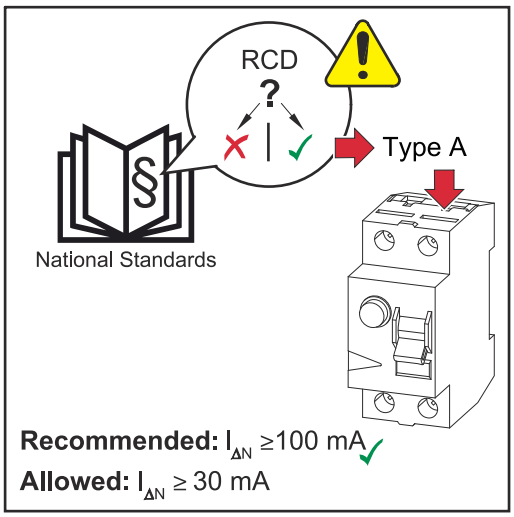

NOTE!

The national regulations of the grid operator or other factors may require a residual current circuit breaker in the AC connection lead.
For this situation, a type A residual current circuit breaker is generally adequate. Nevertheless, false alarms can be triggered for the type A residual-current circuit breaker in individual cases and depending on local conditions. For this reason, in accordance with national legislation, Fronius recommends that a residual-current circuit breaker with a tripping current of at least 100 mA suitable for frequency converters be used.

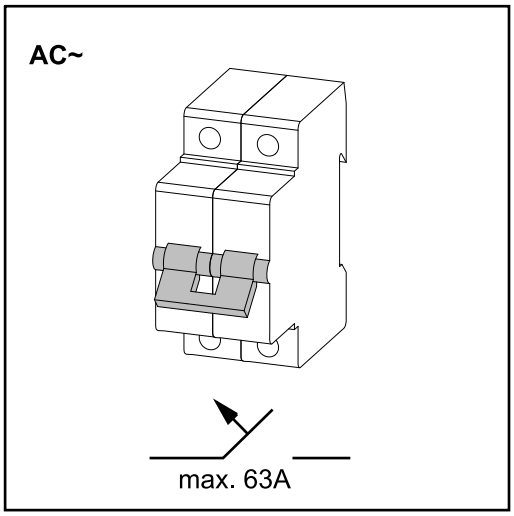

IMPORTANT!
The inverter can be fused with max. an automatic circuit breaker 63 A.

Inverter	Phases	AC output	Maximum fuse rating	Recommended fuse rating
Fronius Primo GEN24 3.0 kW	1	3 000 W	63 A	32 A
Fronius Primo GEN24 3.6 kW	1	3 680 W	63 A	32 A
Fronius Primo GEN24 4.0 kW	1	4 000 W	63 A	40 A
Fronius Primo GEN24 4.6 kW	1	4 600 W	63 A	40 A
Fronius Primo GEN24 5.0 kW	1	5 000 W	63 A	40 A
Fronius Primo GEN24 6.0 kW	1	6 000 W	63 A	40 A

Connecting the inverter to the public grid (AC side)

Safety

⚠ WARNING!

Danger due to incorrect operation and incorrectly performed work.
This can result in serious injury and damage to property.
- ▶ Read the Installation and Operating Instructions before installing and commissioning the equipment.
- ▶ Only qualified personnel are authorised to commission your inverter and only within the scope of the respective technical regulations.

⚠ WARNING!

Danger due to grid voltage and DC voltage from solar modules that are exposed to light.
An electric shock can be fatal.
- ▶ Prior to any connection work, disconnect the inverter on the AC side and the DC side.
- ▶ Only an authorised electrical engineer is permitted to connect this equipment to the public grid.

⚠ WARNING!

Danger due to damaged and/or contaminated terminals.
This can result in serious injury and damage to property.
- ▶ Before making any connections, check the terminals for damage and contamination.
- ▶ Remove contamination in the de-energized state.
- ▶ Have defective terminals repaired by an authorised specialist.

IMPORTANT!
National standards and guidelines regarding load unbalance must be taken into account. The inverter does not have a communication link and does not automatically disconnect from the grid when the load unbalance is exceeded.

If the inverter is installed in Australia or New Zealand (required standard: AS/NZS4777.2:2020), the inverter must not be used as part of a three-phase combination, as there is no communication link between the inverters.

Connecting the inverter to the public grid (AC side)

NOTE!

The neutral conductor must be connected in order to operate the inverter.
It is not possible to operate the inverter in unearthed grids, such as IT grids (insulated grids without ground conductor).
- ▶ Make sure that the grid's neutral conductor is earthed.

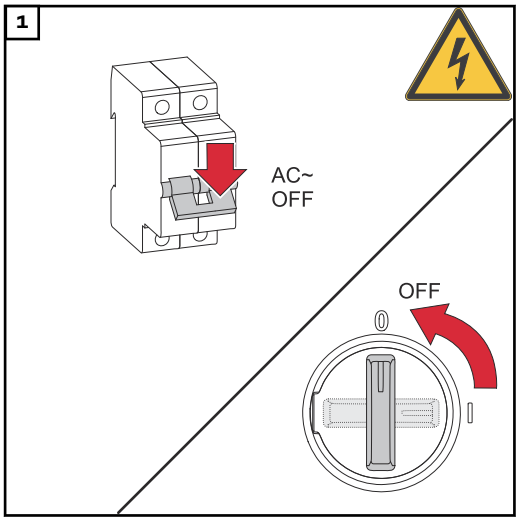

Turn off the automatic circuit breaker. Set the DC disconnector to the "Off" switch position.

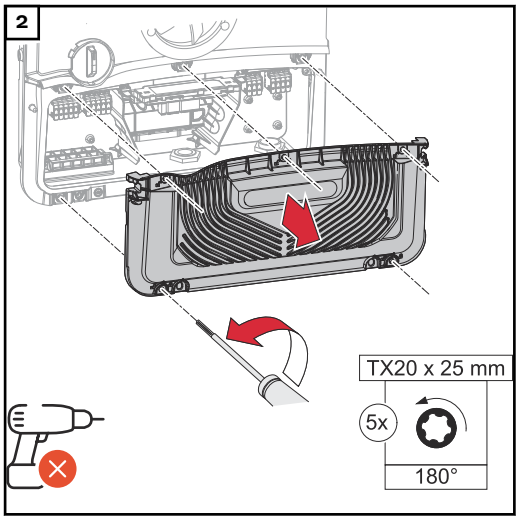

Loosen the 5 screws of the connection area cover by rotating them 180° to the left using a screwdriver (TX20). Remove the connection area cover from the device.

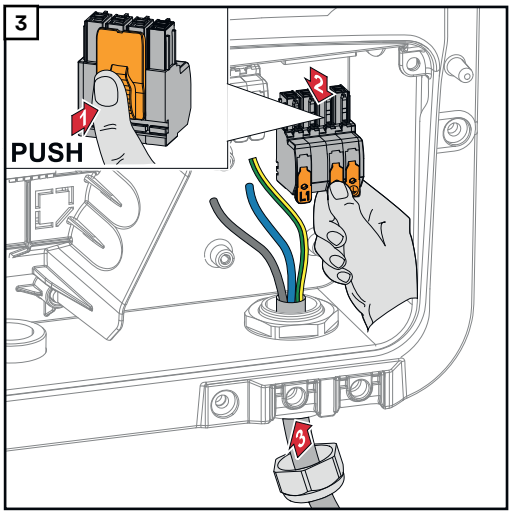

Press the lock on the back of the terminal and remove the AC terminal. Guide the mains cable from below through the cable gland on the right side.

IMPORTANT!
The ground conductor must be dimensioned longer and laid with a movement loop so that it strained last in the event of a failure of the cable gland. For more information on the cable gland, see chapter **Cable diameter of the AC cable** on page69.

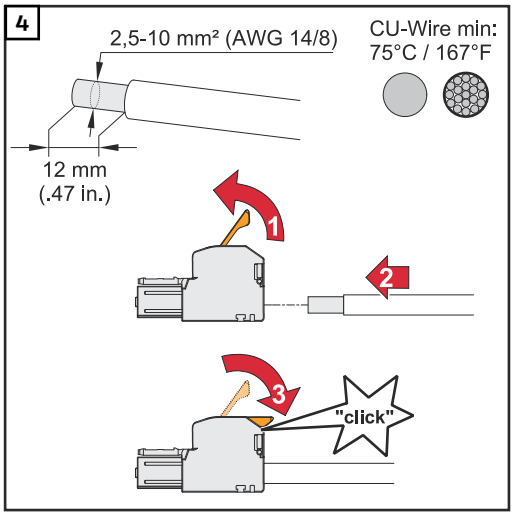

Strip the insulation of the single conductors by 12 mm.
Select the cable cross section in accordance with the instructions in **Permissible cables for the electrical connection** from page **67**.
Lift to open the terminal's operating lever and insert the stripped single conductor into the slot provided as far as it will go.
Then close the operating lever until it engages.

IMPORTANT!
Only one line may be connected to each pole. The AC cables can be connected to the AC terminal without ferrules.

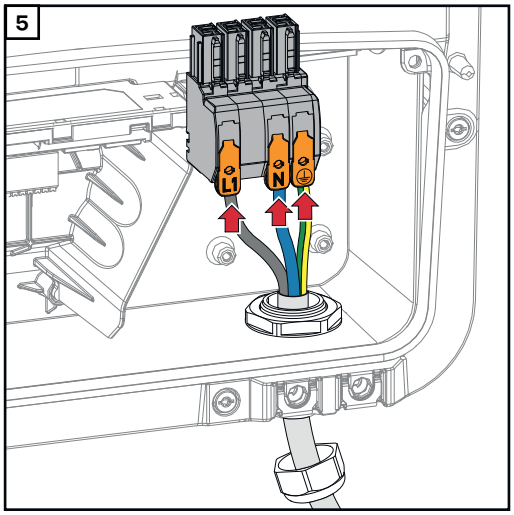

L1	Phase conductor
N	Neutral conductor
PE	Ground conductor

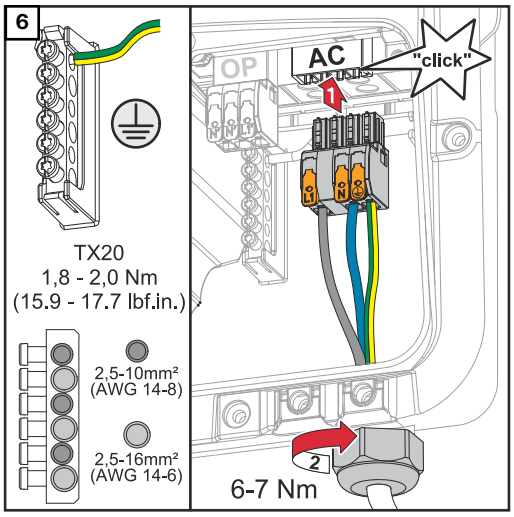

Insert the AC terminal into the AC slot until it engages. Fasten the union nut of the cable gland with a torque of 6 - 7 Nm.

Connecting solar module strings to the inverter

General comments regarding PV modules

To enable suitable PV modules to be chosen and to use the inverter as efficiently as possible, it is important to bear the following points in mind:

- If insolation is constant and the temperature is falling, the open-circuit voltage of the PV modules will increase. The open-circuit voltage must not exceed the maximum permissible system voltage. If the open-circuit voltage exceeds the specified values, the inverter will be destroyed and all warranty claims will be forfeited.
- The temperature coefficients on the data sheet of the PV modules must be observed.
- Exact values for sizing the PV modules can be obtained using suitable calculation tools, such as the **Fronius Solar.creator**.

IMPORTANT!
Before connecting up the PV modules, check that the voltage for the PV modules specified by the manufacturer corresponds to the actual measured voltage.

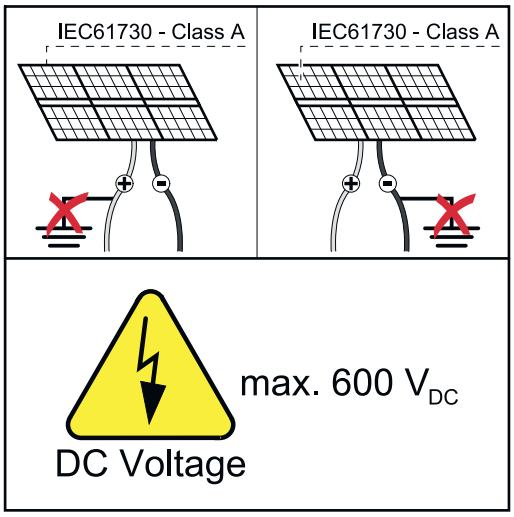

IMPORTANT!
The PV modules connected to the inverter must comply with the IEC 61730 Class A standard.

IMPORTANT!
Solar module strings must not be earthed.

Safety

⚠ WARNING!

Danger due to incorrect operation and incorrectly performed work.
This can result in serious injury and damage to property.

- ▶ Commissioning as well as maintenance and service work in the power module of the inverter must only be carried out by service personnel trained by Fronius and only within the scope of the respective technical regulations.
- ▶ Read the Installation and Operating Instructions before installing and commissioning the equipment.

⚠ WARNING!

Danger due to grid voltage and DC voltage from solar modules that are exposed to light.
This can result in serious injury and damage to property.

- ▶ Ensure that the AC and DC side of the inverter are de-energised before carrying out any connection, maintenance or service tasks.
- ▶ Only an authorised electrical engineer is permitted to connect this equipment to the public grid.

⚠ WARNING!

Danger due to damaged and/or contaminated terminals.
This can result in serious injury and damage to property.

- ▶ Before making any connections, check the terminals for damage and contamination.
- ▶ Remove contamination in the de-energized state.
- ▶ Have defective terminals repaired by an authorised specialist.

Module array - general information

2 independent PV inputs (PV 1 and PV 2) are available. These can be connected to a different number of modules.

When using for the first time, set up the module array according to the respective configuration (also possible later in the **"System configuration"** menu under the **"Components"** menu item).

Module array configuration 3 - 6 kW

IMPORTANT!
The installation must be carried out in accordance with the nationally applicable standards and directives. If the Arc Fault Circuit Interrupter integrated in the inverter is used for the requirement according to IEC 63027 for arc detection, the solar module strings must not be combined upstream of the inverter.

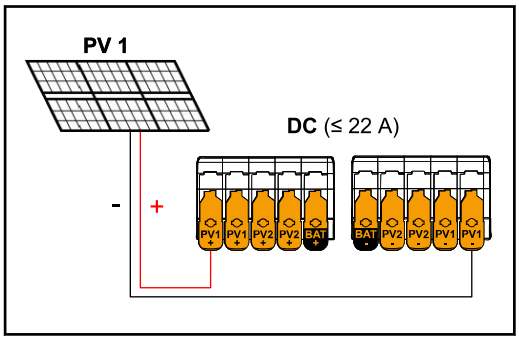

Current equal to or less than 22 A (I_{dcmax}).

Module array settings:
PV 1: **ON**
PV 2: **OFF**

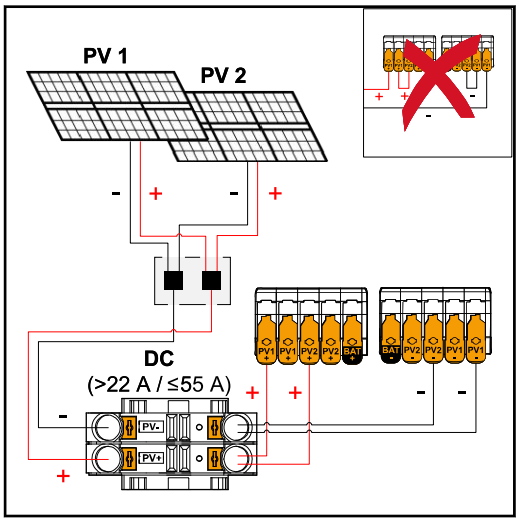

Combined solar module strings with total current greater than 22 A (I_{dcmax}).

Module array settings:
PV 1: **ON**
PV 2: **OFF**
PV 1 + PV 2 (connected in parallel): **ON**

IMPORTANT!
The maximum current load of a single terminal is 22 A. PV-connection strings with a total current of more than 22 A must be split between both PV inputs upstream of the terminals ($I_{SC\ max}$ ≤ 55 A). The plug connection for splitting the total current must be sufficiently dimensioned, suitable and correctly installed. Splitting the current by bridging from PV 1 to PV 2 at the terminal is not permitted.

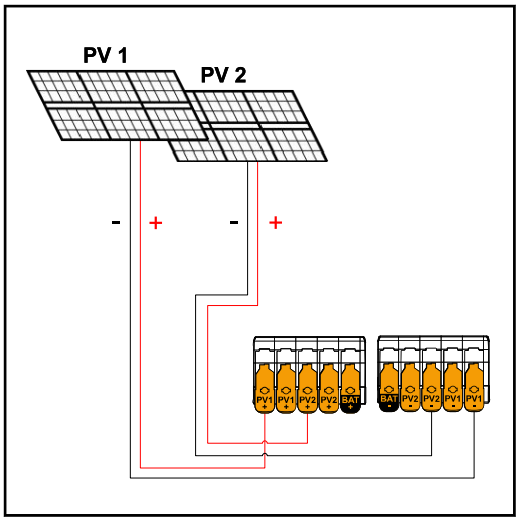

PV 1 less than or equal to 36 A ($I_{SC\ PV1}$)
PV 2 less than or equal to 19 A ($I_{SC\ PV2}$)

Module array settings:
PV 1: **ON**
PV 2: **ON**

Connecting the solar module strings to the inverter

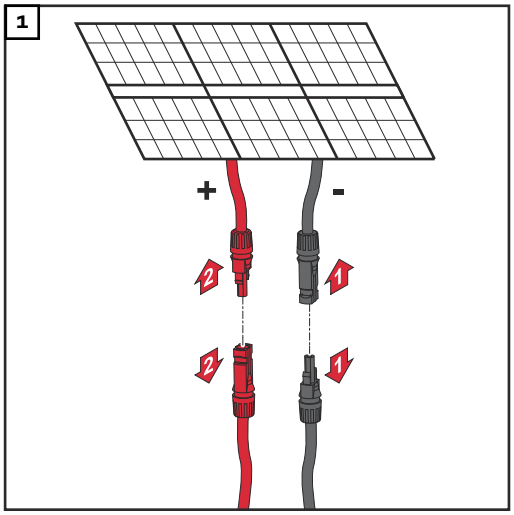

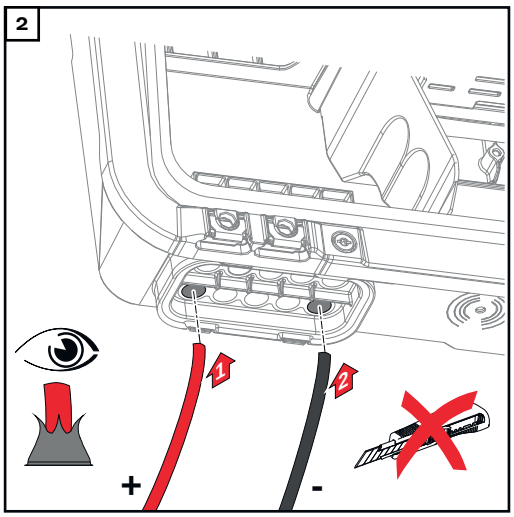

Push the DC cables through the DC bushings by hand.

IMPORTANT!
Before stripping the insulation, push the cables through the DC bushings to prevent individual wires being bent or broken.

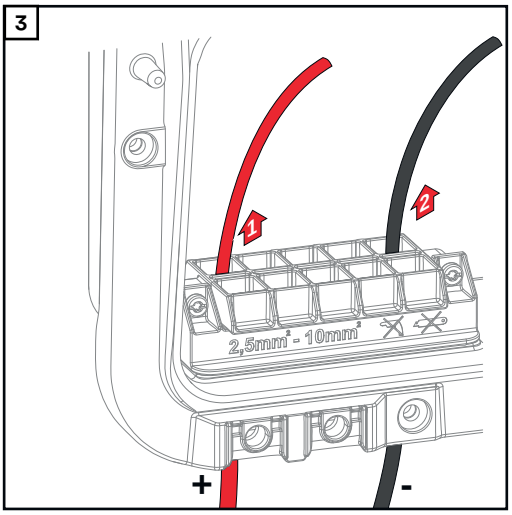
3
1
2
2,5mm² - 10mm²
+
-

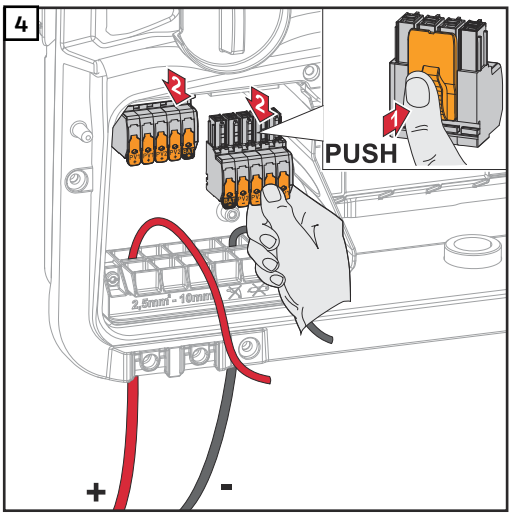
4
2
2
1
PUSH
+
-

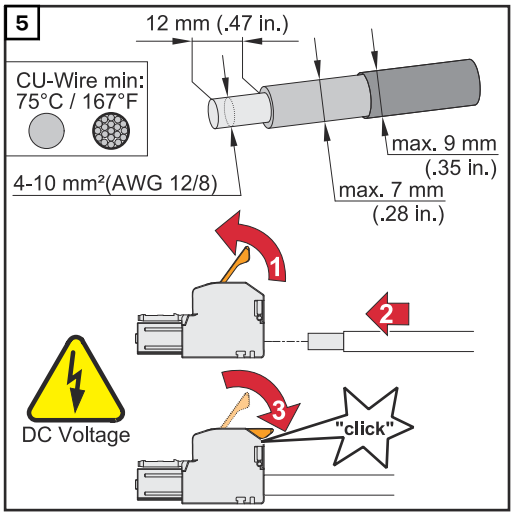

Select the cable cross section in accordance with the instructions in **Permissible cables for the electrical connection** from page **67**.
Strip the insulation of the single conductors by 12 mm. Lift to open the terminal's operating lever and insert the stripped single conductor into the slot provided, in each case as far as it will go. Then close the operating lever until it engages.

⚠ WARNING!

Danger due to individual conductors in the terminal that are loose and/or improperly connected.
This can result in serious injury and damage to property.

- ▶ Only connect one single conductor in the slot provided for each terminal.
- ▶ Check that the single conductor is held securely in the terminal.
- ▶ Ensure that all of the single conductor is within the terminal and that no individual wires are sticking out of the terminal.

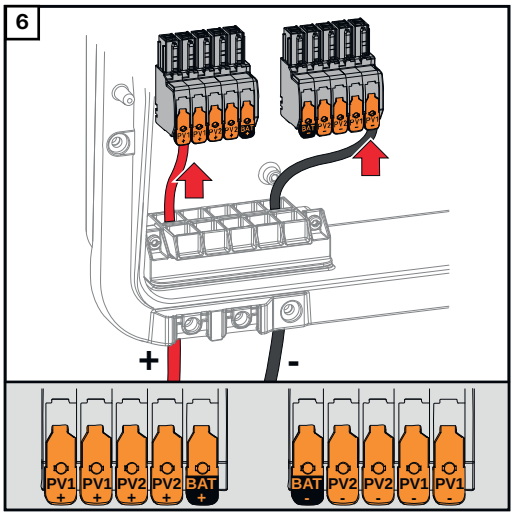

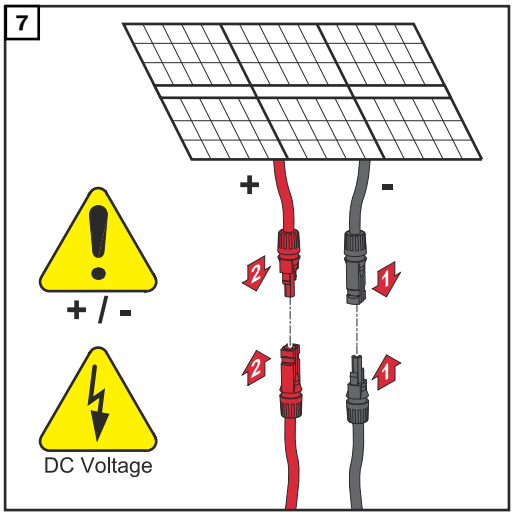

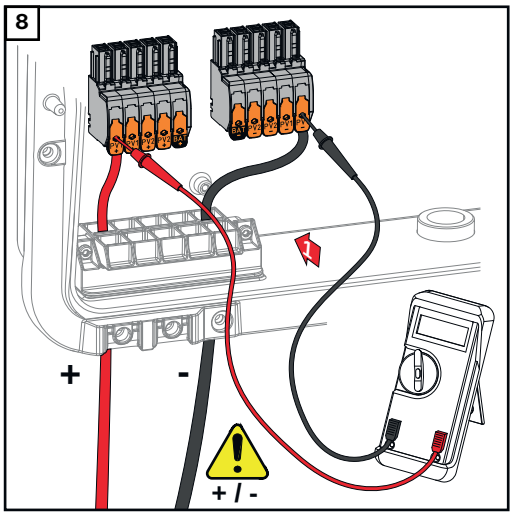

Use a suitable measuring instrument to check the voltage and polarity of the DC cabling. Remove both DC terminals from the slots.

⚠ CAUTION!

Danger due to polarity reversal at the terminals.
This may result in severe damage to the inverter.

- ▶ Use a suitable measuring instrument to check the polarity of the DC cabling.
- ▶ Use a suitable measuring instrument to check the voltage (**max. 600 V_{DC}**)

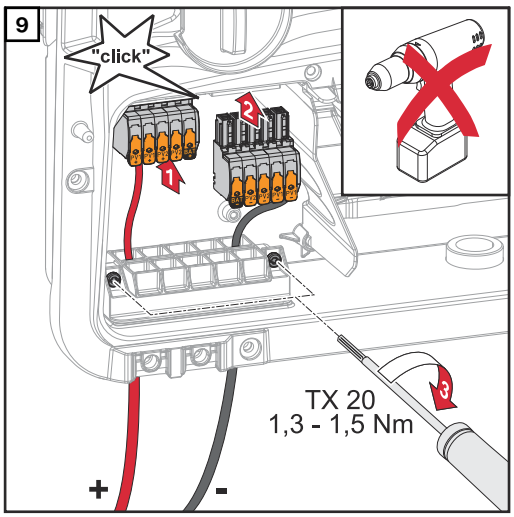

Insert the DC terminals into the respective slot until they engage. Fasten the screws of the cable guide to the housing using a screwdriver (TX20) and a torque of 1.3-1.5 Nm.

NOTE!

Risk due to overtorque on the strain relief.
This may result in damage to the strain-relief device.

- ▶ Do not use a drill driver.

Connecting the battery to the inverter

Safety

⚠ **WARNING!**

Danger due to incorrect operation and incorrectly performed work.
This can result in serious injury and damage to property.

- ▶ Commissioning as well as maintenance and service work on the inverter and battery must only be carried out by service personnel trained by the respective inverter or battery manufacturer and only within the scope of the respective technical regulations.
- ▶ Read the Installation and Operating Instructions provided by the respective manufacturer before installing and commissioning the equipment.

⚠ **WARNING!**

Danger due to grid voltage and DC voltage from solar modules that are exposed to light and from batteries.
This can result in serious injury and damage to property.

- ▶ Ensure that the AC and DC side of the inverter and the battery are de-energised before carrying out any connection, maintenance or service tasks.
- ▶ Only an authorised electrical engineer is permitted to connect this equipment to the public grid.

⚠ **WARNING!**

Danger due to damaged and/or contaminated terminals.
This can result in serious injury and damage to property.

- ▶ Before making any connections, check the terminals for damage and contamination.
- ▶ Remove contamination in the de-energized state.
- ▶ Have defective terminals repaired by an authorised specialist.

Connecting the battery on the DC side

⚠ **CAUTION!**

Danger due to operation of the battery above the permissible altitude as specified by the manufacturer.
Operating the battery above the permissible altitude can result in restricted operation, failure of the operation, and unsafe states of the battery.

- ▶ Adhere to the manufacturer's instructions regarding the permissible altitude.
- ▶ Operate the battery only at the altitude specified by the manufacturer.

IMPORTANT!
Prior to installing a battery, ensure that the battery is switched off. The max. DC cable length for the installation of external batteries must be taken into account according to the manufacturer's specifications, see chapter **Suitable batteries** on page **26**.

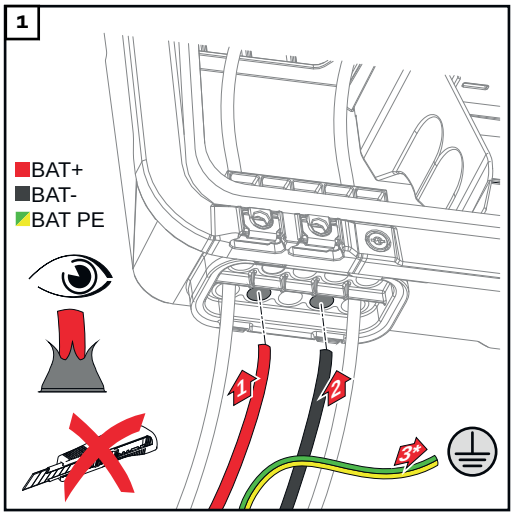

Manually push the battery cables through the DC bushings.

* The battery ground conductor must be connected externally (e.g. switch cabinet). When connecting an LG FLEX battery, the battery ground conductor can be connected in the inverter (see chapter **Connecting the LG FLEX ground conductor** on page **84**. Observe the minimum cross section of the ground conductor to the battery.

IMPORTANT!
Before stripping the insulation, push the cables through the DC bushings to prevent individual wires being bent or broken.

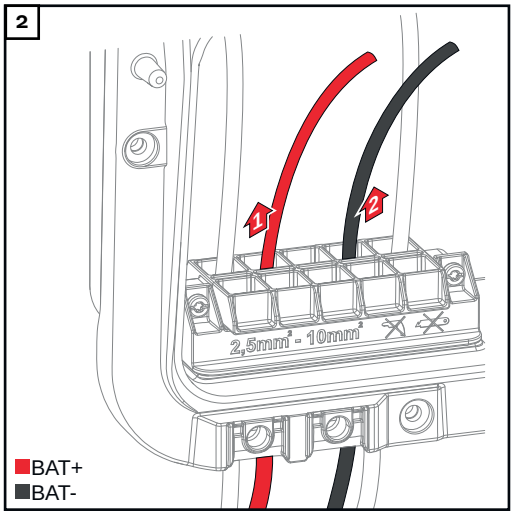

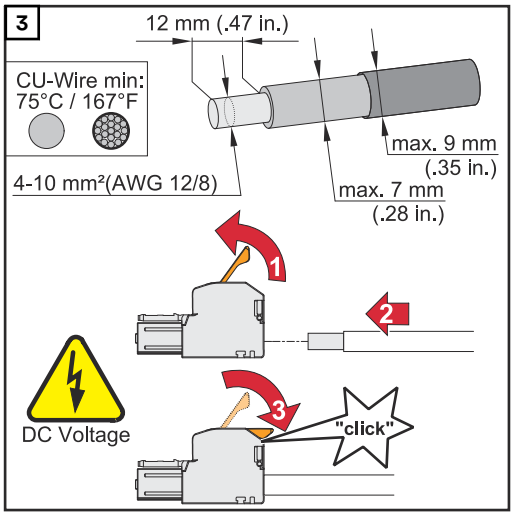

Select the cable cross section in accordance with the instructions in **Permissible cables for the electrical connection** from page **67**.
Strip the insulation of the individual conductors by 12 mm. Lift to open the terminal's operating lever and insert the stripped single conductor into the slot provided, in each case as far as it will go. Then close the operating lever until it engages.

⚠ WARNING!

Danger due to individual conductors in the terminal that are loose and/or improperly connected.
This can result in serious injury and damage to property.

- ▶ Only connect one single conductor in the slot provided for each terminal.
- ▶ Check that the single conductor is held securely in the terminal.
- ▶ Ensure that all of the single conductor is within the terminal and that no individual wire strands are sticking out of the terminal.

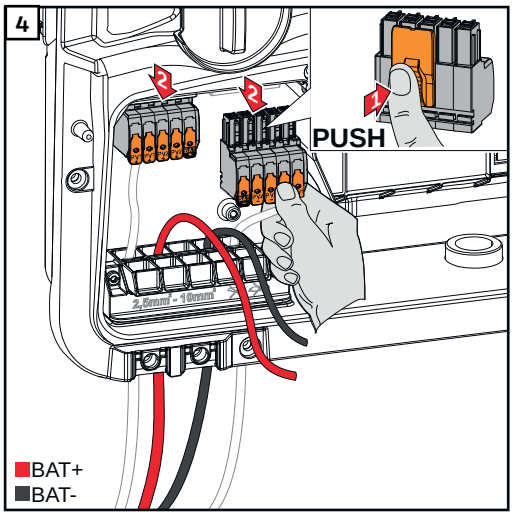

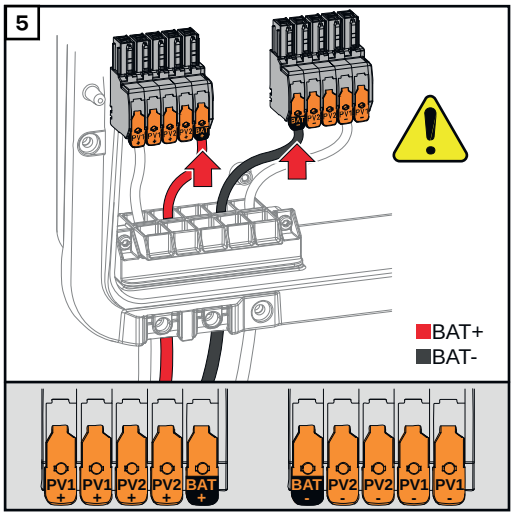

⚠ CAUTION!

Risk due to overvoltage when using other slots on the terminal.
This may result in damage to the battery and/or the PV modules due to discharge.

▶ Only use the slots marked BAT for connecting the battery.

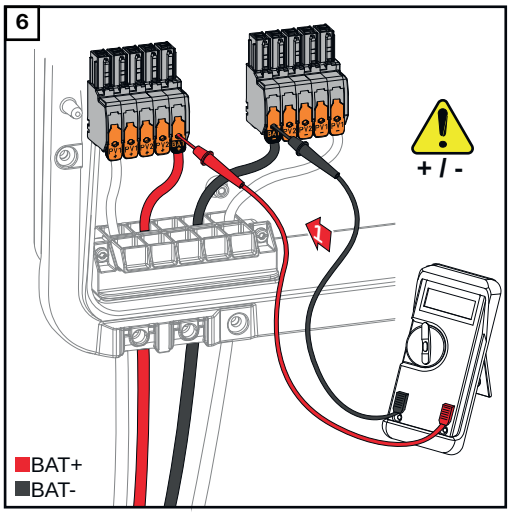

⚠ CAUTION!

Danger due to polarity reversal at the terminals.
Serious damage to the PV system may result.

▶ Use a suitable measuring instrument to check the polarity of the DC cabling when the battery is switched on.

▶ The maximum voltage for the battery input must not be exceeded (see **Technical data** on page **182**).

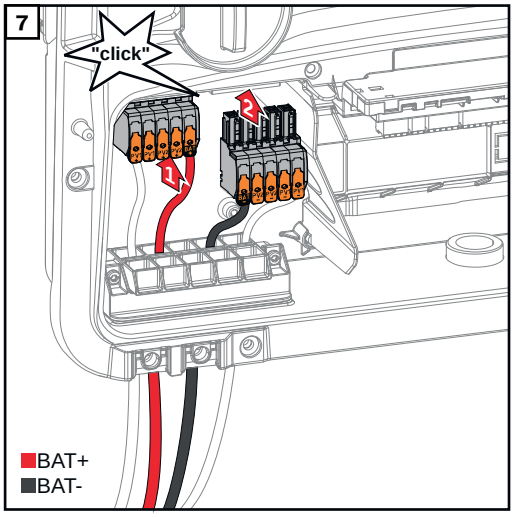

Insert the DC terminals into the respective slot until they engage.

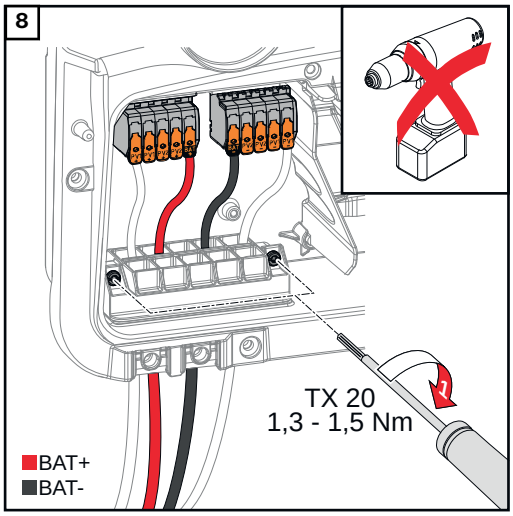

Fasten the screws of the cable guide to the housing using a screwdriver (TX20) and a torque of 1.3 – 1.5 Nm.

NOTE!

Risk due to overtorque at the strain-relief device.
This may result in damage to the strain-relief device.
▶ Do not use a drill driver.

IMPORTANT!
Information for the battery-side connection can be found in the Installation Instructions from the relevant manufacturer.

Connecting the LG FLEX ground conductor

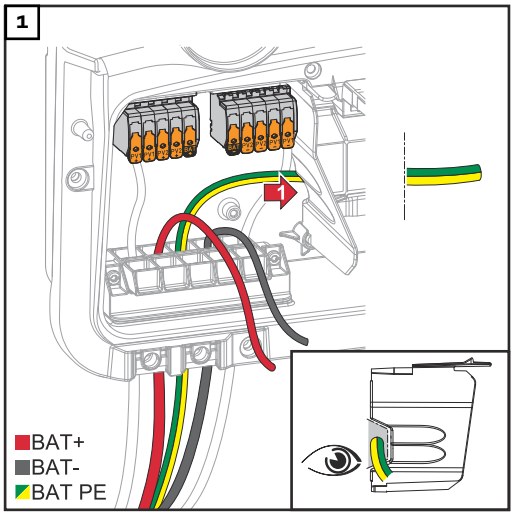

Route the battery ground conductor into the integrated cable duct of the connection area divider and into the AC connection area.

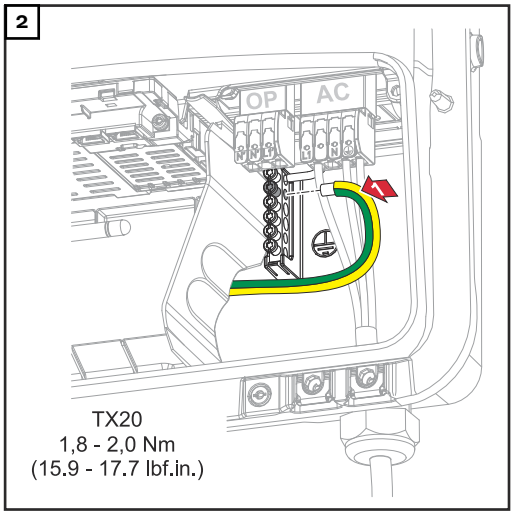

Fasten the battery ground conductor to the second input of the ground electrode terminal from the top using a screwdriver (TX20) and a torque of 1.8 – 2 Nm.

IMPORTANT!
Information for the battery-side connection can be found in the Installation Instructions from the relevant manufacturer.

Connecting backup power - PV Point (OP)

Safety

⚠ WARNING!

Danger due to work that has been carried out incorrectly.
This can result in serious injury and damage to property.
- ▶ Installing and connecting an option must only be carried out by service personnel trained by Fronius and only within the scope of the respective technical regulations.
- ▶ Follow the safety rules.

⚠ WARNING!

Danger due to damaged and/or contaminated terminals.
This can result in serious injury and damage to property.
- ▶ Before making any connections, check the terminals for damage and contamination.
- ▶ Remove contamination in the de-energized state.
- ▶ Have defective terminals repaired by an authorised specialist.

NOTE!

During the switch from grid-connected operation to backup power mode, momentary interruptions will occur. The PV Point output requires PV power from the solar modules or a battery to power the connected loads.
Connected loads will not be supplied with power during the switchover.
- ▶ Do not connect any loads that require an uninterruptible supply (e.g. IT networks, life-sustaining medical devices).

IMPORTANT!
The valid national laws, standards and provisions, as well as the specifications of the relevant grid operator are to be taken into account and applied.
It is highly recommended that the specific installation be agreed with the grid operator and explicitly approved by this operator. This obligation applies to system constructors in particular (e.g. installers).

Installation

NOTE!

All loads that have to be supplied via the OP terminal must be protected by means of a residual current circuit breaker.
In order to ensure the residual current circuit breaker operates properly, a connection must be established between the neutral conductor N´ (OP) and earth.

For the Circuit Diagram recommended by Fronius, see **Circuit Diagram - PV Point (OP)** on page **213**.

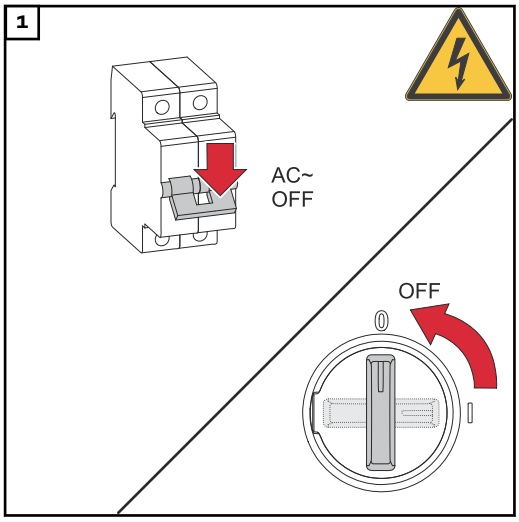

Switch off the automatic circuit breaker and DC disconnector. Turn the DC disconnector to the "Off" switch position.

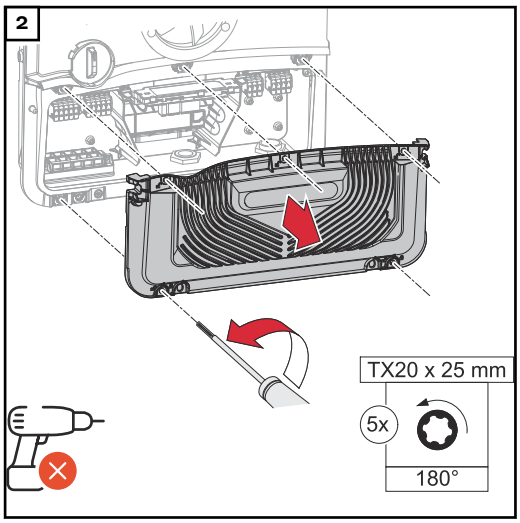

Loosen the 5 screws of the connection area cover by rotating them 180° to the left using a screwdriver (TX20). Remove the connection area cover from the device.

⚠ CAUTION!

Danger from faulty or incorrect holes.
This may lead to injuries to the eyes and hands as a result of flying debris and sharp edges, as well as damage to the inverter.

- ▶ When drilling, wear suitable protective goggles.
- ▶ Only use a step drill when drilling.
- ▶ Ensure that nothing is damaged inside the device (e.g. connection block).
- ▶ Adapt the diameter of the hole to match the corresponding connection.
- ▶ Deburr the holes using a suitable tool.
- ▶ Remove the drilling residues from the inverter.

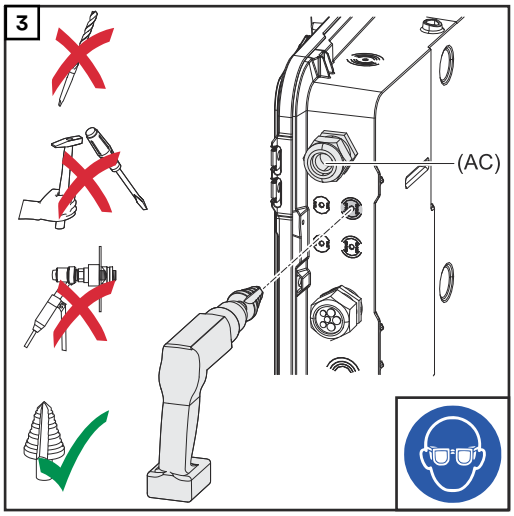

Drill out the optional cable guide with a step drill.

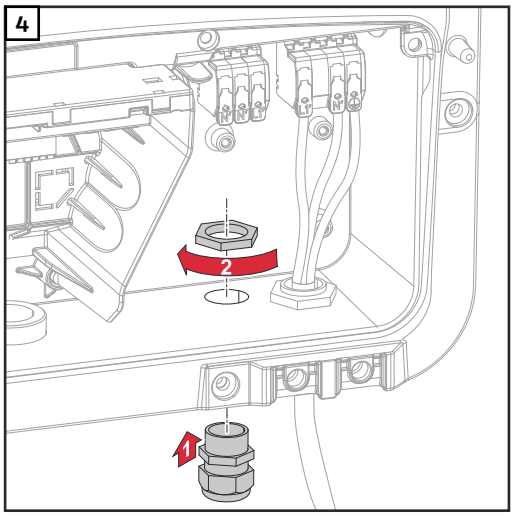

Insert the cable gland into the hole and secure to the torque specified by the manufacturer.

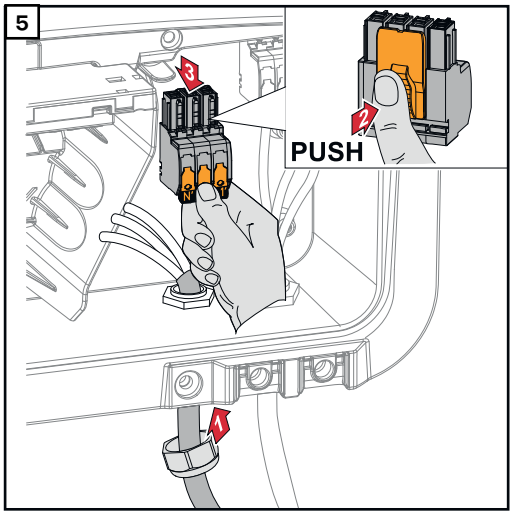

Guide the mains cable through the cable gland from below.
Pull off the OP terminal.

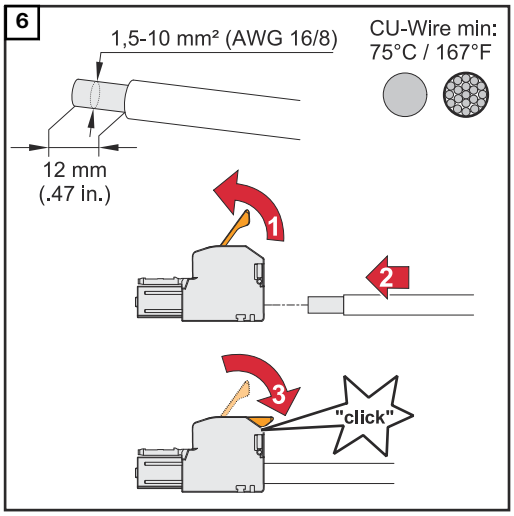

Strip the insulation of the single conductors by 12 mm.
The cable cross section must be between 1.5 mm² and 10 mm². Lift to open the terminal's operating lever and insert the stripped single conductor into the slot provided, all the way up to the stop. Then close the operating lever until it engages.

⚠ WARNING!

Danger due to individual conductors in the terminal that are loose and/or improperly connected.
This can result in serious injury and damage to property.

- ▶ Only connect one single conductor in the slot provided for each terminal.
- ▶ Check that the single conductor is held securely in the terminal.
- ▶ Ensure that all of the single conductor is within the terminal and that no individual wires are sticking out of the terminal.

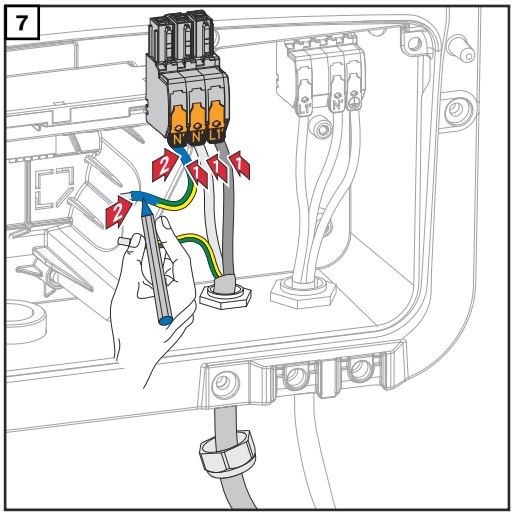

L1´	Phase conductor
N´	Neutral conductor
N´	PEN conductor

IMPORTANT!
The PEN conductor must be produced with ends that are permanently marked blue, according to the national provisions, and have a cross section of 10 mm².

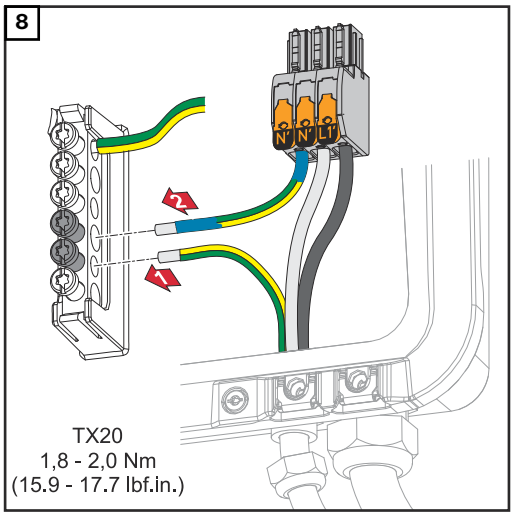

Fasten the ground conductor and PEN conductor to the ground electrode terminal using a screwdriver (TX20) and a torque of 1.8 – 2 Nm.

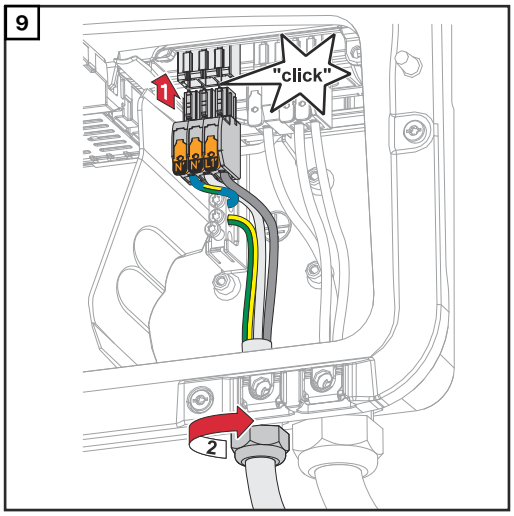

Insert the OP terminal into the OP slot until it engages. Tighten the union nut of the cable gland to the torque specified by the manufacturer.

Testing backup power mode

After the initial installation and configuration of the backup power operation, it is recommended to test the backup power operation. For test mode, a battery charge of min. 30 % is recommended.

A description on how to run test mode can be found in the **backup power checklist** (https://www.fronius.com/en/search-page, item number: 42,0426,0365).

Connecting backup power - Full Backup

Safety

⚠ **WARNING!**

Danger from incorrect installation, commissioning, operation or incorrect use.
This can result in severe personal injury/damage to property.

- ▶ Only trained and qualified personnel are authorised to install and commission the system, and only within the scope of the technical regulations.
- ▶ The Installation and Operating Instructions must be read carefully prior to use.
- ▶ If anything is unclear, contact your vendor immediately.

IMPORTANT!
The valid national laws, standards and provisions, as well as the specifications of the relevant grid operator are to be taken into account and applied.
It is highly recommended to coordinate the concrete examples implemented and in particular the specific installation with the grid operator to obtain their explicit approval. This obligation applies to system constructors in particular (e.g. installers).
The examples suggested here show a backup power supply with or without an external protection relay (external grid and system protection unit). Whether an external protection relay must be used or not is the decision of the respective grid operator.

IMPORTANT!
An uninterruptible power supply (UPS) may only be used to supply individual loads (e.g. computers). Feeding into the power supply of the house network is not permitted. The Installation and Operating Instructions must be read carefully prior to use. If anything is unclear, contact your vendor immediately.

The examples given in this document (in particular cabling variants and Circuit Diagrams) are suggestions only. These examples have been carefully developed and tested. They can therefore be used as a basis for real-life installation. Anyone following or using these examples does so at their own risk.

Automatic switch to backup power 1-pin separation, e.g. Austria or Australia

Circuit diagrams on page. on page .

Cabling of backup power circuit and non-backup power circuits:If not all the loads in the home need to be supplied in a backup power situation, the circuits need to be divided into backup power circuits and non-backup power circuits. The total load of the backup power circuits must not exceed the rated power of the inverter.The backup power circuits and non-backup power circuits must be fused separately according to the required safety measures (residual current circuit breaker, automatic circuit breaker, etc.)In backup power mode, only the backup power circuits are 1-pin disconnected from the grid by contactor K1. The rest of the home network is not supplied with power in this case.

The following points regarding cabling must be considered:

- The main contacts of contactor K1 must be installed between the Fronius Smart Meter and the inverter and the residual current circuit breaker of the backup power circuits.
- The supply voltage for contactor K1 is provided by the public grid and must be connected to phase 1 (L1) after the Fronius Smart Meter and fused accordingly.
- An NC contact for relay K3 interrupts the supply voltage to contactor K1. This prevents the backup power network of the inverter from being switched to the public grid.
- The NO contact of relay K3 gives feedback to the inverter on whether the locking was successfully performed by relay K3.
- Additional inverters or other AC sources can be installed in the backup power circuit after the main contacts of K1. The sources are not synchronised to the network of the inverter because this backup power network has a frequency of 53 Hz.

Automatic switch to backup power 2-pin separation, e.g. Germany, France, UK, Spain

Circuit diagrams on page. on page. on page. on page .

Cabling of backup power circuit and non-backup power circuits: If not all the loads in the home need to be supplied in a backup power situation, the circuits need to be divided into backup power circuits and non-backup power circuits. The total load of the backup power circuits must not exceed the rated power of the inverter. The emergency power circuits and non-emergency power circuits must be fused separately according to the required safety measures (residual current circuit breaker, automatic circuit breaker, etc.).In backup power mode, only the backup power circuits are all-pin disconnected from the grid by contactor K1; a ground connection is only established for these circuits. The rest of the home network is not supplied with power in this case.

The following points regarding cabling must be considered:

- The main contacts of contactor K1 must be installed between the Fronius Smart Meter and the residual-current circuit breaker of the inverter or the residual-current circuit breaker of the emergency power circuits.
- The supply voltage for contactor K1 is provided by the public grid and must be connected to phase 1 (L1) after the Fronius Smart Meter and fused accordingly.
- To ensure residual-current circuit breakers function in backup power mode, the connection between the neutral conductor and the ground conductor must be established as close as possible to the inverter, but in any case upstream of the first residual-current circuit breaker. An NC contact is used for this purpose for each of the main contacts of contactors K4 and K5. This ensures that the ground connection is established as soon as the public grid connection is no longer available.
- As with contactor K1, the supply voltage for contactors K4 and K5 is provided via phase 1 (L1) of the public grid.
- An NC contact for relay K3 interrupts the supply voltage to contactors K1, K4 and K5. This prevents the ground connection from being immediately disconnected again when power returns to the public grid and the backup power network of the inverter from being switched to the public grid.
- The NO contact of relay K3 gives feedback to the inverter on whether the locking was successfully performed by relay K3.
- Additional inverters or other AC sources can be installed in the backup power circuit after the main contacts of K1. The sources are not synchronised to the network of the inverter because this backup power network has a frequency of 53 Hz.
- A Fronius Smart Meter with current transformer is required for the UK (e.g. Fronius Smart Meter 50kA-3 or Fronius Smart Meter TS 5kA-3).

Automatic switch to backup power 2-pin double separation with ext. grid and system protection - e.g. Italy

Circuit diagram on page .

Cabling for backup power circuit and non-backup power circuits:IMPORTANT! Fronius Smart Meter US-240 must be used for these circuit variants.The backup power circuits and non-backup power circuits must be fused separately according to the required safety measures (residual current circuit breaker, automatic circuit breaker, etc.)In backup power mode, only the backup power circuits are disconnected from the grid by contactors K1 and K2; an earth connection is only established for these circuits. The rest of the home network is not supplied with power in this case.

The following points regarding cabling must be considered:

- The main contacts of contactors K1 and K2 must be installed between the Fronius Smart Meter and the residual-current circuit breaker of the inverter and the residual-current circuit breaker of the backup power circuits.
- The supply voltage for contactors K1 and K2 is provided by the public grid and must be connected to phase 1 (L1) downstream of the Fronius Smart Meter and fused accordingly.
- Actuation of contactors K1 and K2 is carried out by the external grid and system protection unit.
- The external grid and system protection unit must be installed downstream of the Fronius Smart Meter. Precise installation and wiring instructions for the external grid and system protection unit can be found in its separate Operating Instructions.
- The remote trip input of the external grid and system protection unit must be set to NC according to the manufacturer's Operating Instructions.
- To ensure residual-current circuit breakers function in backup power mode, the connection between the neutral conductor and the ground conductor must be established as close as possible to the inverter, but in any case upstream of the first residual-current circuit breaker. An NC contact is used for this purpose for the main contacts of contactors K4 and K5. This ensures that the ground connection is established as soon as the public grid connection is no longer available.
- The supply voltage for contactors K1, K2, K4 and K5 is provided via phase 1 (L1) of the public grid and is switched via the external grid and system protection unit.
- An NC contact for relay K3, which activates the remote input of the external grid and system protection unit, interrupts the supply voltage to contactors K1, K2, K4 and K5. This prevents the ground connection from being immediately disconnected again when power returns to the public grid and the backup power network of the inverter from being switched to the public grid.
- The NO contact of relay K3 gives additional feedback to the inverter on whether the locking was successfully performed by relay K3.
- Additional inverters or other AC sources can be installed in the backup power circuit downstream of the main contacts of K1 and K2. The sources are not synchronised to the network of the inverter because this backup power network has a frequency of 53 Hz.

Manual switch to backup power 1-pin separation, e.g. Australia / 2-pin separation, e.g. Germany

Circuit diagrams on page. on page .

IMPORTANT!The Circuit Diagrams to be used are to be applied depending on the country standard and implementation regulations of the grid operator.

Cabling of backup power circuit and non-backup power circuits If not all the loads in the home need to be supplied in a backup power situation, the circuits need to be divided into backup power circuits and non-backup power circuits. The total load of the backup power circuit must not exceed the rated power of

the inverter.The backup power circuits and non-backup power circuits must be fused separately according to the required safety measures (residual current circuit breaker, automatic circuit breaker, etc.).In backup power mode, only the backup power circuits and inverter are disconnected from the grid by the changeover switch Q1. In the case of two-pin separation, an additional earth connection is established. In this case, the loads in the non-backup circuit are not supplied by the inverter.

The following points regarding installation must be considered

- The changeover switch Q1 must be dimensioned for the fuses installed upstream, the max. occurring amperage and the max. occurring short circuit current. An auxiliary switching element with two NO contacts is required for switch position 1 (grid operation) to match the installed Q1 changeover switch.The Q1 switch used must fulfil a short-circuit breaking capacity of at least 10kA according to the standard IEC 60947-1. If the short circuit current at the installation point reaches a value above 10kA, a switch with an appropriate short-circuit breaking capacity must be used.
- The circuit is to be used exclusively in household applications and installations (small trade and agriculture) or up to upstream fuses with a nominal current of 63A.
- Min. impulse withstand voltage of the changeover switch of 4kV according to IEC 60947-1.
- Whether 1-pin or 2-pin separation is to be used must be clarified with the grid operator.
- The protective measure must be tested regularly; if this is not regulated by law, it must be performed annually.
- Data transfer between the Fronius Smart Meter and the inverter may be interrupted in backup power mode (switch position 2). This is optionally ensured via a contact of the changeover switch. Interrupting the Smart Meter connection is optional and prevents the backup power function from ending when the public grid returns. If this does not take place, the inverter interrupts the backup power supply when the public grid returns. Failure to manually switch to grid-parallel operation within the first 10 minutes of the public grid returning may cause the inverter and battery to shut down. In this case, a manual system start must be carried out. (See chapter on page). This behaviour must be taken into account especially during a test of the manual switchover, because the inverter does not start backup power mode due to the existing Smart Meter data when the grid connection is established.
- The data communication connection with the Fronius Smart Meter must be established separately from the battery to its dedicated Modbus input so that battery data communication is maintained. (See chapter on page).
- Feedback to the digital inputs (IOs) of the inverter via the changeover switch Q1 (switch position 2), is a start condition for the inverter's backup power mode.
- The AC output of the inverter is de-energised when switching over via switch position 0. This is ensured by interrupting the WSD line with 2 contacts of the changeover switch Q1 in position 0.
- The continuous connection between the equipotential bonding rail and the neutral conductor from the inverter must not be interrupted in the case of 1-pin separation.
- In the case of 2-pin separation, the PE-N conductor connection is established via the main contacts of the changeover switch Q1 in a double version.
- Additional inverters or other AC sources can be installed in the backup power circuit after the changeover switch Q1. The sources will not synchronise to the inverter's backup power network in case of backup power because this is operated at 53 Hz.

Testing backup power mode

After the initial installation and configuration of the backup power operation, it is recommended to test the backup power operation. For test mode, a battery charge of min. 30 % is recommended.

A description on how to run test mode can be found in the **backup power checklist** (https://www.fronius.com/en/search-page, item number: 42,0426,0365).

Connecting the data communication cable

Modbus participants

The inputs M0 and M1 can be selected for this purpose. A maximum of 4 Modbus participants can be connected to the Modbus terminal on inputs M0 and M1.

IMPORTANT!
Only one primary meter, one battery and one Ohmpilot can be connected per inverter. Due to the high data transfer of the battery, the battery occupies 2 participants. If the **"Inverter control via Modbus"** function is activated in the **"Communication"** → **"Modbus"** menu, no Modbus participants are possible. It is not possible to send and receive data at the same time.

Example 1:

Input	Battery	Fronius Ohmpilot	Quantity Primary meter	Quantity Secondary meter
Modbus 0 (M0)	✗	✗	0	4
	✓	✗	0	2
	✓	✓	0	1
Modbus 1 (M1)	✗	✗	1	3

Example 2:

Input	Battery	Fronius Ohmpilot	Quantity Primary meter	Quantity Secondary meter
Modbus 0 (M0)	✗	✗	1	3
Modbus 1 (M1)	✗	✗	0	4
	✓	✗	0	2
	✓	✓	0	1

Routing data communication cables

IMPORTANT!
If data communication cables are wired into the inverter, observe the following points:

- Depending on the number and cross section of the wired data communication cables, remove the corresponding blanking plugs from the sealing insert and insert the data communication cables.
- Make sure that you insert the corresponding blanking plugs into any free openings on the sealing insert.

IMPORTANT!
Should the blanking plugs be missing or improperly fitted, then safety class IP66 cannot be guaranteed.

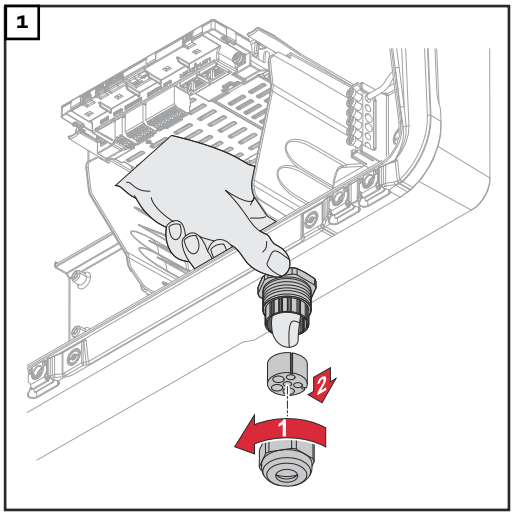

Undo the cable gland union nut and push out the sealing ring and the blanking plug from the inside of the device.

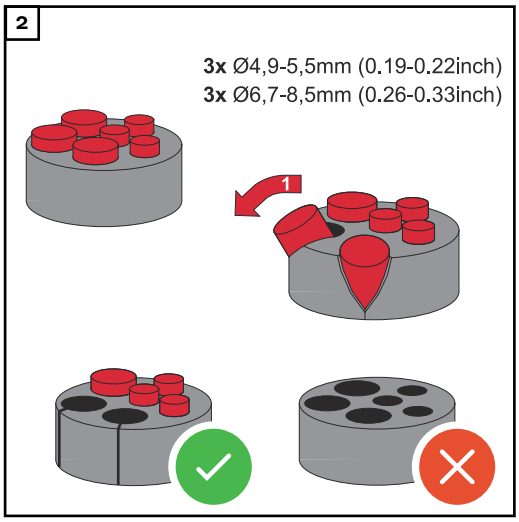

Open up the sealing ring at the location where the blanking plug is to be removed.

* Liberate the blanking plug by moving it sideways.

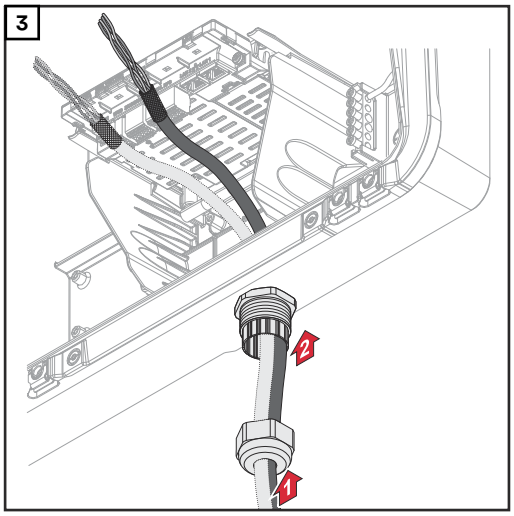

Guide the data cables first through the cable gland union nut and then through the housing opening.

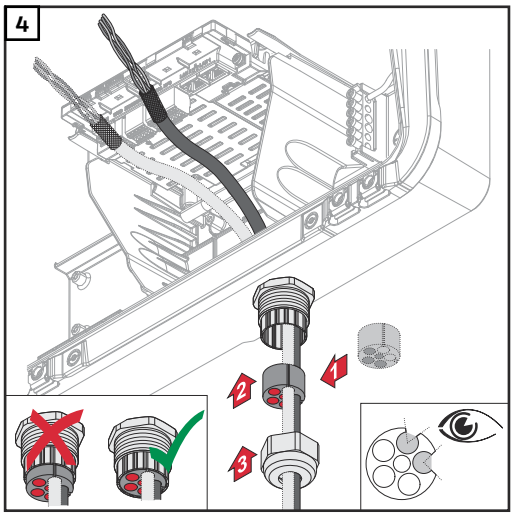

Insert the sealing ring between the union nut and the housing opening. Press the data cables into the seal's cable guide. Then press in the seal until it reaches the underside of the cable gland.

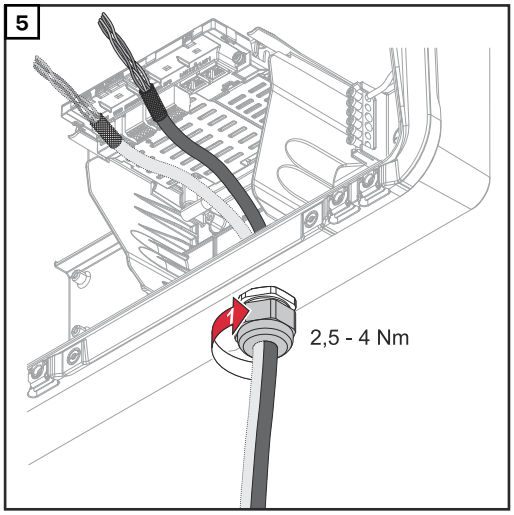

Tighten the union nut for the cable gland to a torque of min. 2.5 to max. 4 Nm.

Connecting the battery communication cable

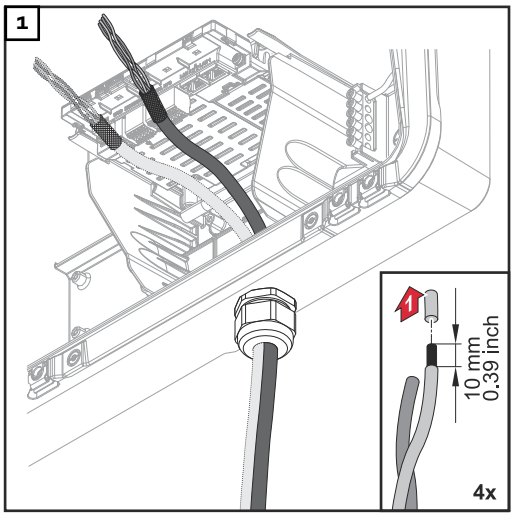

Strip 10 mm from the single conductors and mount the ferrules if necessary.

IMPORTANT!
Connect the individual conductors to an appropriate ferrule if several individual conductors are connected to one input of the push-in terminals.

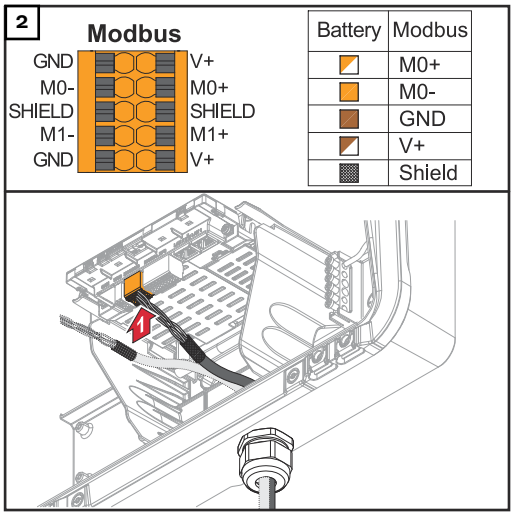

Insert the cable into the respective slot and check the cable is securely retained.

IMPORTANT!
Use only twisted pairs for connecting "Data +/-" and "Enable +/-", see **Permissible cables for the data communication connection** on page **68**.

Twist the cable shield and insert into the "SHIELD" slot.

IMPORTANT!
Improperly fitted shielding can cause data communication problems.

For the wiring proposal recommended by Fronius, see page **209**.

Terminating resistors

It may be possible for the system to function without terminating resistors. However, owing to interference, the use of terminating resistors according to the following overview is recommended for trouble-free functioning.

For permissible cable and max. distances for the data communication range see chapter **Permissible cables for the data communication connection** on page **68**.

IMPORTANT!
Terminating resistors that are not positioned as illustrated can result in interference in the data communication.