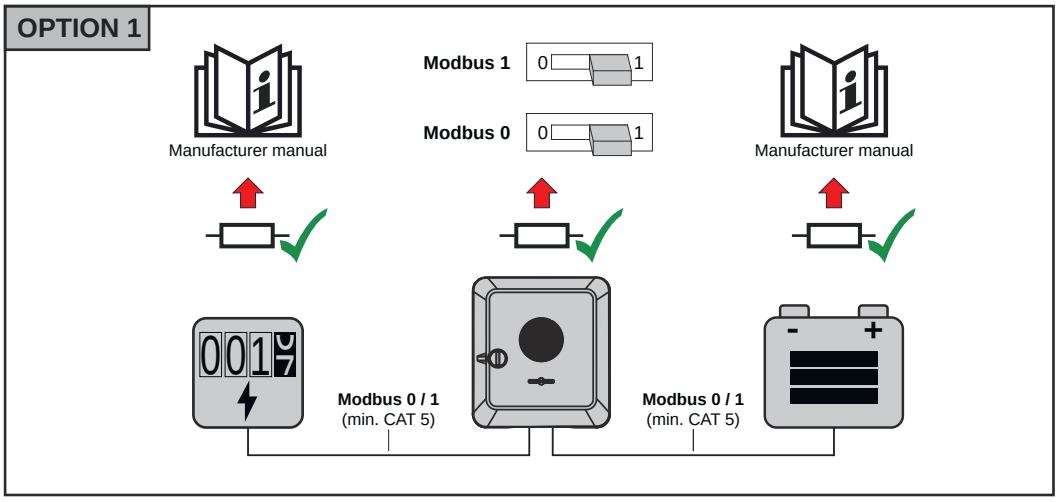
OPTION 1
Manufacturer manual
Modbus 1
0
1
Modbus 0
0
1
Manufacturer manual
Modbus 0 / 1
(min. CAT 5)
Modbus 0 / 1
(min. CAT 5)

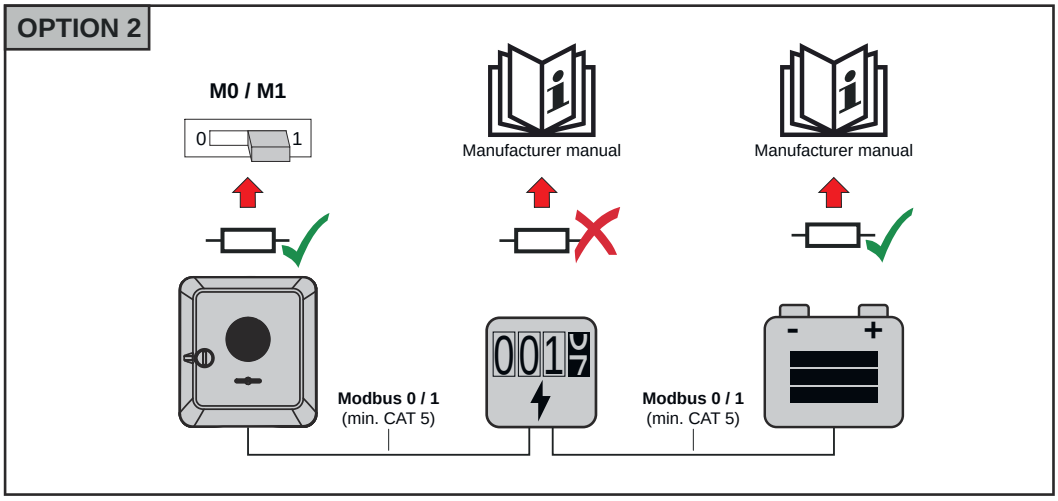
OPTION 2
M0 / M1
0
1
Manufacturer manual
Manufacturer manual
Modbus 0 / 1
(min. CAT 5)
Modbus 0 / 1
(min. CAT 5)

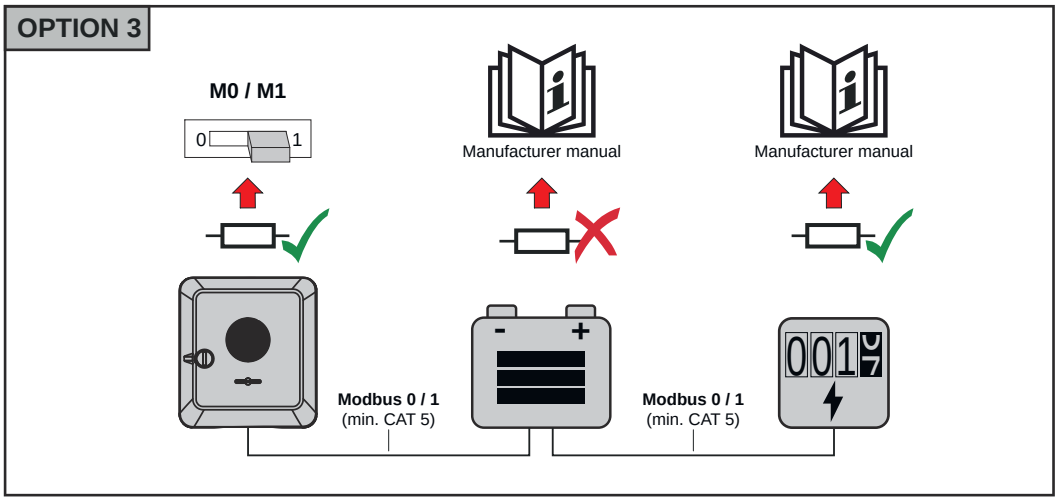
OPTION 3
M0 / M1
0
1
Manufacturer manual
Manufacturer manual
Modbus 0 / 1
(min. CAT 5)
Modbus 0 / 1
(min. CAT 5)

**Installing the WSD (wired shutdown)**

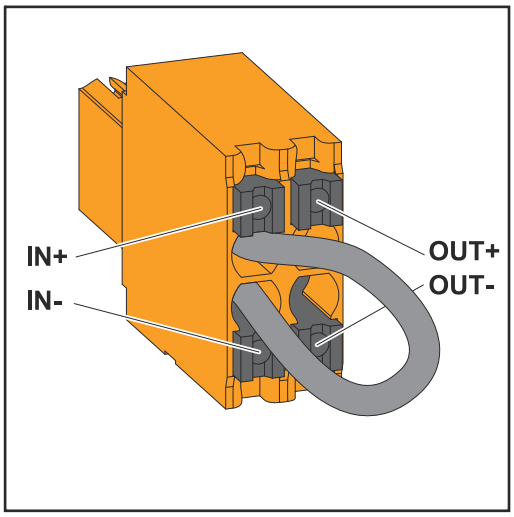


**IMPORTANT!**
The push-in WSD terminal in the inverter's connection area is delivered with a bypass ex works as standard. The bypass must be removed when installing a trigger device or a WSD chain.

The WSD switch of the first inverter with connected trigger device in the WSD chain must be in position 1 (primary device). The WSD switch of all other inverters should be in the 0 (secondary device) position.

Max. distance between 2 devices: 100 m
Max. number of devices: 28

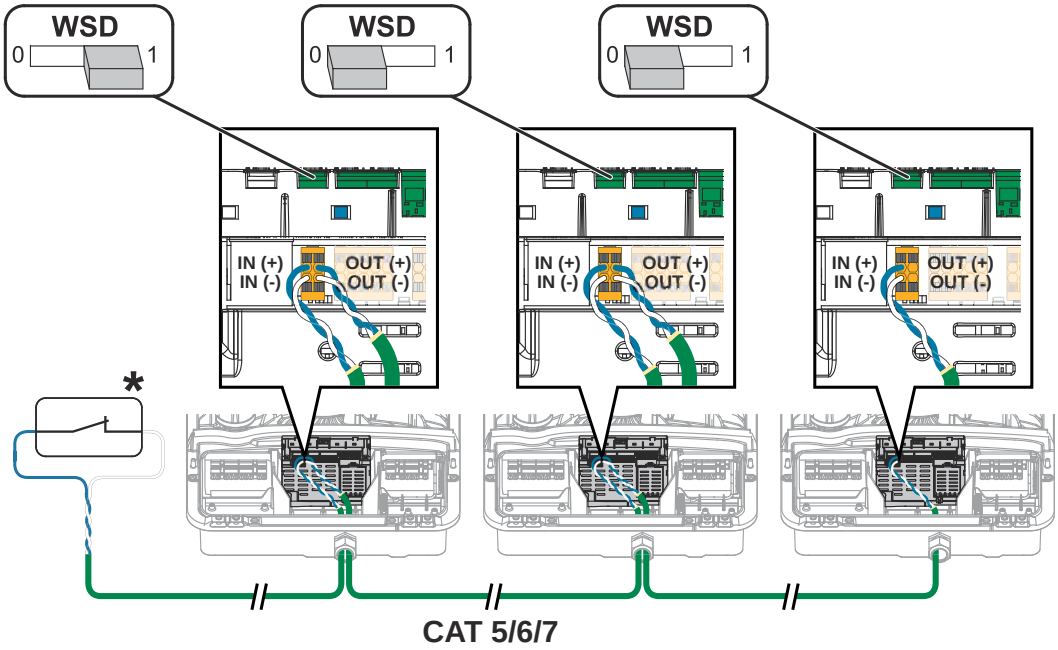


* Floating contact of the trigger device (e.g. central grid and system protection). If several floating contacts are used in a WSD chain, they must be connected in series.

# Closing and commissioning the inverter

**Closing the inverter's connection area/housing cover, and commissioning**

*NOTE!*

**The housing cover is fitted with a lock for safety reasons, which allows the housing cover on the inverter to be pivoted only when the DC disconnector is switched off.**

- ▶ Only clip and pivot the housing cover onto the inverter when the **DC disconnector is switched off**.
- ▶ Do not use excessive force to clip in and pivot the housing cover.

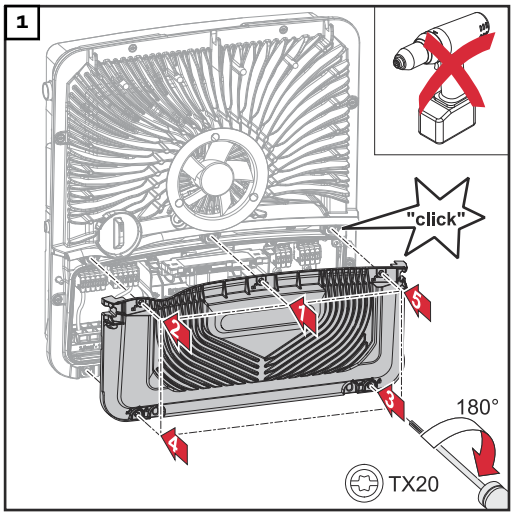


Place the cover on the connection area. Tighten the five screws by rotating them 180° to the right in the indicated order using a screwdriver (TX20).

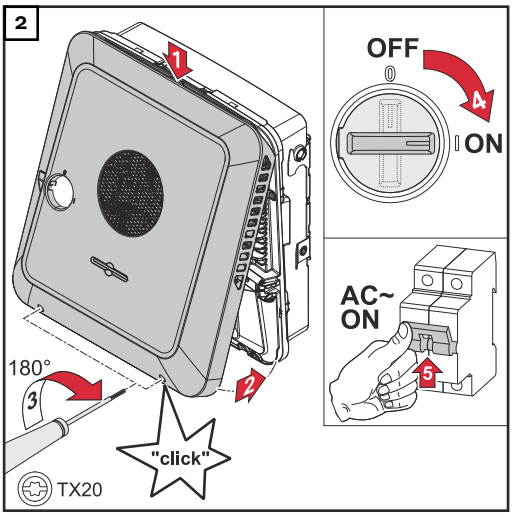


Clip the housing cover in at the top of the inverter.
Press on the lower part of the housing cover and tighten the two screws 180° to the right using a Torx screwdriver (TX20).
Turn the DC disconnector to the "On" switch position. Switch on the automatic circuit breaker. For systems with a battery, observe the switch-on sequence as per chapter **Suitable batteries** on page **26**.

**IMPORTANT!** Open WLAN Access Point with the optical sensor, see chapter **Button functions and LED status indicator** on page **35**

**Starting the inverter for the first time**

When starting the inverter for the first time, various setup settings must be configured.

If the setup process is cancelled before the process is complete, any data that has been input up to this point is lost and the start screen with the installation wizard is shown again. If the process is interrupted, such as in the event of a power outage, the data is saved. Commissioning may be continued from the point at which the process was interrupted once the power supply has been restored. If the setup was interrupted, the inverter feeds energy into the grid at maximum 500 W and the operating status LED flashes yellow.

The country setup can only be set when starting the inverter for the first time. If the country setup needs to be changed at a later date, please contact your installer / Technical Support team.

**Installation with the app**

The "Fronius Solar.start" app is required for this installation method. Depending on the end device with which the installation will be carried out, download the app for the respective platform.

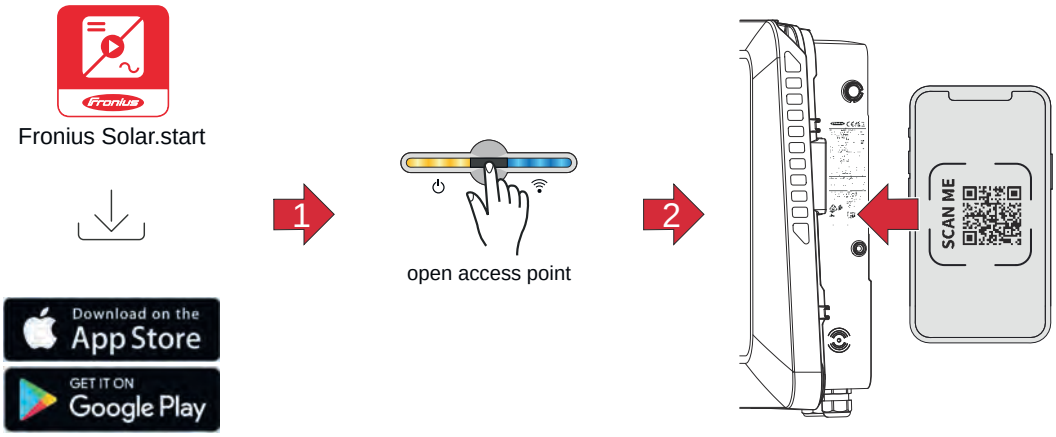


1. Download and install the Fronius Solar.start app.
2. Open the access point by touching the sensor
   ✓ *Communication LED flashes blue.*
3. Open the Solar.start app and follow the installation wizard. Scan the QR code on the rating plate with a smartphone or tablet to connect to the inverter.
4. Add system components in Solar.web and start up the PV system.

The network wizard and the product setup can be carried out independently of each other. A network connection is required for the Solar.web installation wizard.

**Installation using the web browser**

**WLAN:**

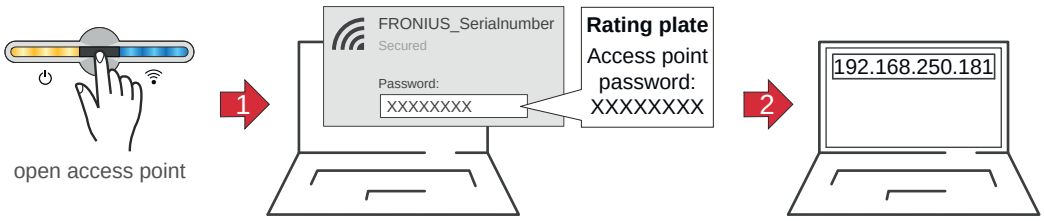


1. Open the access point by touching the sensor
   ✓ *Communication LED flashes blue.*
2. Establish the connection to the inverter in the network settings (the inverter is displayed with the name "FRONIUS_" and the serial number of the device).
3. Enter the password from the rating plate and confirm.
   **IMPORTANT!**
   To enter the password on a Windows 10 operating system, the link "Connect using a security key instead" must first be activated to establish a connection with the password.

4 In the browser address bar, enter and confirm the IP address 192.168.250.181. The installation wizard is opened.

5 Follow the installation wizard in the individual sections and complete the installation.

6 Add system components in Solar.web and start up the PV system.

The network wizard and the product setup can be carried out independently of each other. A network connection is required for the Solar.web installation wizard.

**Ethernet:**

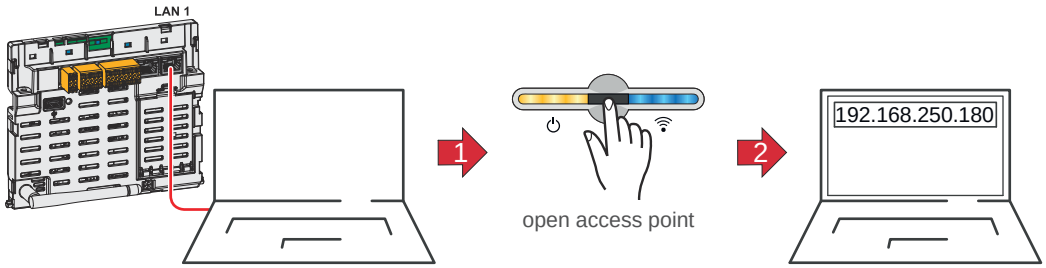


1 Establish a connection to the inverter (LAN1) with a network cable (CAT5 STP or higher).

2 Open the access point by touching the sensor once

✓ *Communication LED flashes blue.*

3 In the browser address bar, enter and confirm IP address 169.254.0.180. The installation wizard is opened.

4 Follow the installation wizard in the individual sections and complete the installation.

5 Add system components in Solar.web and start up the PV system.

The network wizard and the product setup can be carried out independently of each other. A network connection is required for the Solar.web installation wizard.

# Switching off current supply and restarting the inverter

**De-energising the inverter and switching it on again**

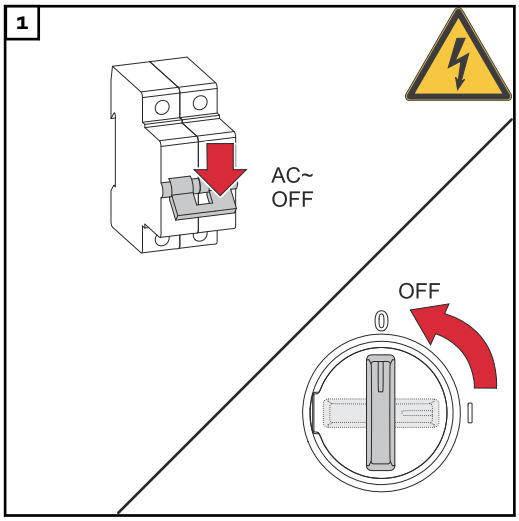


1. Turn off the automatic circuit breaker.
2. Turn the DC disconnector to the "Off" switch position.

To start up the inverter again, follow the steps listed above in reverse order.

# Settings - user interface of the inverter

# User settings

**User login**

1. Open the user interface of the inverter in your browser.
2. In the **"Login"** menu, log in using your user name and password, or go to the **"User"** menu and click on the **"User login"** button and then log in with your user name and password.

**IMPORTANT!**
Depending on the user's authorization, settings can be executed in the individual menus.

**Selecting the language**

1. In the **“User”** menu, click on the **“Language”** button and select the desired language.

# Device configuration

**Components**

Select **"Add component+"** to add all available components to the system.

**PV generator**
Activate the MPP tracker and enter the connected PV power in the associated field. For combined solar module strings, "PV 1 + PV 2 connected in parallel" must be activated.

**Battery**
If the SoC mode is set to "Automatic", the values "Minimum SoC" and "Maximum SoC" are preset according to the technical specifications of the battery manufacturer.

If the SoC mode is set to "Manual", the values "Minimum SoC" and "Maximum SoC" may be changed after consultation with the battery manufacturer within the scope of their technical specifications. In the event of a power outage requiring backup power, the set values are not taken into account.

Using the "Allow battery charging from additional producers in home network" setting, charging of the battery from other external producers is enabled/disabled.

Using the "Allow battery charging from public grid" setting, charging of the battery from the public grid is enabled/disabled.
The normative or feed-in tariff rules must be taken into account with this setting. The setting does not affect the charging of the battery by other producers within the home. It merely relates to the process of drawing charging energy from the public grid. Regardless of this setting, any charging from the public grid that is required for service reasons (e.g. necessary re-charging to protect against deep discharge) is still performed.

**IMPORTANT!**
Fronius accepts no liability for damage to third-party batteries.

**Primary meter**
To ensure smooth operation in conjunction with other energy producers and in Full Backup backup power mode, it is important to install the Fronius Smart Meter at the feed-in point. The inverter and other producers must be connected to the public grid via the Fronius Smart Meter.
This setting also affects the behaviour of the inverter at night. If the function is deactivated, the inverter switches to Standby mode as soon as there is no more PV power available, provided that no energy management command is sent to the battery (e.g. minimum state of charge reached). The message "Power low" is displayed. The inverter restarts as soon as an energy management command is sent or sufficient PV power is available.
If the function is activated, the inverter remains permanently connected to the grid so that energy can be drawn from other producers at any time.
After connecting the meter, the position must be configured. A different Modbus address needs to be set for each Smart Meter.
The Watt value on the generator meter is the sum of all generator meters. The Watt value on the consumption meter is the value of all secondary meters.

**Ohmpilot**
All Ohmpilots available in the system are displayed. Select the desired Ohmpilot and add it to the system via "Add".

**Functions and I/Os**

**Backup power**
"Off", "PV Point" or "Full Backup" can be selected for backup power mode.
**"Full Backup"** backup power mode can only be activated once the required I/O assignments have been configured for backup power. In addition, a meter must be mounted and configured at the feed-in point for **"Full Backup"** backup power mode.

**IMPORTANT!**
When configuring "PV Point" backup power mode, the information in chapter **Safety** on page **85** must be observed.
When configuring "Full Backup" backup power mode, the information in chapter **Safety** on page **90** must be observed.

**Backup power nominal voltage**
When backup power mode is activated, the nominal voltage of the public grid must be selected.

**State of charge warning limit**
A warning is output when the residual capacity of the battery specified here is reached in backup power mode.

**Reserve capacity**
The set value results in a residual capacity (depending on the capacity of the battery) that is reserved for backup power. The battery is not discharged below the residual capacity in grid-connected operation. In backup power mode, the manually set value **"Minimum SoC"** is not taken into account. If there is a power outage, the battery is always discharged down to the automatically preset minimum SoC in accordance with the technical specifications of the battery manufacturer.

**Load management**
Up to 4 pins can be selected for load management here. Additional load management settings are available in the "**Load management**" menu item.
Default: Pin 1

**Australia - Demand Response Mode (DRM)**
The pins for control via DRM can be set here:

| Mode | Description | Information | DRM pin | I/O pin |
|---|---|---|---|---|
| DRM0 | Inverter disconnects itself from the grid | DRM0 occurs if there is an interruption or short circuit on the REF GEN or COM LOAD leads, or if the combinations DRM1 - DRM8 are invalid.<br>The mains relays open. | REF GEN<br>COM LOAD | IO4<br>IO5 |
| DRM1 | Import $P_{nom} \leq 0\%$ without disconnection from the grid | currently not supported | DRM 1/5 | IN6 |
| DRM2 | Import $P_{nom} \leq 50\%$ | currently not supported | DRM 2/6 | IN7 |
| DRM3 | Import $P_{nom} \leq 75\%$<br>&<br>$+Q_{rel}^{*} \geq 0\%$ | currently not supported | DRM 3/7 | IN8 |
| DRM4 | Import $P_{nom} \leq 100\%$ | currently not supported | DRM 4/8 | IN9 |

| Mode | Description | Information | DRM pin | I/O pin |
|---|---|---|---|---|
| DRM5 | Export $P_{nom}$ ≤ 0% without disconnection from the grid | currently not supported | DRM 1/5 | IN6 |
| DRM6 | Export $P_{nom}$ ≤ 50% | currently not supported | DRM 2/6 | IN7 |
| DRM7 | Export $P_{nom}$ ≤ 75% & $-Q_{rel}$* ≥ 0% | currently not supported | DRM 3/7 | IN8 |
| DRM8 | Export $P_{nom}$ ≤ 100% | currently not supported | DRM 4/8 | IN9 |

The percentages always refer to the nominal device output.

**IMPORTANT!**
If the Demand Response Mode (DRM) function is enabled and no DRM control is connected, the inverter switches to Standby mode.

**Demand Response Modes (DRM)**

Here you can enter a value for the apparent power input and the apparent power output for the Australia country setup.

**Inverter**

**"Enforce Standby"**
When the function is activated, the feed-in mode of the inverter is interrupted. This enables a powerless shutdown of the inverter and protects its components. When the inverter is restarted, the standby function is automatically deactivated.

**"PV 1"** and **"PV 2"**

| Parameter | Value range | Description |
|---|---|---|
| **"Mode"** | Off | The MPP tracker is deactivated. |
| | Auto | The inverter uses the voltage at which the max. possible power of the MPP tracker is possible. |
| | Fix | The MPP tracker uses the voltage defined in the **"UDC fix"**. |
| **"UDC fix"** | 80 - 530 V | The inverter uses the fixed preset voltage used at the MPP tracker. |
| **"Dynamic Peak Manager"** | Off | The function is deactivated. |
| | On | The entire solar module string is checked for optimisation potential and determines the best possible voltage for feed-in mode. |

**"Ripple Control"**
Ripple control signals are signals sent out by the energy company to switch controllable loads on and off. Depending on the installation situation, ripple control

signals may be attenuated or amplified by the inverter. The settings below can be used to counteract this if necessary.

| Parameter | Value range | Description |
|---|---|---|
| **"Reduction of Influence"** | Off | The function is deactivated. |
| | On | The function is activated. |
| **"Frequency of Ripple Control Signal"** | 100 - 3000 Hz | The frequency specified by the energy company must be entered here. |
| **"Grid Inductance"** | 0.00001 - 0.005 H | The value measured at the feed-in point must be entered here. |

**"Measures against RCD/RCMU false triggers"**
(when using a 30 mA residual current circuit breaker)

*NOTE!*

**The national regulations of the grid operator or other factors may require a residual current circuit breaker in the AC connection lead.**
For this situation, a type A residual-current circuit breaker is generally adequate. Nevertheless, false alarms can be triggered for the type A residual-current circuit breaker in individual cases and depending on local conditions. For this reason, in accordance with national legislation, Fronius recommends that a residual-current circuit breaker with a tripping current of at least 100 mA suitable for frequency converters be used.

| Parameter | Value range | Description |
|---|---|---|
| **"Switch-Off before 30mA RCD Trip"** | 0 | No measures to prevent false tripping. |
| | 1 | The inverter switches off at 15 mA before the residual-current circuit breaker trips. |
| **"Leakage current factor to reduce RCMU/RCD false trips" (only for Symo GEN24)** | 0 - 0.25 (default: 0.16) | Reducing the setting value reduces the leakage current and raises the intermediate circuit voltage, which slightly reduces the efficiency. Setting value 0.16 enables optimum efficiency. |

**"Iso Warning"**

| Parameter | Value range | Description |
|---|---|---|
| **"Iso Warning"** | Off | The isolation warning is deactivated. |
| | On | The isolation warning is activated.<br>A warning is issued in the event of an isolation fault. |

| Parameter | Value range | Description |
|---|---|---|
| **"Iso Alternative Mode"** | Accurate | Isolation monitoring is performed with the highest accuracy and the measured insulation resistance is displayed on the user interface of the inverter. |
| | Fast | Isolation monitoring is performed with lower accuracy, which shortens the duration of the isolation measurement, and the isolation value is not displayed on the user interface of the inverter. |
| **"Isolation Warning Threshold"** | 100,000 - 10,000,000 Ω | If this threshold is undershot, status code 1083 is displayed on the user interface of the inverter. |

**"Backup Power"**

| Parameter | Value range | Description |
|---|---|---|
| **"Backup Nominal Voltage"** | 220 - 240 V | Is the nominal phase voltage output in backup power mode. |
| **"Backup Undervoltage Protection Limit U< [pu]"** | 0 - 2 %V | The setting value is used to set the limit value for switching off backup power mode,<br>e. g. setting value 0.9 = 90% of the nominal voltage. |
| **"Backup Undervoltage Protection Time U<"** | 0.04 - 20 s | Triggering time for falling below the backup power undervoltage protection limit value. |
| **"Backup Overvoltage Protection Limit U> [pu]"** | 0 - 2 %V | The setting value is used to set the limit value for switching off backup power mode,<br>e. g. setting value 1.1 = 110% of the nominal voltage. |
| **"Backup Overvoltage Protection Time U>"** | 0.04 - 20 s | Triggering time for exceeding the backup power overvoltage protection limit value. |
| **"Backup Restart Delay"** | 0 - 600 s | Is the waiting time for resumption of backup power mode after a shutdown. |
| **"Backup Restart Attempts"** | 1 - 10 | Is the max. number of automatic restart attempts. When the max. number of automatic restart attempts is reached, the service message 1177 must be acknowledged manually. |
| **"Backup External Frequency Check"** (Italy only) | Off | The function is deactivated |
| | On | For backup power mode (Full Backup) in Italy, the external frequency check must be activated. Before ending backup power mode, the grid frequency is checked. When the grid frequency is in the allowed limit range, the loads are connected to the public grid. |
| **"Backup Short Circuit Trip Time"** | 0.001 - 60 s | If a short circuit occurs in backup power mode, this mode is interrupted within the set time. |

# Energy management

**Maximum permitted battery charging from the public grid**

New rules for charging batteries will apply in Germany from 1 January 2024. The maximum charging power from public grids is 4.2 kW when controlled in accordance with Section 14a of the EnWG (Law on the Fuel and Electricity Industries). The inverter must establish a connection to Solar.web for documentation purposes and be permanently connected to the internet in order to be able to prove the implementation of the external control commands.
The charging power is limited to a value below this by default. Make sure not to use more than the allowed 4.2 kW charging power.

**Energy management**

**"Self-Consumption Optimization"**
Set the operating mode to **"Manual"** or **"Automatic"**. The inverter always regulates to the set **"Target Value at Feed-In Point"**. In the **"Automatic"** operating mode (factory setting), an adjustment is made to 0 W at the feed-in point (maximum self-consumption).

The "Target Value at Feed-In Point" also applies if a further source feeds into this Smart Meter. However, in this case:
- The Fronius Smart Meter must be installed and configured at the feed-in point.
- The **"Allow battery charging from additional producers in home network"** function must be activated in the **"Components"** → **"Battery"** menu area.

**"Target Value at Feed-In Point"**
If "Manual" has been selected under Self-Consumption Optimization, the **"Operating Mode"** (**"Consumption"**/**"Feed-In"**) and the **"Target Value at Feed-In Point"** can be set.

**IMPORTANT!**
**"Self-Consumption Optimization"** has lower priority than **"Battery Management"**.

---

**External producers** (only possible with active battery)
If further decentralised producers are installed in the house, and these are incorporated into the self-consumption control of the Fronius Hybrid inverter, the setting **"Allow battery charging from additional producers in home network"** must be activated in the menu area **"Device Configuration"** → **"Components"** (see **Components** on page **108**
.This means that energy can be drawn from the home network and fed into the battery via the Fronius inverter (battery support required). You can restrict how much power is consumed by the Fronius inverter by specifying the maximum AC power (AC max.). A maximum power consumption of the AC rated power of the Fronius inverter is possible.

---

**"Battery Management"**
Using the time-dependent battery control, it is possible to prevent or restrict charging/discharging of the battery and to specify a defined charging power.

Battery management is influenced by the following settings, for example:
- Permitted battery charging from the public grid
- Power limitation of the inverter, energy storage device or overall system
- Control specifications via Modbus
- Self-consumption optimization

**IMPORTANT!**
The defined rules for battery control have the second lowest priority after Self-

Consumption Optimization. Depending on the configuration, the rules may not be satisfied due to other settings.

The following values can be selected for the rules of the time-dependent battery control:

- **"Max. charging power"**
  The battery is charged to the maximum level with the value set in the "**Power**" input field.
  If no feed-in to the public grid and/or direct consumption in the house is possible, the set "**Max. charging power**" value is ignored and the energy generated is charged into the battery.
- **"Min charging power"**
  The battery is charged as a minimum by the value set in the input field "**Power**".
- **"Max discharge power"**
  The battery is discharged at most by the value set in the input field "**Power**".
- **"Min discharge power"**
  The battery is discharged as a minimum by the value set in the input field "**Power**".

The timing for when the rule applies is set in the **"Time"** input fields and by selecting the relevant "**Weekdays**".

It is not possible to define a time window over midnight (00:00).
**Example:** To set a control from 22:00 to 06:00, two inputs are required: "22:00 - 23:59" and "00:00 - 06:00".

## Examples - Time-dependent battery control

The examples below serve to explain the energy flows. Efficiency levels are not taken into account.

| Example: Battery system | |
|---|---|
| PV system available power | 1000 W |
| Power into the battery | 500 W |
| Power output (AC) of the inverter | 500 W |
| Target value set at feed-in point | 0 W |
| Infeed into the public grid | 0 W |
| Consumption in home | 500 W |

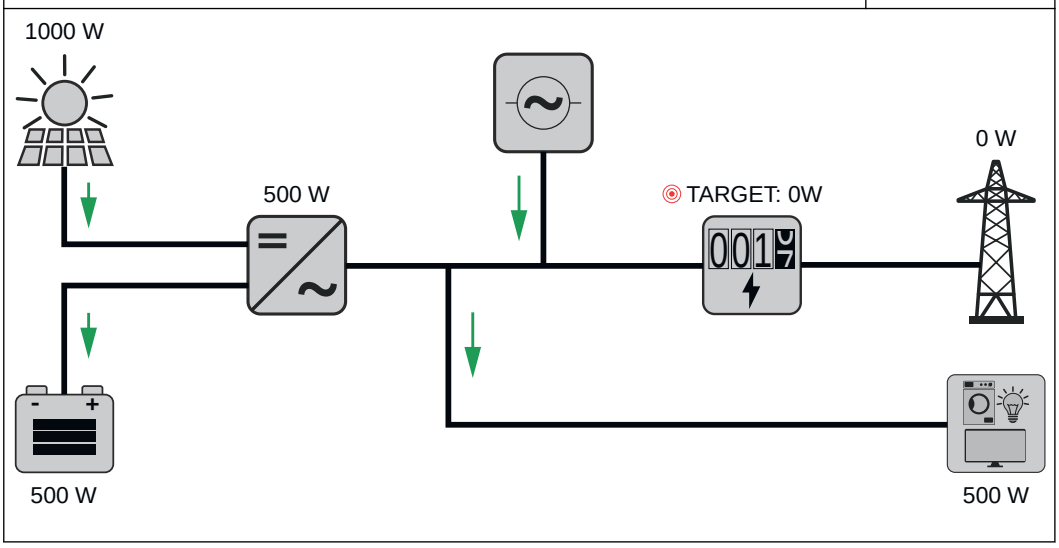

| Example: Battery system without photovoltaics, including second producer in the house | |
|---|---|
| Power into the battery | 1500 W |
| Power consumption (AC) of the inverter | 1500 W |
| Second producer in home network | 2000 W |
| Target value set at feed-in point | 0 W |
| Infeed into the public grid | 0 W |
| Consumption in home | 500 W |

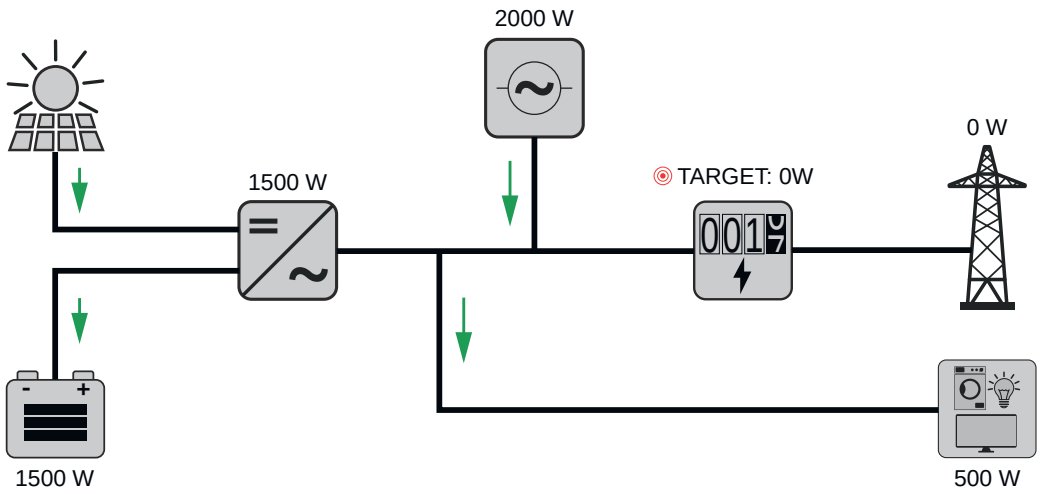


| Example: Battery system including second producer in the house | |
|---|---|
| PV system available power | 1000 W |
| Power into the battery | 2500 W |
| Power consumption (AC) of the inverter | 1500 W |
| Second producer in home network | 2000 W |
| Target value set at feed-in point | 0 W |
| Infeed into the public grid | 0 W |
| Consumption in home | 500 W |

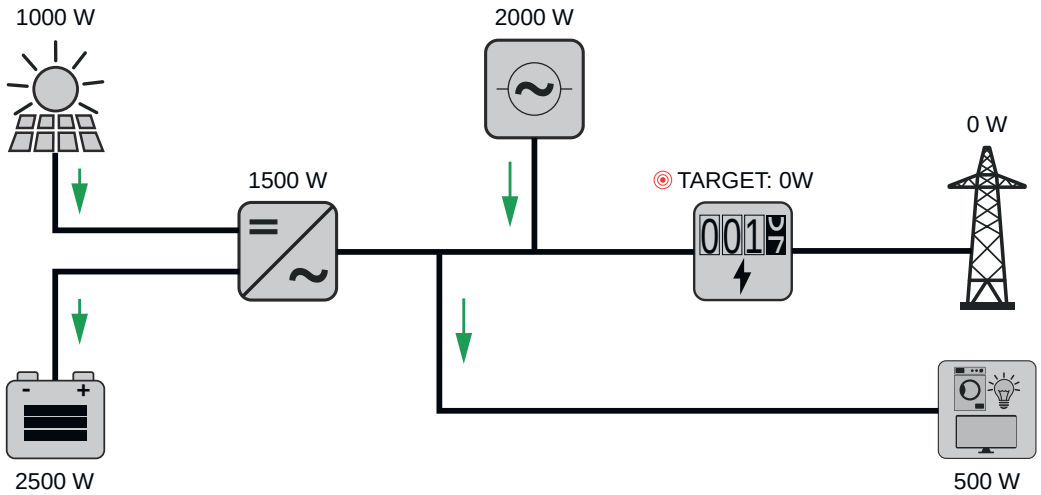

| Example: Battery system including second producer in the house (with AC max. limitation) | |
|---|---|
| PV system available power | 1000 W |
| Power into the battery | 2000 W |
| Power consumption AC max. limited to | 1000 W |
| Power consumption (AC) of the inverter | 1000 W |
| Second producer in home network | 2000 W |
| Target value set at feed-in point | 0 W |
| Infeed into the public grid | 500 W |
| Consumption in home | 500 W |

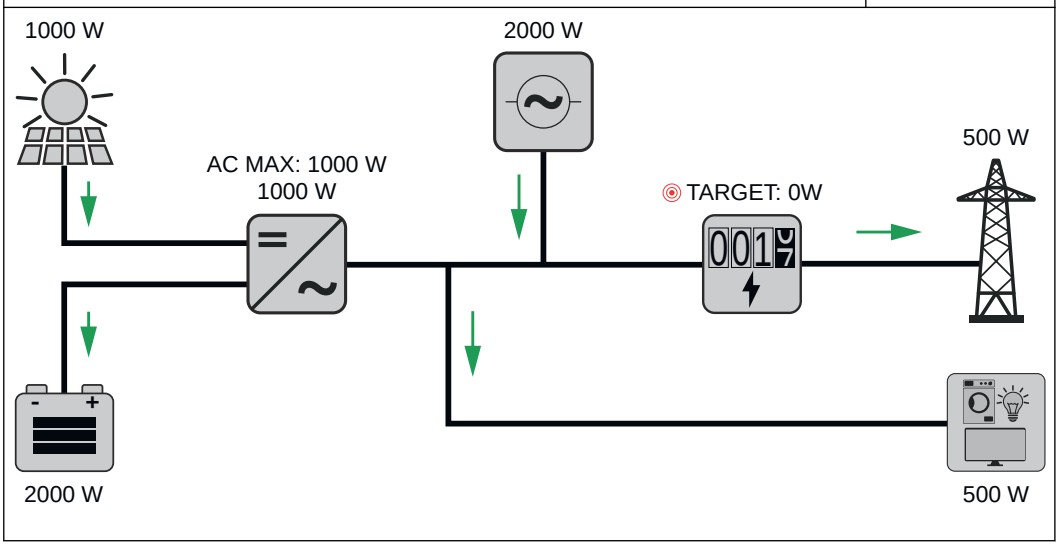


**Allowed battery control rules**

A rule always consists of a restriction or parameter and the time control **"Time"** and **"Weekdays"** while the rule is active. Rules with the same restriction (e.g. max. charging power) must not overlap in time.

**Max. charging and discharging limits**
The max. charging/max. discharging power can be configured at the same time.

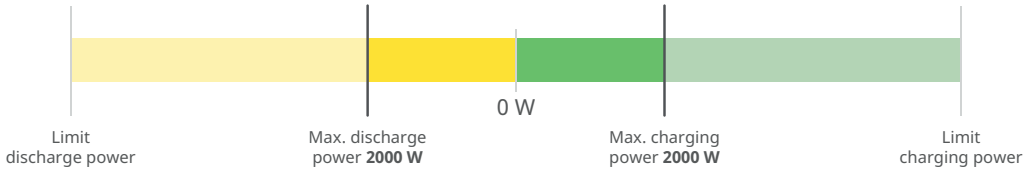


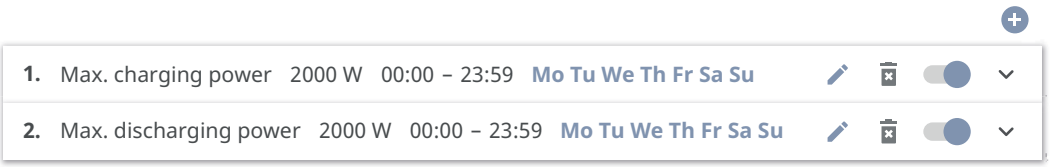

**Specifying the charging range**
It is possible to define a charging range with a min. and max. charging limit. In this case, it is not possible for the battery to discharge.

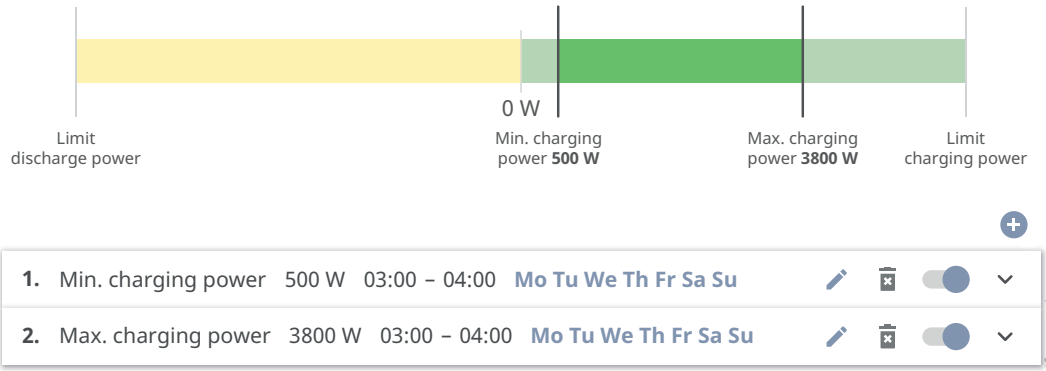


**Specifying the discharging range**
It is possible to define a discharging range with a min. and max. discharging limit. In this case, it is not possible for the battery to charge.

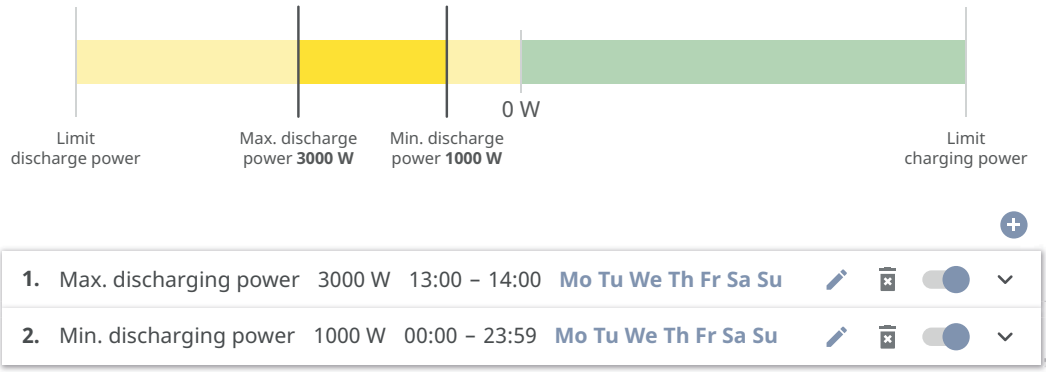


**Specifying a defined charging power**
A defined charging power can be specified by setting the min. and max. charging power to the same value.

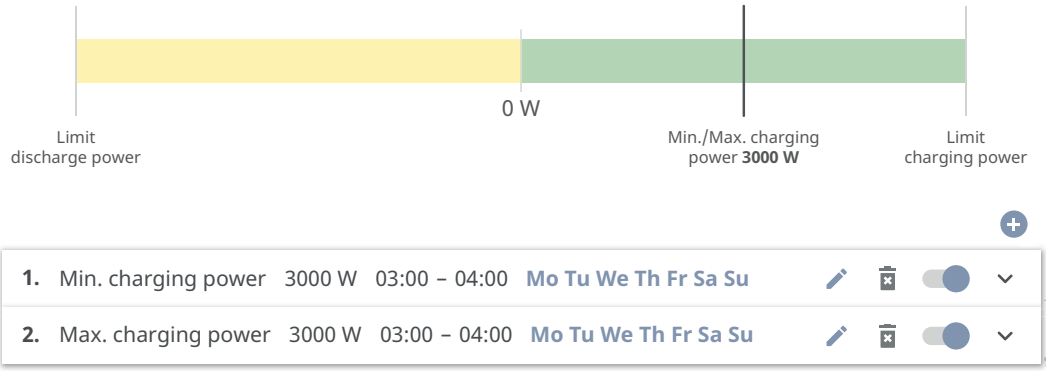

**Specifying a defined discharging power**
A defined discharging power can be specified by setting the min. and max. discharging power to the same value.

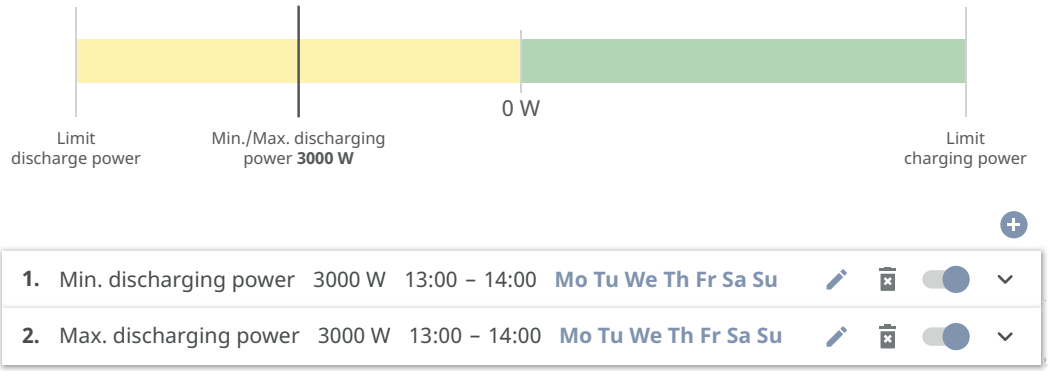


**Possible applications**
- Time-dependent electricity tariffs
- Battery reservation for market-specific power limitation
- Time-dependent storage reservation for a backup power situation

## PV power reduction

The rules in the "Battery Management" menu area enable optimum use of the energy generated. Situations may arise, however, in which PV power cannot be used in full due to the time-dependent battery control.

| Example | |
|---|---|
| Fronius inverter (max. output power) | 6000 W |
| Defined battery discharging | 6000 W |
| PV power | 1000 W |

In this case, the inverter would have to reduce the PV power to 0 W, since the output power of the inverter is max. 6000 W and this is already being used to capacity by the battery discharging.

Since it doesn't make sense to waste PV power, the power limit is automatically adjusted in Battery Management such that no PV power is wasted. In the example above, this means that the battery is discharged only at 5000 W, so that the 1000 W PV power can be used.

## Load management

**"Priorities"**
If additional components (e.g. battery, Fronius Ohmpilot) are present in the system, the priorities can be set here. Devices having higher priority are actuated first, and subsequently, if there is still excess energy available, the other devices.

**IMPORTANT!**
If there is a Fronius Wattpilot in the photovoltaic system, it is seen as a load. The priority for the load management of the Wattpilot must be configured in the Fronius Solar.Wattpilot app.

**"Rules"**
It is possible for up to four different load management rules to be defined. At the same threshold values, the rules are activated in succession. For deactivation, this is done in reverse; the I/O last switched on is the first to be switched

off. In the case of different thresholds, the I/O with the lowest threshold is switched on first, followed by the second lowest, and so on.

I/Os controlled by the produced power are always prioritised over a battery and Fronius Ohmpilot. That is to say that an I/O can switch on and result in the battery no longer being charged or the Fronius Ohmpilot no longer being activated.

**IMPORTANT!**
An I/O is activated/deactivated only after 60 seconds.

**"Load"**
- Control is **"Off"** (disabled).
- Control is effected by the **"Power Production"**.
- Control is effected by **"Power Surplus"** (given feed limits). This option can only be selected if a meter has been connected. Control is effected using the actual power of feeding in with respect to the grid.

**"Thresholds"**
- **"On"**: For entering an effective power limit, at which the output is activated.
- **"Off"**: For entering an effective power limit, at which the output is deactivated.

**"Duration"**
- Field for enabling **"Minimum duration per on-signal"**, a minimum duration for which the output is to be activated for each switch-on process.
- Field for activating the **"Maximum duration per day"**.
- Field for enabling a **"Desired duration"** for which the output is to be activated in total per day (total of several switch-on processes).

# System

**General**

**General settings**

1. In the **"System name"** input field, enter the name of the system (max. 30 characters).
2. **"Synchronize time automatically"** enabled → select "Area time zone" and "Location time zone". The date and time are applied from the time zone entered.

2. **"Synchronize time automatically"** disabled → enter or select "Date", "Time", "Area time zone" and "Location time zone".
3. Click on the **"Save"** button.

**Update**

All available updates are made available on the product page and in the "Download search" area under **www.fronius.com** .

**Firmware update**

1. Drag the firmware file into the "Drag&Drop file here" field or select it using "Select file".

The update will start.

**Setup wizard**

The guided setup wizard can be accessed here.

**Restoring the factory settings**

**All settings**
All configuration data is reset with the exception of the country setup. Changes to the country setup may only be carried out by authorized personnel.

**All settings with no network**
All configuration data is reset with the exception of the country setup and the network settings. Changes to the country setup may only be carried out by authorized personnel.

**Event Log**

**Current Messages**
All current events of the connected system components are shown here.

**IMPORTANT!**
Depending on the type of event, these must be confirmed via the "tick" button in order to be processed further.

**History**
All events of the connected system components that no longer exist are shown here.

**Information**

This menu displays all system information and the current settings.

**Save as PDF**

1. Click on the "Save as PDF" button.
2. Individually select information with the "tick" next to the information or tick to "Select all".
3. Enter the file name in the input field and click on the "Save" button.

The PDF is created and displayed.

---

**License Manager**

The licence file contains the performance data and the scope of functions of the inverter. When replacing the inverter, power stage set or data communication area, the licence file must also be replaced.

**Licensing - online (recommended):**
An Internet connection and completed configuration on Solar.web is required.

1. Complete the installation work (see chapter **Closing the inverter's connection area/housing cover, and commissioning** on page **101**).
2. Connect to the user interface of the inverter.
3. Enter the serial number and verification code (VCode) of the defective and replacement unit. The serial number and the VCode can be found on the rating plate of the inverter (see chapter **Warning notices on the device** on page **57**).
4. Click on the **"Start online licensing"** button.
5. Skip the Terms of use and Network settings menu items by clicking on **"Next"**.

The licence activation starts.

**Licensing - offline:**
There must be no Internet connection for this. When licensing offline with an established internet connection, the licence file is automatically uploaded to the inverter. Therefore, when uploading the licence file, the following error occurs: "The licence has already been installed and the wizard can be closed".

1. Complete the installation work (see chapter **Closing the inverter's connection area/housing cover, and commissioning** on page **101**).
2. Connect to the user interface of the inverter.
3. Enter the serial number and verification code (VCode) of the defective and replacement unit. The serial number and the VCode can be found on the rating plate of the inverter (see chapter **Warning notices on the device** on page **57**).
4. Click on the **"Start offline licensing"** button.
5. Download the service file onto the end device by clicking on the **"Download service file"** button.
6. Open the website **licensemanager.solarweb.com** and log in with your user name and password.
7. Drag or upload the service file into the **"Drop service file here or click to upload"** field.
8. Download the newly generated licence file onto the end device using the **"Download license file"** button.
9. Go to the user interface of the inverter and drag the licence file into the "Drag & drop license file here" field, or select it via "Choose license file".

The licence activation starts.

**Support**

**Enable Support User**

1 Click the **"Enable Support User"** button.

The support user is enabled.

**IMPORTANT!**
The support user only allows Fronius Technical Support to implement settings on the inverter via a secure connection. The button **"Terminate Support User Session"** deactivates the access.

---

**Generate support info** (for Fronius Support team)

1 Click on the **"Generate support info"** button.

2 The sdp.cry file is downloaded automatically. To download manually, click on the **"Download Support-Info"** button.

The sdp.cry file is saved in the downloads.

---

**Activate Remote Access**

1 Click on the **"Activate Remote Access"** button.

Remote maintenance access for the Fronius Support team is enabled.

**IMPORTANT!**
Remote maintenance access gives Fronius Technical Support exclusive access to the inverter via a secure connection. Diagnostic data is transmitted here that can be used for troubleshooting purposes. Only enable remote maintenance access following a request from the Fronius Support team.

# Communication

**Network**

**Server addresses for data transfer**
If a firewall is used for outgoing connections, the following protocols, server addresses and ports must be allowed for successful data transfer:
- Tcp fronius-se-iot.azure-devices.net:8883
- Tcp fronius-se-iot-telemetry.azure-devices.net:8883
- Tcp fronius-se-iot-telemetry.azure-devices.net:443
- Udp sera-gen24.fronius.com:1194 (213.33.117.120:1194)
- Tcp cure-se.fronius.com:443
- Tcp firmware-download.fronius.com:443
- Tcp froniusseiot.blob.core.windows.net:443
- Tcp provisioning.solarweb.com:443
- Upd/Tcp 0.time.fronius.com:123

When using FRITZ!Box products, the Internet access must be configured to be unlimited and unrestricted. The DHCP Lease Time (validity) must not be set to 0 (=infinite).

**LAN**:

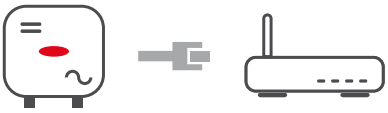

**Establishing a connection:**

1. Enter host name.
2. Select connection type **"automatic"** or **"static"**.
3. For connection type **"static"**: enter IP address, subnet mask, DNS and gateway.
4. Click on the **"Connect"** button.

✓ *The connection is established.*

After connecting, the status of the connection should be checked (see "**Internet Services**" on page **126**).

**WLAN**:

**Establishing a connection via WPS:**

☐ The access point of the inverter must be active. It is opened by touching the sensor → communication LED flashes blue.

1. Establish the connection to the inverter in the network settings (the inverter is displayed with the name "FRONIUS_" and the serial number of the device).
2. Enter the password from the rating plate and confirm.
   **IMPORTANT!**
   To enter the password on a Windows 10 operating system, the link "Connect using a security key instead" must first be activated to establish a connection with the password.
3. In the browser address bar, enter and confirm the IP address 192.168.250.181.

4 In **Network Settings**, click on the "**Enable**" button under **WLAN - WPS**.

5 Activate WPS on the WLAN router (see documentation provided with the WLAN router).

6 Click the **"Start"** button. The connection is established automatically.

7 Log in to the user interface of the inverter.

8 Check network details and Fronius Solar.web connection

After connecting, the status of the connection should be checked (see "**Internet Services**" on page **126**).

**Select and connect WLAN network:**

The networks found are shown in the list. Clicking on the refresh button ⟳ will carry out a second search of the available WLAN networks. The **"Find network"** input field can be used to further restrict the selection list.

1 Select network from the list.

2 Select connection type **"automatic"** or **"static"**.

3 For connection type **"automatic"**: enter WLAN password and host name.

4 For connection type **"static"**: enter IP address, subnet mask, DNS and gateway.

5 Click on the **"Connect"** button.

✓ *The connection is established.*

After connecting, the status of the connection should be checked (see "**Internet Services**" on page **126**).

**Access point:**

The inverter serves as an access point. A PC or smart device connects directly to the inverter. It is not possible to connect to the internet. The **"Network name (SSID)"** and **"Network key (PSK)"** can be assigned in this menu.
It is possible to operate a connection via WLAN and via access point simultaneously.

## Modbus

**Modbus RTU interface 0 / 1**

If one of the two Modbus RTU interfaces is set to Slave, the following input fields are available:

| | |
|---|---|
| **Baud rate** | The baud rate influences the transmission speed between the individual components connected in the system. When selecting the baud rate, ensure that it is the same at both the sending and receiving end. |
| **Parity** | The parity bit can be used to check the parity. It detects transmission errors. A parity bit can safeguard a specific number of bits. The value (0 or 1) of the parity bit must be calculated by the sender and is checked by the recipient using the same calculation. The parity bit can be calculated for even and odd parity. |

**SunSpec Model Type**
Depending on the SunSpec model, there are two different settings.

**float:** SunSpec Inverter Model 111, 112, 113 or 211, 212, 213.
**int + SF:** SunSpec Inverter Model 101, 102, 103 or 201, 202, 203.

**Meter address**

The value entered is the identification number (Unit ID) assigned to the meter.Can be found on the user interface of the inverter in the **Communication** → **Modbus** menu.
Factory setting: 200

**Meter address**
The value entered is the identification number (Unit ID) assigned to the meter.
Can be found on the user interface of the inverter in the **Communication** → **Modbus** menu.
Factory setting: 1

**Slave as Modbus TCP**

This setting is necessary to enable inverter control via Modbus. If the function **Slave as Modbus TCP** is activated, the following input fields are available:

**Modbus port**
Number of the TCP port that is to be used for Modbus communication.

**SunSpec Model Type**
Depending on the SunSpec model, there are two different settings.

**float:** SunSpec Inverter Model 111, 112, 113 or 211, 212, 213.
**int + SF:** SunSpec Inverter Model 101, 102, 103 or 201, 202, 203.

**Meter address**
The value entered is the identification number (Unit ID) assigned to the meter.Can be found on the user interface of the inverter in the **Communication** → **Modbus** menu.
Factory setting: 200

**Inverter address**
The value entered is the identification number (Unit ID) assigned to the inverter. Can be found on the user interface of the inverter in the **Communication** → **Modbus** menu.
Factory setting: This value is invariably defined as 1.

**Inverter control via Modbus**

If this option is activated, the inverter is controlled via Modbus.
Inverter control includes the following functions:
- on/off
- Power reduction
- Specification of a constant power factor (cos phi)
- Specification of a constant reactive power value
- Battery control specifications with battery

**Restrict Control**
An IP address can be entered here, which is the only one authorised to control the inverter.

**Remote control**

**Remote control** and **Profiles**
The grid operator/energy supplier can influence the output power of the inverter by means of remote control. The prerequisite for this is for the inverter to have an active internet connection.

| Parameter | Value range | Description |
|---|---|---|
| **Remote control** | Off | Remote control of the inverter is deactivated. |
| | On | Remote control of the inverter is activated. |
| **Allow remote control for regulatory purposes (Technician)** | Deactivated/ Activated | The function **Allow remote control for regulatory purposes** may be mandatory for proper operation of the system. *) |
| **Allow remote control for Virtual Power Plants (Customer)** | Deactivated/ Activated | If the **Allow remote control for regulatory purposes** function is enabled (technician access required), the **Allow remote control for Virtual Power Plants** function is automatically enabled and cannot be disabled. *) |

***) Cloud Control**
A virtual power plant is an interconnection of several power plant operators to form a network. This network can be controlled via the cloud over the internet. The inverter must have an active internet connection for this. System data is transmitted.

**Fronius Solar API**

The Fronius Solar API is an IP-based, open JSON interface. When enabled, IOT devices on the local network can access inverter information without authentication. For security reasons, the interface is deactivated at the factory and must be activated if it is required for a third-party application (e.g. EV charger, smart home solutions, etc.) or the Fronius Wattpilot.

For monitoring, Fronius recommends using Fronius Solar.web, which provides secure access to inverter status and production information.

When performing a firmware update to version 1.14.x, the setting of the Fronius Solar API is adopted. The Solar API is activated for systems with a version below 1.14.x. Above this version it is deactivated but can be switched on and off in the menu.

**Activate the Fronius Solar API**
Enable the **"Activate communication via Solar API"** function on the user interface of the inverter in the **"Communication"** → **"Solar API"**menu.

**Internet Services**

This menu displays information about the connections and the current connection status. In case of problems with the connection, a short error description is shown.

# Safety and grid requirements

## Country setup

**⚠ WARNING!**

**Danger due to unauthorised error analyses and repair work.**
This can result in serious injury and damage to property.
- ▶ Fault analyses and repair work on the photovoltaic system may only be carried out by installers/service technicians from authorised specialist companies in accordance with national standards and guidelines.

*NOTE!*

**Risk due to unauthorised access.**
Incorrectly set parameters can negatively influence the public grid and/or the inverter feeding energy into the grid, and lead to a loss of conformity with the standard.
- ▶ The parameters may only be adjusted by installers/service technicians from authorised specialist companies.
- ▶ Do not give the access code to third parties and/or unauthorised persons.

*NOTE!*

**Risk due to incorrectly set parameters.**
Incorrectly set parameters can negatively influence the public grid and/or cause faults and failures on the inverter, and lead to the loss of conformity with the standard.
- ▶ The parameters may only be adjusted by installers/service technicians from authorised specialist companies.
- ▶ The parameters may only be adjusted if the energy provider permits or requires this.
- ▶ Only adjust the parameters taking into account the nationally applicable standards and/or directives and the specifications of the energy provider.

The "Country Setup" menu area is intended exclusively for installers/service technicians from authorised specialist companies. To request the access code required for this menu area, see chapter **Requesting inverter codes in Solar.SOS**.

The selected country setup for the respective country contains preset parameters according to the nationally applicable standards and requirements. Depending on local grid conditions and the specifications of the energy provider, adjustments to the selected country setup may be necessary.

## Requesting inverter codes in Solar.SOS

The "Country Setup" menu area is intended exclusively for installers/service technicians from authorised specialist companies. The inverter access code required for this menu area can be requested in the Fronius Solar.SOS portal.

Requesting inverter codes in Solar.SOS:

1. Go to **solar-sos.fronius.com** in a browser
2. Log in with your Fronius account
3. On the top right, click on the drop-down menu 👤

4 Select the menu item **Show inverter codes**

✓ *A contract page appears on which the request for the access code to change the grid parameters for Fronius inverters is located*

5 Accept the Terms of use by checking **Yes, I have read and agree to the terms of use** and click **Confirm & Save**

6 After that, the codes can be retrieved in the drop-down menu at the top right under **Show inverter codes**

⚠ **CAUTION!**

**Risk due to unauthorised access.**
Incorrectly set parameters can negatively influence the public grid and/or the inverter feeding energy into the grid, and lead to a loss of conformity with the standard.

▶ The parameters may only be adjusted by installers/service technicians from authorised specialist companies.

▶ Do not give the access code to third parties and/or unauthorised persons.

**Feed-in limitation**

Energy companies or grid operators may stipulate feed-in limitations for an inverter (e.g. max. 70% of kWp or max. 5 kW).
The feed-in limitation takes account of self-consumption by the household before the power of an inverter is reduced:

- A custom limit can be set.
- A Fronius Smart Meter can be connected to the Modbus push-in terminal of the data communication area at the M0/M1- / M0/M1+ connections for Modbus data.

With the inverter, any PV power that is not allowed to be fed into the public grid is used to charge the battery instead and/or used by the Fronius Ohmpilot so that it does not go to waste. The feed-in limitation is only active if the power fed in is higher than the set power reduction.

**"Power limitation"** deactivated
The inverter converts the entire available PV power and feeds it into the public grid.

**"Power limitation"** activated
The entire PV system is restricted to a set power limit. The value of the total permissible feed-in power must be set.

**"Total DC system power"**
Input field for the total DC system power in Wp.
This value is used if the **"Maximum permitted feed-in power of the entire system"** is specified in %.

**"Soft Limit"**
If this value is exceeded, the inverter will regulate down to the set value within the time required by national standards and regulations.

**"Hard Limit"**
If this value is exceeded, the inverter switches off within max. five seconds. This value must be higher than the value set for **"Soft Limit"**.

**"Maximum permitted feed-in power of the entire system"**
Input field for the "Maximum permitted feed-in power of the entire system" in W or % (setting range: -10 to 100 %).

If there is no meter in the system or if a meter has failed, the inverter limits the feed-in power to the set value.

| **Example: Feed-in limitation (without consideration of the efficiency)** | |
|---|---|
| PV system on Fronius inverter: | 5,000 W |
| Consumption in home: | 1,000 W |
| Maximum permitted feed-in power of the entire system: | 60 % = 3,000 W |
| | |
| **Case 1: The battery can be charged** | |
| Power at grid feed-in point: | 0 W |
| Power at inverter output: | 1,000 W |
| Power into the battery: | 3,000 W |
| | |
| **Case 2: The battery cannot be charged** | |
| Power at grid feed-in point | 3,000 W |
| Power at inverter output: | 4,000 W |
| Power into the battery: | 0 W |
| In this example, no more than 3,000 W may be fed into the grid at the grid feed-in point. However, any loads that are located between the inverter and the grid feed-in point can be supplied by additional power from the inverter. These loads are also compensated as required. | |

**Dynamic power regulation with several inverters**

**Example 1: Fronius SnapINverter ≤ Fronius Primo GEN24**
Only one primary meter is required for the Fronius Primo GEN24 inverter.

The power values shown are an example. Inverter configurations with power values other than those shown in the example are possible, taking into account the criteria for this example.

**IMPORTANT!**
Zero feed-in is not possible when using 2 inverters.

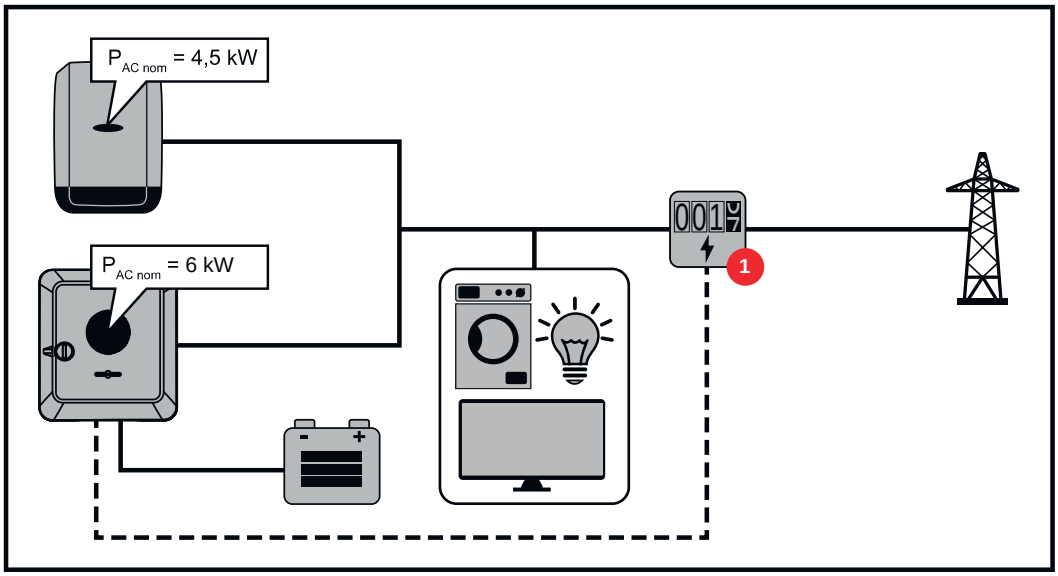


**Settings on the user interface of the Fronius Primo GEN24 inverter:**

1. Configure the primary meter at the feed-in point in the **"Device configuration"** → **"Components"** menu.
2. Activate the limit for the entire system in the **"Safety and grid regulations"** → **"Export limitation"** menu. Enter the DC rated power of the entire PV system in the **"Total DC system power"** input field. Enter the percentage value (50%, 60% or 70%) in the **"Maximum permitted feed-in power of the entire system"** input field.

---

**Example 2a: Fronius SnapINverter > Fronius Primo GEN24**
Two primary meters are required for the inverters.

The power values shown are an example. Inverter configurations with power values other than those shown in the example are possible, taking into account the criteria for this example.

**IMPORTANT!**
With two primary meters at the feed-in point without a secondary meter, Fronius SnapINverter and Fronius Primo GEN24 inverters cannot be displayed as a combined PV system in Solar.web. Two individual PV systems must be created in Solar.web.

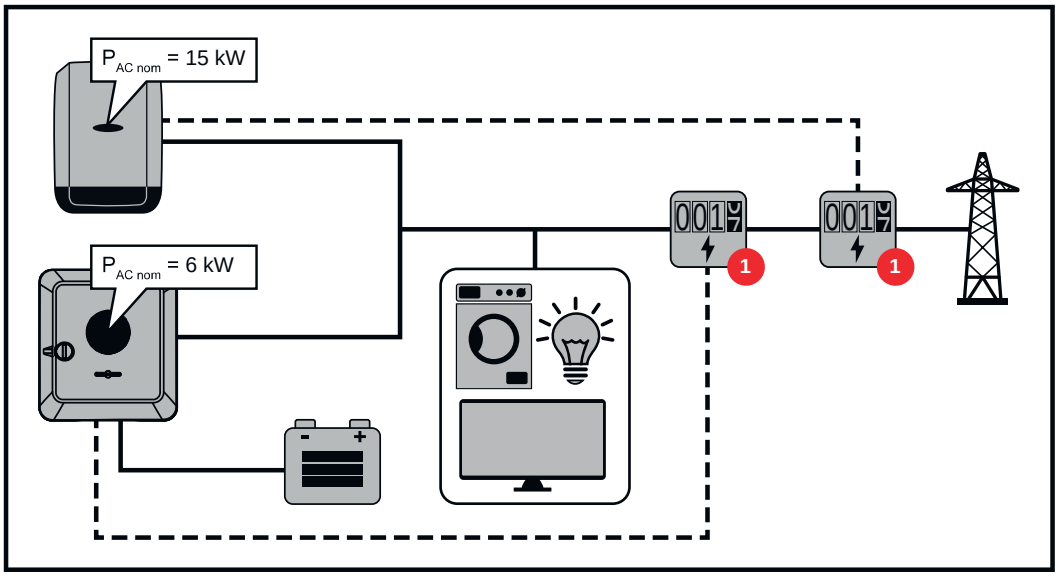


**Settings on the user interface of the Fronius Primo GEN24 inverter:**

1 Configure the primary meter at the feed-in point in the **"Device configuration"** → **"Components"** menu.

**Settings in the system monitoring of the Fronius SnapInverter:**

1 Configure the primary meter at the feed-in point in the **"Settings "** → **"Meter"** menu.

2 Activate the limit for the entire system in the **"DNO Editor"** → **"Dynamic power reduction"** menu. Enter the DC rated power of the entire PV system in the **"Total DC system power"** input field. Enter the percentage value (50%, 60% or 70%) in the **"Max. grid feed-in power"** input field.

---

**Example 2b: Fronius SnapINverter > Fronius Primo GEN24**
Two primary meters and one secondary meter are required for the inverters.

The power values shown are an example. Inverter configurations with power values other than those shown in the example are possible, taking into account the criteria for this example.

**IMPORTANT!**
In order to be able to record all PV system data in Solar.web in full, only the Fronius Primo GEN24 inverter may be created in this PV system. The Fronius SnapINverter data is transmitted from the secondary meter to the Fronius Primo GEN24 inverter and thus displayed in Solar.web.
We recommend that you set up the Fronius SnapINverter as a separate additional PV system in Solar.web for servicing and maintenance work (e.g. status codes, online updates, etc.).

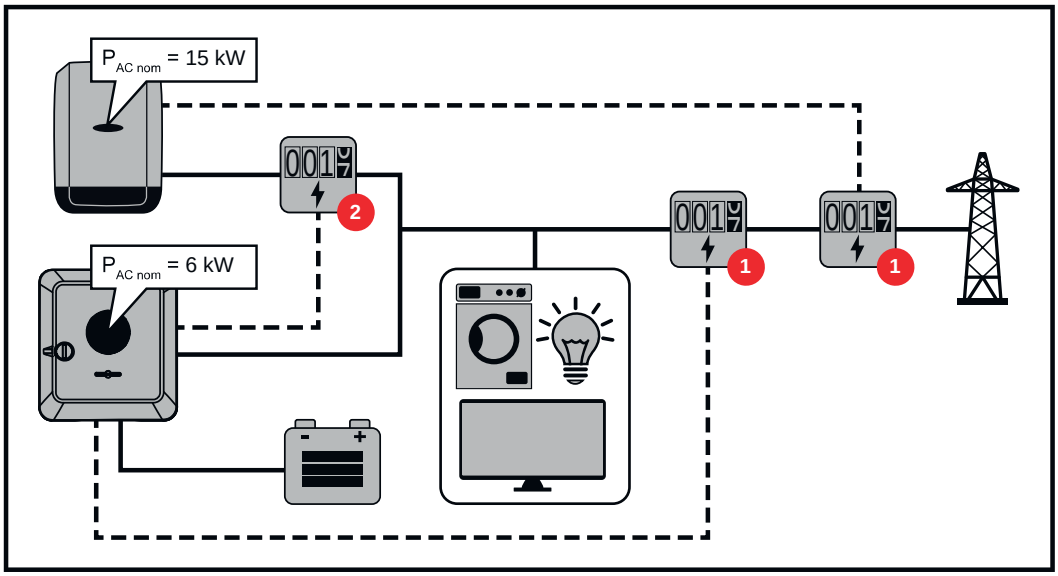


**Settings on the user interface of the Fronius Primo GEN24 inverter:**

1. Configure the primary meter at the feed-in point in the **"Device configuration"** → **"Components"** menu.
2. Configure the secondary meter in the **"Device configuration"** → **"Components"** menu.

**Settings in the system monitoring of the Fronius SnapInverter:**

1. Configure the primary meter at the feed-in point in the **"Settings "** → **"Meter"** menu.
2. Activate the limit for the entire system in the **"DNO Editor"** → **"Dynamic power reduction"** menu. Enter the DC rated power of the entire PV system in the **"Total DC system power"** input field. Enter the percentage value (50%, 60% or 70%) in the **"Max. grid feed-in power"** input field.

---

**I/O power management**

**General**
In this menu item, settings relevant for a distribution network operator (DNO) are made. An effective power limitation in % and/or a power factor limitation can be set.

**IMPORTANT!**
Select the **"Technician"** user for settings in this menu item, enter and the password for the **"Technician"** user and confirm. Settings in this menu area must only be made by trained and qualified personnel.

"**Input pattern**" (assignment of individual I/Os)
1 click = white (contact open)
2 clicks = blue (contact closed)
3 clicks = grey (not used)

"**Power factor (cos φ)**"
"**ind**" = inductive
"**cap**" = capacitive

"**DNO feedback**"
When the rule is enabled, output **"DNO feedback"** (pin 1 recommended) must be configured (e.g. for operating a signalling device).

For "**Import**" or "**Export**", the data format *.fpc is supported.

**Control priorities**
For setting the control priorities for the ripple control signal receiver, the export limitation and control via Modbus.

1 = highest priority, 3 = lowest priority

---

**Connection diagram - 4 relay**

The ripple control signal receiver and the I/Os terminal of the inverter can be connected to one another in accordance with the connection diagram.
If the distance between the inverter and the ripple control signal receiver exceeds 10 m, at least a CAT 5 cable is recommended and the shield must be connected at one end to the push-in terminal of the data communication area (SHIELD).

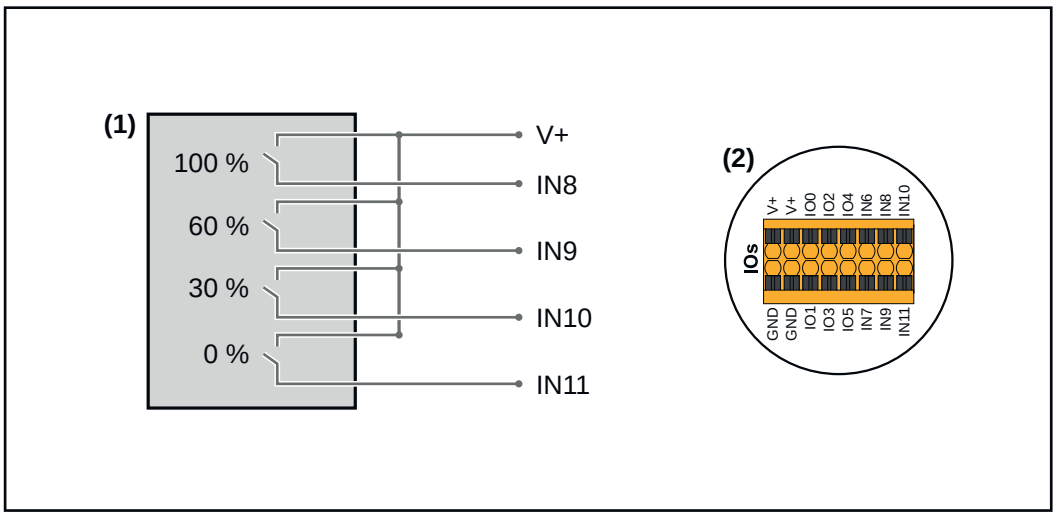


(1) Ripple control signal receiver with 4 relays, for effective power limiting.
(2) I/Os of the data communication area.

**Use the preconfigured file for 4-relay mode:**

1. Download the file (.fpc) **under 4-relay mode** onto the end device.
2. Upload the file (.fpc) in the **"I/O Power Management"** menu using the **"Import"** button.
3. Click on the **"Save"** button.

The settings for 4-relay mode are stored.

## I/O power management settings - 4 relays

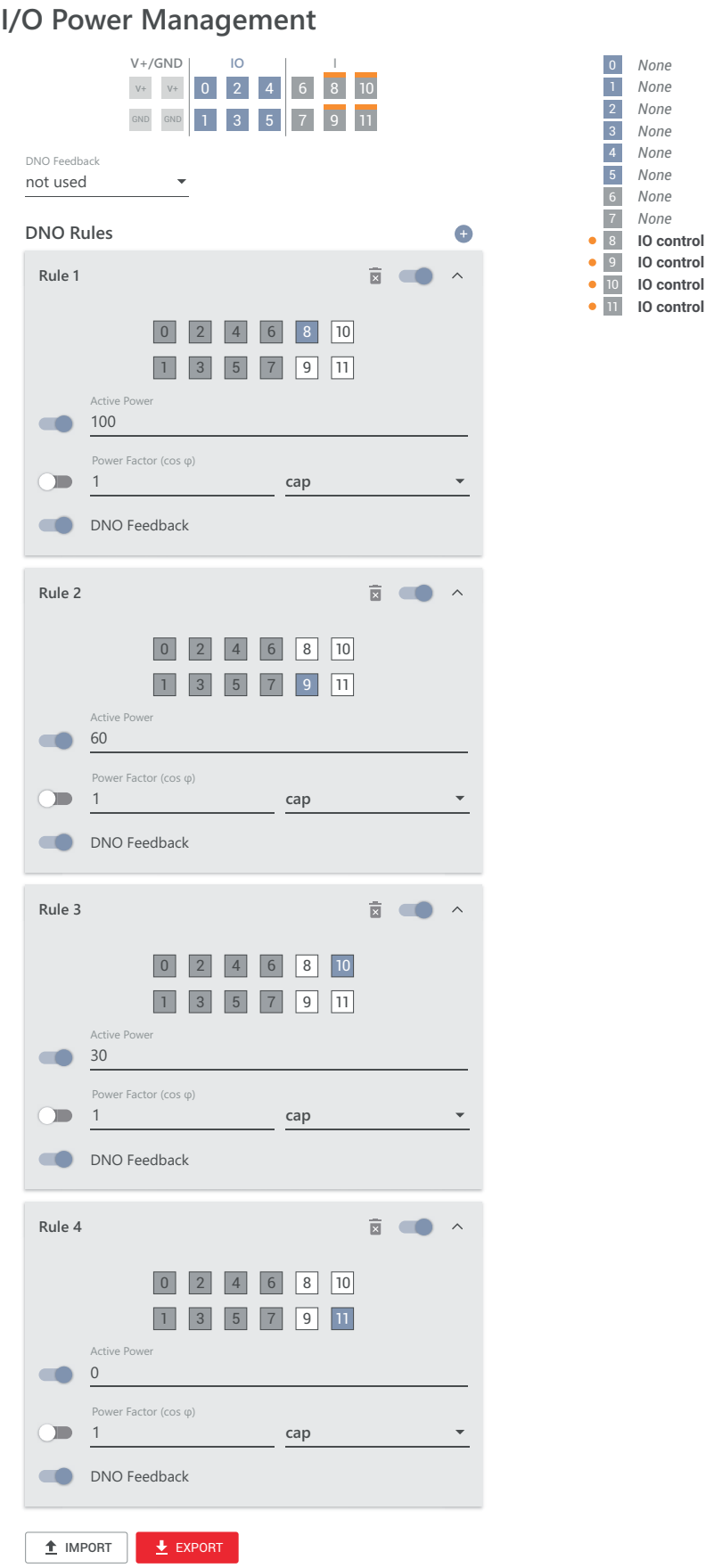

**Connection diagram - 3 relay**

The ripple control signal receiver and the I/Os terminal of the inverter can be connected to one another in accordance with the connection diagram.
If the distance between the inverter and the ripple control signal receiver exceeds 10 m, at least a CAT 5 cable is recommended and the shield must be connected at one end to the push-in terminal of the data communication area (SHIELD).

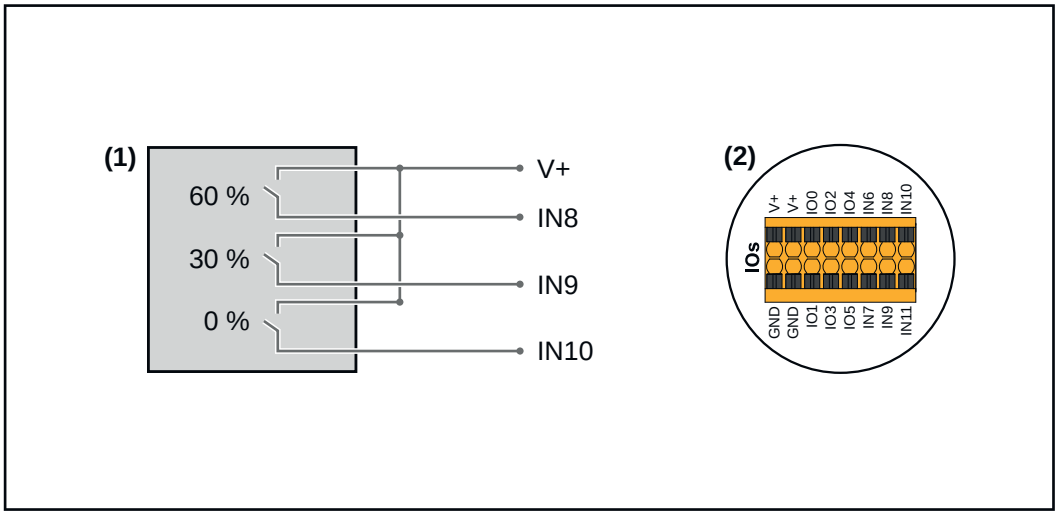


(1) Ripple control signal receiver with 3 relays, for effective power limiting.
(2) I/Os of the data communication area.

**Use the preconfigured file for 3-relay mode:**

1. Download the file (.fpc) **under 3-relay mode** onto the end device.
2. Upload the file (.fpc) in the **"I/O Power Management"** menu using the **"Import"** button.
3. Click on the **"Save"** button.

The settings for 3-relay mode are stored.

## I/O power management settings - 3 relays

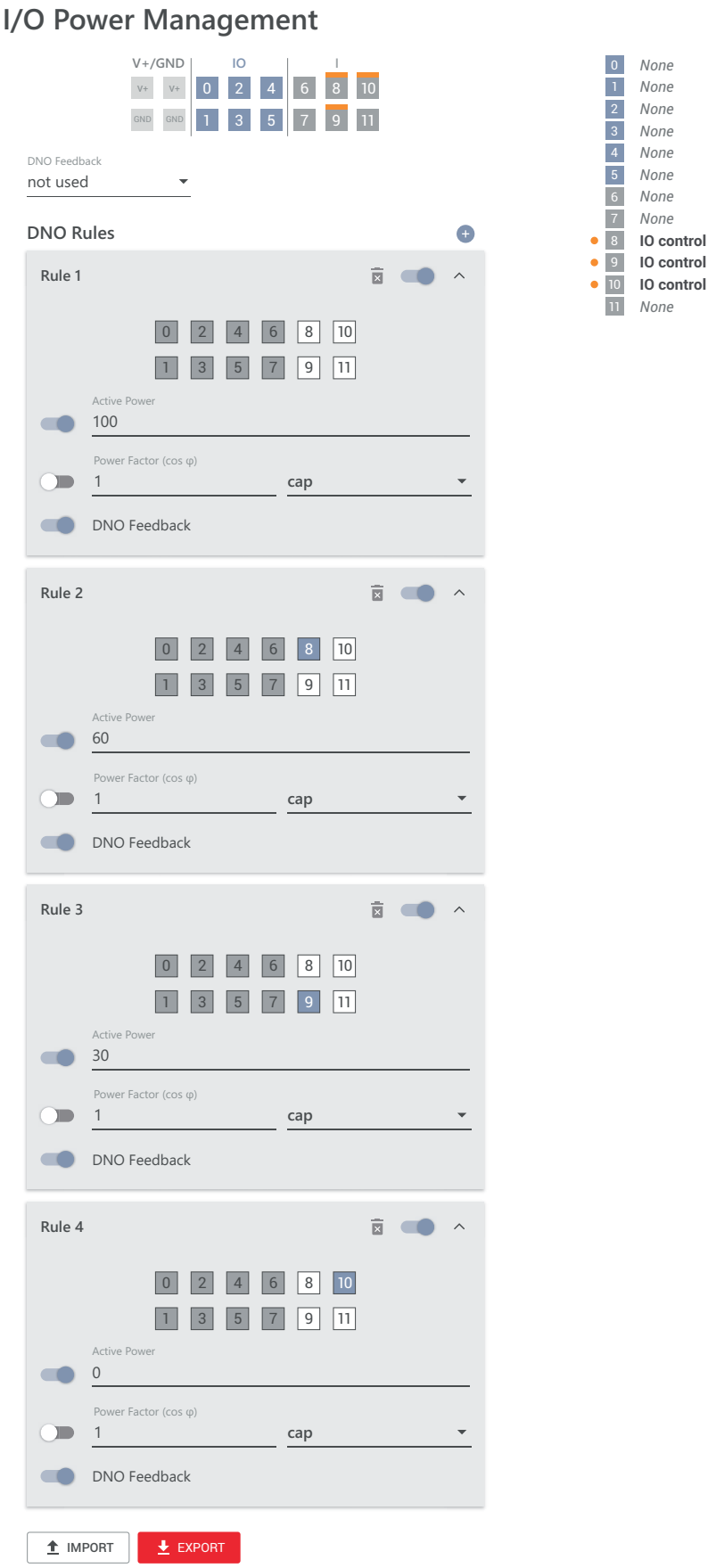

**Connection diagram - 2 relay**

The ripple control signal receiver and the I/Os terminal of the inverter can be connected to one another in accordance with the connection diagram.
If the distance between the inverter and the ripple control signal receiver exceeds 10 m, at least a CAT 5 cable is recommended and the shield must be connected at one end to the push-in terminal of the data communication area (SHIELD).

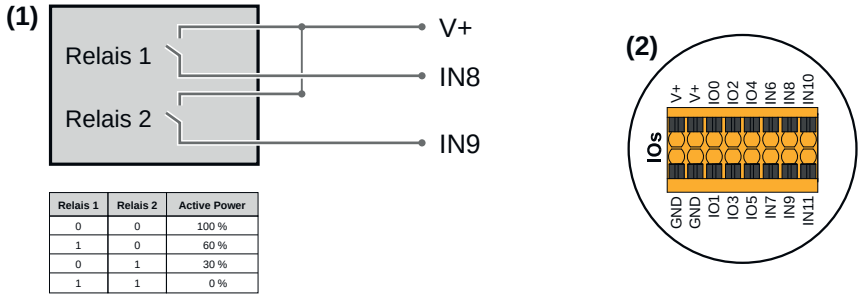


| Relais 1 | Relais 2 | Active Power |
|---|---|---|
| 0 | 0 | 100 % |
| 1 | 0 | 60 % |
| 0 | 1 | 30 % |
| 1 | 1 | 0 % |

(1) Ripple control signal receiver with 2 relays, for effective power limiting.
(2) I/Os of the data communication area.

**Use the preconfigured file for 2-relay mode:**

1. Download the file (.fpc) **under 2-relay mode** onto the end device.
2. Upload the file (.fpc) in the **"I/O Power Management"** menu using the **"Import"** button.
3. Click on the **"Save"** button.

The settings for 2-relay mode are stored.

## I/O power management settings - 2 relays

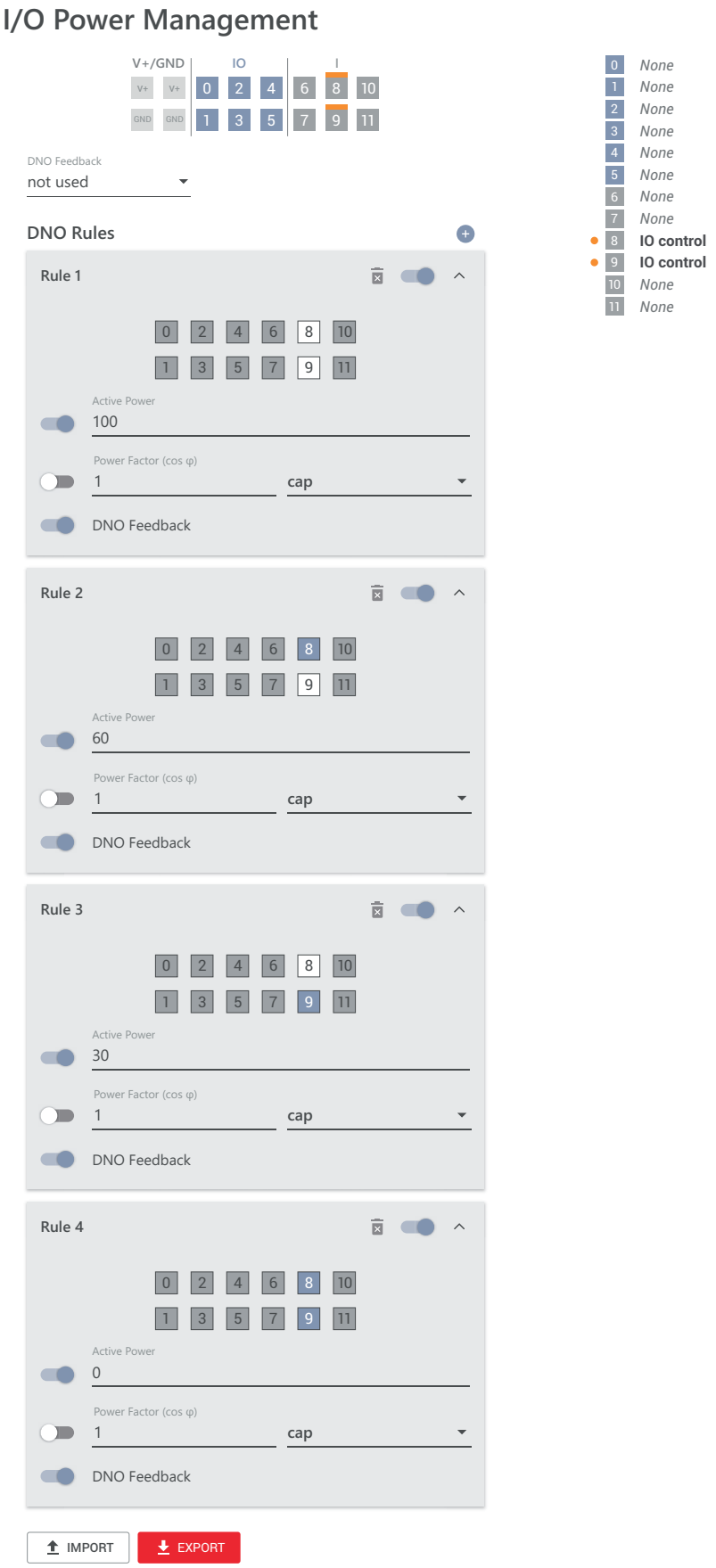

**Connection diagram - 1 relay**

The ripple control signal receiver and the I/Os terminal of the inverter can be connected to one another in accordance with the connection diagram.
If the distance between the inverter and the ripple control signal receiver exceeds 10 m, at least a CAT 5 cable is recommended and the shield must be connected at one end to the push-in terminal of the data communication area (SHIELD).

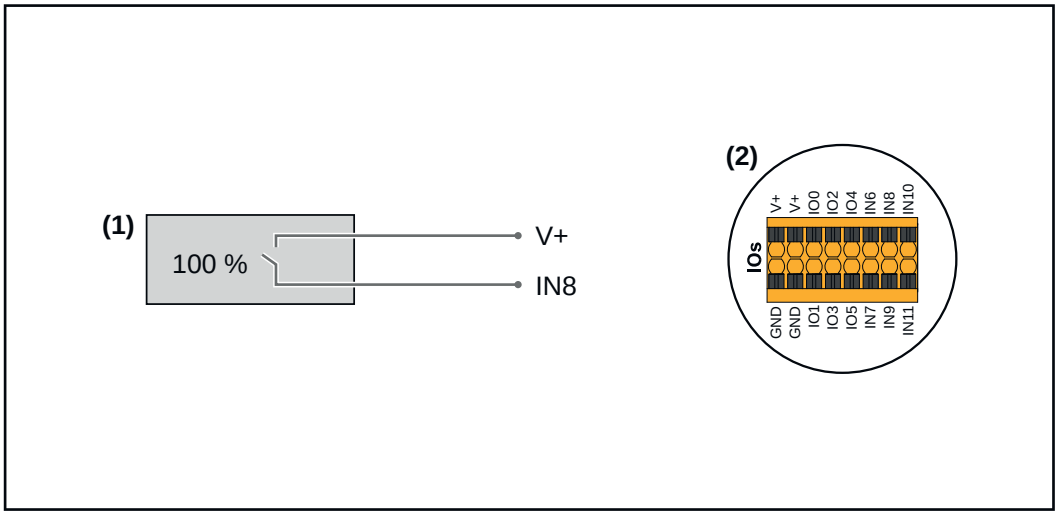


(1) Ripple control signal receiver with 1 relay, for effective power limiting.
(2) I/Os of the data communication area.

**Use the preconfigured file for 1-relay mode:**

1. Download the file (.fpc) **under 1-relay mode** onto the end device.
2. Upload the file (.fpc) in the **"I/O Power Management"** menu using the **"Import"** button.
3. Click on the **"Save"** button.

The settings for 1-relay mode are stored.

## I/O power management settings - 1 relay

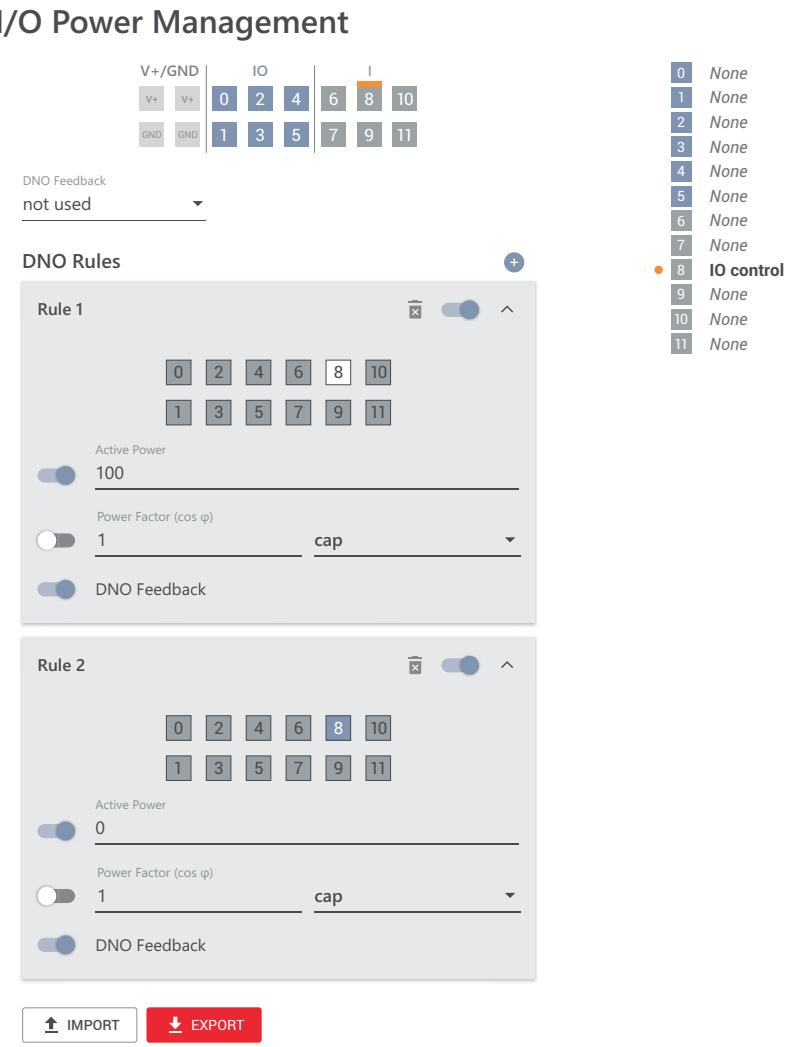


## Connecting a ripple control receiver to multiple inverters

The grid operator may request the connection of one or more inverters to a ripple control receiver in order to limit the effective power and/or the power factor of the photovoltaic system.

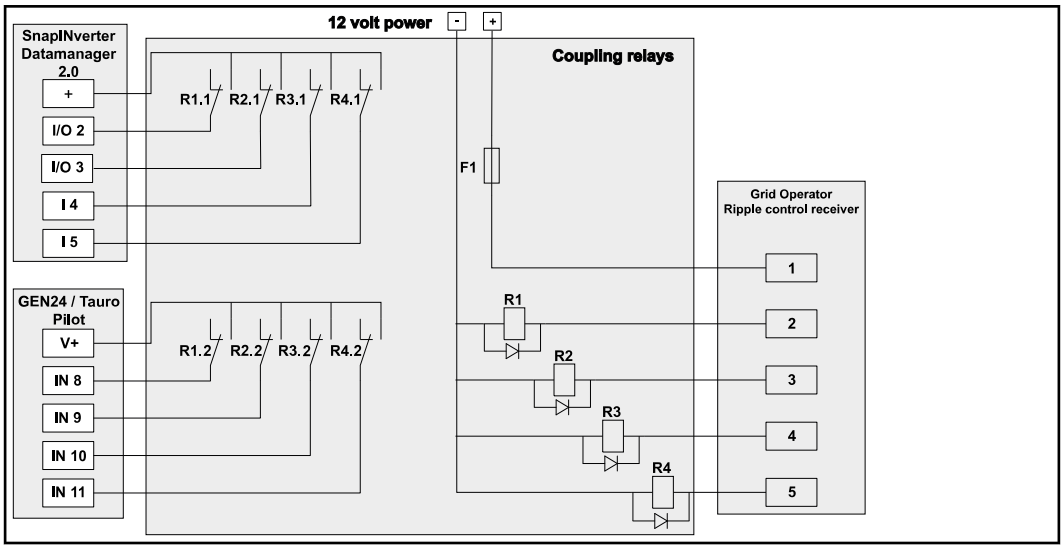


*Connection diagram showing ripple control receiver with multiple inverters*

The following Fronius inverters can be connected to a ripple control receiver via a distributor (coupling relay):
- Symo GEN24
- Primo GEN24
- Tauro
- SnapINverter (only devices with Fronius Datamanager 2.0)

**IMPORTANT!**
The **"4-relay mode"** setting (see **Connection diagram - 4 relay** and**I/O power management settings - 4 relays**) must be enabled on the user interface of each inverter connected to the ripple control receiver.

---

## Autotest (CEI 0-21)

**Description**
The **"Autotest"** can be used to check the protection function required by Italian standards for monitoring the voltage and frequency limit values of the inverter during commissioning. In normal operation, the inverter constantly checks the current voltage and frequency actual value of the grid.
After starting the autotest, various individual tests run automatically one after the other. Depending on network conditions, the duration of the test is about 15 minutes.

**IMPORTANT!**
The inverter may only be commissioned in Italy after an autotest has been successfully performed (CEI 0-21). If the autotest is not passed, feeding energy into the grid is not permitted. Once the autotest is started, it must be completed successfully. The autotest cannot be started during backup power operation.

| | |
|---|---|
| U max | Test for checking the maximum voltage in phase conductors |
| U min | Test for checking the minimum voltage in phase conductors |
| f max | Test for checking the maximum grid frequency |
| f min | Test for checking the minimum grid frequency |
| f max alt | Test for checking an alternative maximum grid frequency |
| f min alt | Test for checking an alternative minimum grid frequency |
| U outer min | Test for checking the minimum external voltages |
| U longT. | Test for checking the 10-minute mean voltage value |

**"Save as PDF"**

1. Click on the **"Save as PDF"** button.
2. Enter the file name in the input field and click on the **"Print"** button.

The PDF is created and displayed.

**Note on the autotest**
The limit values are set in the **"Grid Code"** menu.
The access code for the **"Grid Code"** menu corresponds to the installer code (PROFI menu) and is only made available after a written request to Fronius. A corresponding application form is available from the national technical support.

# Options

# Surge protective device (SPD)

**General**

A surge protective device (SPD) protects against temporary overvoltages and dissipates surge currents (e.g. lightning strike). Building on an overall lightning protection concept, the SPD helps to protect your PV system components.
For detailed information on the wiring diagram of the surge protective device, see chapter **Surge protective device (SPD)** on page **228**.

If the surge protective device is triggered, the colour of the indicator changes from green to red (mechanical display) and the operation LED of the inverter lights up red (see chapter **Button functions and LED status indicator** on page **35**). The error code **"1030 WSD Open"** is displayed on the user interface of the inverter in the **"System"** → **"Event Log"** menu or in the user menu under **"Notifications"** as well as in Fronius Solar.web. In this case, the inverter must be repaired by an authorised specialist.

**IMPORTANT!**
The inverter also switches off if the 2-pin signal cable of the surge protective device is interrupted or damaged.

**External surge protective device**
To receive notification when external surge protective devices are triggered, it is recommended to connect the feedback contacts in series to the WSD input.

**Safety**

⚠ **WARNING!**

**Danger due to electrical voltage on live parts of the photovoltaic system.**
This can result in serious injury and damage to property.
- ▶ Disconnect live parts of the photovoltaic system on all pins and on all sides.
- ▶ Secure against re-activation in accordance with national regulations.
- ▶ Allow the capacitors of the inverter to discharge (2 minutes).
- ▶ Check that the inverter is de-energised with a suitable measuring device.

⚠ **WARNING!**

**Danger due to work that has been carried out incorrectly.**
This can result in serious injury and damage to property.
- ▶ Installing and connecting an option must only be carried out by service personnel trained by Fronius and only within the scope of the respective technical regulations.
- ▶ Follow the safety rules.

**Scope of supply**

The surge protective device (SPD) is an optional extra and can be retrofitted to the inverter.

For technical data, see chapter "**Technical data**" on page **182**.

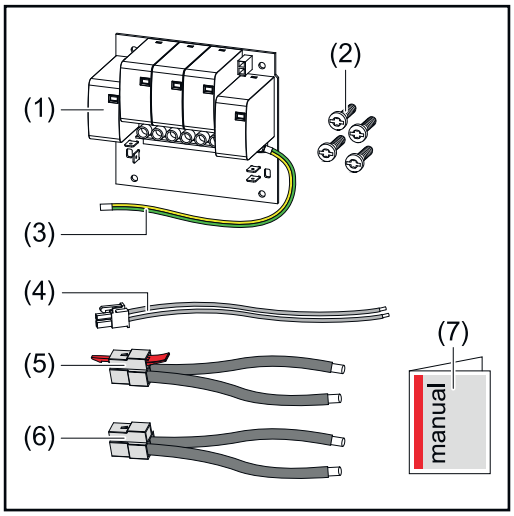


1. PC board
2. 4 TX20 screws
3. Ground conductor
4. 2-pin signal cable
5. PV cable
6. PV+ cable
7. User Information

**De-energising the inverter**

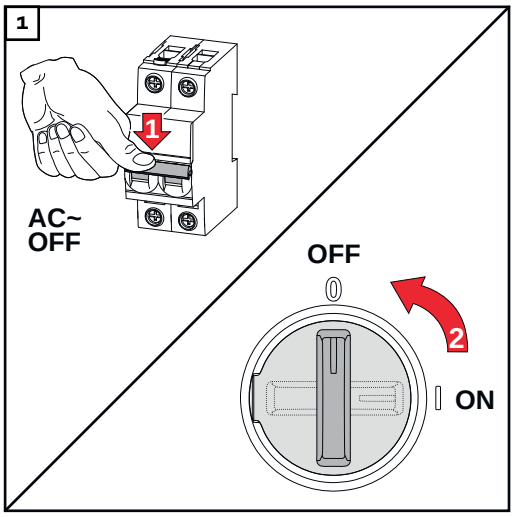


Turn off the automatic circuit breaker. Set the DC disconnector to the "Off" switch position.

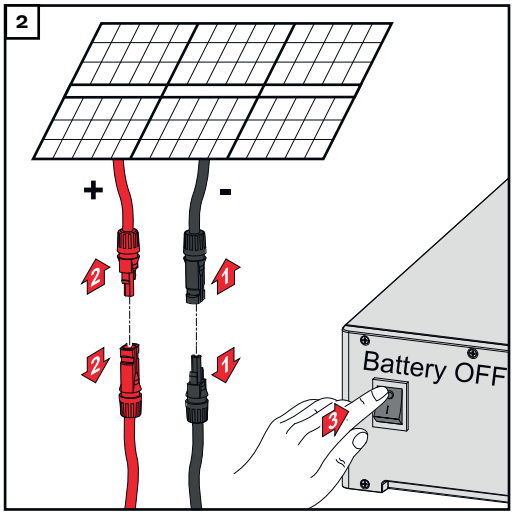


Disconnect connections from the solar module strings (+/-). Switch off the battery connected to the inverter.

Wait for the capacitors of the inverter to discharge (2 minutes).

**Installation**

**⚠ CAUTION!**

**Danger due to insufficiently dimensioned ground conductor.**
Damage to the inverter due to thermal overload can result.

▶ The national standards and guidelines must be observed for dimensioning the ground conductor.

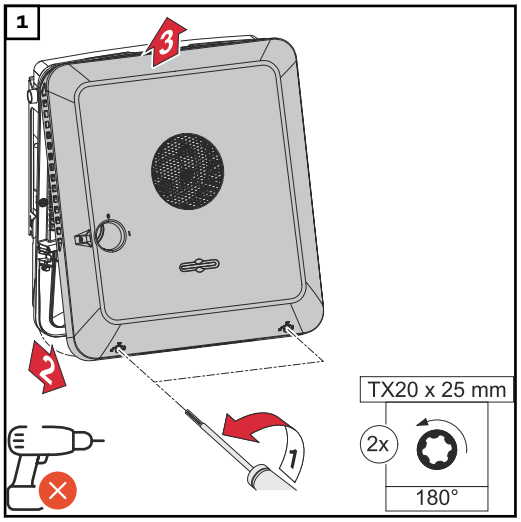


Loosen the two screws on the underside of the housing cover by rotating them 180° to the left using a screwdriver (TX20). Then lift the housing cover away from the inverter at the bottom and detach from above.

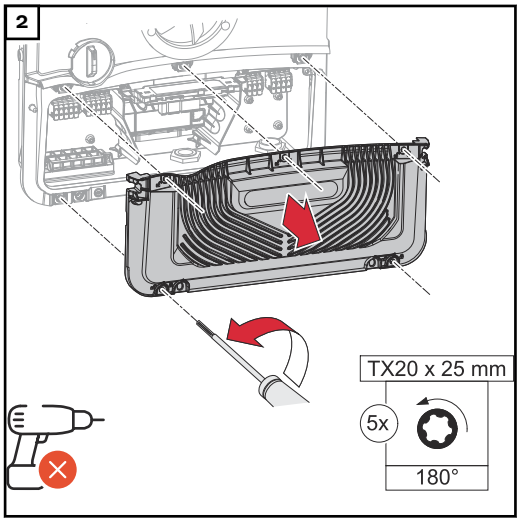


Loosen the five screws of the connection area cover by rotating them 180° to the left using a screwdriver (TX20). Remove the connection area cover from the device.

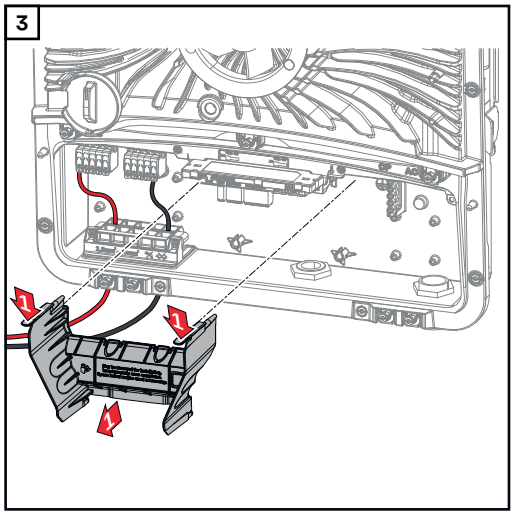


Remove the connection area divider by pressing the snap tabs.