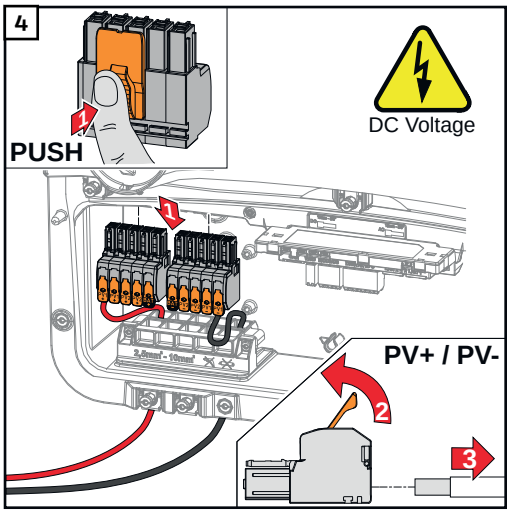


Remove the DC push-in terminals from the slots and disconnect them from the cables (only necessary if the installation already exists).

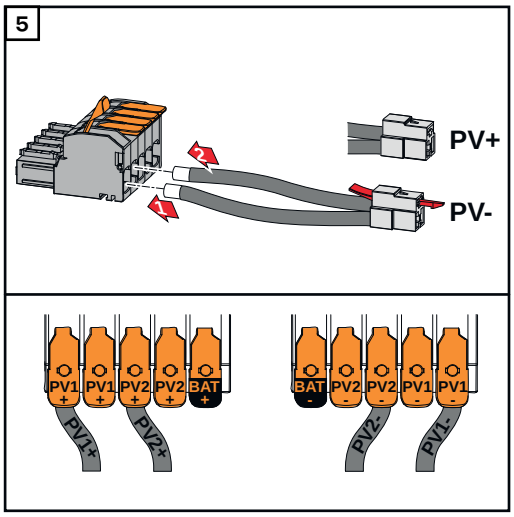


Connect the supplied PV+/PV- cables to the respective connections.

**IMPORTANT!**
Note the labelling of the cables when connecting.

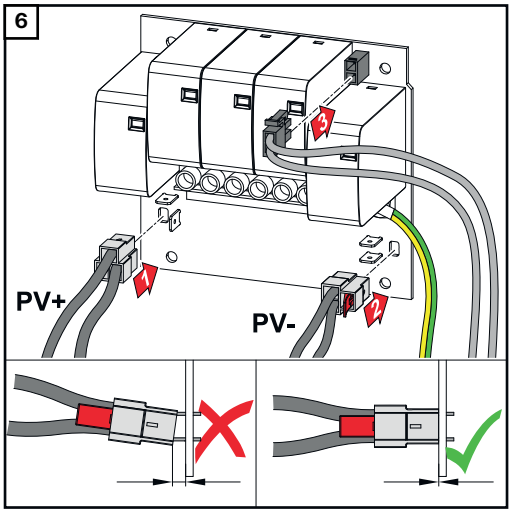


Connect the supplied cables to the respective connections on the PC board.

**IMPORTANT!**
The plugs must be connected onto the PC board as far as they will go.

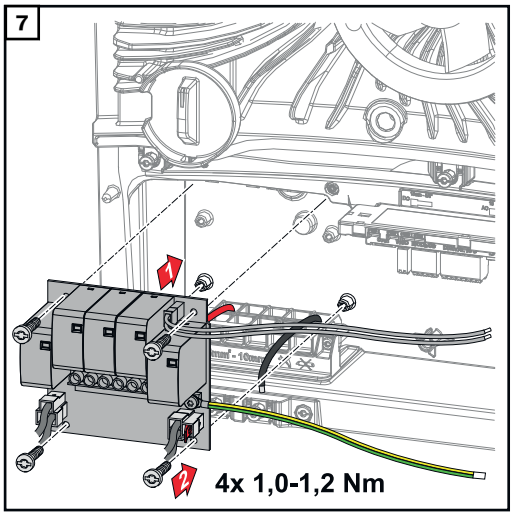


Insert the PC board into the inverter and secure with the four screws (TX20) supplied at a torque of 1.0 - 1.2 Nm.

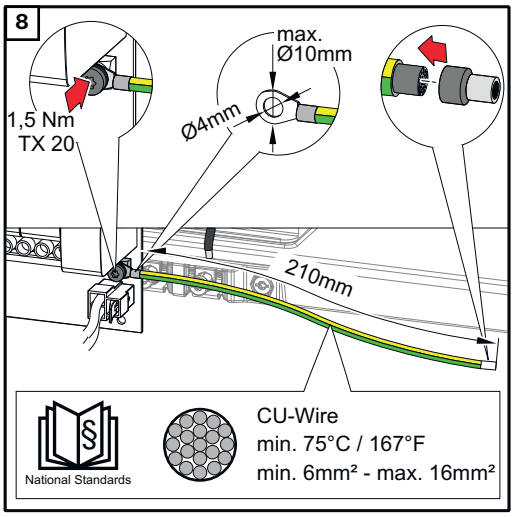


**IMPORTANT!**
Depending on national standards and guidelines, a larger cross section of the ground conductor may be required.

Dimension the cable cross section of the ground conductor according to the national standards and guidelines and fit a ring cable lug (inner diameter: 4 mm, outer diameter: max. 10 mm) as well as a corresponding ferrule. Fasten the ground conductor to the PC board with a torque of 1.5 Nm.

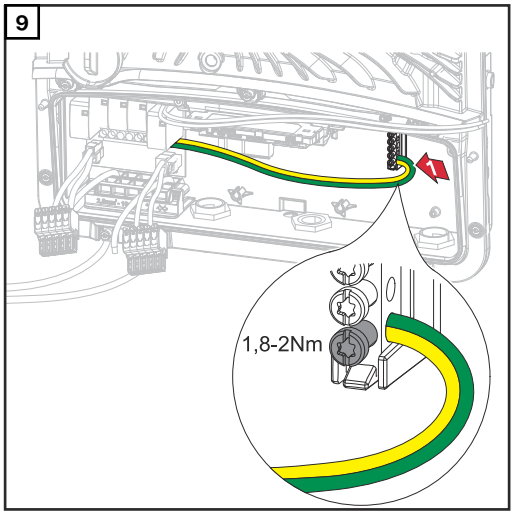


Fasten the ground conductor to the first input from the bottom of the ground electrode terminal using a screwdriver (TX20) and a torque of 1.8 - 2 Nm.

**IMPORTANT!**
The use of other inputs can make it difficult to insert the connection area divider or damage the ground conductor.

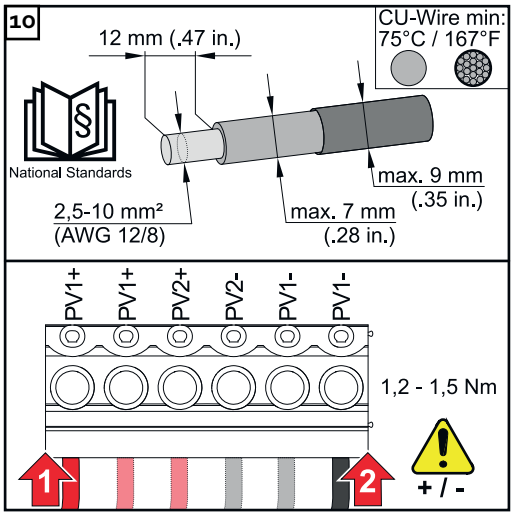


Strip the insulation on the single conductors by 12 mm and secure to the corresponding slot of the terminal on the PC board with a torque of 1.2 - 1.5 Nm.

**IMPORTANT!**
The cable cross-section must be selected according to the specifications for the respective inverter power category (see chapter **Permissible cables for the electrical connection** on page **67**).

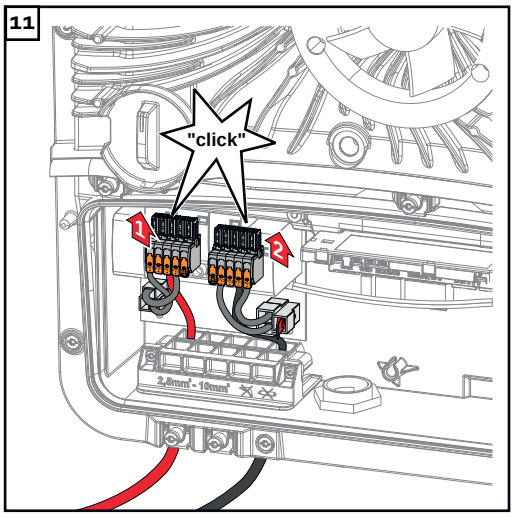


Push the DC push-in terminals into the corresponding slot until there is an audible click.

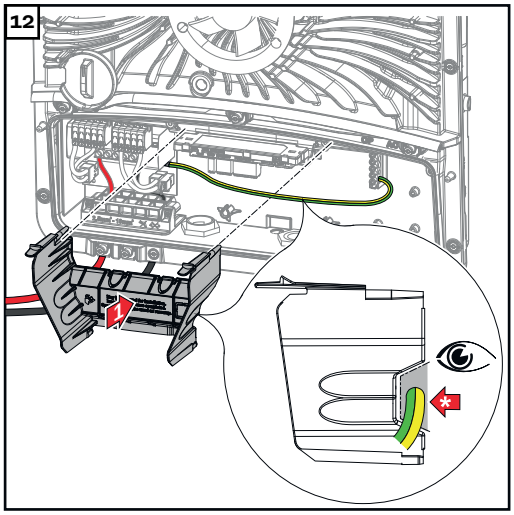


Re-insert the connection area divider.

* Lay the ground conductor in the integrated cable duct.

**IMPORTANT!**
Make sure when inserting the connection area divider that the ground conductor is not damaged (kinked, pinched, crushed, etc.).

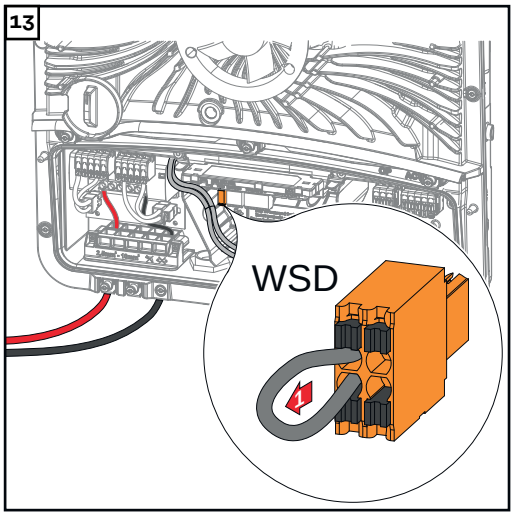


Remove the factory installed bypass on the push-in WSD terminal.

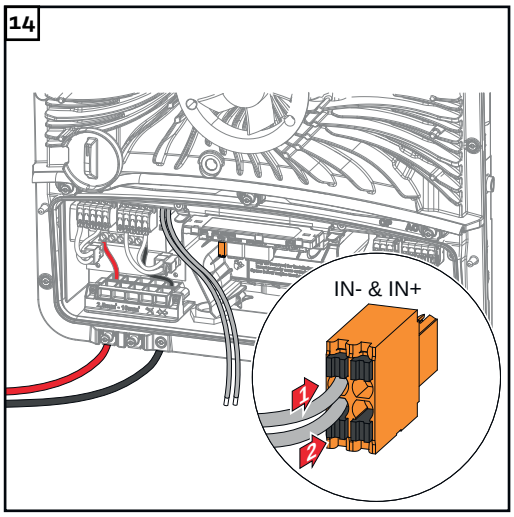


Connect the signal cable to the push-in WSD terminal on the IN- and IN+ slots, observing the labelling.

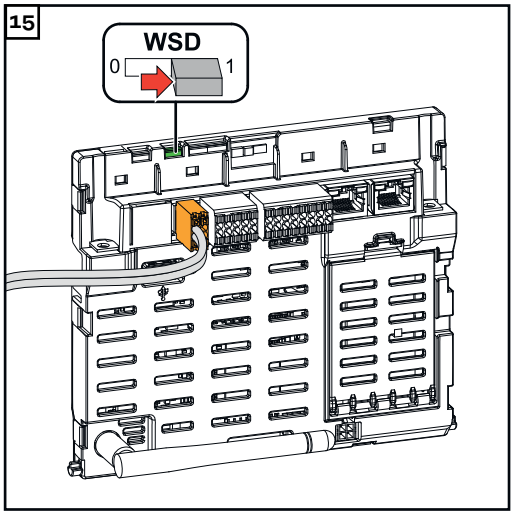


Check whether the WSD switch is in position 1, adjust if necessary (factory setting: position 1).

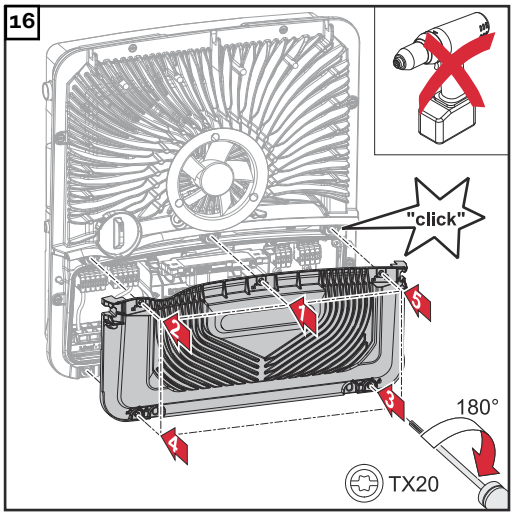


Place the cover on the connection area. Tighten the five screws by rotating them 180° to the right in the indicated order using a screwdriver (TX20).

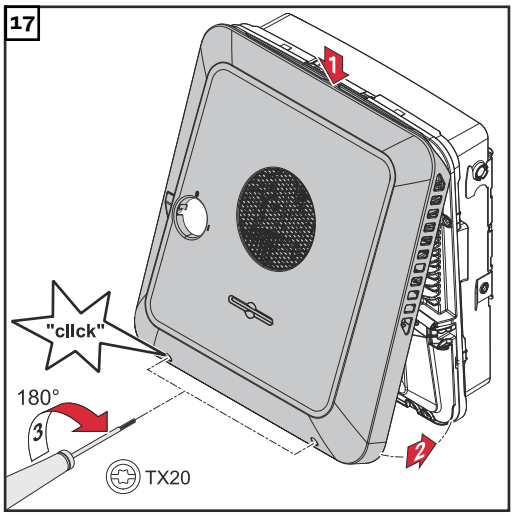


Clip the housing cover onto the inverter from above.
Press on the lower part of the housing cover and tighten the two screws by rotating them 180° to the right using a screwdriver (TX20).

## Commissioning the inverter

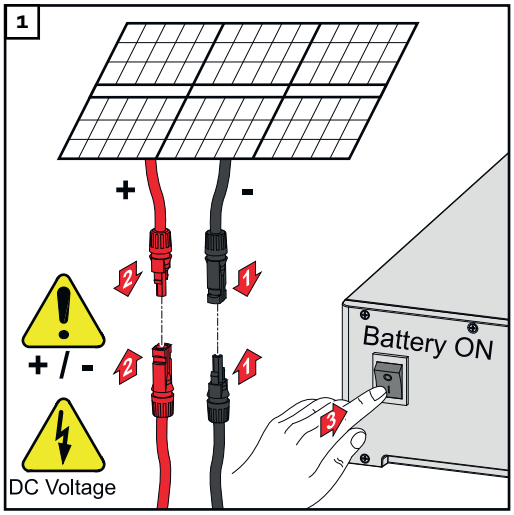


Connect the solar module strings (+/-).
Switch on the battery connected to the inverter.

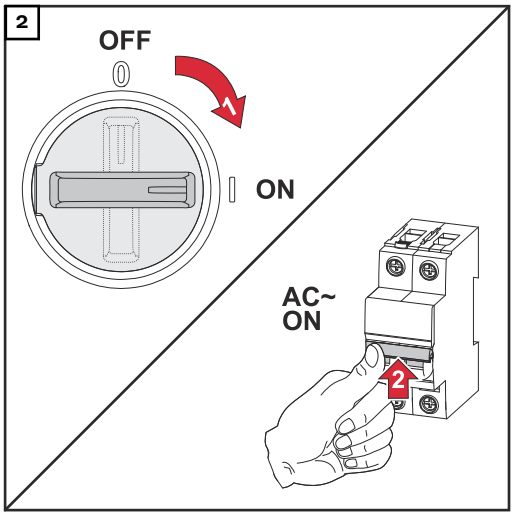


Set the DC disconnector to the "On" switch position. Switch on the automatic circuit breaker.

# DC Connector Kit GEN24

**General**

The DC Connector Kit GEN24 (item no.: 4,240,046) enables the connection of PV connection strings with a total current above 25 A.

**General comments regarding PV modules**

To enable suitable PV modules to be chosen and to use the inverter as efficiently as possible, it is important to bear the following points in mind:

- If insolation is constant and the temperature is falling, the open-circuit voltage of the PV modules will increase. The open-circuit voltage must not exceed the maximum permissible system voltage. If the open-circuit voltage exceeds the specified values, the inverter will be destroyed and all warranty claims will be forfeited.
- The temperature coefficients on the data sheet of the PV modules must be observed.
- Exact values for sizing the PV modules can be obtained using suitable calculation tools, such as the **Fronius Solar.creator**.

**IMPORTANT!**
Before connecting up the PV modules, check that the voltage for the PV modules specified by the manufacturer corresponds to the actual measured voltage.

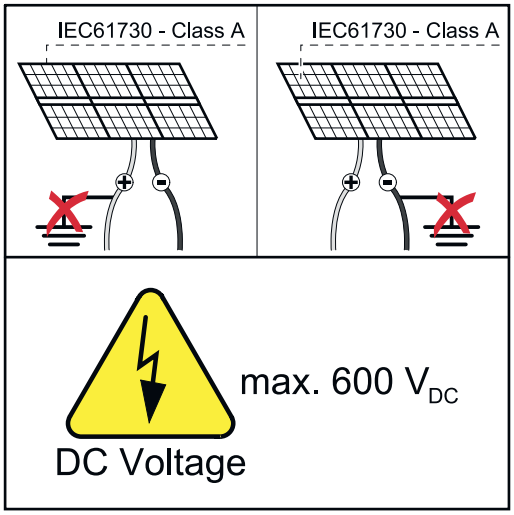


**IMPORTANT!**
The PV modules connected to the inverter must comply with the IEC 61730 Class A standard.

**IMPORTANT!**
Solar module strings must not be earthed.

**Safety**

**⚠ WARNING!**

**Danger due to incorrect operation and incorrectly performed work.**
This can result in serious injury and damage to property.

- ▶ Commissioning as well as maintenance and service work in the power module of the inverter must only be carried out by service personnel trained by Fronius and only within the scope of the respective technical regulations.
- ▶ Read the Installation and Operating Instructions before installing and commissioning the equipment.

**⚠ WARNING!**

**Danger due to grid voltage and DC voltage from solar modules that are exposed to light.**
This can result in serious injury and damage to property.
- ▶ Ensure that the AC and DC side of the inverter are de-energised before carrying out any connection, maintenance or service tasks.
- ▶ Only an authorised electrical engineer is permitted to connect this equipment to the public grid.

**⚠ WARNING!**

**Danger due to damaged and/or contaminated terminals.**
This can result in serious injury and damage to property.
- ▶ Before making any connections, check the terminals for damage and contamination.
- ▶ Remove contamination in the de-energized state.
- ▶ Have defective terminals repaired by an authorised specialist.

**Scope of supply**

The DC Connector Kit GEN24 is an optional extra and can be retrofitted to the inverter.

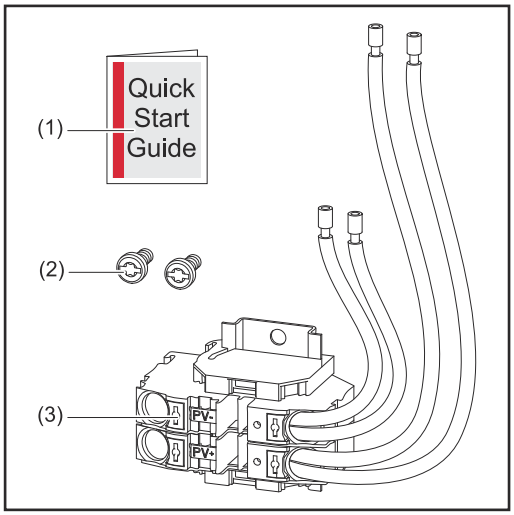


1. User Information
2. 2 TX20 screws
3. DC Connector Kit GEN24

**De-energising the inverter**

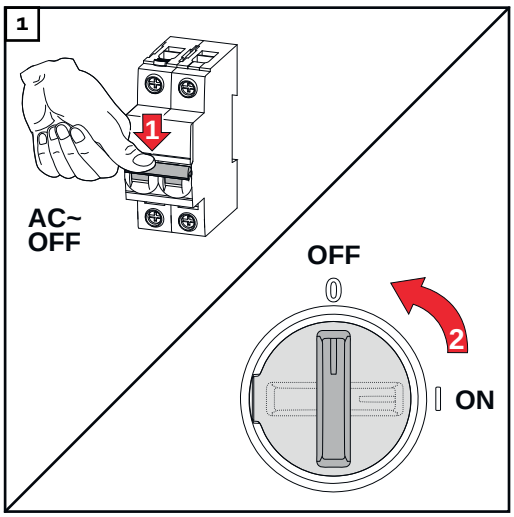


Turn off the automatic circuit breaker. Set the DC disconnector to the "Off" switch position.

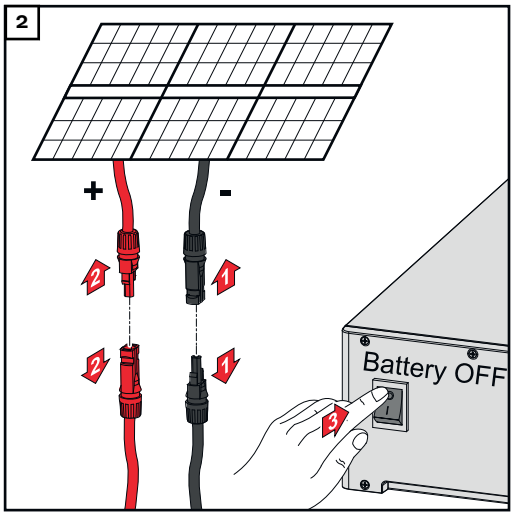


Disconnect connections from the solar module strings (+/-). Switch off the battery connected to the inverter.

Wait for the capacitors of the inverter to discharge (2 minutes).

## Installation

**⚠ CAUTION!**

**Danger due to insufficiently dimensioned DC cables.**
Damage to the inverter due to thermal overload can result.
▶ When dimensioning the DC cables, adhere to the specifications in chapter **Permissible cables for the electrical connection** on page **67**.

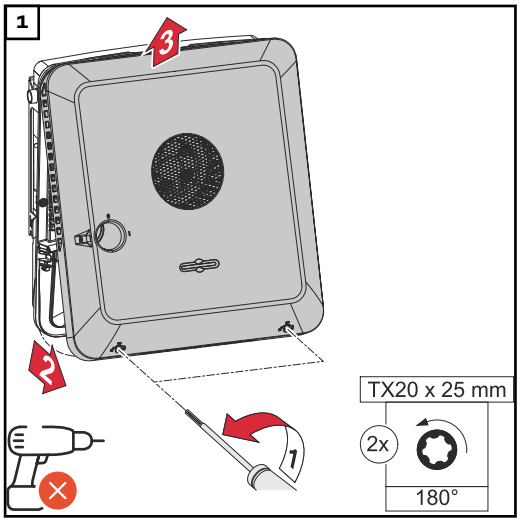


Loosen the 2 screws on the underside of the housing cover by rotating them 180° to the left using a screwdriver (TX20). Then lift the housing cover away from the inverter at the bottom and detach from above.

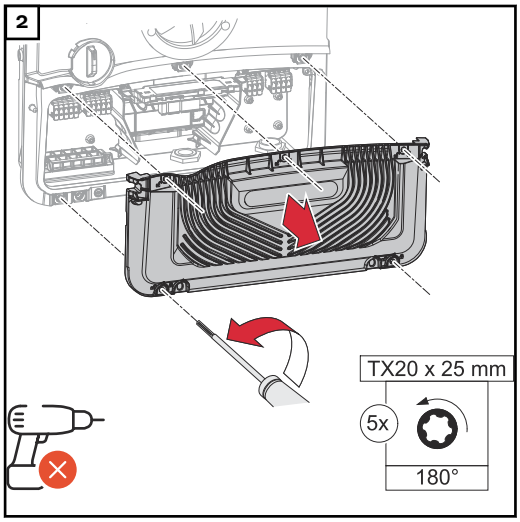


Loosen the 5 screws of the connection area cover by rotating them 180° to the left using a screwdriver (TX20). Remove the connection area cover from the device.

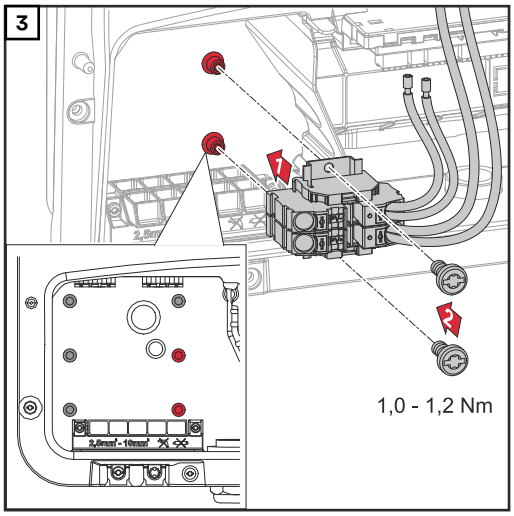


Insert the DC Connector GEN24 into the inverter and secure with the two screws (TX20) supplied at a torque of 1.0 - 1.2 Nm.

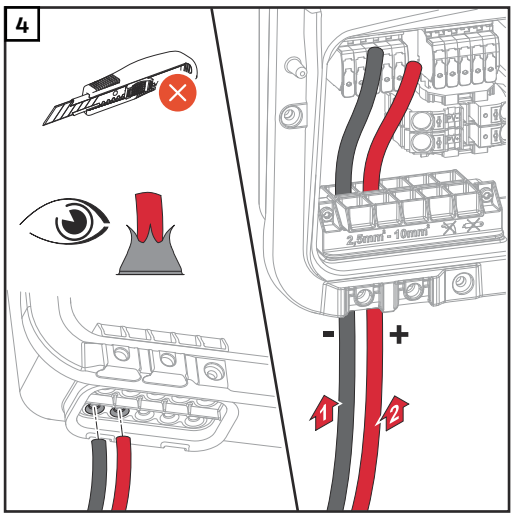


Manually push the DC cables through the DC bushings.

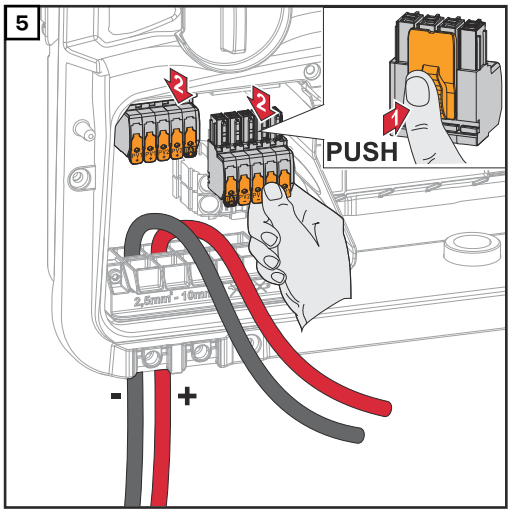


Press the lock on the back of the terminal and pull off the DC terminals.

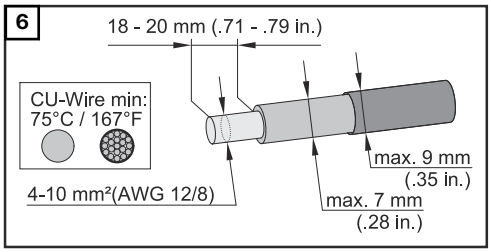


Strip the insulation of the single conductors by 18 – 20 mm.
Select the cable cross section in accordance with the instructions in **Permissible cables for the electrical connection** from page **67**.

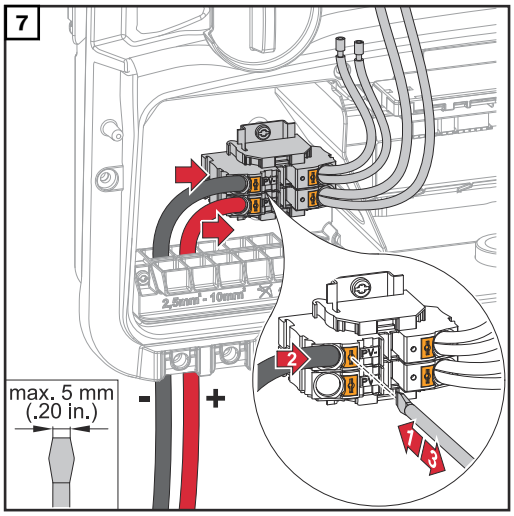


Use a slotted screwdriver to push in the lock on the terminal. Insert the stripped single conductor into the slot provided, in each case as far as it will go. Then withdraw the slotted screwdriver from the lock.

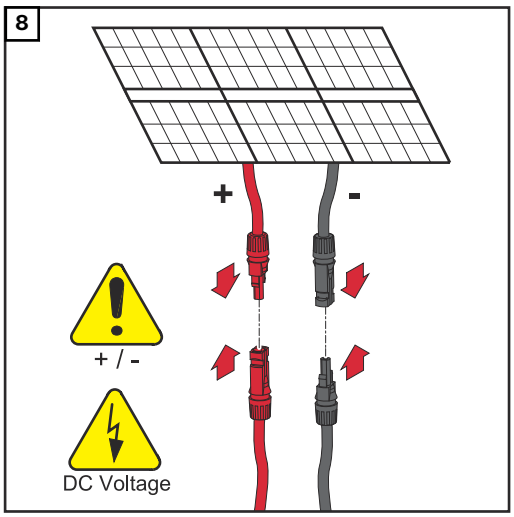


Connect the solar module strings (+/-).

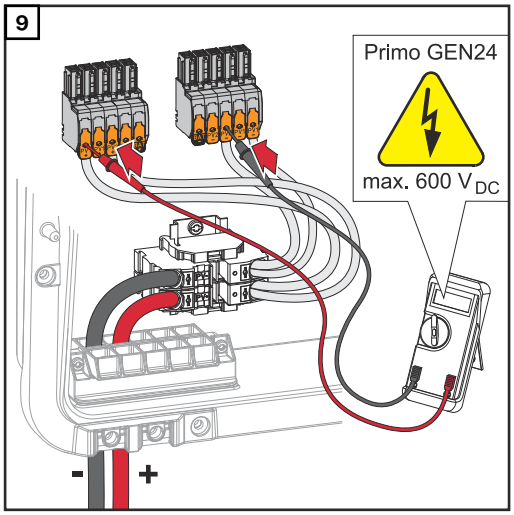


Use a suitable measuring instrument to check the voltage and polarity of the DC cabling.

**⚠ CAUTION!**

**Danger due to polarity reversal at the terminals.**
This may result in severe damage to the inverter.

▶ Check the voltage (**max. 600 $V_{DC}$**) and polarity of the DC cabling with a suitable measuring instrument.

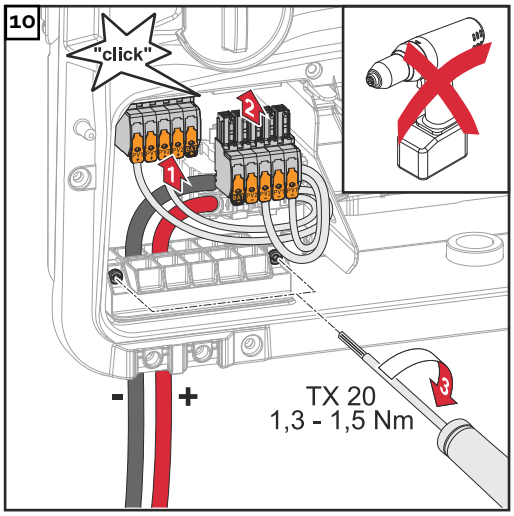


Insert the DC terminals into the respective slot until they engage. Fasten the screws of the strain-relief device to the housing using a screwdriver (TX20) and a torque of 1.3 – 1.5 Nm.

**NOTE!**

**Risk due to overtorque at the strain-relief device.**
This may result in damage to the strain-relief device.
▶ Do not use a drill driver.

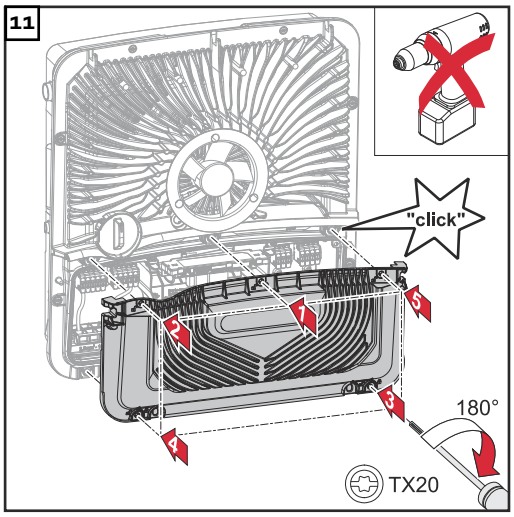


Place the cover on the connection area. Tighten the 5 screws by rotating them 180° to the right in the indicated order using a screwdriver (TX20).

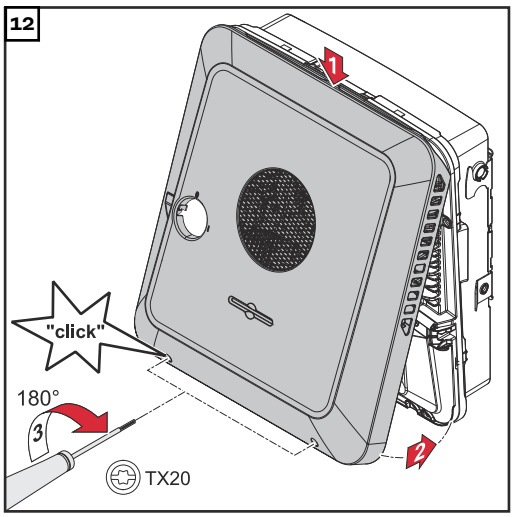


Clip the housing cover onto the inverter from above.
Press on the lower part of the housing cover and tighten the 2 screws by rotating them 180° to the right using a screwdriver (TX20).

**Commissioning the inverter**

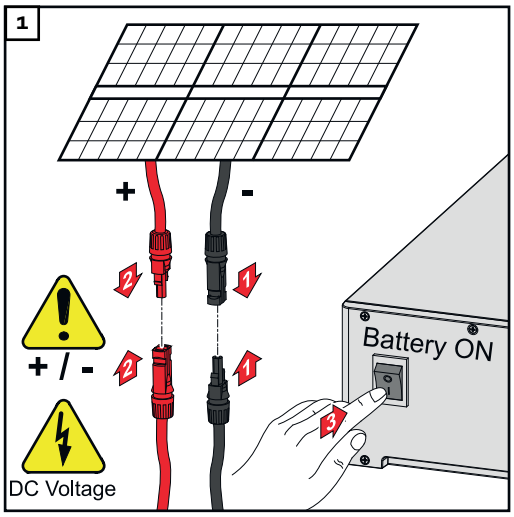


Connect the solar module strings (+/-). Switch on the battery connected to the inverter.

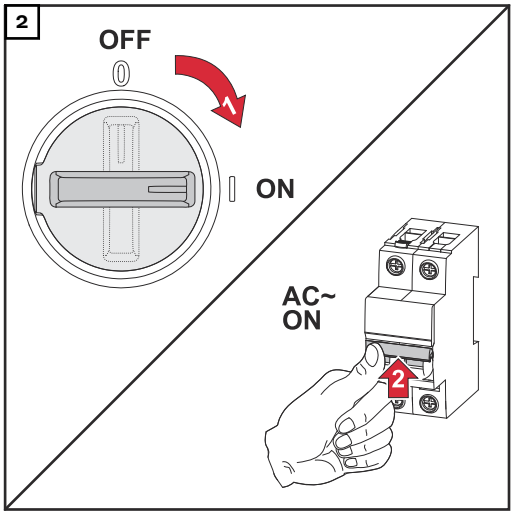


Set the DC disconnector to the "On" switch position. Switch on the automatic circuit breaker.

# PV Point Comfort

**Safety**

**⚠ WARNING!**

**Danger due to electrical voltage on live parts of the photovoltaic system.**
This can result in serious injury and damage to property.
- ▶ Disconnect live parts of the photovoltaic system on all pins and on all sides.
- ▶ Secure against re-activation in accordance with national regulations.
- ▶ Allow the capacitors of the inverter to discharge (2 minutes).
- ▶ Check that the inverter is de-energised with a suitable measuring device.

**⚠ WARNING!**

**Danger due to work that has been carried out incorrectly.**
This can result in serious injury and damage to property.
- ▶ Installing and connecting an option must only be carried out by service personnel trained by Fronius and only within the scope of the respective technical regulations.
- ▶ Follow the safety rules.

**⚠ WARNING!**

**Danger due to damaged and/or contaminated terminals.**
This can result in serious injury and damage to property.
- ▶ Before making any connections, check the terminals for damage and contamination.
- ▶ Remove contamination in the de-energized state.
- ▶ Have defective terminals repaired by an authorised specialist.

*NOTE!*

**The continuous supply via the PV Point depends on the available PV power.**
If the solar modules are not supplying enough power, interruptions may occur.
- ▶ Do not connect any loads that require an uninterruptible supply.

**IMPORTANT!**
The valid national laws, standards and provisions, as well as the specifications of the relevant grid operator are to be taken into account and applied.
It is highly recommended that the specific installation be agreed with the grid operator and explicitly approved by this operator. This obligation applies to system constructors in particular (e.g. installers).

**Scope of supply**

The PV Point Comfort is an optional extra and can be retrofitted to the inverter.

For technical data, see "**Technical data**" on page **182**.

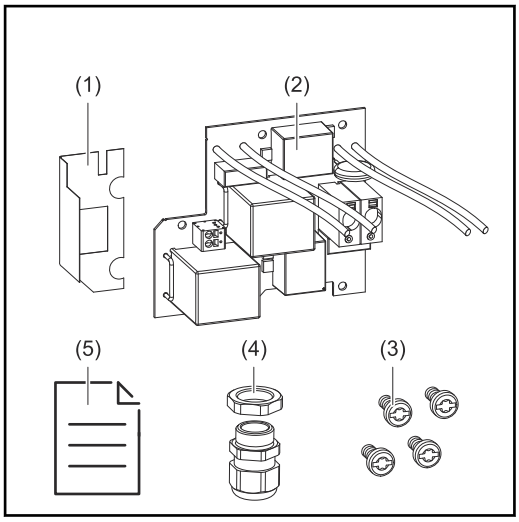


1. Insulation film
2. PV Point Comfort
3. 4 TX20 screws
4. Cable gland
5. User Information

**De-energising the inverter**

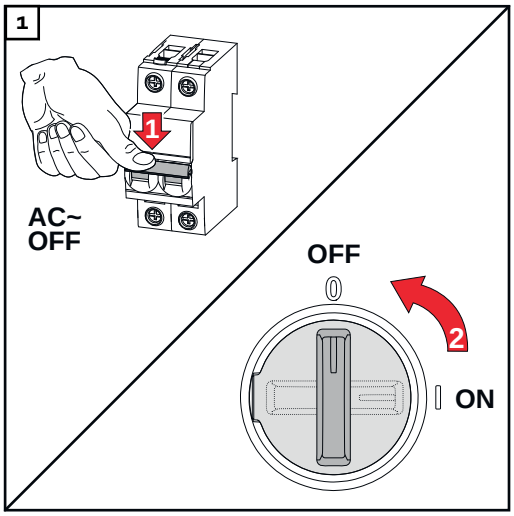


Turn off the automatic circuit breaker. Set the DC disconnector to the "Off" switch position.

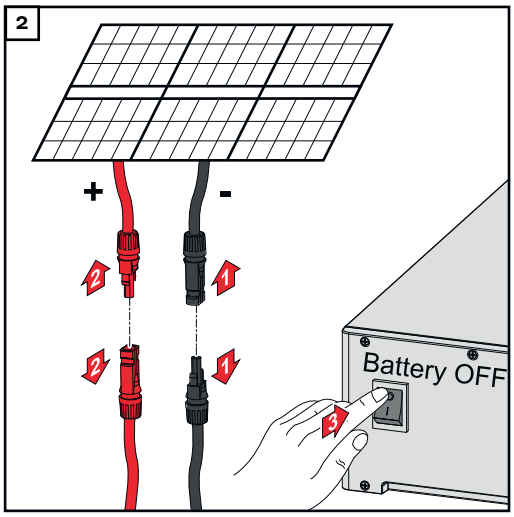


Disconnect connections from the solar module strings (+/-). Switch off the battery connected to the inverter.

Wait for the capacitors of the inverter to discharge (2 minutes).

**⚠ CAUTION!**

**Danger due to insufficiently dimensioned ground conductor.**
Damage to the inverter due to thermal overload can result.
▶ The national standards and guidelines must be observed for dimensioning the ground conductor.

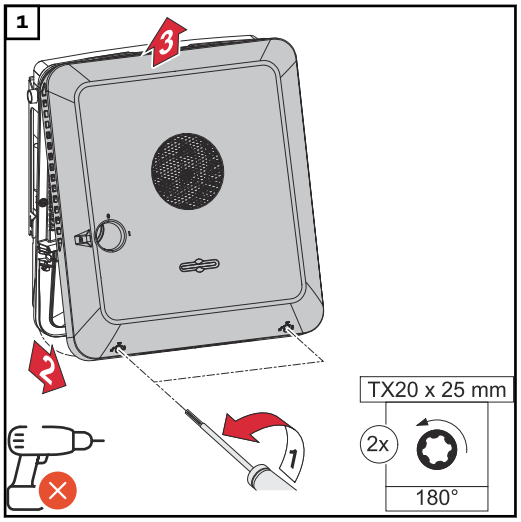


Loosen the 2 screws on the underside of the housing cover by rotating them 180° to the left using a screwdriver (TX20). Then lift the housing cover away from the inverter at the bottom and detach from above.

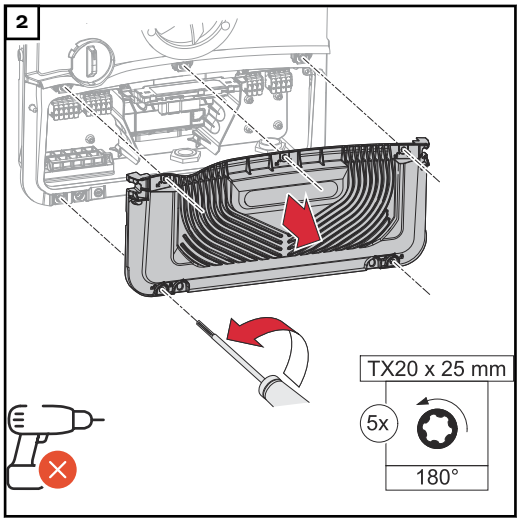


Loosen the 5 screws of the connection area cover by rotating them 180° to the left using a screwdriver (TX20). Remove the connection area cover from the device.

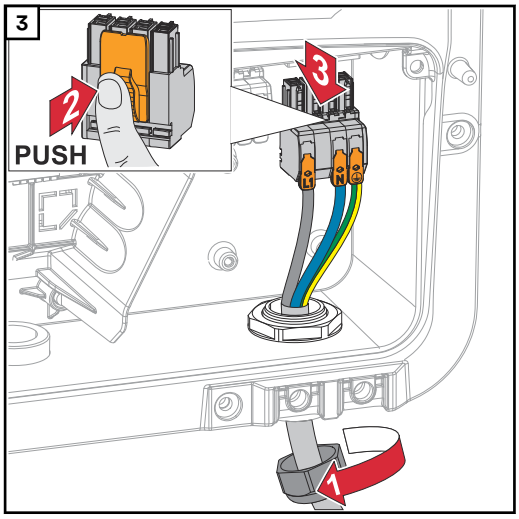


Press the lock on the back of the terminal and remove the AC terminals. Loosen the cable gland.