Operating Instructions

Fronius Primo GEN24
3.0 / 3.0 Plus / 3.6 / 3.6 Plus
4.0 / 4.0 Plus / 4.6 / 4.6 Plus
5.0 / 5.0 Plus / 6.0 / 6.0 Plus

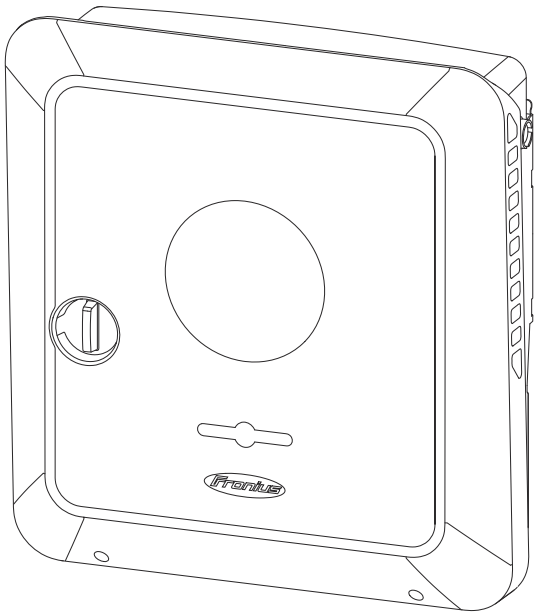

EN | Operating Instructions

42,0426,0302,EN 024-02062024

Contents

Safety rules 9
Explanation of safety notices 9
Safety 9
General 9
Environmental conditions 10
Qualified personnel 10
Noise emission values 10
EMC measures 11
Backup power 11
Data protection 12
Copyright 12
Protective earthing (PE) 12

General information 13

Fronius Primo GEN24 15
Device concept 15
Function overview 15
Fronius UP 16
Scope of supply 16
Intended use 16
Thermal concept 17
Fronius Solar.web 17
Local communication 18
The various operating modes 19
Operating modes – Explanation of symbols 19
Operating mode – Inverter with battery 20
Operating mode – Inverter with battery and several Smart Meters 20
Operating mode - inverter with battery, AC-coupled to another inverter 20
Operating mode – Inverter with battery and backup power function 21
Operating mode – Inverter with battery, Ohmpilot and backup power function 21
Operating mode – Inverter with battery, further inverter and backup power function 21
Energy flow direction of the inverter 22
Operating states (only for systems with a battery) 22
Energy saving mode 24
General 24
Switch-off conditions 24
Switch-on conditions 24
Special case 24
Indication of energy saving mode 25
Suitable batteries 26
General 26
Limitations in operation 26
BYD Battery-Box Premium 26
LG FLEX 27
Manual system start 29
Requirements 29
Notification of system shutdown 29
Manual battery start after system shutdown 29
Starting backup power operation after a system shutdown 29
Protection of people and equipment 30
Central grid and system protection 30
WSD (wired shutdown) 30
RCMU 30
Insulation monitoring 30
AFCI - Arc Fault Circuit Interrupter (Arc Guard) 30
Safe state 31
Surge protective device 31
Control elements and connections 32

Connection area 32
Connection area divider 33
Ground electrode terminal 33
DC disconnector 34
Data communication area 34
Button functions and LED status indicator 35
Internal schematic connection diagram of the IOs 37

Backup power variant - PV Point (OP) 39

General 41
Explanatory note - PV Point/PV Point Comfort 41
PV Point (OP) 41
PV Point Comfort 42

Backup power variant - Full Backup 43

General 45
Prerequisites for backup power mode 45
Transitioning from feeding energy into the grid to backup power mode 45
Transitioning from backup power mode to feeding energy into the grid 45
Backup power and energy saving mode 46
Automatic switch to backup power including backup power circuits and 1-pin separation, e.g. Austria or Australia 47
Functions 47
Transitioning from feeding energy into the grid to backup power mode 47
Transitioning from backup power mode to feeding energy into the grid 47
Automatic switch to backup power all-pin separation, e.g. Germany, France, UK, Spain 48
Functions 48
Transitioning from feeding energy into the grid to backup power mode 48
Transitioning from backup power mode to feeding energy into the grid 49
Automatic switch to backup power all-pin separation, Italy 50
Functions 50
Transitioning from feeding energy into the grid to backup power mode 50
Transitioning from backup power mode to feeding energy into the grid 51
Manual switch to backup power 1-pin separation, e.g. Australia / 2-pin separation, e.g. Germany 52
Functions 52
Transitioning from feeding energy into the grid to backup power mode 52
Transitioning from backup power mode to feeding energy into the grid 53

Installation 55

General 57
Quick-lock system 57
Warning notices on the device 57
System component compatibility 59
Installation location and position 60
Choosing the location of the inverter 60
Choosing the location of third-party batteries 61
Installation position of inverter 62
Install the mounting bracket and hang up the inverter 64
Selecting the fixing material 64
Properties of the mounting bracket 64
Do not deform the mounting bracket 64
Fitting the mounting bracket to a wall 64
Installing the mounting bracket on a mast or beam 65
Attaching the mounting bracket to mounting rails 66
Attaching the inverter to the mounting bracket 66
Prerequisites for connecting the inverter 67
Different cable types 67
Permissible cables for the electrical connection 67
Permissible cables for the data communication connection 68
Cable diameter of the AC cable 69

Cable diameter of the DC cable 69
Maximum alternating current fuse protection 69
Connecting the inverter to the public grid (AC side) 71
Safety 71
Connecting the inverter to the public grid (AC side) 71
Connecting solar module strings to the inverter 74
General comments regarding PV modules 74
Safety 74
Module array - general information 75
Module array configuration 3 - 6 kW 75
Connecting the solar module strings to the inverter 76
Connecting the battery to the inverter 80
Safety 80
Connecting the battery on the DC side 80
Connecting the LG FLEX ground conductor 84
Connecting backup power - PV Point (OP) 85
Safety 85
Installation 85
Testing backup power mode 89
Connecting backup power - Full Backup 90
Safety 90
Automatic switch to backup power 1-pin separation, e.g. Austria or Australia 90
Automatic switch to backup power 2-pin separation, e.g. Germany, France, UK, Spain 91
Automatic switch to backup power 2-pin double separation with ext. grid and system protection - e.g. Italy 92
Manual switch to backup power 1-pin separation, e.g. Australia / 2-pin separation, e.g. Germany 92
Testing backup power mode 94
Connecting the data communication cable 95
Modbus participants 95
Routing data communication cables 96
Connecting the battery communication cable 98
Terminating resistors 98
Installing the WSD (wired shutdown) 100
Closing and commissioning the inverter 101
Closing the inverter's connection area/housing cover, and commissioning 101
Starting the inverter for the first time 101
Installation with the app 102
Installation using the web browser 102
Switching off current supply and restarting the inverter 104
De-energising the inverter and switching it on again 104

Settings - user interface of the inverter **105**

User settings 107
User login 107
Selecting the language 107
Device configuration 108
Components 108
Functions andI/Os 109
Demand Response Modes (DRM) 110
Inverter 110
Energy management 113
Maximum permitted battery charging from the public grid 113
Energy management 113
Examples - Time-dependent battery control 114
Allowed battery control rules 116
PV power reduction 118
Load management 118
System 120
General 120
Update 120

Setup wizard 120
Restoring the factory settings 120
Event Log 120
Information 120
License Manager 121
Support 122
Communication 123
Network 123
Modbus 124
Remote control 126
Fronius Solar API 126
Internet Services 126
Safety and grid requirements 127
Country setup 127
Requesting inverter codes in Solar.SOS 127
Feed-in limitation 128
Dynamic power regulation with several inverters 129
I/O power management 132
Connection diagram - 4 relay 133
I/O power management settings - 4 relays 134
Connection diagram - 3 relay 135
I/O power management settings - 3 relays 136
Connection diagram - 2 relay 137
I/O power management settings - 2 relays 138
Connection diagram - 1 relay 139
I/O power management settings - 1 relay 140
Connecting a ripple control receiver to multiple inverters 140
Autotest (CEI 0-21) 141

Options **143**

Surge protective device (SPD) 145
General 145
Safety 145
Scope of supply 145
De-energising the inverter 146
Installation 147
Commissioning the inverter 152
DC Connector Kit GEN24 154
General 154
General comments regarding PV modules 154
Safety 154
Scope of supply 155
De-energising the inverter 155
Installation 156
Commissioning the inverter 160
PV Point Comfort 161
Safety 161
Scope of supply 161
De-energising the inverter 162
Installation 163
Commissioning the inverter 169
Configuring PV Point Comfort 169
Testing backup power mode 170

Appendix **171**

Care, maintenance and disposal 173
General 173
Cleaning 173
Maintenance 173
Safety 173
Operation in dusty environments 173

Disposal 174
Guarantee provisions 176
Fronius manufacturer's warranty 176
Components for switching to backup power 177
Components for automatic Full Backup backup power changeover 177
Components for manual Full Backup backup power changeover 178
Status codes and remedy 180
Display 180
Status Codes 180
Technical data 182
Fronius Primo GEN24 3.0 / 3.0 Plus 182
Fronius Primo GEN24 3.6 / 3.6 Plus 185
Fronius Primo GEN24 4.0 / 4.0 Plus 189
Fronius Primo GEN24 4.6 / 4.6 Plus 192
Fronius Primo GEN24 5.0 / 5.0 Plus 196
Fronius Primo GEN24 6.0 / 6.0 Plus 200
WLAN 203
Technical data of surge protective device DC SPD type 1+2 GEN24 204
Explanation of footnotes 204
Integrated DC disconnector 205

Circuit diagrams **207**

Fronius Primo GEN24 and BYD Battery-Box Premium HV 209
Circuit Diagram 209
Fronius Primo GEN24 with two BYD Battery-Box Premium HV connected in parallel 210
Circuit Diagram 210
Fronius Primo GEN24 with three BYD Battery-Box Premium HV connected in parallel 211
Circuit Diagram 211
Fronius Primo GEN24 and LG FLEX 212
Circuit Diagram 212
Circuit Diagram - PV Point (OP) 213
Circuit Diagram 213
Circuit Diagram - PV Point (OP) Australia 214
Circuit Diagram 214
Backup power terminal - PV Point (OP) with battery only for France 215
Circuit Diagram 215
Backup power terminal - PV Point (OP) manual changeover 216
Circuit Diagram 216
PV Point Comfort 217
Circuit Diagram 217
Automatic switch to backup power 1-pin single separation - e.g. Austria 218
Circuit Diagram 218
Automatic switch to backup power 1-pin single separation - e.g. Australia 219
Circuit Diagram 219
Automatic switch to backup power 2-pin single separation - e.g. Germany 220
Circuit Diagram 220
Automatic switch to backup power 2-pin single separation - e.g. France 221
Circuit Diagram 221
Automatic switch to backup power 2-pin single separation - e.g. UK 222
Circuit Diagram 222
Automatic switch to backup power 2-pin single separation - e.g. Spain 223
Circuit Diagram 223
Automatic switch to backup power 2-pin double separation with ext. grid and system protection - e.g. Italy 224
Circuit Diagram 224
Fronius Primo GEN24 with Enwitec Box 225
Circuit Diagram 225
Manual switch to backup power 1-pin separation, e.g. Australia 226
Circuit Diagram 226
Manual switch to backup power 2-pin separation, e.g. Germany 227
Circuit Diagram 227
Surge protective device (SPD) 228

Circuit Diagram 228

Dimensions of the inverter **229**

Fronius Primo GEN24 3 - 6 kW 231
Fronius Primo GEN24 3 - 6 kW 231

Safety rules

Explanation of safety notices

⚠ WARNING!

Indicates a potentially hazardous situation.

▶ Death or serious injury may result if appropriate precautions are not taken.

⚠ CAUTION!

Indicates a situation where damage could occur.

▶ If not avoided, minor injury and/or damage to property may result.

NOTE!

Indicates a risk of flawed results and possible damage to the equipment.

If you see any of the symbols depicted in the "Safety rules" chapter, special care is required.

Safety

⚠ CAUTION!

Danger from crushing due to the incorrect handling of attachments and connection parts.

Injuries to limbs may result.

▶ When lifting up, putting down and attaching the inverter, use the integrated grips.

▶ When fitting attachments, ensure that no limbs are located between the attachment and the inverter.

▶ Do not hold onto the individual poles on the terminals when locking and unlocking.

General

The device has been manufactured in line with the state of the art and according to recognised safety standards. In the event of incorrect operation or misuse, there is a risk of:

- Serious or fatal injury to the operator or third parties
- Damage to the device and other material assets belonging to the operating company

All personnel involved in commissioning, maintenance and servicing of the device must:

- Be suitably qualified
- Have knowledge of and experience in dealing with electrical installations
- Read and follow these Operating Instructions carefully

In addition to the Operating Instructions, all applicable local rules and regulations regarding accident prevention and environmental protection must also be followed.

All safety and danger notices on the device:
- Must be kept in a legible state
- Must not be damaged
- Must not be removed
- Must not be covered, pasted or painted over

Only operate the device when all protection devices are fully functional. If the protection devices are not fully functional, there is a risk of:
- Serious or fatal injury to the operator or third parties
- Damage to the device and other material assets belonging to the operating company

Any safety devices that are not fully functional must be repaired by an authorized specialist before the device is switched on.

Never bypass or disable protection devices.

For the location of the safety and danger notices on the device, refer to the chapter headed "Warning notices on the device" in the Operating Instructions for your device.

Faults that could compromise safety must be remedied before switching on the device.

Environmental conditions

Operation or storage of the device outside the stipulated area will be deemed as not in accordance with the intended purpose. The manufacturer accepts no liability for any damage resulting from improper use.

Qualified personnel

The servicing information contained in these operating instructions is intended only for the use of qualified service engineers. An electric shock can be fatal. Do not carry out any actions other than those described in the documentation. This also applies to qualified personnel.

All cables and leads must be secured, undamaged, insulated and adequately dimensioned. Loose connections, scorched, damaged or inadequately dimensioned cables and leads must be immediately repaired by authorised personnel.

Maintenance and repair work must only be carried out by an authorised specialist.

It is impossible to guarantee that bought-in parts are designed and manufactured to meet the demands made on them, or that they satisfy safety requirements. Use only original spare parts (also applies to standard parts).

Do not carry out any alterations, installations, or modifications to the device without first obtaining the manufacturer's permission.

Components that are not in perfect condition must be changed immediately.

Noise emission values

The sound power level of the inverter is specified in the **Technical data**.

The device is cooled as quietly as possible with the aid of an electronic temperature control system; this depends on the amount of converted power, the ambient temperature, the level of soiling of the device, etc.

It is not possible to provide a workplace-related emission value for this device because the actual sound pressure level is heavily influenced by the installation

situation, the grid quality, the surrounding walls and the properties of the room in general.

EMC measures

In certain cases, even though a device complies with the standard limit values for emissions, it may affect the application area for which it was designed (e.g., when there is equipment that is susceptible to interference at the same location, or if the site where the device is installed is close to either radio or television receivers). If this is the case, then the operator is obliged to take action to rectify the situation.

Backup power

This system has backup power functions, which enable a replacement power supply to be established in the event of a failure of the public grid.

Where an automatic backup power supply is installed, a **backup power warning notice** (https://www.fronius.com/en/search-page, item number: 42,0409,0275) must be fitted on the electrical distributor.

Maintenance and installation work in the home network requires both disconnection on the utility side and deactivation of the replacement power mode by opening the integrated DC disconnector on the inverter.

The function of the residual current devices for the backup power supply must be checked at regular intervals (according to the manufacturer's instructions), but at least twice a year.
A description on how to perform the test operation can be found in the **backup power checklist** (https://www.fronius.com/en/search-page, item number: 42,0426,0365).

Depending on the insolation conditions and the battery state of charge, the backup power supply is automatically deactivated and activated. This can cause the backup power supply to unexpectedly return from standby mode. Therefore, installation work can only be performed on the home network when the backup power supply is deactivated.

Influencing factors on the total power in backup power mode:

Reactive power
Electrical loads with a power factor not equal to 1 also require reactive power in addition to effective power. The reactive power also loads the inverter. Therefore, to correctly calculate the actual total power, it is not the rated power of the load that is relevant, but the current caused by effective and reactive power.

Devices with a high reactive power are mainly electric motors such as:
- Water pumps
- Circular saws
- Blowers and fans

High starting current
Electrical loads that need to accelerate a large mass usually require a high starting current. This can be up to 10 times higher than the nominal current. The maximum current of the inverter is available for the starting current. Loads with too high starting currents therefore cannot be started/operated, even though the nominal power of the inverter suggests that they can. When dimensioning of the backup power circuit, the connected load power and any starting current must also be taken into account.

Devices with high starting currents are, for example:

- Devices with electric motors (e.g. lifting platform, circular saws, planing bench)
- Devices with large transmission ratio and flywheel mass
- Devices with compressors (e.g. compressed air compressors, air conditioning systems)

IMPORTANT!
Very high starting currents can cause short-term distortion or a drop in output voltage. The simultaneous operation of electronic devices in the same backup power supply system should be avoided.

IMPORTANT!
The inverter may only be operated within the limits of its technical capabilities. Operation outside of its technical capabilities can cause the inverter to shut down.

Data protection

The user is responsible for the safekeeping of any changes made to the factory settings. The manufacturer accepts no liability for any deleted personal settings.

Copyright

Copyright of these operating instructions remains with the manufacturer.

The text and illustrations are all technically correct at the time of printing. We reserve the right to make changes. The contents of the operating instructions shall not provide the basis for any claims whatsoever on the part of the purchaser. If you have any suggestions for improvement, or can point out any mistakes that you have found in the instructions, we will be most grateful for your comments.

Protective earthing (PE)

Connection of a point in the device, system or installation to earth to protect against electric shock in the event of a fault. When installing a safety class 1 inverter (see **Technical data**), the ground conductor connection is required.

When connecting the ground conductor, ensure that it is secured against accidental disconnection. All the points listed in **Connecting the inverter to the public grid (AC side)** on page **71** must be observed. When using cable glands, ensure that the ground conductor will be strained last in the event of failure of the cable gland. When connecting the ground conductor, the minimum cross-section requirements specified by the respective national standards and guidelines must be observed.

General information

Fronius Primo GEN24

Device concept

The inverter transforms the direct current generated by the solar modules into alternating current. This alternating current is fed into the public grid and synchronized with the grid voltage in use. Moreover, the solar energy can also be stored in a connected battery for later use.

The inverter is intended for use in grid-connected photovoltaic systems. The inverter has backup power functions and switches to backup power mode if it has been wired accordingly*.

The inverter automatically monitors the public grid. Whenever conditions in the electric grid are inconsistent with standard conditions (for example, grid switch-off, interruption), the inverter will immediately stop producing power and interrupt the supply of power into the grid.
The grid is monitored by monitoring the voltage, frequency and islanding conditions.

After installation and commissioning, the inverter's operation is fully automatic; the inverter draws the maximum possible power from the PV modules.
Depending on the operating point, this power is used in the home, stored in a battery* or fed into the grid.

As soon as the energy provided by the PV modules is no longer sufficient, the power from the battery is fed into the home. Depending on the setting, power may also be obtained from the public grid in order to charge the battery*.

When its temperature gets too high, the inverter automatically reduces the output or charging power, or switches off completely, in order to protect itself. Reasons for the temperature being too high include a high ambient temperature or insufficient heat dissipation (for example, inadequate heat dissipation when installed in switch cabinets).

* Depending on the device variant, suitable battery, appropriate wiring, settings and local standards and guidelines.

Function overview

Function	Primo GEN24	Primo GEN24 Plus
Backup power variant - PV Point (OP)	✓	✓
Battery connection*	Available as an option**	✓
Backup power variant - Full Backup	Available as an option**	✓

* For suitable batteries, see chapter **Suitable batteries**.

** The functions are optionally available via Fronius UP (see chapter **Fronius UP**).

Fronius UP

With Fronius UP*, the inverter can be expanded by the authorised specialist to include optionally available functions (see chapter **Function overview**).

* The availability of Fronius UP varies from country to country. For more information on Fronius UP and availability, see **Installation guide: Fronius GEN24 & GEN24 Plus.**

Scope of supply

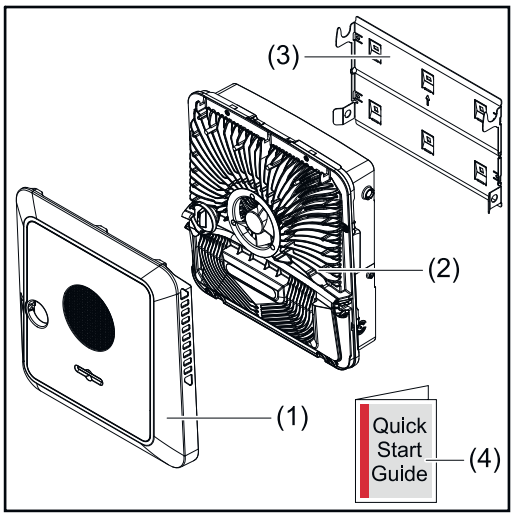

(1) Housing cover
(2) Inverter
(3) Mounting bracket (illustration)
(4) Quick Start guide

Intended use

The inverter is designed to convert direct current from PV modules into alternating current and feed this power into the public grid. A backup power mode* is possible provided that appropriate cabling has been installed.

The following are considered improper use:
- Utilisation for any other purpose, or in any other manner
- Alterations to the inverter are not permitted unless expressly recommended by Fronius
- Installation of components is not permitted unless expressly recommended or sold by Fronius

The manufacturer is not responsible for any damage resulting from improper use. All warranty claims are considered void in such cases.

Intended use also means:
- Carefully reading and obeying all the instructions, as well as safety and danger notices in the Operating Instructions
- Installation in accordance with chapter "**Installation**" from page **55**.

When designing the photovoltaic system, ensure that all components of the photovoltaic system are operated exclusively within their permissible operating range.

Take into account the grid operator's regulations for energy fed into the grid and connection methods.

The Fronius GEN24 inverter is a grid-connected inverter with a backup power function – it is not a stand-alone inverter. The following restrictions must therefore be observed in backup power mode:

- Backup power mode may be in operation for at max. 2000 hours
- Backup power mode may be in operation for more than 2000 operating hours if 20% of the duration of the inverter's grid power feed operation is not exceeded at the relevant time.

* Depending on the device variant, suitable battery, appropriate wiring, settings, and local standards and guidelines.

Thermal concept

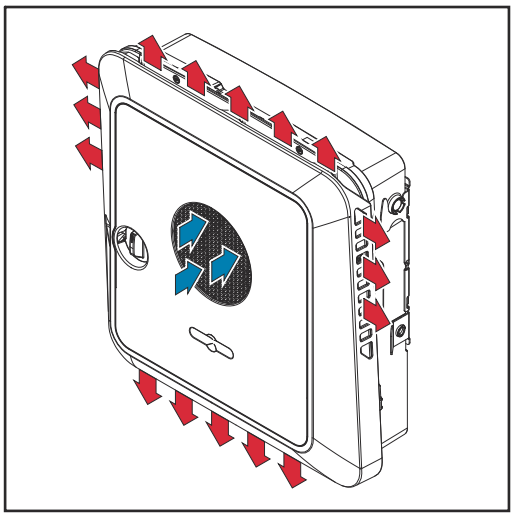

Ambient air is drawn in by the fan on the front side and blown out at the device sides. The even heat dissipation allows several inverters to be installed next to each other.

NOTE!

Risk due to insufficient cooling of the inverter.
This may result in a loss of power in the inverter.

▶ Do not block the fan (for example, with objects that protrude through the touch guard).
▶ Do not cover the ventilation slots, even partially.
▶ Make sure that the ambient air can always flow through the inverter's ventilation slots unimpeded.

Fronius Solar.web

With Fronius Solar.web or Fronius Solar.web Premium, the PV system can be easily monitored and analysed by the system owner and installer. If configured accordingly, the inverter transmits data such as power, yields, load, and energy balance to Fronius Solar.web. For more information see **Solar.web - monitoring & analysis**.

Configuration is carried out via the setup wizard, see chapter **Installation with the app** on page **102** or **Installation using the web browser** on page **102**.

Prerequisites for configuration:

- Internet connection (download: min. 512 kBit/s, upload: min. 256 kBit/s)*.
- User account on **solarweb.com**.
- Completed configuration via the setup wizard.

* The information given does not constitute an absolute guarantee of faultless function. High error rates in the transmission, reception fluctuations or transmission drop-outs can have a negative effect on the data transfer.

Fronius recommends testing the Internet connection on site according to the minimum requirements.

Local communication

The inverter can be found via the Multicast DNS protocol (mDNS). It is recommended to search for the inverter by the assigned host name.

The following data can be retrieved via mDNS:
- NominalPower
- Systemname
- DeviceSerialNumber
- SoftwareBundleVersion

The various operating modes

Operating modes – Explanation of symbols

PV module
generates direct current

Fronius GEN24 inverter
converts direct current into alternating current and charges the battery (a battery support is required to charge the battery, see **Function overview** on page**15**). The integrated system monitoring enables the inverter to be integrated into a network by means of WLAN.

Additional inverter in the system
converts the direct current into alternating current. However, it cannot charge a battery, and is not available in backup power mode.

Battery
is coupled to the inverter on the direct current side, and stores electrical energy.

Fronius Ohmpilot
to use excess energy to heat water.

Primary meter
records the system's load curve and provides measurement data for energy profiling in Fronius Solar.web. The primary meter also controls the dynamic feed-in control.

Secondary meter
records the load curve of individual loads (e.g. washing machine, lamps, TV, heat pump, etc.) in the consumption branch and provides measurement data for energy profiling in Fronius Solar.web.

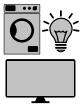

Loads in the system
are the loads connected in the system.

Additional loads and producers in the system
are connected to the system by means of a Smart Meter.

PV Point
is a non-uninterruptible 1-phase backup power circuit that supplies electrical devices with up to 3 kW if sufficient power is available from the PV modules or the battery.

Full Backup
the inverter is prepared for backup power mode. The backup power mode must be implemented in the switch cabinet by the electrician performing the installation. The PV system operates in a stand-alone manner in backup power mode.

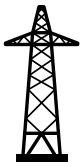

Grid
supplies the loads in the system if insufficient power is being generated by the PV modules or supplied by the battery.

Operating mode – Inverter with battery

In order to be able to obtain the highest rate of self-consumption with your PV system, a battery can be used to store excess energy. The battery is coupled to the inverter on the direct current side. Multiple current conversion is therefore not required, and the efficiency is increased.

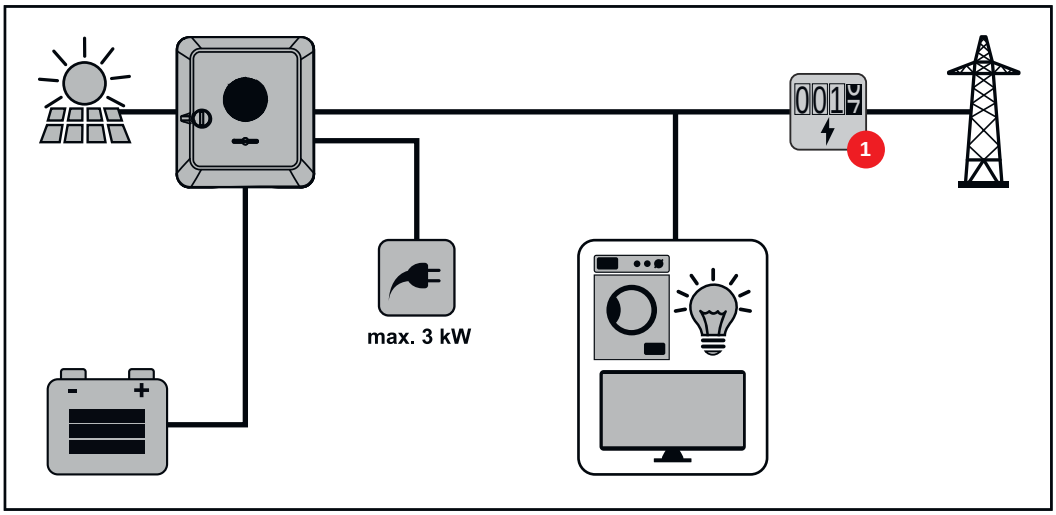

Operating mode – Inverter with battery and several Smart Meters

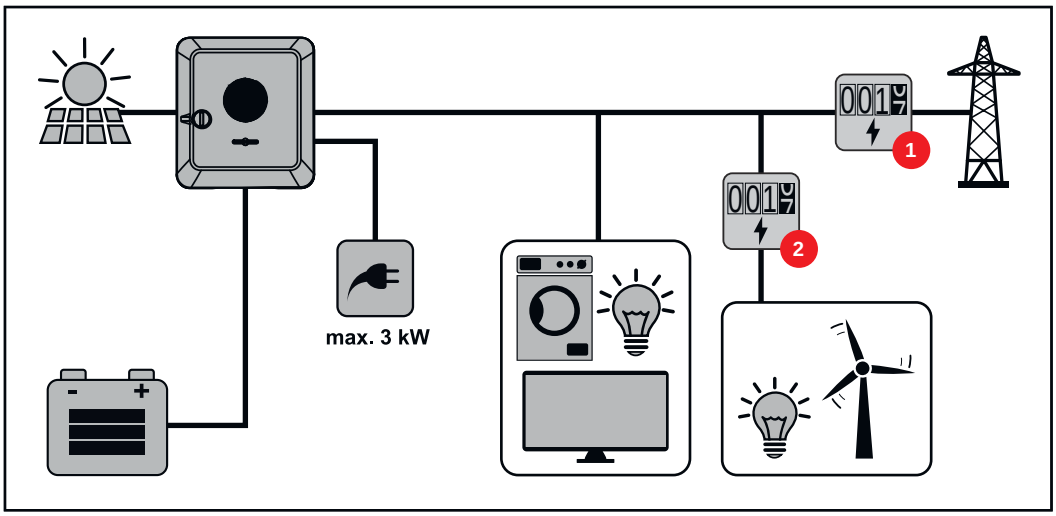

Operating mode - inverter with battery, AC-coupled to another inverter

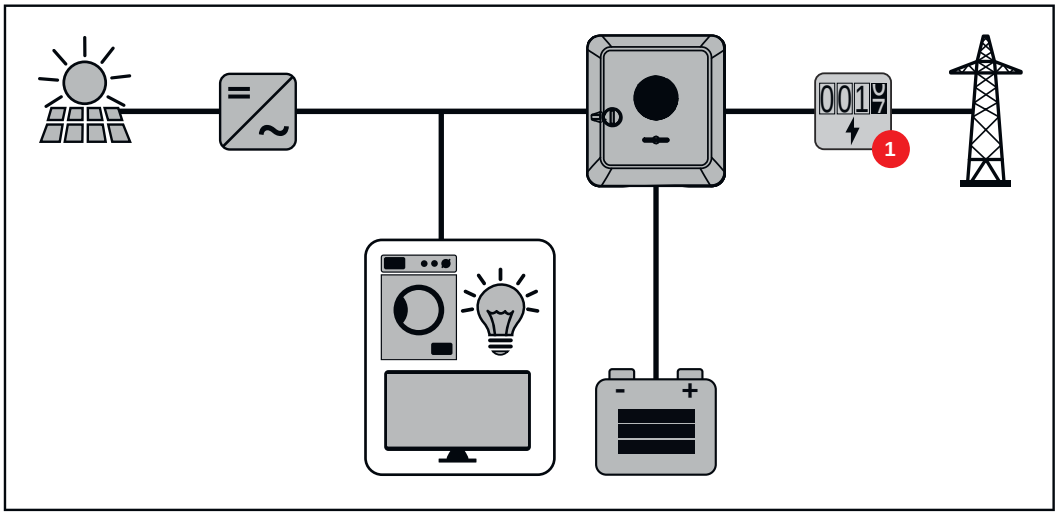

Operating mode – Inverter with battery and backup power function

IMPORTANT!
In backup power mode, an increased nominal frequency is used in order to prevent undesired parallel operation with other power generators.

In the fully equipped hybrid PV system, the inverter can:
- Supply loads in the house
- Store excess energy in the battery and/or feed it into the grid
- Supply connected loads in the event of a power failure

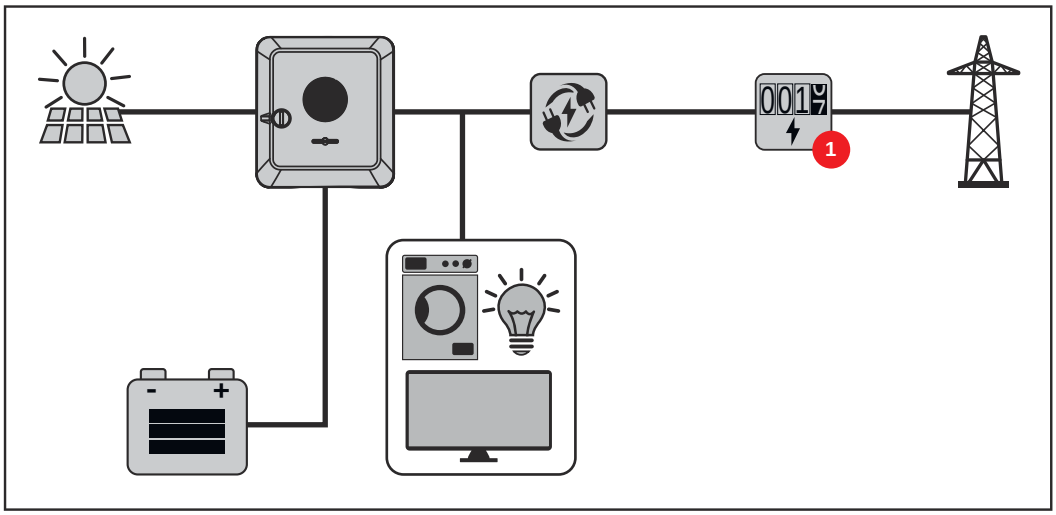

Operating mode – Inverter with battery, Ohmpilot and backup power function

IMPORTANT!
In the fully equipped hybrid PV system with a Fronius Ohmpilot, the Ohmpilot cannot be operated in the event of a power failure for regulatory reasons. It is therefore sensible to install the Ohmpilot outside of the backup power branch.

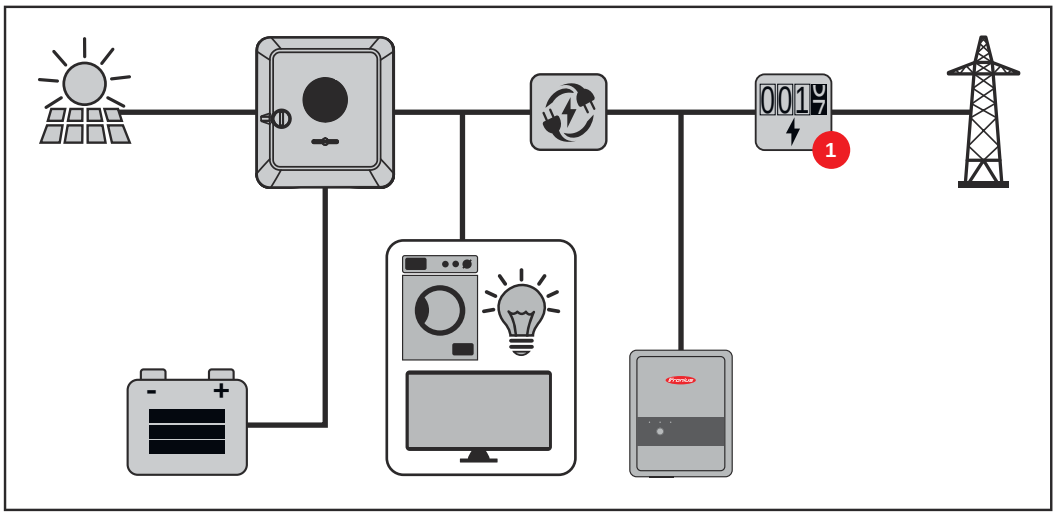

Operating mode – Inverter with battery, further inverter and backup power function

In the hybrid photovoltaic system, batteries must only be connected to one inverter with battery support. Batteries cannot be split between multiple inverters with battery support. However, depending on the battery manufacturer, several batteries can be combined on one inverter.

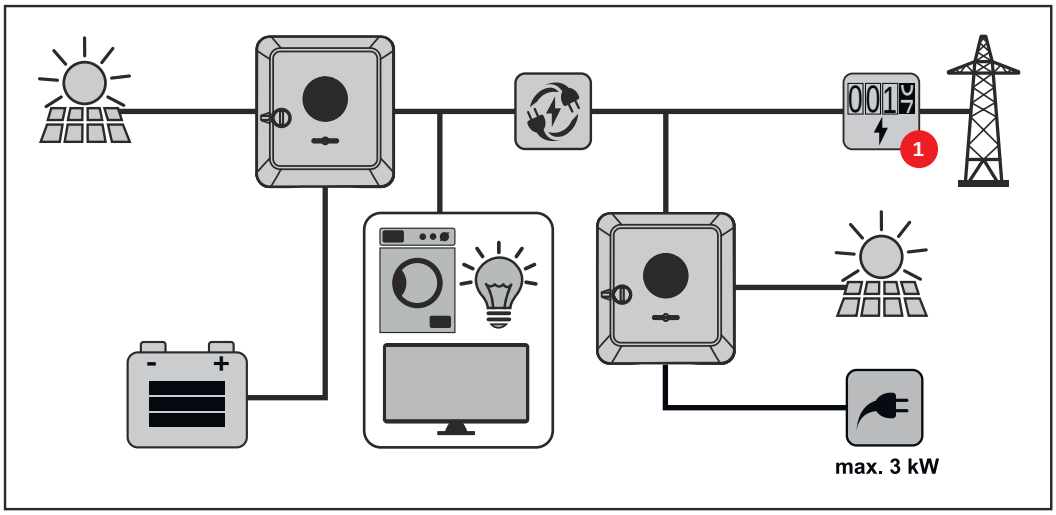

Energy flow direction of the inverter

In the case of hybrid inverters, there are four different energy flow directions:

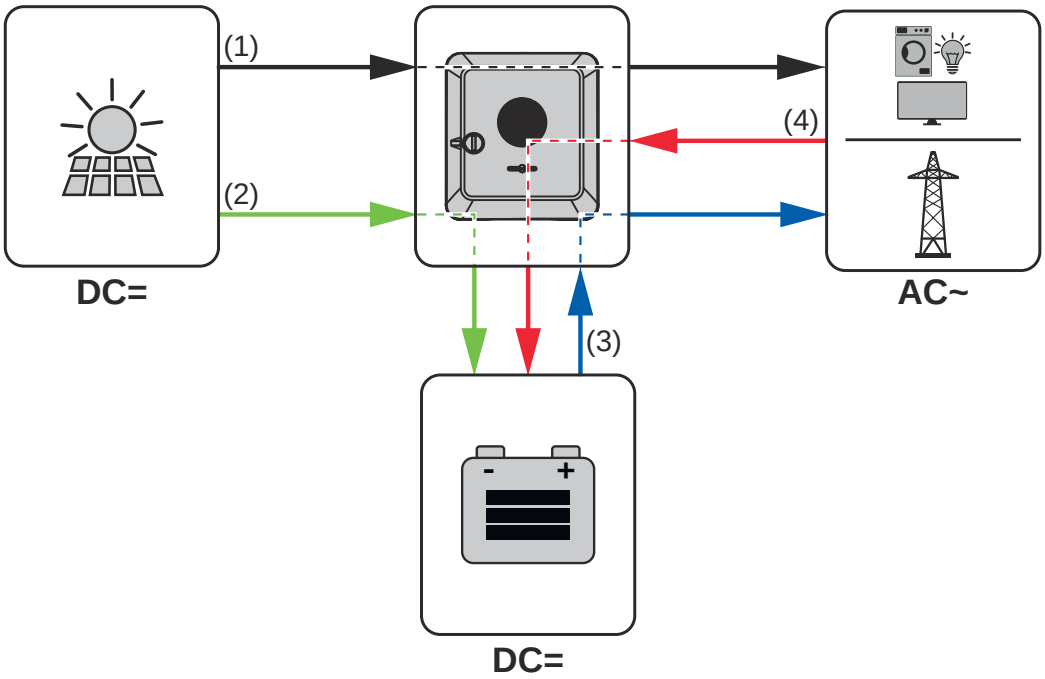

(1) PV module – inverter – load/grid
(2) PV module – inverter – battery*
(3) Battery – inverter – load/grid*
(4) Grid – inverter – battery*

* depending on the settings and local standards and regulations.

Operating states (only for systems with a battery)

Battery systems distinguish different operating states. In this case, the relevant current operating state is displayed on the user interface of the inverter or in Solar.web.

Operating state	Description
Normal operation	Energy is stored or drawn, as required.

Operating state	Description
Min. state of charge (SOC) achieved	Battery has reached the minimum SOC set or specified by the manufacturer. The battery cannot be discharged any further.
Energy saving mode (standby)	The system has been put into energy saving mode. Energy saving mode is automatically ended as soon as sufficient excess energy is available again.
Start	The storage system starts from energy saving mode (standby).
Forced re-charging	The inverter re-charges the battery, in order to maintain the set minimum SOC (state of charge) or the SOC specified by the manufacturer (protection against deep discharge).
Deactivated	The battery is not active. It has either been deactivated/switched off, or an error means that no communication with the battery is possible.

Energy saving mode

General

Energy saving mode (standby mode) is used to reduce the self-consumption of the system. Both the inverter and the battery automatically switch to energy saving mode under certain conditions.

The inverter switches to energy saving mode if the battery is flat and no PV power is available. Only the inverter's communication with the Fronius Smart Meter and Fronius Solar.web is maintained.

Switch-off conditions

If all the switch-off conditions are met, the battery switches into energy saving mode within ten minutes. This time delay ensures that the inverter can at least be restarted.

≤ min. SoC	The battery state of charge is less than or equal to the input minimum state of charge.
< 100 W	The current charging or discharging power of the battery is less than 100 W.
< 50 W	Less than 50 W is available for charging the battery. The power of feeding into the public grid is at least 50 W less than the power currently required in the home network.

The inverter automatically switches into energy saving mode, following the battery.

Switch-on conditions

If one of the following conditions is met for at least 30 seconds, energy saving mode is ended:

- Energy saving mode is no longer permissible owing to a changed setting on the user interface of the inverter.
- If dynamic power reduction of 0 is set, or if the system is operating in backup power mode, the power of feeding into the public grid is always less than the required power in the home network.
  There is a separate condition for this case (dynamic power reduction < 300 W or active backup power mode):
  - If the PV power is above a specified threshold, energy saving mode is ended.
- Battery charging from the public grid is requested via the user interface of the inverter.
- The battery is being recharged in order to restore the minimum state of charge or perform calibration.

Special case

If the inverter does not operate for 12 minutes (e.g. fault), or there is an interruption in the electrical connection between the inverter and the battery and there is no backup power mode, the battery switches to energy-saving mode in any case. This reduces self discharge of the battery.

Indication of energy saving mode

During energy saving mode:

- Operating LED for the inverter lights up orange (see **Button functions and LED status indicator** on page **35**).
- The user interface of the inverter can be reached.
- All the available data is saved and transmitted to Solar.web.
- The real-time data can be seen on Solar.web.

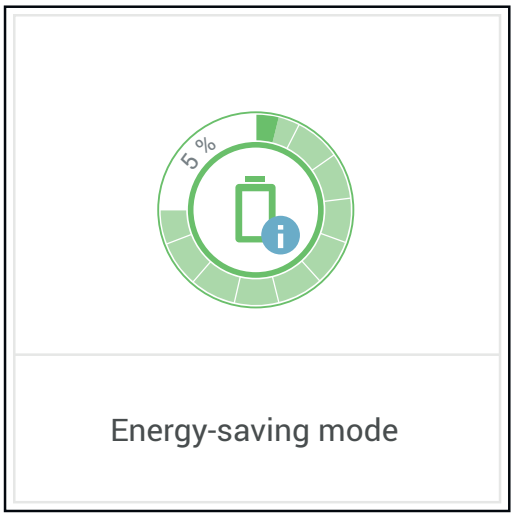

Energy saving mode is shown on the user interface of the inverter and in Solar.web by an "i" beside the battery symbol in the system overview.

Suitable batteries

General

Fronius explicitly points out that the third-party batteries are not Fronius products. Fronius is not the manufacturer, distributor or retailer of these batteries. Fronius accepts no liability and offers no service or guarantees for these batteries.

Obsolete firmware/software states may lead to incompatibilities between the inverter and the battery. In this case, the following steps are to be performed:

1. Update battery software – see the battery documentation.
2. Update inverter firmware – see **Update** on page **120**.

Read this document and the Installation Instructions before installing and commissioning the external battery. The documentation is either enclosed with the external battery or can be obtained from the battery manufacturer or their service partners

All documents associated with the inverter can be found at the following address:

https://www.fronius.com/en/solar-energy/installers-partners/service-support/tech-support

Limitations in operation

If the DC voltage exceeds 520 V, the battery can no longer be charged or discharged. The voltage of 520 V is rarely exceeded during normal operation of the inverter.

When the output power of the inverter is reduced, the operating point shifts towards higher DC voltages. The following conditions during normal operation can lead to the DC voltage of 520 V being exceeded:

- Overdimensioning of the PV generator.
- Feed-in limitation (e.g. zero feed-in).
- Specifications of the grid operator (e.g. mains voltage-dependent power reduction).
- Backup power mode. If the 520 V voltage is exceeded during backup power, backup power operation may be restricted. Therefore, an open circuit voltage of max. 520 V is recommended.

BYD Battery-Box Premium

BYD Battery-Box Premium HVS	5.1	7.7	10.2	12.8
Number of battery modules	2	3	4	5
Fronius Primo GEN24 *	✓	✓	✗	✗
Fronius Primo GEN24 Plus	✓	✓	✗	✗
Battery parallel operation**	✓	✓	✗	✗

BYD Battery-Box Premium HVM	8.3	11.0	13.8	16.6	19.3	22.1
Number of battery modules	3	4	5	6	7	8

BYD Battery-Box Premium HVM	8.3	11.0	13.8	16.6	19.3	22.1
Fronius Primo GEN24 *	✗	✓	✓	✓	✓	✗
Fronius Primo GEN24 Plus	✗	✓	✓	✓	✓	✗
Battery parallel operation**	✗	✓	✓	✓	✓	✗

* Battery support optionally available.

** Max. 3 batteries with the same capacity can be combined.

IMPORTANT!
According to the manufacturer's specifications, the max. DC cable length is 20 m. More detailed information can be found in the manufacturer's documents.

IMPORTANT!
To ensure reliable operation with a BYD Battery-Box Premium, the following switch-on sequence for the system must always be observed.

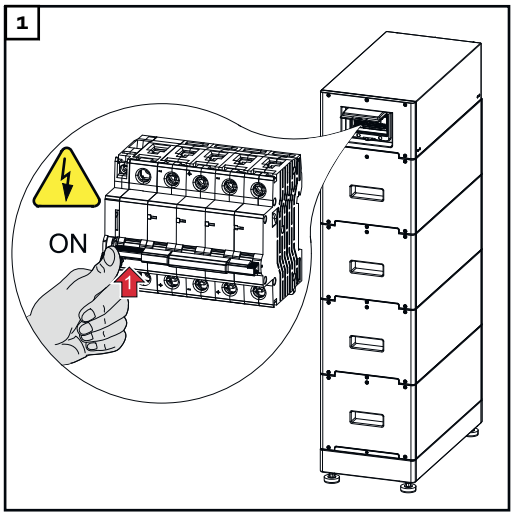

Switch on the battery.

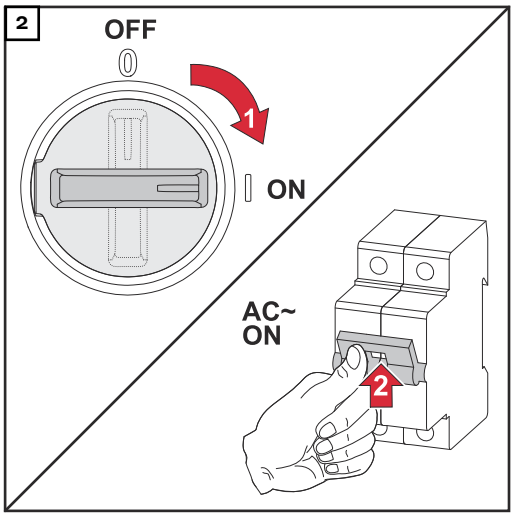

Set the DC disconnector to the "On" switch position. Switch on the automatic circuit breaker.

LG FLEX

LG FLEX	8.6	12.9	17.2
Number of battery modules	2	3	4

LG FLEX	8.6	12.9	17.2
Fronius Primo GEN24 *	✓	✓	✗
Fronius Primo GEN24 Plus	✓	✓	✗

* Battery support optionally available.

IMPORTANT!
According to the manufacturer's specifications, the max. DC cable length is 30 m. More detailed information can be found in the manufacturer's documents.

Switching on the battery

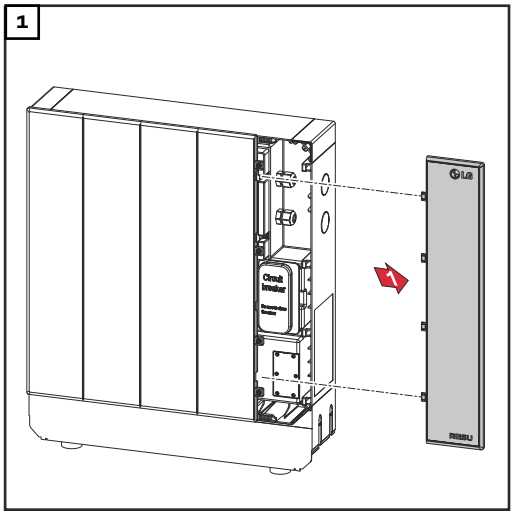

Pull off the cover to the right.

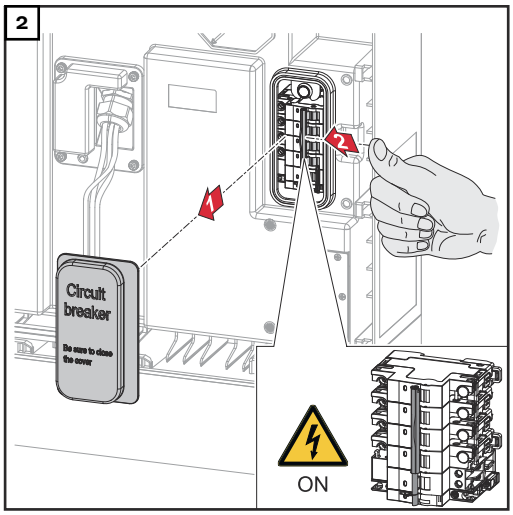

Pull off the cover of the DC disconnector to the front. Set the DC disconnector to the "On" switch position.

To refit the battery, follow the steps listed above in reverse order.

Manual system start

Requirements	There is no energy available from the PV modules or from the public grid. If backup power operation or battery operation are not possible (e.g. deep discharge protection of the battery), the inverter and battery switch off.
Notification of system shutdown	Status codes about the inactive state of the battery are displayed on the user interface of the inverter or sent via Solar.web by means of SMS or e-mail (only if notification via Solar.web is configured accordingly).
Manual battery start after system shutdown	As soon as energy is available again, the inverter starts operation automatically; however the battery must be started manually. The switch-on sequence must be observed for this, see chapter **Suitable batteries** on page **26**.
Starting backup power operation after a system shutdown	The inverter requires energy from the battery to start backup power operation. This is done manually on the battery; further information on the power supply for restarting the inverter via the battery can be found in the battery manufacturer's Operating Instructions.

Protection of people and equipment

Central grid and system protection

The inverter offers the option to use the integrated AC relays as coupling switches in conjunction with a central grid and system protection unit (in accordance with VDE-AR-N 4105:2018:11 §6.4.1). For this purpose, the central trigger device (switch) must be integrated into the WSD chain as described in the chapter "WSD (Wired Shut Down)".

WSD (wired shutdown)

The wired shutdown (WSD) interrupts the inverter feeding energy into the grid if the trigger device (switch, e.g. emergency stop or fire alarm switch) has been activated.

If an inverter (secondary device) fails, it is bypassed and the other inverters continue operating. If a second inverter (secondary device) or the inverter (primary device) fails, the operation of the entire WSD chain is interrupted.

For installation, see **Installing the WSD (wired shutdown)** on page **100**.

RCMU

The inverter is equipped with a universal current-sensitive residual current monitoring unit (RCMU = Residual Current Monitoring Unit) in accordance with IEC 62109-2 and IEC63112.
This device monitors residual currents from the PV module to the AC output of the inverter and disconnects the inverter from the grid in the event of unauthorised residual current.

Insulation monitoring

In the case of PV systems with ungrounded solar modules, the inverter checks the resistance between the positive or negative pole of the PV system and the ground potential before feeding energy into the grid. In the event of a short circuit between DC+ or DC- cable and ground (e.g. due to inadequately insulated DC cables or damaged solar modules), an infeed into the grid is prevented.

AFCI - Arc Fault Circuit Interrupter (Arc Guard)

AFCI (Arc Fault Circuit Interrupter) protects against arcing faults and in the narrower sense is a protection device against contact faults. The AFCI evaluates any DC-side faults that occur in the current and voltage curve with an electronic circuit and switches off the circuit when a contact fault is detected. This prevents overheating on poor contacts and ideally possible fires.

⚠ **CAUTION!**

Danger due to incorrect or unprofessional DC installation.
The result is risk of damage and in turn, risk of fire to the PV system due to inadmissible thermal loads that arise with an arc.

- ▶ Check plug connections are in good condition.
- ▶ Repair incorrect insulation as appropriate.
- ▶ Complete connections as per the specifications.

IMPORTANT!
Fronius will not accept any costs associated with production downtimes, installer

costs, etc., that may arise as the result of a detected arc and its consequences. Fronius accepts no liability for damage that can occur despite the presence of the integrated Arc Fault Circuit Interrupter/extinguishing system (e.g. caused by a parallel arc).

IMPORTANT!
Active PV module electronics (e.g., power optimiser) can impair the function of the Arc Fault Circuit Interrupter. Fronius does not guarantee that the Arc Fault Circuit Interrupter will work correctly in combination with active PV module electronics.

Reconnection behaviour
After detection of an arc, feeding energy into the grid is interrupted for at least 5 minutes. Depending on the configuration, feeding energy into the grid is then automatically resumed. If several arcs are detected within a period of 24 hours, feeding energy into the grid can also be permanently interrupted until a manual reconnection has taken place."

Safe state

If one of the following safety devices is triggered, the inverter switches to a safe state:
- WSD
- Isolation monitoring
- RCMU

In the safe state, the inverter no longer feeds energy in and is disconnected from the grid by opening the AC relays.

Surge protective device

The inverter is equipped with an integrated surge protective device on the DC and AC side in accordance with IEC 62109-2. The surge protective device protects the system against damage in the event of a surge.

Control elements and connections

Connection area

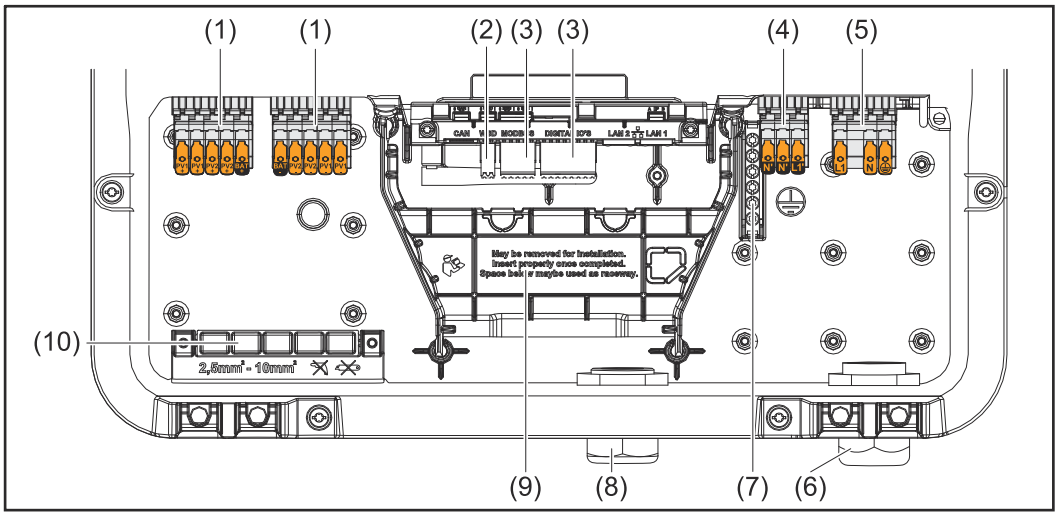

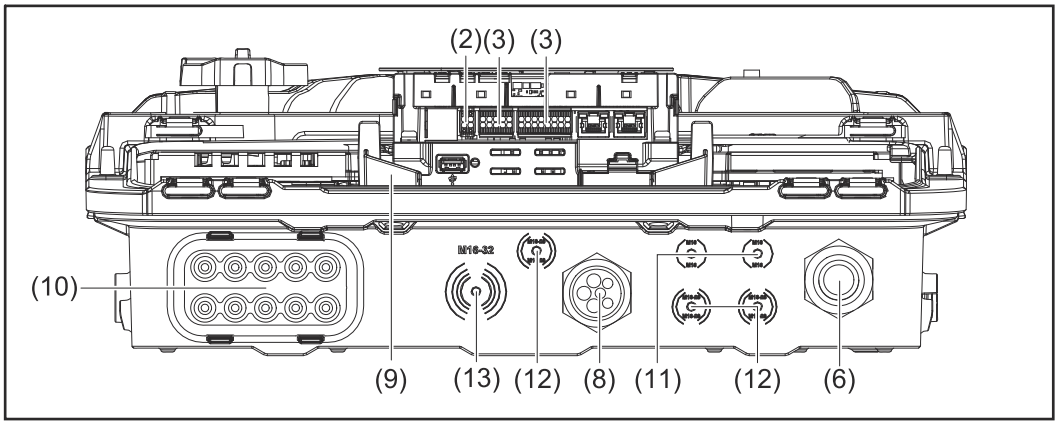

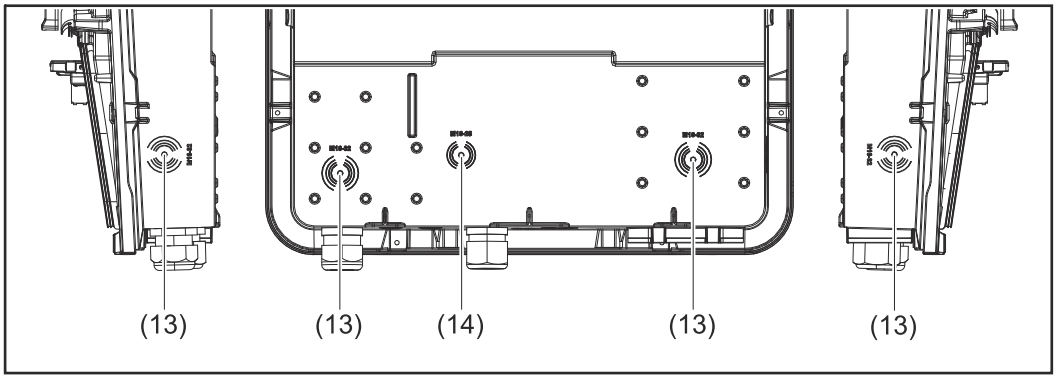

(1) 2x 5-pin DC push-in terminal
(2) Push-in WSD (wired shutdown) terminal
(3) Push-in terminals in the data communication area (Modbus, digital inputs and outputs)
(4) 3-pin push-in terminal for PV Point (OP)
(5) 3-pin AC push-in terminal
(6) Cable bushing/cable gland AC
(7) 6-pin ground electrode terminal
(8) Cable bushing/cable gland in the data communication area

(9) Connection area divider
(10) 10x DC cable bushings
(11) Optional cable bushing (M16)
(12) Optional cable bushing (M16 - M20)
(13) Optional cable bushing (M16 - M32)
(14) Optional cable bushing (M16 - M25)

Connection area divider

The connection area divider separates the high-voltage conductors (DC and AC) from the signal lines. To make it easier to reach the connection area, the divider can be removed for the connection work, and must be re-inserted.

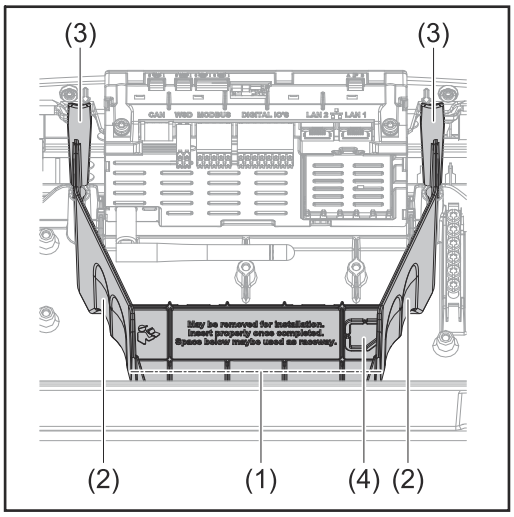

(1) Integrated cable duct
(2) Recesses for removing the connection area divider
(3) Snap tabs for locking/unlocking
(4) Defined breaking point for the Datcom connection

The integrated cable duct (1) allows for the lines to be laid from one area of the inverter to the other. As a result, multiple inverters can be easily installed next to each other.

Ground electrode terminal

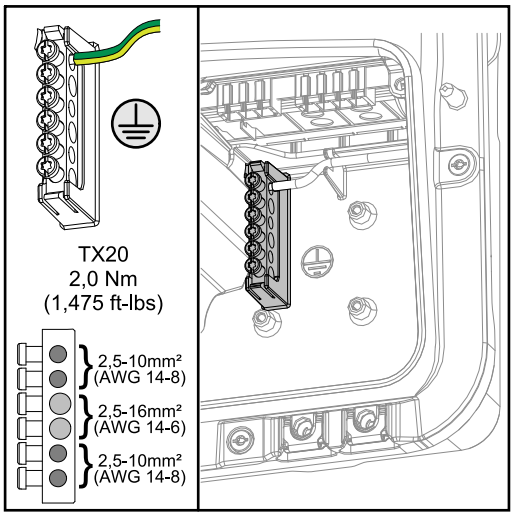

The ground electrode terminal ⏚ allows additional components to be earthed, such as:

- AC cable
- Module mounting system
- Ground rod

DC disconnector

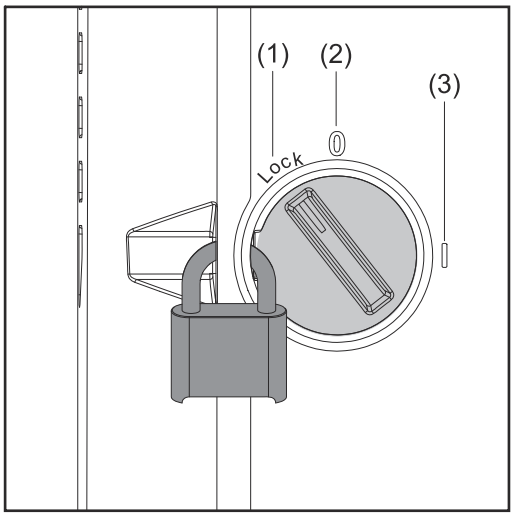

The DC disconnector has 3 switch settings:

(1) Locked/off (turned to the left)
(2) Off
(3) On

IMPORTANT!
In switch settings (1) and (3), a conventional padlock can be used to secure the inverter against being switched on/off. The national guidelines must be complied with in this respect.

Data communication area

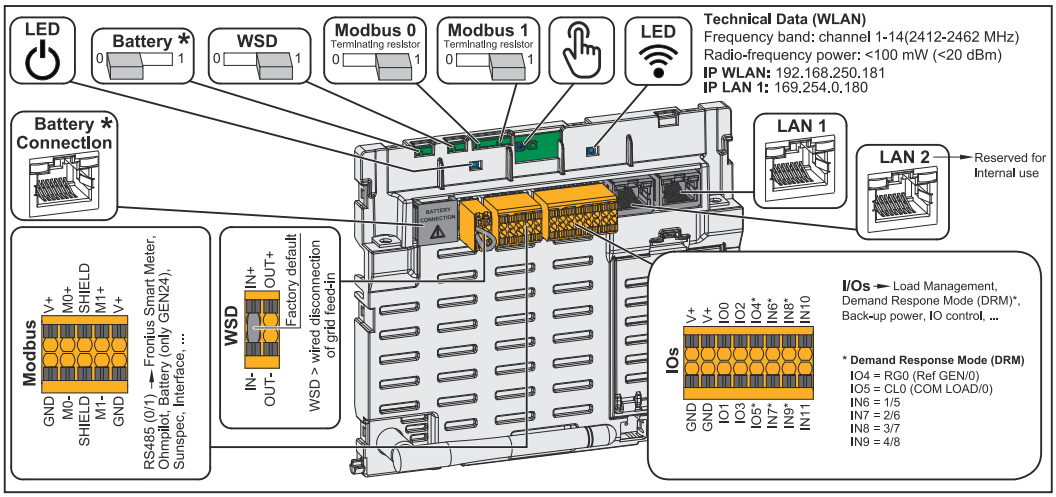

**Please not that the BAT (RJ45) interface is reserved for future use and not given at the moment.*

⏻ Operating status LED	Indicates the inverter operating status.
WSD (wired shutdown) switch	Defines the inverter as a WSD primary device or WSD secondary device. **Position 1:** WSD primary device **Position 0:** WSD secondary device
Modbus 0 (MB0) switch	Switches the terminating resistor for Modbus 0 (MB0) on/off. **Position 1:** Terminating resistor on (factory setting) **Position 0:** Terminating resistor off
Modbus 1 (MB1) switch	Switches the terminating resistor for Modbus 1 (MB1) on/off. **Position 1:** Terminating resistor on (factory setting) **Position 0:** Terminating resistor off

Optical sensor	To operate the inverter. See chapter **Button functions and LED status indicator** on page **35**.
Communication LED	Indicates the inverter connection status.
LAN 1	Ethernet connection for data communication (e.g. WLAN router, home network or for commissioning with a laptop see chapter **Installation using the web browser** on page **102**).
LAN 2	Reserved for future functions. Only use LAN 1 to avoid malfunctions.
I/Os terminal	Push-in terminal for digital inputs/outputs. See chapter **Permissible cables for the data communication connection** on page **68**. The designations (RG0, CL0, 1/5, 2/6, 3/7, 4/8) on the terminal refer to the Demand Response Mode function, see chapter **Functions andI/Os** on page **109**.
WSD terminal	Push-in terminal for the WSD installation. See chapter "**WSD (wired shutdown)**" on page **30**.
Modbus terminal	Push-in terminal for the installation of Modbus 0, Modbus 1, 12 V and GND (ground). The data connection to the connected components is established via the Modbus terminal. **The inputs M0 and M1 can be selected for this purpose.** Max. 4 Modbus participants per input, see chapter **Modbus participants** on page **95**.

Button functions and LED status indicator

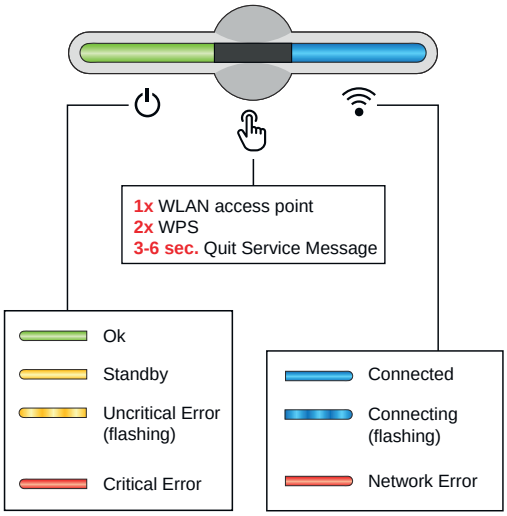

The status of the inverter is shown via the operating status LED. In the event of faults, carry out the individual steps in the Fronius Solar.start app.

The optical sensor is actuated by touching with a finger.

The status of the connection is shown via the communication LED. To establish the connection, carry out the individual steps in the Fronius Solar.start app.

Sensor functions	
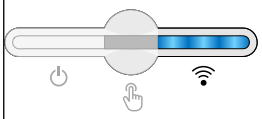	1x = WLAN Access Point (AP) is opened. Flashing blue
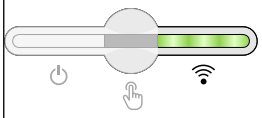	2x = WLAN Protected Setup (WPS) is activated. Flashing green
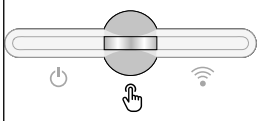	3 seconds (max. 6 seconds) = the service message is acknowledged. Flashing white (rapidly)

LED status indicator	
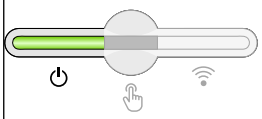	The inverter is operating correctly. Lights up green
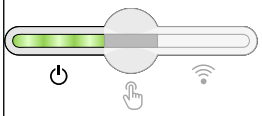	The inverter is performing the grid checks required by the applicable standards for feed-in mode. Flashing green
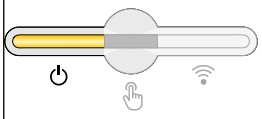	The inverter is in standby, is not operational (e.g. no feed-in at night) or is not configured. Lights up yellow
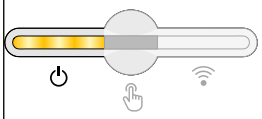	The inverter indicates a non-critical status. Flashing yellow
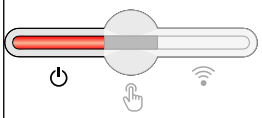	The inverter indicates a critical status and there is no grid power feed process. Lights up red
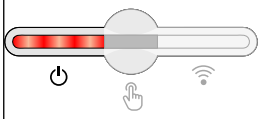	The inverter indicates a backup power overload. Flashing red
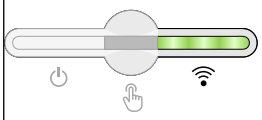	The network connection is being established via WPS. 2x = WPS search mode. Flashing green
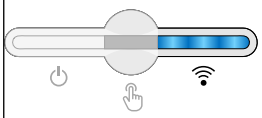	The network connection is being established via WLAN AP. 1x = WLAN AP search mode (active for 30 minutes). Flashing blue
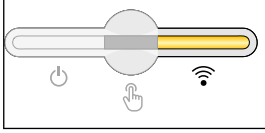	The network connection is not configured. Lights up yellow

LED status indicator	
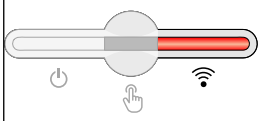	The inverter is operating correctly, a network fault is indicated. Lights up red
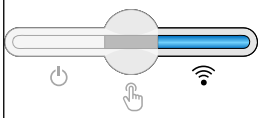	The network connection is active. Lights up blue
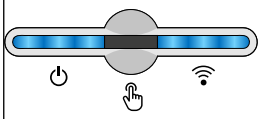	The inverter is performing an update. / Flashing blue
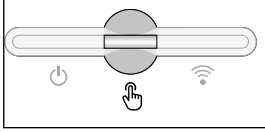	There is a service message. Lights up white

Internal schematic connection diagram of the IOs

On the V+/GND pin, it is possible to feed in a voltage of around 12.5–24 V (+ max. 20%) with an external power supply. The outputs IO 0–5 can then be operated with the external voltage. A maximum of 1 A can be drawn per output, with a maximum of 3 A allowed in total. The fuse protection must be located externally.

CAUTION!

Risk of polarity reversal at the terminals due to improper connection of external power supplies.
This may result in severe damage to the inverter.

- ▶ Check the polarity of the external power supply with a suitable measuring device before connecting it.
- ▶ Connect the cables to the V+/GND outputs with the correct polarity.

IMPORTANT!
If the total output (6 W) is exceeded, the inverter switches off the entire external power supply.

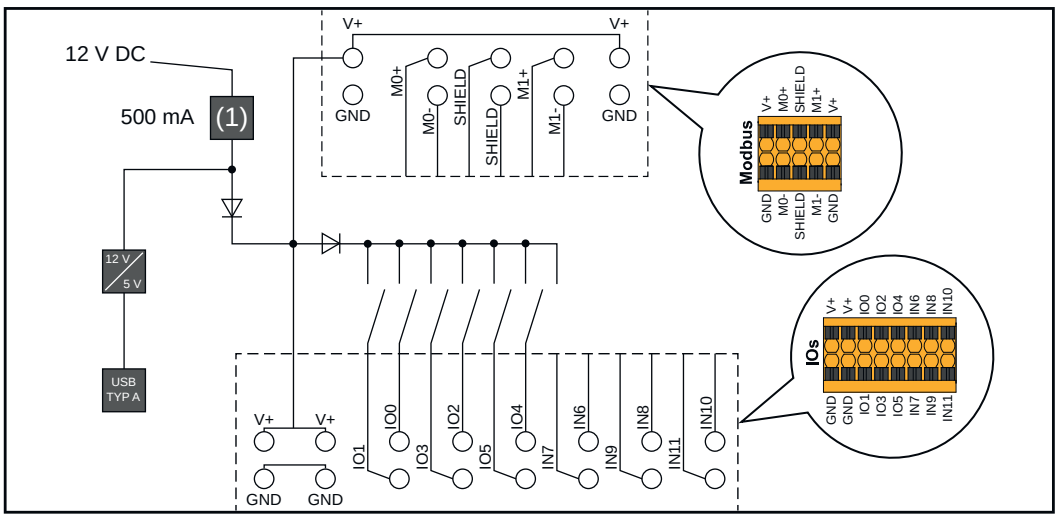

(1) Power limitation

Backup power variant - PV Point (OP)

General

Explanatory note - PV Point/PV Point Comfort

IMPORTANT!
If several backup power variants are available, please note that only one backup power variant may be installed and configured.

The inverter can provide 220 - 240 V at the PV Point/PV Point Comfort. A corresponding configuration must be set up during commissioning.

At 220 - 240 V output voltage, max. 13 A AC continuous current is available.

Example:
220 V *13 A = 2860 W
230 V *13 A = max. 3 kW

In backup power mode, some electrical appliances cannot function properly as starting currents are too high (for example, fridges and freezers). It is recommended to switch off non-essential loads during backup power mode. Overload capacity of 35 % is possible for a duration of 5 seconds, depending on the capacity of the PV modules and/or the battery at that moment in time.

There is a brief interruption when switching from grid-connected mode to backup power mode. For this reason, the backup power function cannot be used as an uninterruptible power supply, for example for computers.

If no energy from the battery or the PV modules is available in backup power mode, backup power mode ends automatically. If sufficient energy becomes available from the PV modules once again, backup power mode starts again automatically.

In the event of excessive consumption, backup power mode is stopped and the "backup power overload" status code is displayed on the inverter's LED status indicator (see **Button functions and LED status indicator** on page **35**). The maximum power in backup power mode according to the technical data must be observed.

PV Point (OP)

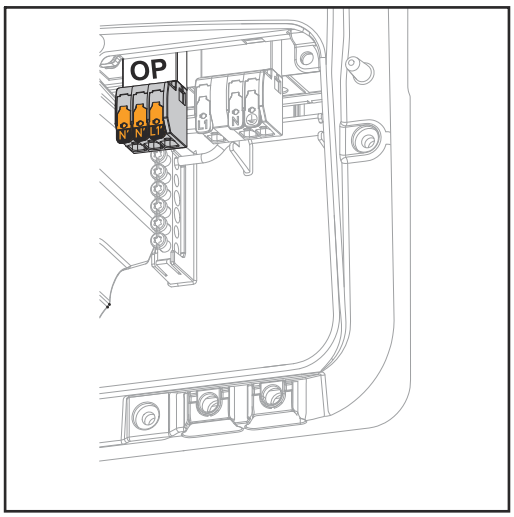

With the PV Point, in the event of a failure of the public grid, 1-phase electrical devices can be connected to the Opportunity Power (OP) terminal and supplied with a maximum power of 3 kW, if enough power is available from the PV modules or an optional battery. In grid-connected operation, the OP terminal is not supplied with voltage, therefore the connected loads will not be continuously supplied with power.

IMPORTANT!
A relay-based network switching setup is not possible.

Installation Instructions, see chapter **Connecting backup power - PV Point (OP)** on page **85**.

PV Point Comfort

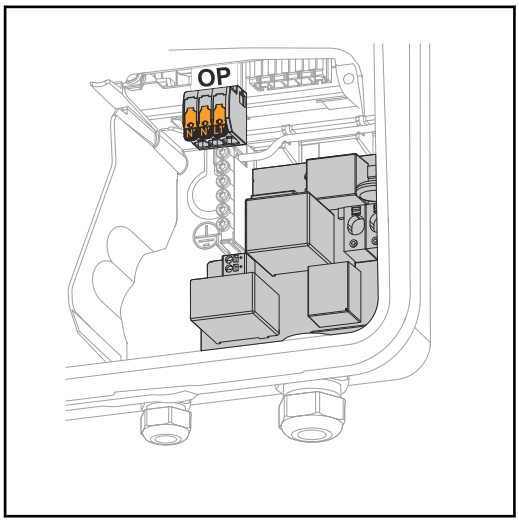

With PV Point Comfort, 1-phase electrical devices are continuously supplied up to a maximum power of 3 kW. Switching between grid-connected and backup power mode takes place automatically. In the event of a failure of the public grid or the inverter, the loads on the PV Point Comfort continue to be supplied. When the public grid is available again and stability is assured, the PV Point Comfort automatically switches to grid-connected operation and backup power mode is terminated.

IMPORTANT!
There must be sufficient power from the PV modules or a battery for backup power mode to run.

For further information and the Installation Instructions, see **PV Point Comfort** on page **161**.

Backup power variant - Full Backup

General

Prerequisites for backup power mode

IMPORTANT!
If several backup power variants are available, please note that only one backup power variant may be installed and configured.

In order to use the inverter's backup power function, the following prerequisites must be fulfilled:
- The inverter must support the backup power variant – Full Backup (see chapter **Function overview** on page **15**).
- A battery suitable for backup power use must be installed and configured.
- Correct cabling of the backup power system in the electrical installation or usage of a switch box from Enwitec (see chapter **Components for automatic Full Backup backup power changeover** on page **177** or **Circuit diagrams** on page **207**).
- Mount and configure the Fronius Smart Meter at the feed-in point.
- Attach a **warning notice for the backup power supply** (https://www.fronius.com/en/search-page, item number: 42,0409,0275) on the electrical distributor.
- Apply the necessary settings in the **"Devices and system components"** → **"Functions and pins"** → **"Backup power"** menu area and activate backup power.
- Follow the **backup power checklist** (https://www.fronius.com/en/search-page, item number: 42,0426,0365) step by step and confirm.

Transitioning from feeding energy into the grid to backup power mode

1. The public grid is monitored by the inverter's internal grid and system protection unit and by the Fronius Smart Meter connected to it.
2. **The public grid fails or specific grid parameters are dropped below or exceeded.**
3. The inverter carries out the measures necessary according to the country standard and then switches off.
4. The inverter starts backup power mode after a checking period.
5. All loads in the household that are in the backup power circuit are supplied by the battery and the PV modules. The remaining loads are not supplied with power and are safely isolated.

Transitioning from backup power mode to feeding energy into the grid

1. The inverter is operating in backup power mode.
2. **The public grid is functioning correctly again.**
3. The Fronius Smart Meter monitors the grid parameters on the public grid and passes this information to the inverter.
4. The stability of the returned public grid is determined by checking the measured values of the Fronius Smart Meter.
5. Backup power mode is terminated automatically or manually depending on the design of the backup power switchover facility.
6. All circuits are reconnected to the public grid and are supplied by the grid.
7. The inverter can start feeding energy into the grid again after performing the grid checks required by the relevant standard.

Backup power and energy saving mode

Under the following conditions, the battery and the inverter are switched to energy saving mode after a waiting time of 8 - 12 minutes and backup power mode is ended:

- The battery is discharged to the minimum state of charge and no energy is coming from the PV modules.
- The inverter is set to energy saving mode (standby mode).

If the battery and inverter are in energy saving mode, the system is reactivated by the following:

- Enough energy is available from the PV modules.
- The public grid is functioning again.
- The battery is switched off and on.

Automatic switch to backup power including backup power circuits and 1-pin separation, e.g. Austria or Australia

Functions

- Measuring and transferring the required parameters for energy management and Solar.web by the Fronius Smart Meter.
- Disconnecting from the public grid to enable operation in backup power mode if the grid parameters are outside the country-specific standards.
- Reconnecting to the public grid when the grid parameters are within the limits specified by the country-specific standards.
- Option of having a separate backup power circuit or several backup power circuits that are supplied even during failure of the public grid. The total load of the backup power circuits must not exceed the nominal output of the inverter. Furthermore, the performance of the connected battery must also be considered.

Transitioning from feeding energy into the grid to backup power mode

1. The public grid is monitored by the inverter's internal grid and system protection unit and by the Fronius Smart Meter connected to it.
2. **Failure of the public grid**.
3. The inverter carries out the measures necessary according to the country standard and then switches off.
   Contactor K1 drops out. This disconnects the backup power circuits and the inverter from the rest of the home network and from the public grid, as the main contacts of contactor K1 open. The inverter activates relay K3, which interrupts the supply to contactor K1. This prevents unintentional activation of contactor K1 and thus a grid connection when voltage is restored in the grid. The NC auxiliary contacts of contactor K1 send feedback to the inverter that the contactor is open (a condition for starting backup power mode).
4. The NO contact of relay K3 gives additional feedback to the inverter on whether the locking was successfully performed by relay K3.
5. The inverter decides based on the contactors' feedback as well as the measurements on the inverter terminals and the Smart Meter that backup power mode can be started.
6. After all the required activation tests have been carried out, the inverter starts backup power mode.
7. All loads in the backup power circuits are supplied with power. The remaining loads are not supplied with power and are safely isolated.

Transitioning from backup power mode to feeding energy into the grid

1. The inverter is operating in backup power mode. Contactor K1 to the public grid is open.
2. **Public grid available again.**
3. The Fronius Smart Meter monitors the grid parameters on the public grid and passes this information to the inverter.
4. The stability of the returned public grid is determined by checking the measured values of the Fronius Smart Meter.
5. The inverter ends backup power mode and disconnects the outputs.
6. The inverter deactivates K3. Contactor K1 is reactivated.
7. All circuits are reconnected to the public grid and are supplied by the grid. The inverter does not feed anything into the grid at this time.
8. The inverter can start feeding energy into the grid again after performing the grid checks required by the relevant standard.

Automatic switch to backup power all-pin separation, e.g. Germany, France, UK, Spain

Functions

- Measuring and transferring the required parameters for energy management and Solar.web by the Fronius Smart Meter.
- Disconnecting from the public grid to enable operation in backup power mode if the grid parameters are outside the country-specific standards.
- Reconnecting to the public grid when the grid parameters are within the limits specified by the country-specific standards.
- Establishing a proper ground connection for backup power mode to ensure the protection devices function correctly.
- Option of having a separate backup power circuit or several backup power circuits that are supplied even during failure of the public grid. The total load of the backup power circuits must not exceed the rated power of the inverter. Furthermore, the performance of the connected battery must also be considered.

Transitioning from feeding energy into the grid to backup power mode

1. The public grid is monitored by the inverter's internal grid and system protection unit and by the Fronius Smart Meter connected to it.
2. **Failure of the public grid**.
3. The inverter carries out the necessary measures according to the country standard and then switches off.
   Contactors K1, K4 and K5 drop out. This disconnects the emergency power circuits and the inverter from the rest of the home network and from the public grid, as the main contacts of contactor K1 open (all-pin). The NC auxiliary contacts of contactor K1 send feedback to the inverter that the contactor is open (a condition for starting backup power mode).
4. The NC main contacts of contactors K4 and K5 are closed, establishing a connection between the neutral conductor and the ground conductor. The two other NC main contacts of contactors K4 and K5 give feedback to the inverter that the ground connection has been established correctly (a condition for starting backup power mode).
5. The inverter activates relay K3, which interrupts the supply to contactors K1, K4 and K5. This prevents unintentional activation of contactors K1, K4 and K5 and thus a grid connection when voltage is restored in the grid.
6. The NO contact of relay K3 gives additional feedback to the inverter on whether the locking was successfully performed by relay K3.
7. The inverter decides based on the contactors' feedback as well as the measurements on the inverter terminals and the Smart Meter that backup power mode can be started.
8. After all the required activation tests have been carried out, the inverter starts backup power mode.
9. All loads in the backup power circuits are supplied with power. The remaining loads are not supplied with power and are safely isolated.

Transitioning from backup power mode to feeding energy into the grid

1. The inverter is operating in backup power mode. Contactor K1 to the public grid is open.
2. **Public grid available again.**
3. The Fronius Smart Meter monitors the grid parameters on the public grid and passes this information to the inverter.
4. The stability of the returned public grid is determined by checking the measured values of the Fronius Smart Meter.
5. The inverter ends backup power mode and disconnects the outputs.
6. The inverter deactivates K3. Power is restored to contactors K1, K4 and K5.
7. All circuits are reconnected to the public grid and are supplied by the grid. The inverter does not feed anything into the grid at this time.
8. The inverter can start feeding energy into the grid again after performing the grid checks required by the relevant standard.

Automatic switch to backup power all-pin separation, Italy

Functions

- Measuring and transferring the required parameters for energy management and Solar.web by the Fronius Smart Meter.
- Monitoring of the voltage and frequency grid parameters by the inverter.
- Disconnecting from the public grid to enable operation in backup power mode if the grid parameters are outside the country-specific standards.
- Reconnecting to the public grid when the grid parameters are within the limits specified by the country-specific standards.
- Establishing a correct ground connection for backup power mode.
- Option of having a separate backup power circuit or several backup power circuits that are supplied even during failure of the public grid. The total load of the backup power circuits must not exceed the nominal output of the inverter. Furthermore, the performance of the connected battery must also be considered.

Transitioning from feeding energy into the grid to backup power mode

1. The public grid is monitored by the inverter's internal grid and system protection unit and by an external grid and system protection unit.
2. **Failure of the public grid**
3. The inverter carries out the measures necessary according to the country standard and then switches off.
4. The external grid and system protection unit opens contactors K1 and K2 for grid monitoring. This disconnects the backup power circuits and the inverter from the rest of the home network and from the public grid, as the main contacts of the contactors K1 and K2 all-pin open. To ensure that the public grid has definitely been disconnected, the NC auxiliary contacts of contactor K1 give feedback to the external grid and system protection unit.
5. The NC main contacts of contactors K4 and K5 are closed, establishing a connection between the neutral conductor and the ground conductor. The two other NC main contacts of contactors K4 and K5 give feedback to the inverter that the ground connection has been established correctly.
6. The inverter activates relay K3, which activates the remote input of the external grid and system protection unit via an NC contact. This prevents a connection to the public grid when voltage is restored in the grid.
7. The NO contact of relay K3 gives additional feedback to the inverter on whether the locking was successfully performed by relay K3.
8. The inverter decides based on the contactor's feedback as well as the measurement on the inverter terminals and the Smart Meter that the emergency power mode can be activated.
9. The inverter starts backup power mode after a defined checking period.
10. All loads in the backup power circuits are supplied with power. The remaining loads are not supplied with power and are safely isolated.

Transitioning from backup power mode to feeding energy into the grid

1. The inverter is operating in backup power mode. The contactors K1 and K2 to the public grid are open.
2. **Public grid available again.**
3. The Fronius Smart Meter monitors the grid parameters on the public grid and passes this information to the inverter.
4. The stability of the returned public grid is determined by checking the measured values of the Fronius Smart Meter.
5. On the basis of adjustments that have been carried out, the inverter ends backup power mode and disconnects the outputs.
6. The inverter deactivates K3. Power is restored to contactors K1, K2, K4 and K5.
7. All circuits are reconnected to the public grid and are supplied by the grid. The inverter does not feed anything into the grid at this time.
8. The inverter can start feeding energy into the grid again after performing the grid checks required by the relevant standard.

Manual switch to backup power 1-pin separation, e.g. Australia / 2-pin separation, e.g. Germany

Functions

- Measuring and transferring the required parameters for energy management and Solar.web by the Fronius Smart Meter.
- Monitoring of the grid parameters by the inverter.
- Possibility of manual separation from the public grid if it fails or is deemed unstable.
- Option of having a separate backup power circuit or several backup power circuits that are supplied even during failure of the public grid. The total load of the backup power circuits must not exceed the rated power of the inverter. Furthermore, the performance of the connected battery must also be considered.
- If, in the event of a public grid failure, there is no manual switch to backup power mode within the first 10 minutes, this may cause the inverter and the battery to shut down. In order to then start backup power mode, manual switching must take place and a manual system start must be performed, if necessary (see chapter **Manual system start** on page **29**).
- It is possible to manually reconnect the inverter and loads in the backup power circuit to the public grid once it is deemed to be stable again. The inverter only starts feed-in mode once the required grid monitoring time has passed.

Transitioning from feeding energy into the grid to backup power mode

1. The public grid is monitored by the inverter's internal grid and system protection unit and by the Fronius Smart Meter connected to it.
2. **Failure of the public grid**.
3. The inverter carries out the measures necessary according to the country standard and then switches off.
4. The user switches the changeover switch Q1 from switch position 1 (grid operation) via switch position 0 to switch position 2 (backup power mode). This disconnects the backup power circuits and the inverter from the rest of the home network and from the public grid. With all-pin separation, the ground conductor and neutral conductor are additionally connected via the main contacts of the switch. Switch position 2 (backup power mode) is reported back to the inverter via a main contact of changeover switch Q1. In addition, an interruption of the WSD line occurs when the changeover switch Q1 is switched via switch position 0. This causes the inverter to shut down immediately. This behaviour is ensured via 2 contacts. Communication between the inverter and Fronius Smart Meter is optionally interrupted via a contact. The suspended communication prevents automatic termination of backup power mode when the public grid returns, so that the inverter remains in backup power mode until it is manually switched back.
5. The inverter decides based on feedback for switch position 2 as well as the measurements on the inverter terminals and the Fronius Smart Meter that backup power mode can be started.
6. After all the required activation tests have been carried out, the inverter starts backup power mode.
7. All loads in the backup power circuits are supplied with power. The remaining loads are not supplied with power and are safely isolated.

Transitioning from backup power mode to feeding energy into the grid

1. The inverter is operating in backup power mode. Changeover switch Q1 is in switch position 2 (backup power mode).
2. **Public grid available again.**
3. The user switches the changeover switch Q1 from switch position 2 (backup power mode) via switch position 0 to switch position 1 (grid operation). When switching via switch position 0, the inverter is switched off immediately. This is ensured via the contacts of the changeover switch Q1. To protect sensitive loads, it is advisable to remain in the zero position for at least 1 second during the changeover process from backup power mode to the public grid.
4. The inverter is again connected to the entire home network and to the public grid.
5. Communication between the inverter and Fronius Smart Meter is re-established.
6. The inverter can start feeding energy into the grid again after performing the grid checks required by the relevant standard.

Installation

General

Quick-lock system

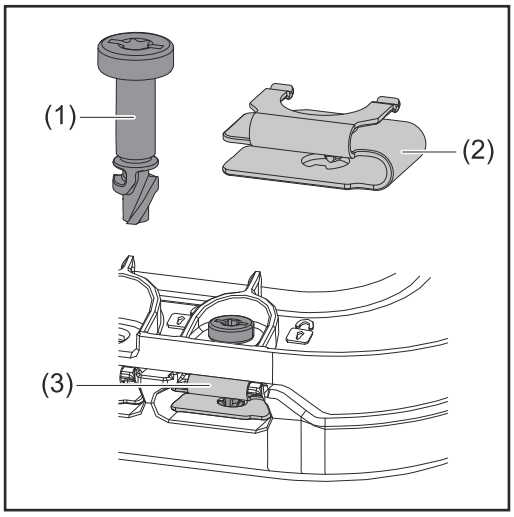

A quick-lock system (3) is used to mount the connection area cover and front cover. The system is opened and closed with a half-rotation (180°) of the captive screw (1) into the quick-lock spring (2).

The system is independent of torque.

NOTE!

Danger when using a drill driver.
This may result in the destruction of the quick-lock system due to overtorque.

- ▶ Use a screwdriver (TX20).
- ▶ Do not turn the screws more than 180°.

Warning notices on the device

Technical data, warning notices and safety symbols are affixed to the inverter. These warning notices and safety symbols must not be removed or painted over. They warn against incorrect operation which can lead to serious injury and damage.

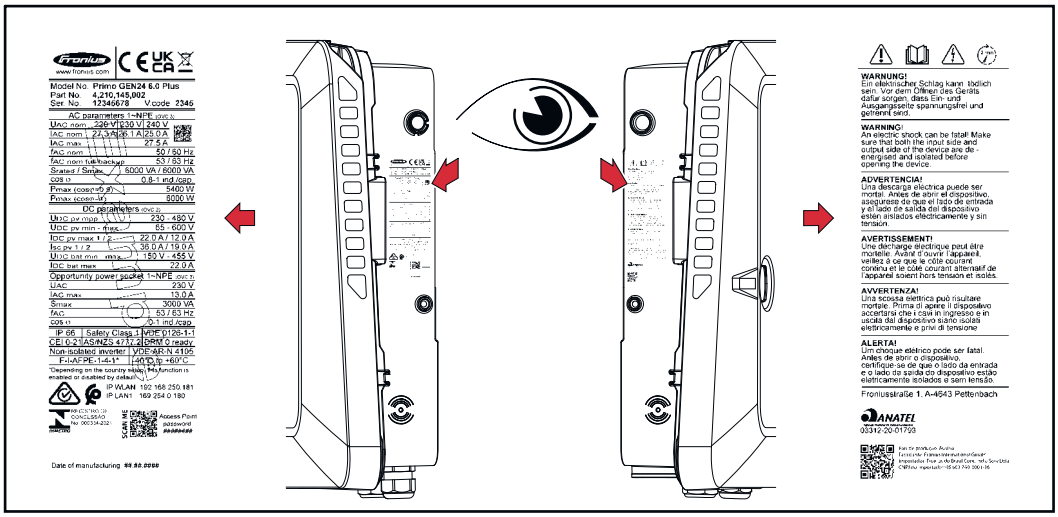

A 4-digit number (coded production date) is printed on the rating plate at the very bottom, from which the production date can be calculated.
If you subtract the value 11 from the first two digits, you get the production year.
The last two digits stand for the calendar week in which the device was produced.

Example:
Value on rating plate = **3205**
32 - 11 = 21 → Production year 2021
05 = Calendar week 05

Symbols on the rating plate:

CE mark – confirms compliance with applicable EU directives and regulations.

UKCA mark – confirms compliance with applicable UK directives and regulations.

WEEE mark – waste electrical and electronic equipment must be collected separately and recycled in an environmentally sound manner in accordance with the European Directive and national law.

RCM mark – tested in accordance with the requirements of Australia and New Zealand.

ICASA mark – tested in accordance with the requirements of the Independent Communications Authority of South Africa.

CMIM mark – tested in accordance with IMANOR requirements for import regulations and compliance with Moroccan standards.

Safety symbols:

Risk of serious injury and property damage due to incorrect operation.

Do not use the functions described here until you have fully read and understood the following documents:
- These Operating Instructions.
- All the Operating Instructions for the photovoltaic system components, especially the safety rules.

Dangerous electrical voltage.

Allow the capacitors of the inverter to discharge (2 minutes).

Warning notice text:

WARNING!
An electric shock can be fatal. Before opening the device, it must be disconnected and de-energized at the input and output.

System component compatibility

All installed components in the photovoltaic system must be compatible and have the necessary configuration options. The installed components must not restrict or negatively influence the functioning of the photovoltaic system.

NOTE!

Risk due to components in the photovoltaic system that are not compatible and/or have limited compatibility.
Incompatible components may limit and/or negatively affect the operation and/or functioning of the photovoltaic system.

- ▶ Only install components recommended by the manufacturer in the photovoltaic system.
- ▶ Before installation, check the compatibility of components not expressly recommended with the manufacturer.

Installation location and position

Choosing the location of the inverter

Please note the following criteria when choosing a location for the inverter:

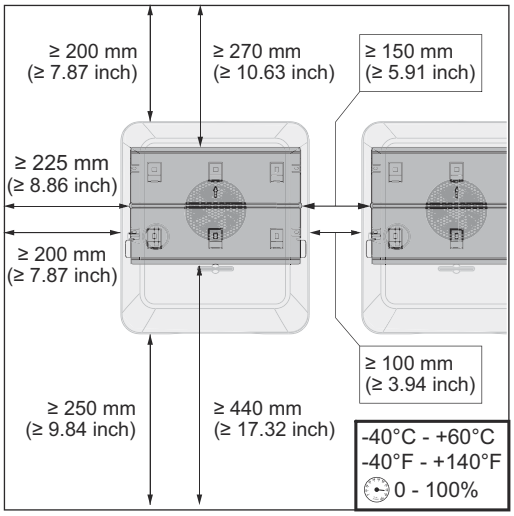

Only install on a solid, non-flammable surface.

Max. ambient temperatures:
-40 °C - +60 °C
-40 °F - +140 °F

Relative humidity:
0-100%

If the inverter is installed in a switch cabinet or similar enclosed space, ensure sufficient heat dissipation with forced-air ventilation.

For detailed information on the dimensions of the inverter, see chapter **Fronius Primo GEN24 3 - 6 kW** on page **231**.

When installing the inverter on the outer walls of cattle sheds, it is important to maintain a minimum clearance of 2 m between the inverter and the ventilation and building openings on all sides.

The following substrates are permissible for installation:
- Walls (corrugated metal walls [mounting rails], brick walls, concrete walls, or other non-flammable surfaces sufficiently capable of bearing loads)
- Mast or support (installed using mounting rails, behind the PV modules directly on the PV mounting system)
- Flat roofs (if installing on a foil roof, make sure that the foils adhere to the fire protection requirements and are thus not easily flammable. Ensure compliance with the national provisions.)
- Covered car park roofs (no overhead installation)

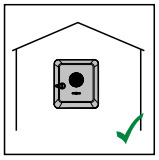

The inverter is suitable for indoor installation.

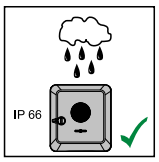

The inverter is suitable for outdoor installation.

Due to its protection class IP 66, the inverter is insensitive to water jets from all directions and can also be used in humid environments.

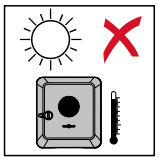

In order to minimise the heating up of the inverter, do not expose it to direct insolation.

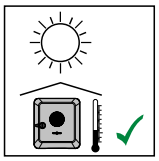

The inverter should be installed in a protected location, for example, below the PV modules or under an overhanging roof.

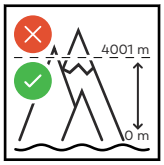

The inverter must not be installed or used at altitudes above 4 000 m.

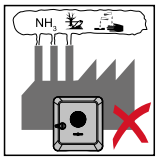

Do not install the inverter in:
- Areas where it may be exposed to ammonia, corrosive gases, acids or salts (e.g. fertiliser storage areas, vent openings for livestock stables, chemical plants, tanneries, etc.)

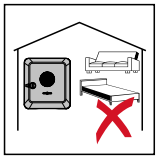

During certain operating phases the inverter may produce a slight noise. For this reason it should not be installed in an occupied living area.

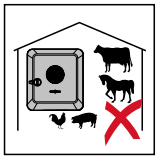

Do not install the inverter in:
- Areas where there is an increased risk of accidents from farm animals (horses, cattle, sheep, pigs, etc.)
- Stables or adjoining areas
- Storage areas for hay, straw, chaff, animal feed, fertilizers, etc.

The inverter is designed to be dustproof (IP 66). In areas of high dust accumulation, dust deposits may collect on the cooling surfaces, and thus impair the thermal performance. Regular cleaning is required in this case, see chapter **Operation in dusty environments** on page **173**. We therefore recommend not installing the device in areas and environments with high dust accumulation.

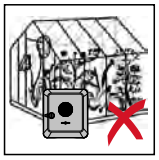

Do not install the inverter in:
- Greenhouses
- Storage or processing areas for fruit, vegetables or viticulture products
- Areas used in the preparation of grain, green fodder or animal feeds

Choosing the location of third-party batteries

IMPORTANT!
Refer to the manufacturer's documents for the suitable location for third-party batteries.

Installation position of inverter

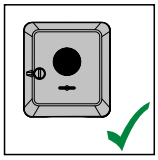

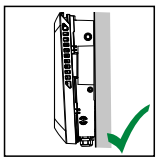

The inverter is suitable for vertical installation on a vertical wall or column.

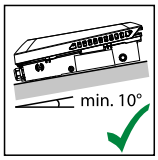

The inverter is suitable for installation on a sloping surface (min. slope to underside 10°).

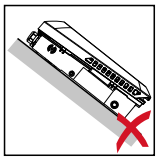

Do not install the inverter on a sloping surface with its connection sockets at the top.

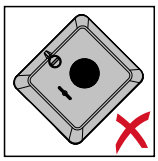

Do not install the inverter at an angle on a vertical wall or column.

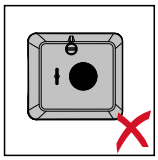

Do not install the inverter horizontally on a vertical wall or pillar.

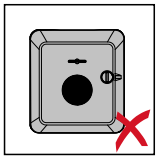

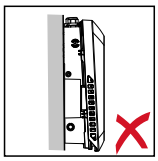

Do not install the inverter on a vertical wall or pillar with its connection sockets facing upwards.

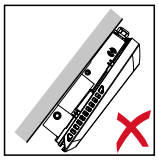

Do not install the inverter overhanging with the connection sockets at the top.

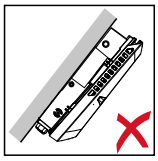

Do not install the inverter overhanging with the connection sockets at the bottom.

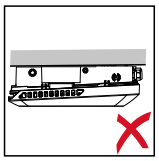

Do not install the inverter on the ceiling.