Annex acc. to FCC Title 47 CFR Part 15
relating to
TeraTron GmbH
Hybrid Desktopreader

Annex no. 5
User Manual
Functional Description

Title 47 - Telecommunication
Part 15 - Radio Frequency Devices
Subpart C – Intentional Radiators
ANSI C63.4-2014
ANSI C63.10-2013

ilac-MRA DAkkS Deutsche Akkreditierungsstelle D-PL-12053-01-00

m. dudde hochfrequenz-technik Rottland 5a D-51429 Bergisch Gladbach/ Germany Tel: +49 2207-96890 Fax +49 2207-968920

Document no.	Hybrid Desktopreader User Manual	
Project	Hybrid Desktopreader	
Document for	FCC and IC	Creation date: 06.01.2017

Functional Description of the Hybrid Desktopreader Module

The Hybrid Desktopreader Module offers a general RFID reader functionality for 125kHz (LF) and 13,56MHz (HF) RFID Transponders. The Hybrid Desktopreader Module is powered by a 5V DC voltage source that is provided by an external interface module that is used in combination with it. The Hybrid Desktopreader RFID functionality includes reading of several types of 125kHz (e.g. HITAG) or 13,56MHz ISO transponder (e.g. ISO15693, ISO14443) types.

The µProcessor of the Hybrid Desktopreader is clocked by a 8MHz-Resonator. All active components are powered by an external 5V 250mA power supply. The 125kHz-Reader IC (P4097) drives the 125kHz coil antenna. The 13,56MHz Reader IC (CLRC663) drives a 13,56MHz coil antenna respectively.

When reading an RFID transponder ID, the data is sent via UART to another interface module that is able to identify the transponder RFID data and manage the transponder ID. This data can be used for further processing, e.g. authorisation of functionalities.

Document no.	Hybrid Desktopreader User Manual	
Project	Hybrid Desktopreader	
Document for	FCC and IC	Creation date: 06.01.2017

Functional Block Diagram

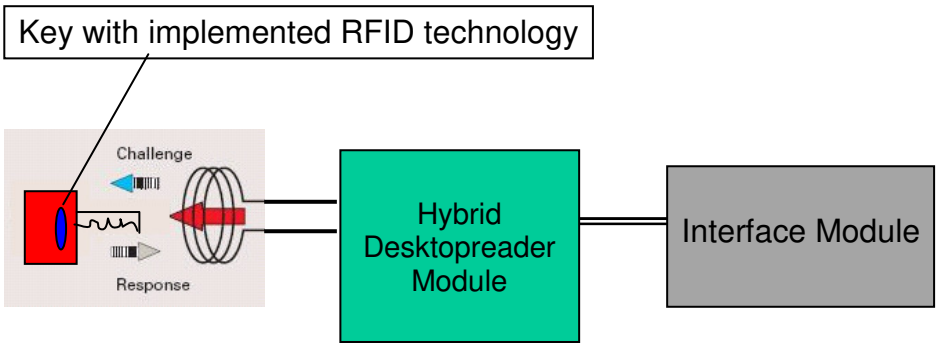

The Hybrid Desktopreader offers 125kHz and 13,56MHz RFID functionality using two different antennas for each RFID frequency.

Document no.	Hybrid Desktopreader User Manual	
Project	Hybrid Desktopreader	
Document for	FCC and IC	Creation date: 06.01.2017

Compliance Statements

Compliance Statements FCC

The title **"CAUTION TO USERS"** or **"FCC/IC WARNING NOTE"** or relevant title and "**Changes or modifications not expressly approved by the party responsible for compliance could void the user's authority to operate the equipment."**

This device complies with Part 15 of the FCC Rules. Operation is subject to the following two conditions:
(1) this device may not cause harmful interference, and
(2) this device must accept any interference received, including interference that may cause undesired operation.

Compliance Statements IC

This device complies with Industry Canada licence-exempt RSS standard(s). Operation is subject to the following two conditions: (1) this device may not cause interference, and (2) this device must accept any interference, including interference that may cause undesired operation of the device.

Le présent appareil est conforme aux CNR d'Industrie Canada applicables aux appareils radio exempts de licence. L'exploitation est autorisée aux deux conditions suivantes : (1) l'appareil ne doit pas produire de brouillage, et (2) l'utilisateur de l'appareil doit accepter tout brouillage radioélectrique subi, même si le brouillage est susceptible d'en compromettre le fonctionnement.