BlueJay™ Universal Data Transceiver M-2911

- **Provides direct sequence spread spectrum peer-to-peer, point-to-point, point-to-multipoint and master/slave high speed (1 Mbps) data transmission rates at ranges up to 1500 feet**
- **Interfaces using either a RS-232, RS-422 or RS-485 connection at interface baud rates between 2400 and 115.2 Kbps**
- **Substation hardened to withstand temperatures from -40 to +80 degrees C and humidity up to 95%**
- **No user license required, interfaces with almost any legacy IED**

WARNING

This equipment has been tested and found to comply with the limits for a Class A digital device, pursuant to Part 15 of the FCC Rules. These limits are designed to provide reasonable protection against harmful interference when the equipment is operated in a commercial environment. This equipment generates, uses, and can radiate radio frequency energy, and, if not installed and used in accordance with the instruction manual, may cause harmful interference to radio communications. Operation of this equipment in a residential area is likely to cause harmful interference in which case the user will be required to correct the interference at his own expense.

Only the antenna provided is authorized for use with the M-2911. If the antenna is lost or damaged, please contact Beckwith Electric Co., Inc. to secure a replacement antenna.

This product generates, uses, and can radiate radio frequency (RF). If it is not installed and used in accordance with the operating instructions, it can cause harmful interference to communications. If this equipment causes harmful interference to radio or television reception, the user should try and correct the interference by:

- Reorienting or relocating the receiving/transmitting antenna
- Increasing the separation between the equipment and the M-2911
- Connecting the equipment into an outlet on a different circuit from the M-2911.

If these do not correct the interference, consult an experienced radio/television technician for assistance. Correcting such interference is the responsibility of the user, not the manufacturer.

Changes or modifications not expressly approved by Beckwith Electric Co., Inc. may void the user's authority to operate the equipment.

FCC Radiation Exposure Statement

This equipment complies with FCC radiation exposure limits set forth for uncontrolled equipment. This equipment should be installed and operated with a minimum distance of at least 20 cm between the radiator and person's body (excluding extremities) and must not be co-located or operated with any other antenna or transmitter.

The M-2911 Blue Jay™ Universal Data Transceiver is a self-contained short-range wireless communication device (SRD) that is used for transferring serial communication data between Intelligent Electrical Device's (IED's) and computers hosting control software in an industrial environment. The M-2911 is based on an Intersil direct sequence spread spectrum chip set that operates in the 2.4 GHz ISM band. The M-2911 design meets the category for low power devices (LPDs) standard requirement for license-free operation.

Interface

The M-2911 is equipped with two serial data connectors, one is a DE-9 connector for use with an RS-232 serial data port and the other is a 6-pin bare wire Phoenix–type connector for use with an RS-422/RS-485 (twisted shielded pair) serial data ports. Only one port can be used at a time. Each port is capable of serial data speeds of up to 115 kbps.

Data Transmission:

- Error Detection – 16 bit CRC (10^{-5} BER at –70dBm)
- Maximum throughput – 1 Mbps RF, 2400 to 115.2 Kbps interface baud rate

Communication

The M-2911 conditions the data and transmits it over a half-duplex direct sequence spread spectrum radio operating in the 2.4 GHz ISM band. The over-the-air data rate is 1 Mbps.

Transmit:

- Frequency Range – 2400 MHz to 2483.5 MHz
- Output Power – 30 mW
- Modulation – DBPSK
- Occupied Bandwidth – 20 MHz
- Spurious Emissions – 50 mV/meter
- Harmonic Emissions – 500 uV/meter
- Spreading Method – Direct Sequence 11 bit code
- Center Band – Carrier 2.450 GHz

Receive:

- Sensitivity – -93 dBm
- Selectivity – 25 MHz

■ **NOTE**: For maximum range, all antennae must be oriented in the same plane.

Power

The M-2911 includes a self-contained switching power supply that supplies the data and RF circuitry with regulated dc power as required. The power supply has an external 3.5 mm outside diameter, 2.1 mm inside pin, center positive power input jack designed to accept the output of a UL listed wall transformer power supply included with each unit that delivers between 7 and 60 V dc at a maximum power output of 2.5 Watts.

Power Requirements:

- Operating Voltage – +7 to +60 V dc
- Transmit Current – 2 W (300 mA @ 7 V)
- Receive Current – 2 W (300 mA @ 7 V)
- Inlet Current – 1 W (150 mA @ 7 V)
- Sleep Current – 0.2 W (30 mA @ 7 V)

Configuration

The M-2911 is configurable with the following parameters:

- Unit (Transmit/Receive) Address: 1 to 250
- Destination (Transmit): 1 to 255
- Multicast (Receive) Address: 251 to 254
- Baud Rate: Selectable from 2400 to 115,200
- Parity: Even/Odd/No Parity
- Transmit Retry: 0 to 9 times
- Interface: RS-232/RS-422/RS-485
- RS-232 RTS/CTS: FIXED/AUTO/FLOW-THRU
- RS-422/485 Tx:
  Gating: 0 to 10 characters
  Lead Time: 0 to 10 mS
  Hold Time: 0 to 10 mS
- Intercharacter Timeout: 1 to 10 character times/1 to 100 mS
- Maximum Packet Size: 1 to 60 characters

Configuring the M-2911

To configure the M-2911, the unit must be put in the AT-Command Mode. To put the unit in AT-Command Mode:

1. Connect the unit (using an RS-232 cable) to a PC or laptop computer running a terminal emulator program (such as Microsoft HyperTerminal) set to 9600 bps, No Parity, One Stop Bit.
2. Apply power to the unit.
3. After 1–2 seconds, type "+++", and pause for 1 second or more. The M-2911 will enter AT-Command Mode and respond with "OK". The user can then enter any of the AT Commands listed below.

■ **NOTE**: After each command, the unit will return "OK" if the command was valid, or "???" if invalid or out-of-range.

AT Commands

Unit (Transmit/Receive) Address Configuration: **ATS=nnn<ENTER>**, where nnn is 1 to 250

Destination (Transmit) Address Configuration: **ATD=nnn<ENTER>**, where nnn is 1 to 255

Multicast (Receive) Address Configuration: **ATM=nnn<ENTER>**, where nnn is 251 to 254

Baud Rate Select: **ATB=nnnnnn<ENTER>**, where nnnnnn is 2400, 4800, 9600, 19200, 38400, 76800, or 115200

Parity Select: **ATP=x**, where x is E for Even Parity, O for Odd Parity, or N for No Parity

Transmit Retries Configuration: **ATR=n<ENTER>**, where nn is 0 to 9

Interface Selection: RS-232, RS-422, or RS-485

ATI=RS232<ENTER>

ATI=RS422<ENTER>

ATI=RS485<ENTER>

RS-232 RST Configuration:

ATI=RTSx<ENTER>, where x is 0 for Low, 1 for High, F for Flow-Thru

ATI=CTSx<ENTER>, where x is 0 for Ignore, 1 for Obey, F for Flow-Thru

RS-422 Tx Gating Configuration:
ATI=TXO<ENTER>, to set Transmit On.
ATI=TXLnC<ENTER>, to set Transmit On Lead Time to n characters
ATI=TXHnC<ENTER>, to set Transmit On Hold Time to n characters
ATI=TXLnnn<ENTER>, to set Transmit On Lead Time to nnn mS
ATI=TXHnnn<ENTER>, to set Transmit On Hold Time to nnn mS

Intercharacter Timeout Configuration:
ATT=nnC<ENTER>, where nn is1–10
ATT=nnn<ENTER>, where nnn is 1–1,000 for 1 mS to 1000 mS

Maximum Packet Size Configuration: **ATN=nn<ENTER>**, where nn is 1–52

View Settings: **ATV<ENTER>**; the command returns the following (example) parameters:
Beckwith Electric M-2911 BlueJay Transceiver
Software Version 01.00
Serial Number: 001.032
Unit Address: 001, Destination Address: 002, Multicast Address: 251
Baud Rate: 9600 bps, No Parity
Transmit Retry: 5
RS-232, RTS Flow-Thru, DTR Flow-Thru, DSR Flow-Thru
Intercharacter Timeout: 5 Char, Maximum Packet Size: 32 Char

Exit AT-Command Mode: **ATZ**

Application Information

Circuit		Signal	DB-9S RS-232
BB	RX	Receive Data	Pin 2
BA	TX	Transmit Data	Pin 3
CA	RTS	Request to Send	Pin 7
CB	CTS	Clear to Send	
CD	DTR	Data Terminal Ready	Pin 4
CF	DCD	Data Carrier Detect	
AB	GND	Signal Ground	Pin 5

Table 1 RS-232 Communication Port Signals

RS-232 Communication

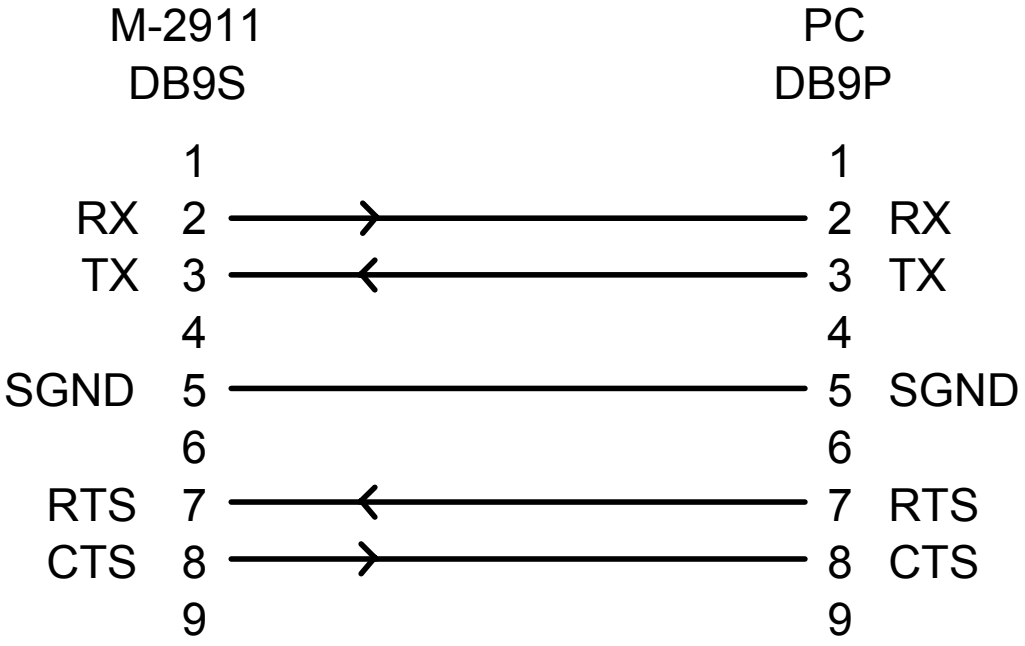

Figure 1 RS-232 Pin-out

RS-232 is point-to-point (four wires plus shield) from M-2911 to one IED.

RS-422 Communication

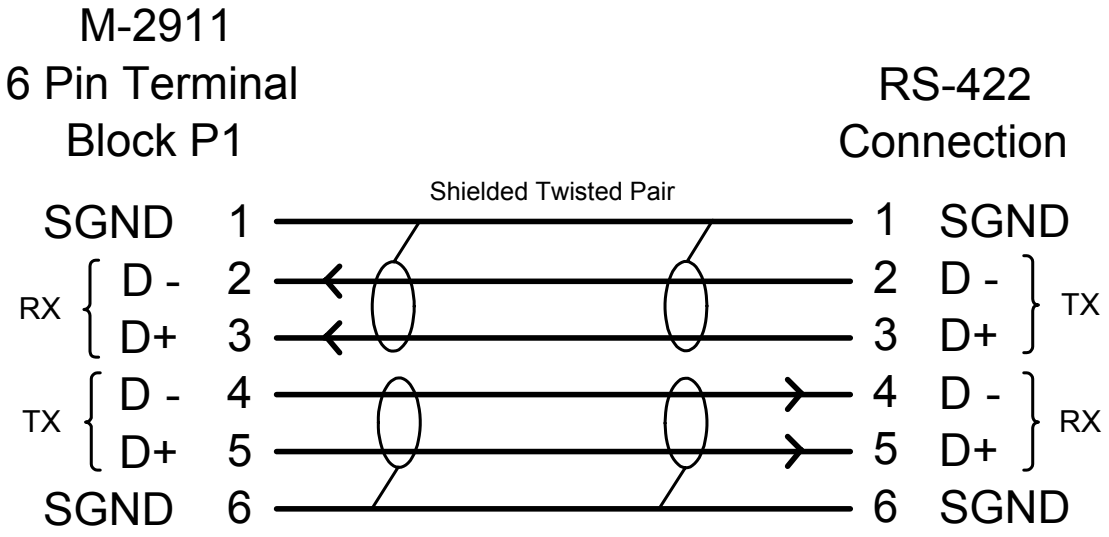

Figure 2 RS-422 Pin-out

RS-422 is a dual shielded, twisted pair (four wires plus two shields), from M-2911 to one IED.

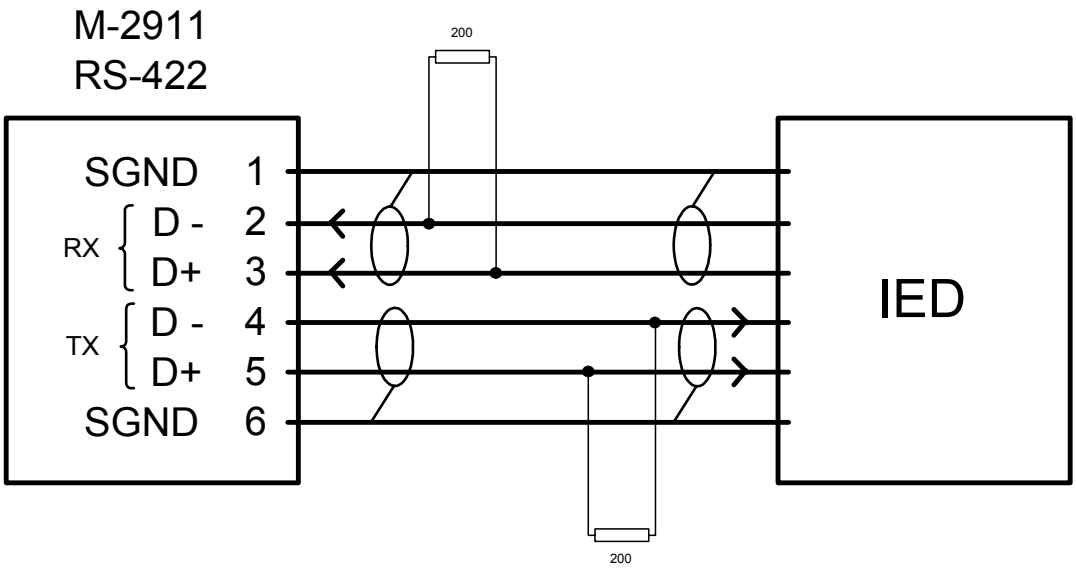

Figure 3 RS-422 Example IED

RS-422 network is a dual shielded twisted pair (four wires plus two shields), from M-2911 to IEDs in parallel.

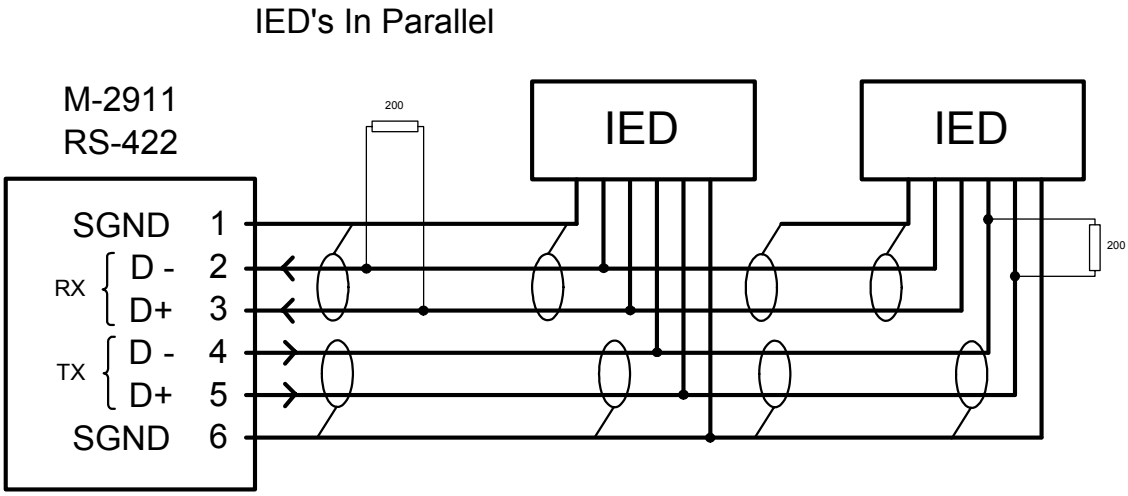

Figure 4 RS-422 Network Example IED's in Parallel

RS-485 Communication

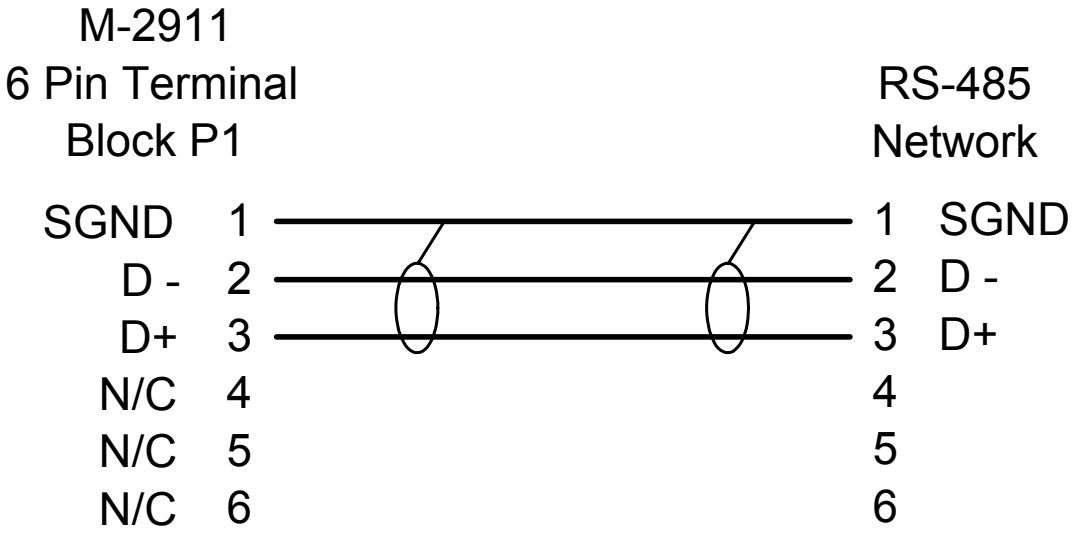

Figure 5 RS-485 Pin-out

RS-485 is a single shielded twisted pair (two wires plus shield), from M-2911 to IEDs in parallel.

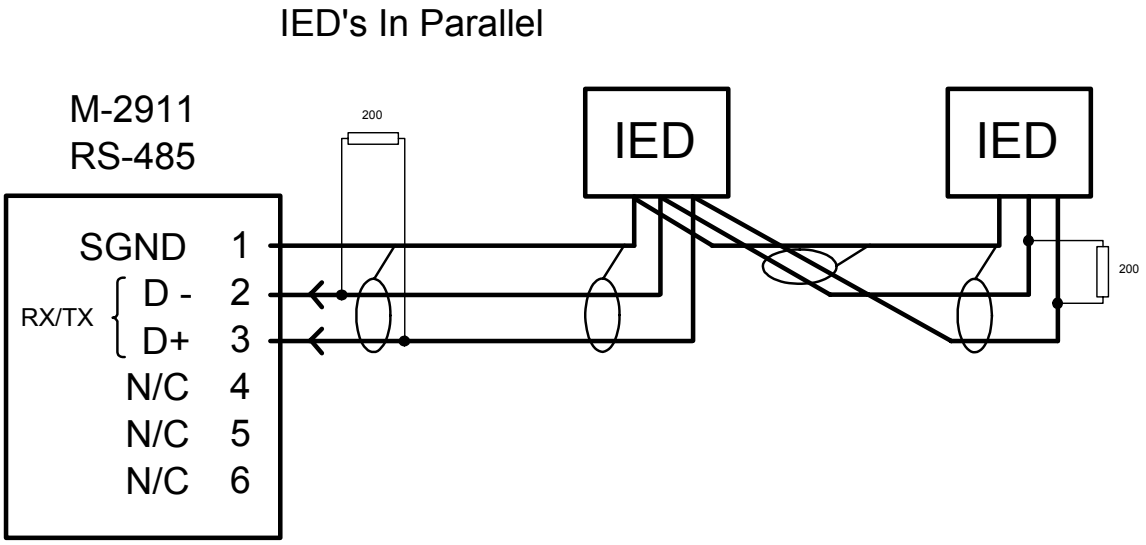

Figure 6 RS-485 Example IED's in Parallel

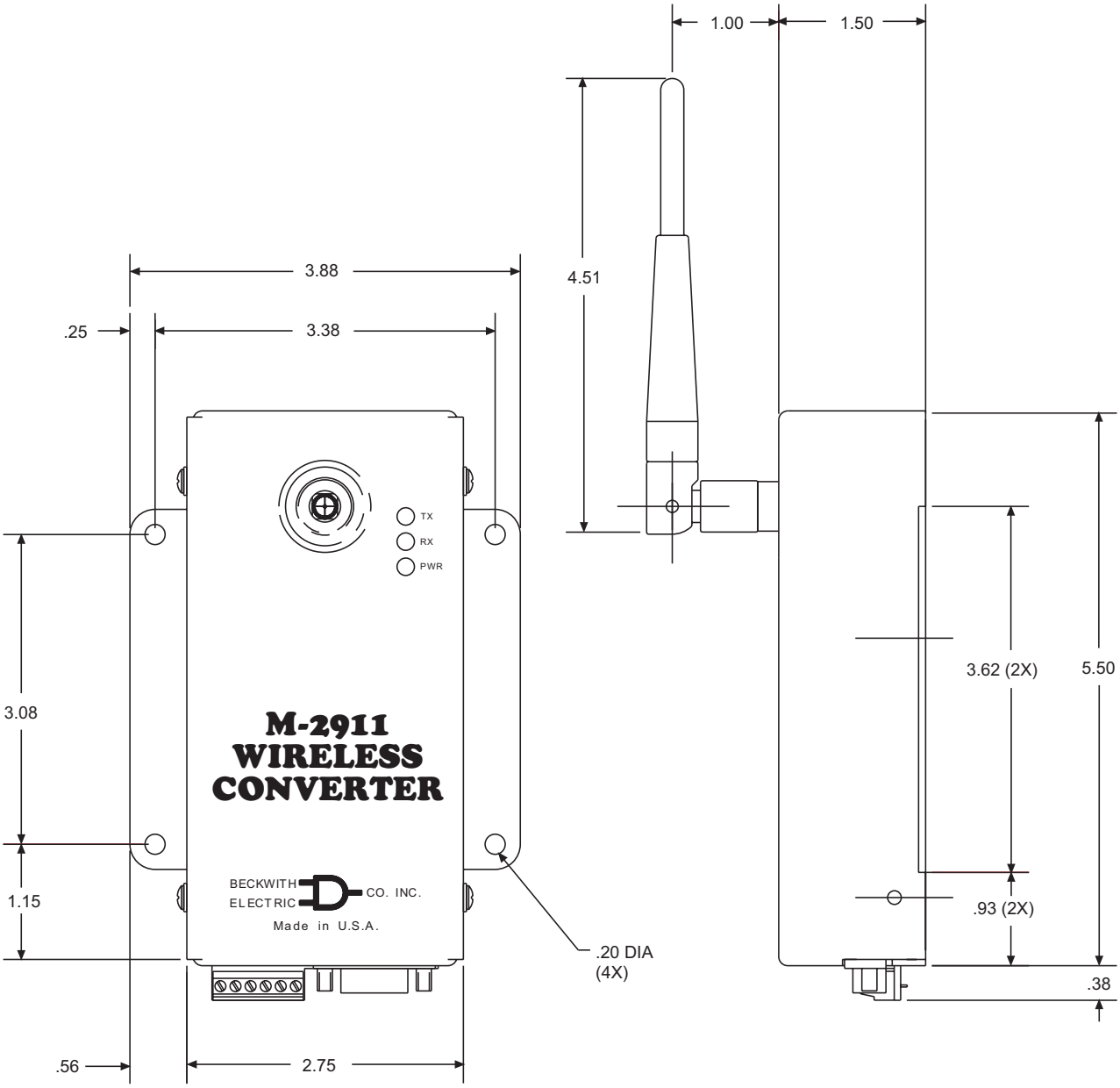

Figure 7 Outline Dimensions

Environmental

Temperature: Proper operation maintained from –40°C to +80°C.

Storage Temperature: –50°C to +100°C.

Humidity: Proper operation is maintained up to 95% relative humidity (non-condensing).

Environmental Protection: The power supply printed circuit board is conformally coated to inhibit fungus growth.

Enclosure: 1/16" Aluminum.

Physical

Size: 5.88" high (with antenna 9.43") x 3.88" wide x 2.5" deep (14.58 cm (23.1) x 9.9 cm x 6.13 cm). See Figure 7 for dimensional drawing.

Weight: 2.13 oz (60 grams)

Enclosure meets requirements of IP30.

Safety and Cautions

WARNING: **The installation, maintenance, and/or operation of this equipment could present potentially unsafe conditions, including, but not limited to, electrical shock or improper voltage to components. Improper operation could cause personal injury, death, or damage to property.**

Read all safety instructions before operating the M-2911, and retain them for further reference. Follow all operating and usage instructions, and make special note of the following safety symbols:

– This sign warns that the area is connected to a dangerous high voltage, and you must never touch it.

– This sign means that you should refer to the corresponding section of the operation manual for important information before proceeding.

Do not attempt to perform maintenance or service functions that are not described in the operating instructions. Instead, refer all such service requirements to Beckwith Electric Co., Inc. Unit must be returned for service in secure (preferably original) packaging. Shipping cost must be paid by user.

Only the antenna provided is authorized for use with the M-2911. If the antenna is lost or damaged, please contact Beckwith Electric Co., Inc. to secure a replacement antenna.

This product generates, uses, and can radiate radio frequency (RF). If it is not installed and used in accordance with the operating instructions, it can cause harmful interference to communications. If this equipment causes harmful interference to radio or television reception, the user should try and correct the interference by:

- Reorienting or relocating the receiving/transmitting antenna
- Increasing the separation between the equipment and the M-2911
- Connecting the equipment into an outlet on a different circuit from the M-2911.

If these do not correct the interference, consult an experienced radio/television technician for assistance. Correcting such interference is the responsibility of the user, not the manufacturer.

Compliance

This device has been designed to operate with an antenna having a maximum gain of 2 dB. Antenna having a higher gain are strictly prohibited per regulations of Industry Canada. The required antenna impedance is 50 ohms.

This equipment has been tested and found to comply with the limites for a Class A digital device, pursuant to Part 15.247 and 15.109 of the FCC Rules and Industry Canada RSS-210 and ICES-003. These limits are designed to provide reasonable protection against harmful interference when the equipment is operated in a commercial environment. This equipment generates, uses, and can radiate radio frequency energy, and, if not installed and used in accordance with the instruction manual, may cause harmful interference to radio communications. Operation of this equipment in a residential area is likely to cause harmful interference in which case the user will be required to correct the interference at his own expense.

Patent & Warranty

■ **NOTE**: Changes or modifications to the unit not expressly approved by Beckwith Electric Co. may void the user's authority to operate the equipment.

U.S. Patent for the M-2911 BlueJay™ Universal Data Transceiver is pending.

The M-2911 BlueJay™ Universal Data Transceiver is covered by a five year warranty from the date of shipment.

Specification is subject to change without notice.

ISO 9001:1994
Registered

BECKWITH ELECTRIC CO., INC.
6190 - 118th Avenue North • Largo, Florida 33773-3724 U.S.A.
PHONE (727) 544-2326 • FAX (727) 546-0121
E-MAIL marketing@beckwithelectric.com
WEB PAGE www.beckwithelectric.com

© 2002 Beckwith Electric
Printed in U.S.A.

800-2911-SP-00MC1 11/02