AVSHARE ®

2.4GHz WIRELESS AUDIO/VIDEO SENDER

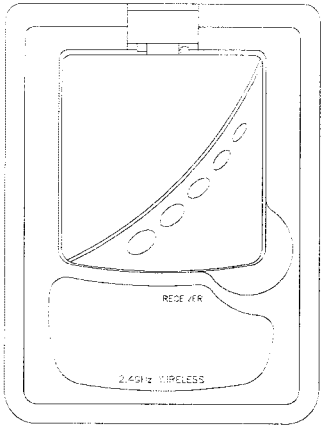

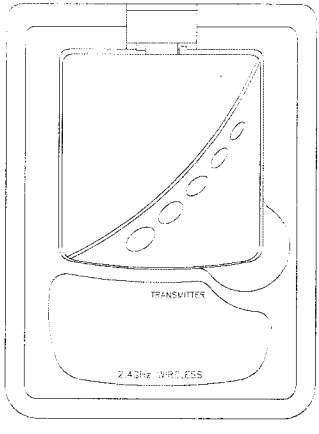

☐ M111 with remote control extender
(TRANSMITTER:M201, RECEIVER:M301)

☐ M411 without remote control extender
(TRANSMITTER:M200, RECEIVER:M300)

FCC INDUSTRY CANADA INDUSTRIE CANADA

• PLEASE READ BEFORE USE •

OWNER'S MANUAL

DOC NO: 2507M10AV002A Rev: 1A
DATE: 19 -JUN-2002

Important-Safety Precautions

- To prevent fire or shock hazard, do not expose this product to rain or moisture. Do not use near a bath tub, wash bowl, kitchen sink, or laundry tub, in a wet basement, or near a swimming pool.
- To avoid electrical shock, do not open this product.
- This product should be operated using only the power supply included with it or provided as an accessory.
- Do not overload wall outlets and extension cords as this can result in the risk of fire or electric shock.
- Refer servicing to qualified personnel only.

Caution: Changes or modificatons not expressly approved by the party responsible for compliance could void the user's authority to operate the equipment.

Note:

This equipment has been tested and found to comply with the limits for CTC, FCC and CE EMC directive. These limits are designed to provide reasonable protection against harmful interference in a residential installation. This equipment generates, uses and can radiate radio frequency energy and, if not installed and used in accordance with the instruction, may cause harmful interference to radio communications. However, there is no guarantee that interference will not occur in a particular installation. If this equipment does cause harmful interference to radio or television reception, which can be determined by turning the equipment off and on, the user is encourage to try to correct the interference by one or more of the following measures:

- Reorient or relocate the receiving antenna.
- Increase the separation between the equipment and receiver.
- Connect the equipment into an outlet on a circuit different from that to which the receiver is connected.
- Consult the dealer or an experienced radio/TV technician for help.

Table of Contents

A. Introduction to 2.4 GHz Wireless Video Sender.....3

B. Description of Box Contents.....4

C. Panel Controls and Features.....5

D. Setting up System.....9

Connecting the System Transmitter to:

- VCR.....10
- Satellite Receiver or Laser Disc Player.....11

Connecting the System Receiver to:

- Television (or Video Monitor).....12
- VCR.....13

E. Orienting System for Optimal Performance.....14

F. Using The Remote Control Feature.....16

G. Troubleshooting & Care and Maintenance.....17

H. Specifications.....18

A. Introduction to 2.4 GHz Wireless Video Sender

The system is a wireless audio/video sender that uses advanced wireless communication technology to deliver consistently sharp audio and video up to 100 meters away. By transmitting at a very high frequency (2.4 GHz or 2.4 billion cycles per second), the BZT-compliant system avoids the crowded 900 MHz band used by many cordless telephones and other wireless audio/video transmitters. It's superior quality is due to wide-band FM rather than AM signal modulation. Circular polarized high-gain directional transmitting and receiving antennas are used to minimize interference from unwanted signals and maximize the signal range.

The system also integrates an UHF remote control extender to allow you to control the audio or video source from another room using your existing remote controller (not available with M411).

Using the system, you can enjoy greater convenience and security in many ways:

General Application

- Watch the movie you rent on any TV in your home without moving you VCR, DVD, VCD player or runing messy cables.
- Watch cable or satellite programs on any TV in your home.
- Listen to stereo-quality music from your receiver on any powered speakers inside or outside the home.
- Show computer images on a remote TV (additional equipment required)

Safety & Security Application:

- Monitor your sleeping baby, your playing children, the elderly, or the disabled on your TV using your existing camcorder.
- See who is outside your door on TV through your camera or miniature CCD camera.
- And many more uses!

B. Description of Box Contents

Check to make sure that all of the items shown as below are included with your system. If something is missing, please contact your dealer as soon as possible.

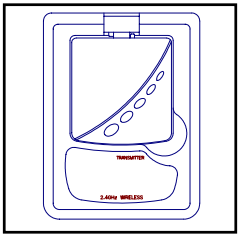

1.Transmitter (model M201* or M200) X 1
* M201 with Remote Receiver
M200 W/O Remote Receiver

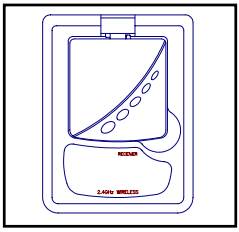

2.Receiver (Model M301* or M300) X 1
* M301 with Remote Transmitter
M300 W/O Remote Transmitter

3.Power adapters (230VAC to 9 VDC) X 2
or (110VAC to 9VDC) X 2

OPTIONS:
a.Audio/Video RCA cable X 2

b. RCA to scart connector A/V cable X 2
- one for transmitter
- one for receiver

c.IR extender to connect to
transmitter's rear panel X 1

C. Panel Controls and Features

The following illustrations show the names of each components, switch and connectors on the transmitter and receiver.

LEFT VIEW FOR M301 AND M300
M201 M200

- Power ON/OFF Switch

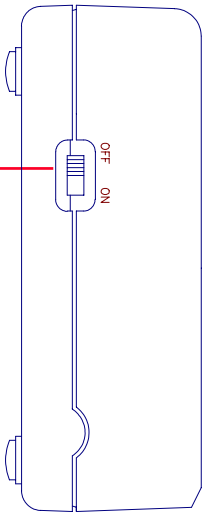

TOP VIEW FOR M301 and M300
M201 M200

- Directional 2.4GHz antenna receives audio and video.

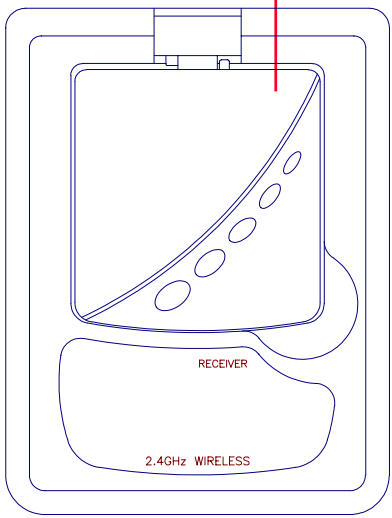

FRONT VIEW FOR M200 AND M300
M201 M301

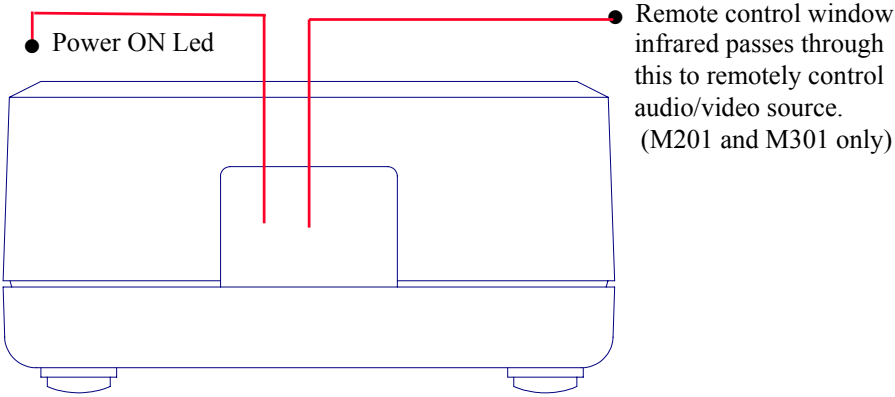

REAR VIEW FOR M301 AND M300

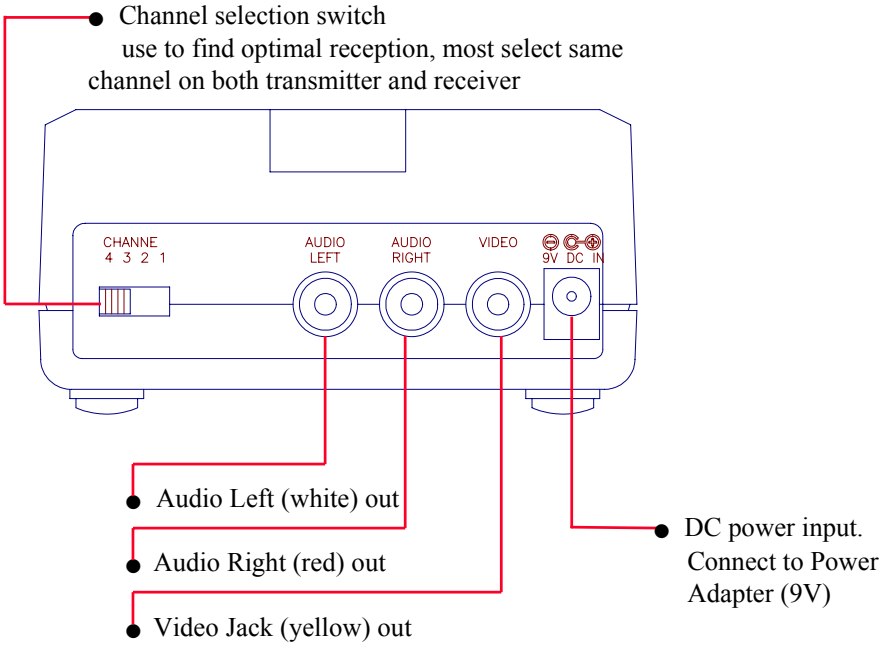

REAR VIEW FOR M201 AND M200

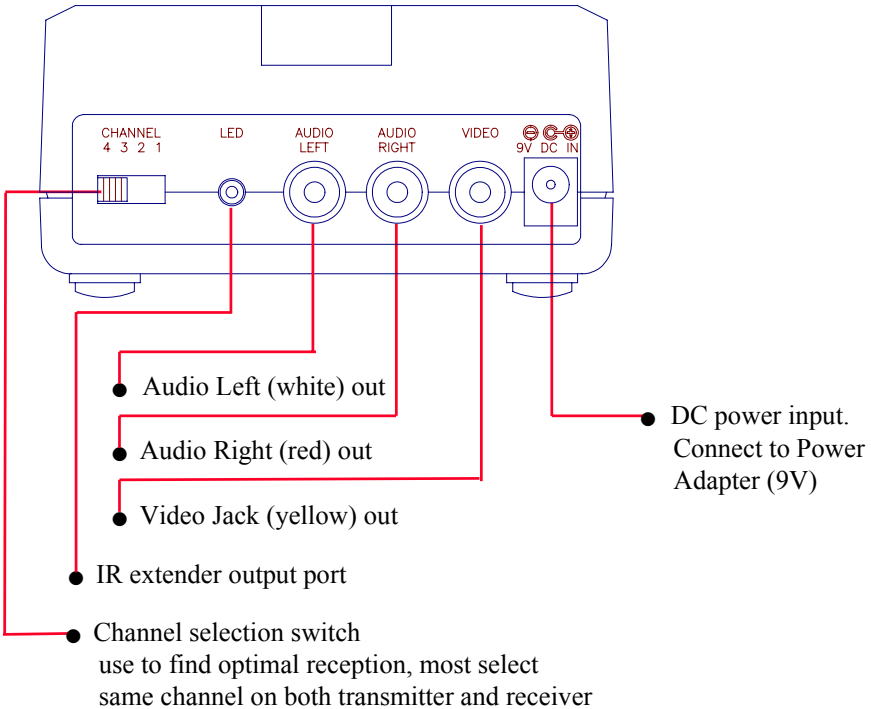

D. Setting Up System

To enjoy wireless video and audio, just connect the transmitter (Model M200 or M201) to whatever audio/video source you want to enjoy from another location, and connect the receiver(M300 or M301) to the TV, monitor or powered speakers in that other location.

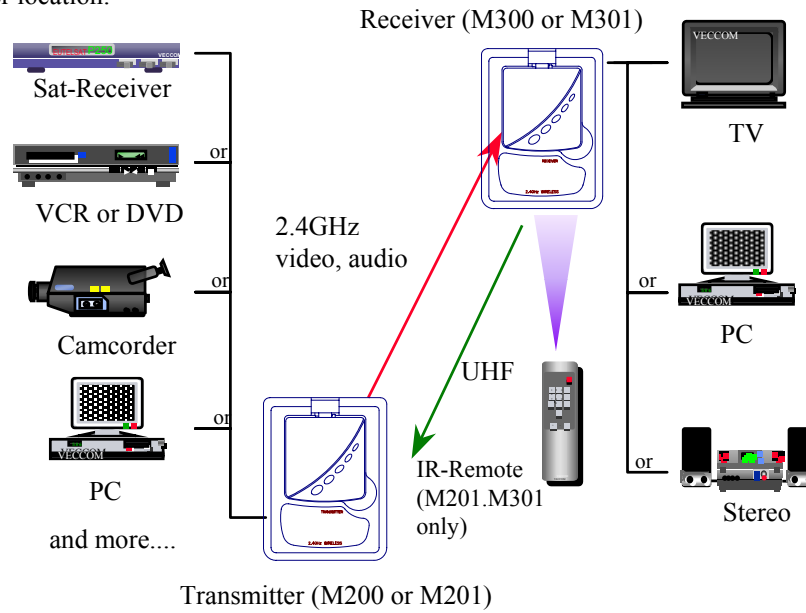

The system is suggested to connect to following A/V equipment use:

Video sources:

- VCR
- Cable set-top box (with A/V output)
- Satellite Receiver
- VCD, DVD,Laser Disc Player
- Camcorder or Miniature CCD Camera
- Computer

Audio sources:

- Compact Disk Player or Changer
- Stereo Receiver
- Cassette Deck

The following pages will show you how to connect transmitter to some of these A/V equipment and then demonstrate how and where to connect and fine a good position for receiver.

☐ How To Transmit Audio/Video from Your VCR

1. Connect one set of audio/video(A/V) cables (or scart cable labeled "TRANSMITTER") to the A/V jacks of the transmitter (M200 or M201) and to the A/V output jacks (or scart connector) on the back of your VCR. Be sure the yellow, red and white plugs match the yellow, red and white jacks on both the VCR and the transmitter. If the VCR has only one output for audio (mono sound only), connect the white plug to that single audio output and to transmitter's AUDIO LEFT jack.
2. Plug one end of the power adapter into the back of the transmitter and the other end into any 230-volt wall outlet (or 120-volt). Use only the adapter provided.

NOTE make sure the ON/OFF switch is in the 「OFF」 position before connection

3. If your VCR has only one set of A/V output jacks and you want to use it with a nearby TV, connect 75 ohm RF coaxial cable from the modulator signal OUT port on your VCR to the VHF/UHF IN port on your TV. (Note:In order to also view cable programs on that TV, connect your incoming cable TV source to the IN port of the VCR.)

4. Locate and orient the transmitter according to the section of this manual titled "Orienting Units for Optimal Performance" for best performance of transmitter.

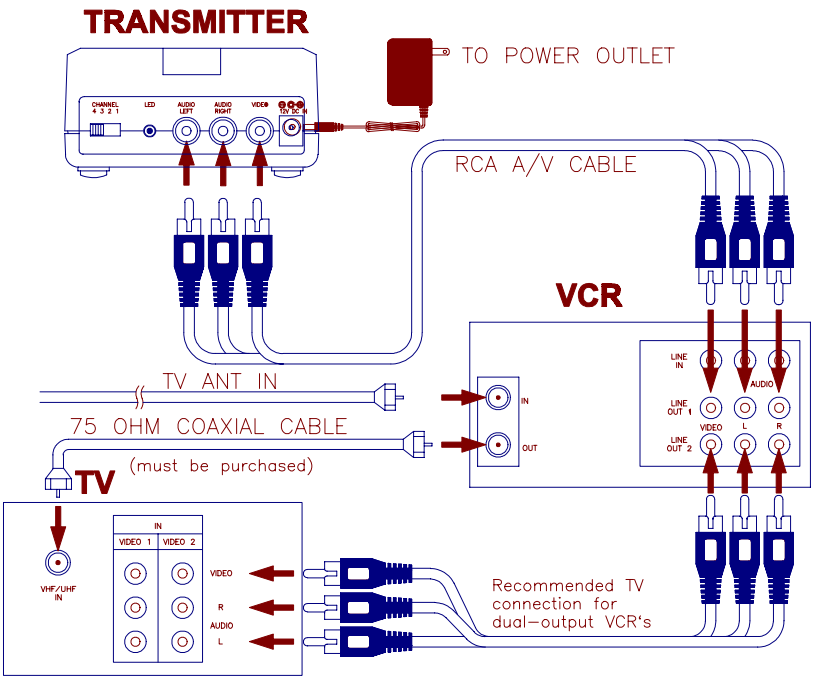

☐ How To Transmit Audio/Video from Your Satellite Receiver

You can transmit audio/video either directly from your satellite receiver, or by connecting them to your VCR. To transmit directly from your satellite receiver, follow the instructions below.

1. Connect one set of audio/video (A/V) cables (or scart cable labeled "TRANSMITTER") to the A/V jacks of the transmitter (M200 or M201) and to the AUDIO/VIDEO OUT jacks (or scart connector) of the satellite receiver or laser disc player. Be sure the yellow, red and white plugs match the yellow, red and white jacks on both the satellite receiver/laser disc player and the transmitter.

2. Plug one end of the power adapter into the back of the transmitter and the other end into any 230-volt (or 120-volt) wall outlet. Use only the adapter provided.

NOTE make sure the ON/OFF switch is in the 「OFF」 position before onnection

3. If your satellite receiver or laser disc player has only one set of A/V output (or scart connector) jacks, in this case, please connect 75 Ω RF coaxial cable from satellite receiver's modulator output port to TV VHF/UHF input terminal.

4. Locate and orient the transmitter according to the section of this manual titled "Orienting Units for Optimal Performance" for best transmitter performance.

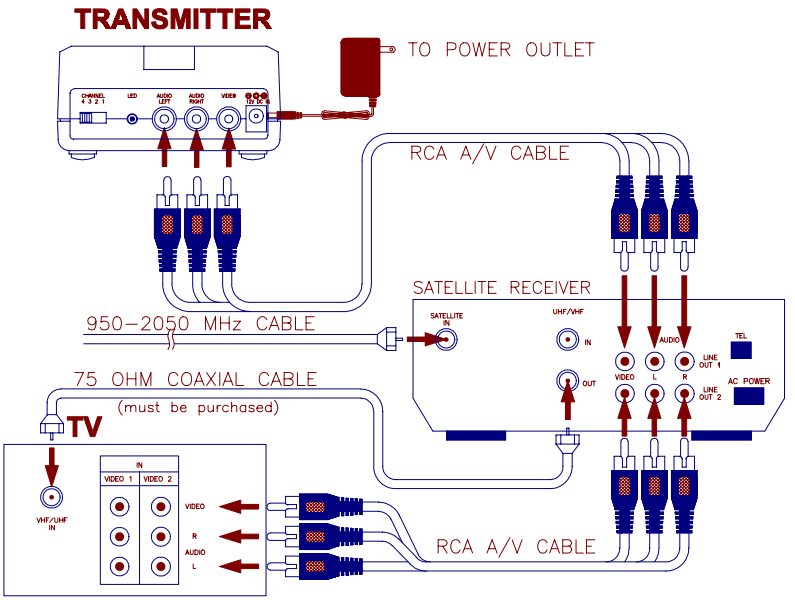

Connecting the Receiver

☐ **How To Receive Wireless Audio/Video on Your TV**

There are two ways to receiver wireless audio/video signals on your remote TV (TV in another location such as in bedroom, kitchen)

· Connect the receiver directly to the remote TV
· Connect the receiver to a VCR, which is then connected to the TV.

NOTE

If your TV has picture-in-picture capabilities, you can view any image transmitted by system, such as your sleeping baby, in a small inset picture while enjoying other programming on the rest of the screen. Consult the owner's manual of your TV for instructions on using these capabilities.

Connecting Receiver Directly to Remote TV

1. If your TV has A/V jacks, connect one set of A/V cables (or scart cable labeled "Receiver") to the TV's A/V jacks and to the A/V output jacks on the receiver (M300 or M301). Be sure the yellow, red and white plugs match the yellow, red and white jacks on both the TV and the receiver.
   If the TV has only a single jack for audio input, connect the white plug to that jack.

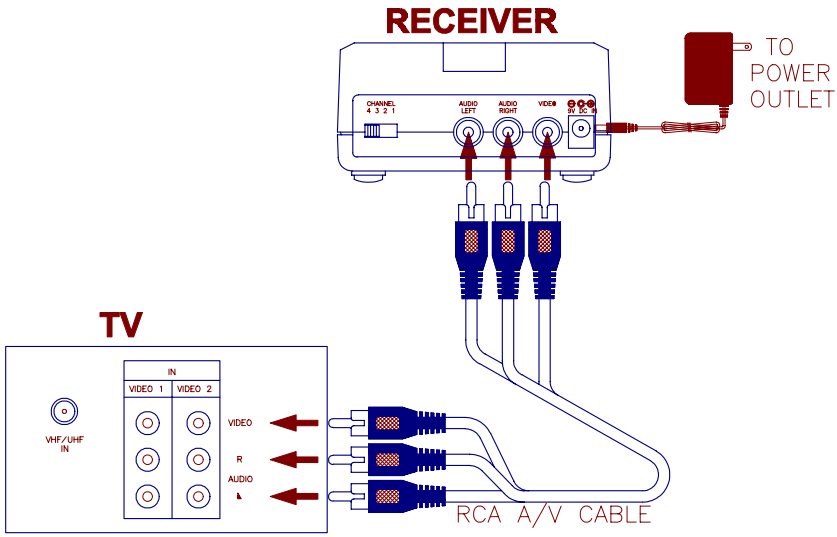

☐ Connecting Receiver to Remote TV through VCR

This setup enables you to record transmitted audio and video on your remote VCR and also enjoy the picture and sound on a remote TV at the same time.

1. Connect one set of audio/video (A/V) cables to the A/V output jacks of the receiver (M300 or M301) and to the A/V input jacks on your VCR. Be sure the yellow, red and white plugs match the yellow, red and white jacks on both the system receiver and the VCR. If the VCR has only a single jack for audio input, connect the white plug to it.

2. If your TV has A/V input jacks, connect another set of A/V cables to the TV's A/V input jacks and to the A/V output jacks on your VCR.

3. If your TV does not have any A/V input jack, in this case, please connect a 75 ohm coaxial cable from the TV's antenna in (or VHF/UHF in) to VCR's modulator output.

NOTE this feature is optional

4. Plug one end of the power adapter into the back of the receiver and the other end into any 230 volt (or 120 volt) wall outlet. Use only the adapter provided.

NOTE make sure the ON/OFF switch is in the 「OFF」 position before connection

5. Locate and orient the receiver to best video and sound quality please according to the section of this manual titled "Orienting Units for optimal Performance.

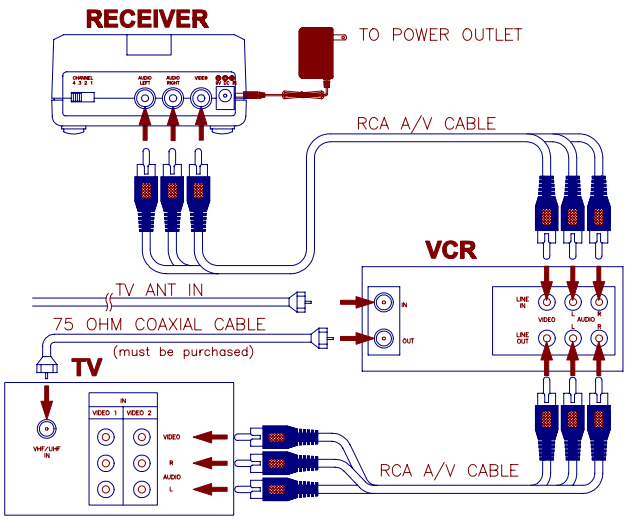

E. Orienting Units for Optimal performance

NOTE The system should be placed on a flat, stable surface to prevent damage to it from falling. For uneven or slick surfaces, such as the top of your TV, audio/video equipment, or entertainment center, fastener strips have been provided to secure the units (cut the strips into smaller squares with scissors).

For optimal performance, both the audio/video and remote control antennas should be carefully oriented as described below. In addition, to use the remote extension feature (available with M201 and M301 only), the transmitter itself must be specially oriented so it can relay the converted remote control signal back to the audio/video source (see following section titled "Using The Remote Control extension Feature"). For maximum operating range, try to minimize the number of obstacles (e.g. your TV or other electronics, large furniture) Where between the transmitter and receiver units.

Orienting the Audio/Video Antennas

The system broadcast their high-quality audio and video using directional antennas which must be oriented in certain configurations for best results. The antennas have been designed to pivot and rotate in-almost any direction.

In most situation, the flat pitted face of the antennas on both the transmitter and receiver should be facing one another and perpendicular (at a right angle) to an imaginary line drawn between the two units. Three examples are shown Fig-1, Fig-2 and Fig-3. Since all homes are different, for optimal reception, additional slight pivots or rotations may be necessary. If the transmitter and receiver are less than 10 feet apart, suggest to keep the antennas flat in their casings since the distance so short.

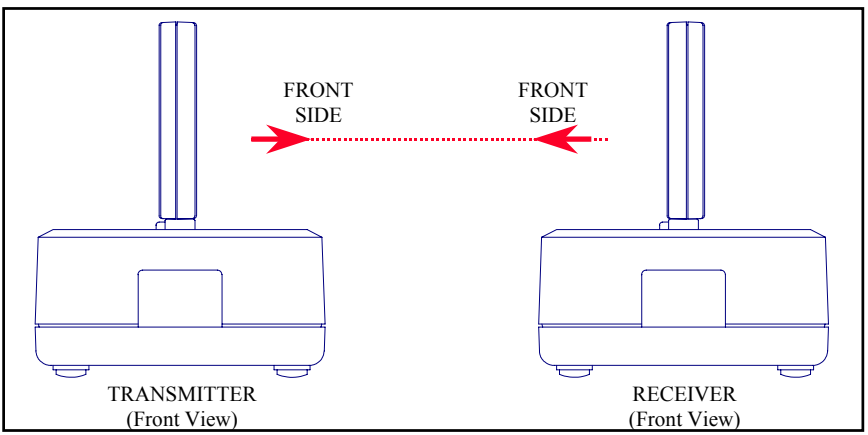

Fig-1: How to orienting the 2.4GHz audio and video antennas.

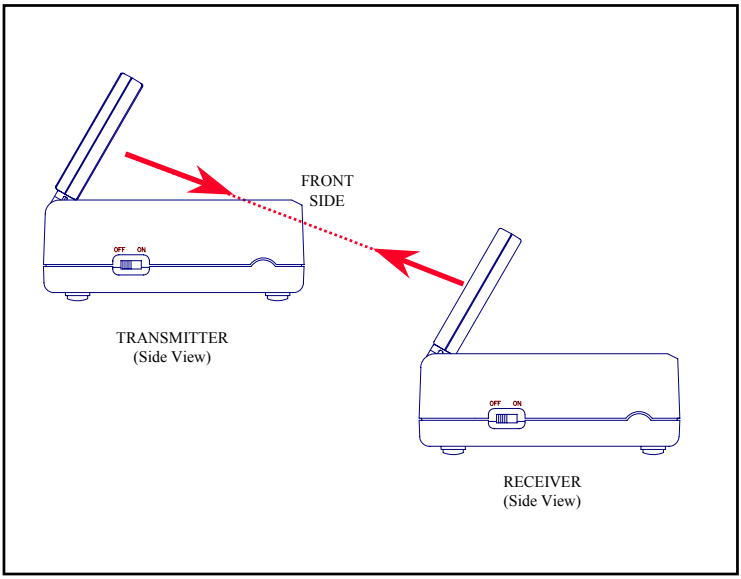
FRONT
SIDE
OFF ON
TRANSMITTER
(Side View)
OFF ON
RECEIVER
(Side View)

Fig-2:

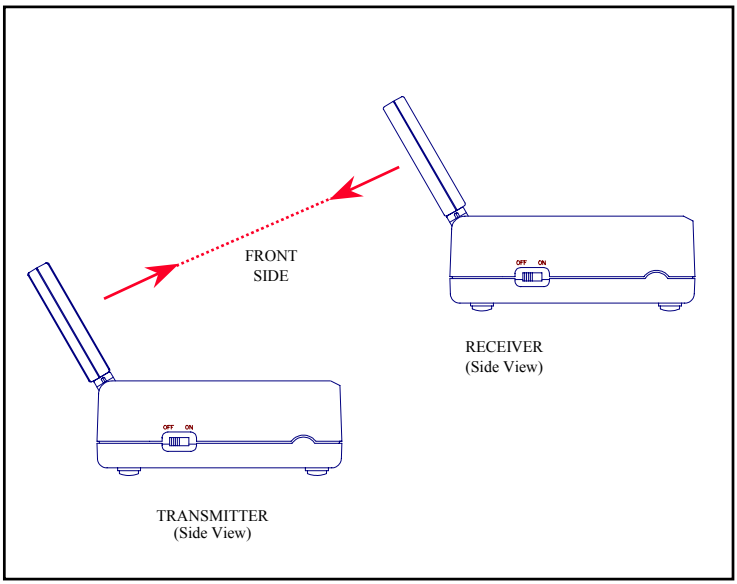
FRONT
SIDE
OFF ON
RECEIVER
(Side View)
OFF ON
TRANSMITTER
(Side View)

Fig-3:

F. Using the Remote Control Feature (M201 and M301 only)

The system not only allows you to send crisp audio/video from one area to another, it also gives you the ability to control the source using your existing remote control device (feature not available on M200 and M300). It converts the infrared (IR) signal emitted by your remote control to a radio frequency (RF) signal in UHF band at the receiver (M301) and sends it back to the transmitter (M201) where the RF signal is converted back to the original IR signal and beamed to the audio/video source.

There are two ways to get your source A/V equipments to be control by using existing remote control thru remote control feature.

1. To orient the transmitter (M201) unit face to face the source A/V equipment, this would allow the converted IR signal which from M201 IR remote control window be able to send to the source A/V equipment(s) front panel.

2. Simple connect an IR extender from transmitter and locate this IR extender near the source A/V equipment from panel.

Sometimes, it may be difficult or even impossible to orient the transmitter unit such that it can be "seen" (means face-to-face) by the A/V equipments you wish to control. perhaps there is no good surface that allows for this Or perhaps you wish to control. Or perhaps you wish to remotely control A/V equipments in different locations without re-orienting the system transmitter. So, in this case, to use in extender will more convenience.

☐ How To Use the IR Extender Accessory

The IR extender connects to the transmitter through its own special connector plug. The extender emits an IR signal, bathing your AV equipment with the remote signal. To use the IR extender, follow the instructions below.

1. Plug the IR extender into the transmitter in rear panel.

2. Orient the end of the IR extender so that it points in the general direction of the IR sensors of the source AV equipment you wish to control. Use soft pad of provided to secure the IR extender always in it's position.

3. Position the receiver so that your remote control signal can strike the IR window on the bottom front of the unit. To use your remote control, point it at the front of the receiver.

G. Troubleshooting, Care and maintenance

Please read this owner's manual carefully and follow the steps described in it. If you still have difficulties, consult the following table. It will guide you though the most common problems and their solutions.

Problem	Possible solutions
No picture or sound	· Check the power on/off switches on the transmitter and receiver · Check power switches on the remote TV and video source (VCR, laser disc player, satellite receiver, ect.) · Make sure power plugs are pushed all the way in · Check all cable connections
Interference: Noisy picture or audio	· Adjust receiver and transmitter antenna orientation (see section on "Orienting Units for Optimal Performance" in this Manual) · Select a different channel by pushing the channel selector button on both transmitter and receiver so that the channels match · If using a microwave oven, turn it off · Remove microwave oven from path between transmitter and receiver.
Remote control extender does not work (M201 and M301 only)	· Check the path between the transmitter and the audio/video source and clear any obstructions. · Check to see if the IR window on the front of the transmitter is blocked · Make sure IR extender is properly rotated in the A/V equipment you wish to control (see section on "Using the Remote Control Feature" in this manual)

NOTE Clean the outside plastic packaging with a soft cloth lightly moistened with mild soap and water. Never use any abrasive scouring powder or solvent.

H. Specifications

Transmitter:	
Output Level	90 dB microvolts/meter at 3 meters (comply with FCC, BZT)
Operating Frequency Band	2.4 to 2.4835 GHZ
Modulation	FM (video and audio)
Video Input Level	1V p-p @ 75 ohm
Audio Input Level	1V p-p @ 600 ohm
Video Input Impedance	75 ohms
Audio Input Impedance	600 ohms
Power consumption	9 Vdc, 120 mA
Dimensions	12.8 X 9.7 X 5.0 cm (5.0 X 3.8 X 2.0 inches)
Weight	266g (9.4 ounces)
Receiver:	
Output Level	1 volt p-p (video), 1 volt p-p (audio)
Noise Figure	3.5 dB
Power Consumption	9 Vdc, 300 mA
Remote Control Transmitter Frequency	433.92 MHz (PAL)，418MHz (NTSC)*
Dimensions	12.8 X 9.7 X 5.0 cm (5.0 X 3.8 X 2.0 inches)
Weight	266g (9.4 ounces)

* For Model M301 only
All specifications are subject to change without notice.