Ethernet Controller
Ethernet Controller.sch

Battery Charger
Battery Charger.sch

Interface
Interface.sch

Power Supply
Power Supply.Sch

Confidential

Copyright (C) 2001-2004 REnex Technology Limited. All rights reserved. No part of this document may be reproduced or utilized in any form or by any means, electronic or mechanical, including photocopying and microfilm, without permission in writing from REnex Technology Limited.

Organization: REnex Technology Limited

Title: EC0112 Master Sheet

File: EC0112 Master Sheet.Sch

Revision: EC0112 | Date: 4-May-2004 | Sheet 1 of 5

Designed by: Derek Wong, Lu Kui

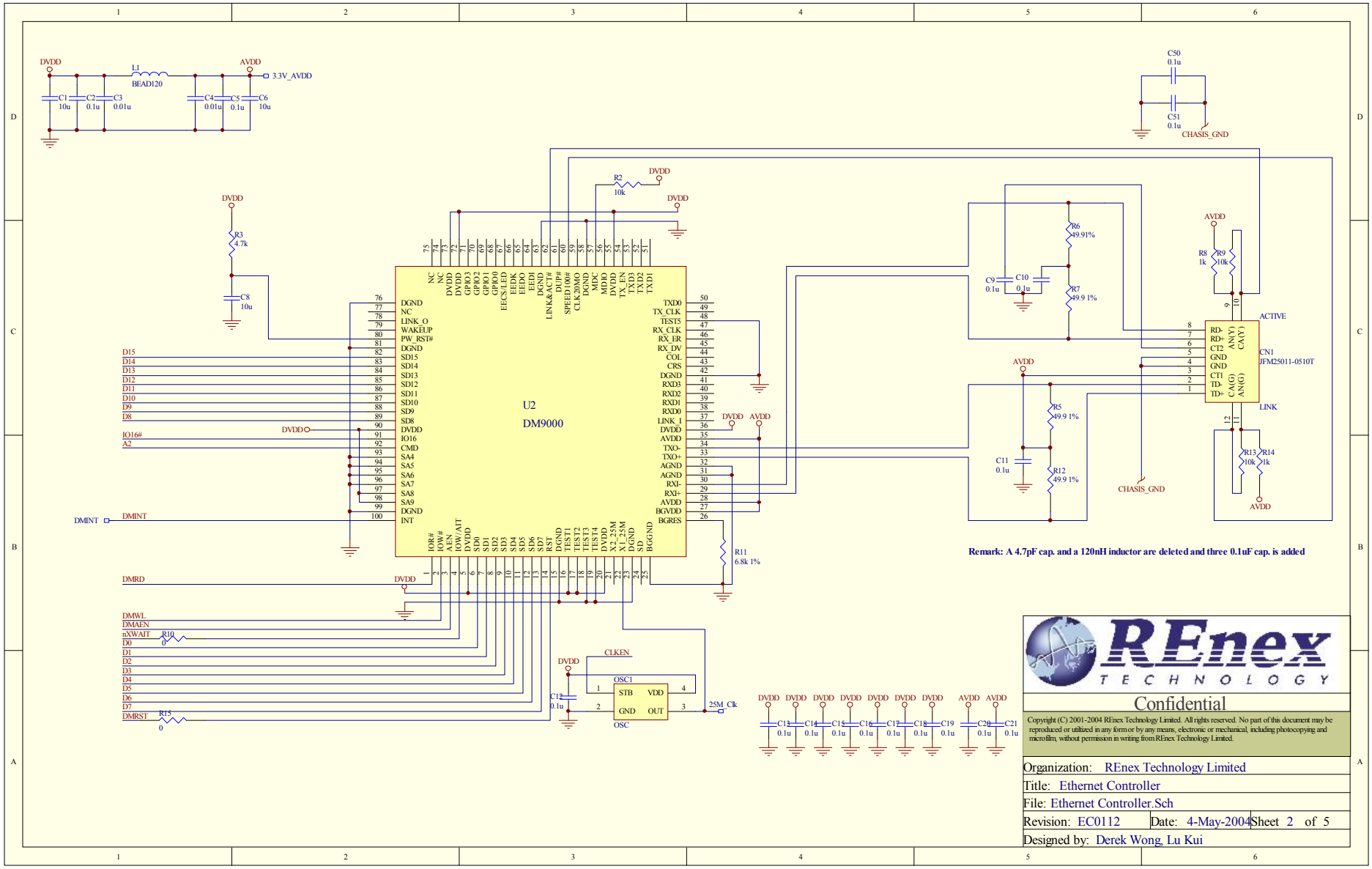

REnex TECHNOLOGY

Confidential

Copyright (C) 2001-2004 REnex Technology Limited. All rights reserved. No part of this document may be reproduced or utilized in any form or by any means, electronic or mechanical, including photocopying and microfilm, without permission in writing from REnex Technology Limited.

Organization:	REnex Technology Limited
Title:	Ethernet Controller
File:	Ethernet Controller.Sch
Revision: EC0112	Date: 4-May-2004 Sheet 2 of 5
Designed by:	Derek Wong, Lu Kui

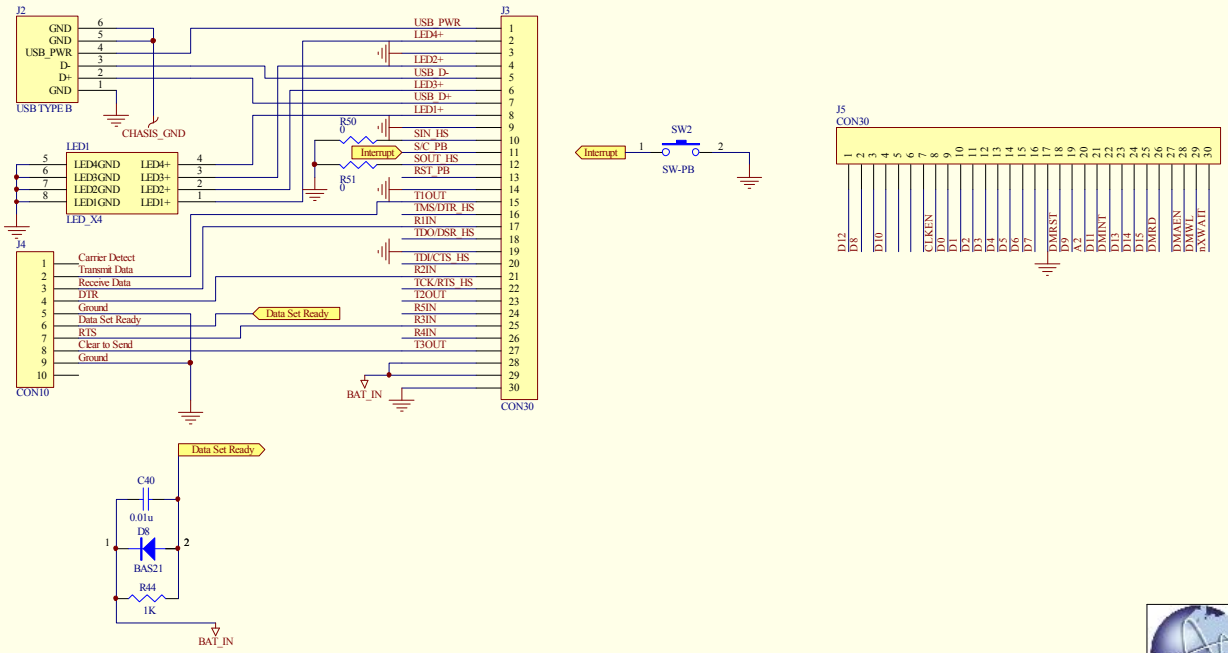

Confidential

Copyright (C) 2001-2004 REnex Technology Limited. All rights reserved. No part of this document may be reproduced or utilized in any form or by any means, electronic or mechanical, including photocopying and microfilm, without permission in writing from REnex Technology Limited.

Organization:	REnex Technology Limited	
Title:	Interface	
File:	Interface.Sch	
Revision: EC0112	Date: 4-May-2004	Sheet 3 of 5
Designed by:	Derek Wong, Lu Kui	

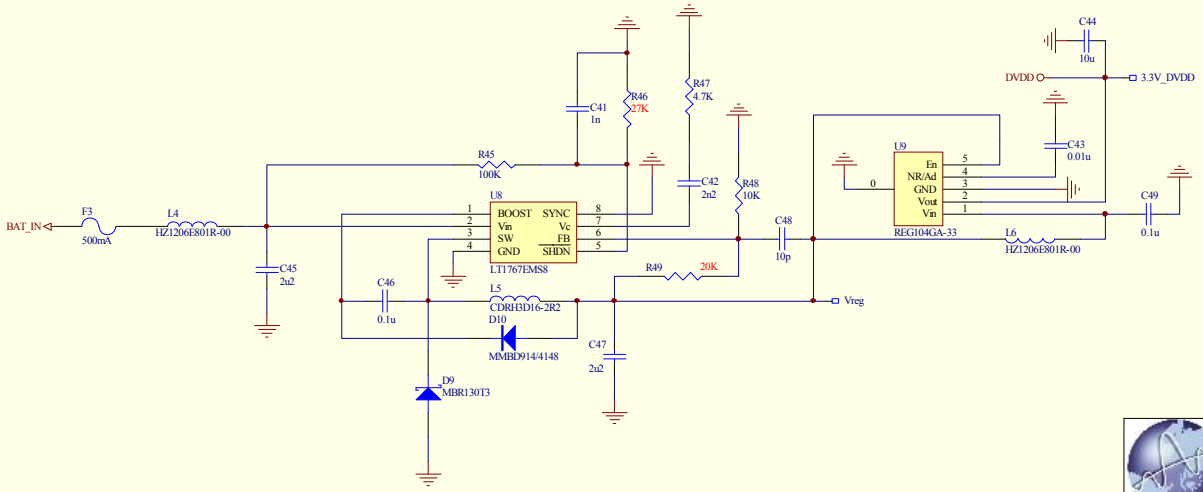

Confidential

Copyright (C) 2001-2004 REnex Technology Limited. All rights reserved. No part of this document may be reproduced or utilized in any form or by any means, electronic or mechanical, including photocopying and microfilm, without permission in writing from REnex Technology Limited.

Organization: REnex Technology Limited

Title: Power Supply

File: Power Supply.Sch

Revision: EC0112 | Date: 4-May-2004 | Sheet 4 of 5

Designed by: Derek Wong, Lu Kui

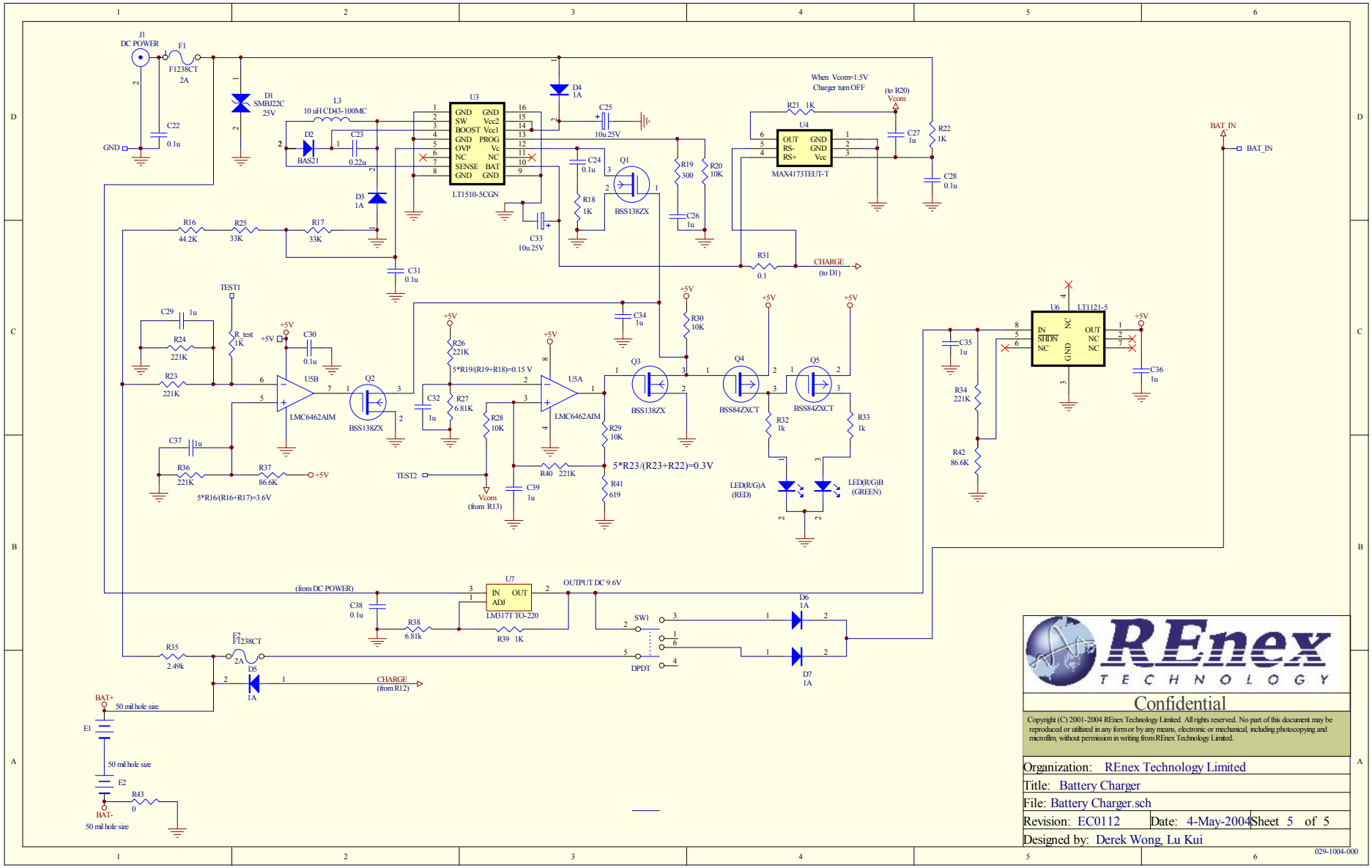

REnex TECHNOLOGY

Confidential

Copyright (C) 2001-2004 REnex Technology Limited. All rights reserved. No part of this document may be reproduced or utilized in any form or by any means, electronic or mechanical, including photocopying and microfilm, without permission in writing from REnex Technology Limited.

Organization: REnex Technology Limited		
Title: Battery Charger		
File: Battery Charger.sch		
Revision: EC0112	Date: 4-May-2004	Sheet 5 of 5
Designed by: Derek Wong, Lu Kui		

029-1004-000

MCU
MCU.sch

XD 0..15	RSTB
XA 1..20	VBUSOUT
UART	SETUP/CONFIG
CS0B	RXD
WREB_WRLB	NRW
NWRH	CS1B
NRD	CLKOUT24M
D+	DMINT
D-	nXWAIT
CLK12M	
P_ISO_IN	
SEC_PD	
SDA	
SCL	
WC	
REST_CONTR	
RX LED	
TX LED	
P31	
OK LED	
POWER LED	
INT_043o	
CPU_PWM0	
RXC	
TXD	
P71	
P72	
CPU_PWM1	
DMRST	
TXC	

CPLD
CPLD.sch

FLASH0_OEB	CLK_MAIN_D
FLASH0_WEB	CS0B
RSTB	WREB_WRLB
SRAM0_WEB	RESETB
SRAM0_HBB	NRD
SRAM0_LBB	NWRH
SRAM0_OEB	REST_CONTR
SX043_RD	VBUSIN
SRAM_CS0	XA 1..18
FLASH0_CS	CPU_PWM0
USB_EN	VGC_PWM0
D 0..15	P72
XD 0..15	P71
A 1..17	SEC_PD
INT_043	SX061_REST
INT_043o	P_ISO_IN
P31	NRW
CLK_2M	CS1B
SX043_CS	VGC_PWM1
VBUSOUT	CLK12M
VGC_PWM0	CLKOUT24M
SX043_WL	
RF2163 PC	
SX043_REST	
VGC_PWM1	
HMC287 PC	
CPU_PWM1	

Memories
Memories.sch

D 0..15	A 1..17
SDA	FLASH0_OEB
D 0..15	FLASH0_WEB
	SRAM0_OEB
	SRAM0_WEB
	SRAM0_HBB
	SRAM0_LBB
	WC
	SCL
	SRAM_CS0
	FLASH0_CS
	RSTB

Baseband
Baseband.sch

INT_043	SX043_REST
SDATA	SX043_CS
SENB	SX043_RD
SCLK	SX043_WL
ENABLE0_061	SCLK
SDATA	ENABLE0_061
TDX0	SX061_REST
TDX1	CLK_2M
D5 0..7	CLK_2M
LNA_GS	IF2 IN
RX_EN	
TX_EN	
PD_2938	
RF2938 AGC	
RX_EN 2938	
TX_EN 2938	
PWDNB	

Interface & front panel
Interface & front panel.sch

VBUSIN	USB_EN
UART	TX LED
RESETB	RX LED
D+	OK LED
D-	POWER LED
nXWAIT	SETUP/CONFIG
RXC	RXD
TXD	TXC

Power Supply
Power Supply.sch

	SEC_PD
	SEC_PD
	SEC_PD

RF2938 Transceiver
RF2938 Transceiver.sch

IF2 OUT	PA IN
RF OUT	RX IF IN
RF TX LO	TX_EN 2938
TX IF OUT	PD_2938
TX IF OUT	TDX0
RF OUT	TDX1
PA OUT	TX IF IN
IF2 OUT	IF LO
RF2938 RSSI	SAW1 IN
	BPF1_IN
	BPF2_IN
	IF2 IN
	RF2938 AGC
	RX_EN 2938

DOWNLINK
DOWNLINK.sch

RF RX LO	LNA_GS
MIX OUT	LNA IN
MIX OUT	SAW2 IN
RX IF AGC1 OUT	RX IF AGC1 IN
RX IF AGC1 OUT	RX_EN
LNA OUT	SAW3 IN
LNA OUT	BPF4_IN
HMC287 PC	MIX IN
LNA1_IN	
LNA1_OUT	
LNA1_OUT	
RF SAW IN	

UPLINK & Antenna
UPLINK & Antenna.sch

PA1_OUT	BPF3_IN
PA1_OUT	ANT_SW_IN
ANT_SW_OUT	LNA1_IN
ANT_SW_OUT	RF2163 PC
TX_EN	PA1_IN
RX_EN	

Synthesizer & TCXO
Synthesizer & TCXO.sch

TX_EN	SDATA
IF LO	SCLK
RF RX LO	SENB
RF TX LO	CLK_MAIN
CLK_MAIN	CLK_MAIN_D
PWDNB	CLK12M

Filters
Filters.sch

BPF1_OUT	BPF1_IN
SAW1 OUT	SAW1 IN
BPF2_OUT	BPF3_IN
BPF3_OUT	RF SAW IN
RF SAW OUT	RX IF IN
SAW3 IN	SAW2 IN
SAW2 OUT	RX IF AGC1 IN
SAW2 OUT	PA IN
BPF1_OUT	PA1_IN
BPF2_OUT	ANT_SW_IN
BPF3_OUT	TX IF IN
SAW1 OUT	RF SAW OUT
BPF4_OUT	LNA IN
BPF4_OUT	BPF4_IN
	MIX IN

REnex TECHNOLOGY

Confidential

Copyright (C) 2001-2002 REnex Technology Limited. All rights reserved. No part of this document may be reproduced or utilized in any form or by any means, electronic or mechanical, including photocopying and microfilm, without permission in writing from REnex Technology Limited.

Organization: REnex Technology Limited
Title: Wireless Modem WM0144 Master Sheet
File: Wireless Modem WM0144 Master Sheet.sch
Revision: WM0144 | Date:4-May-2004 | Sheet 1 of 12
Designed by: Yiguang MA & Kui LU

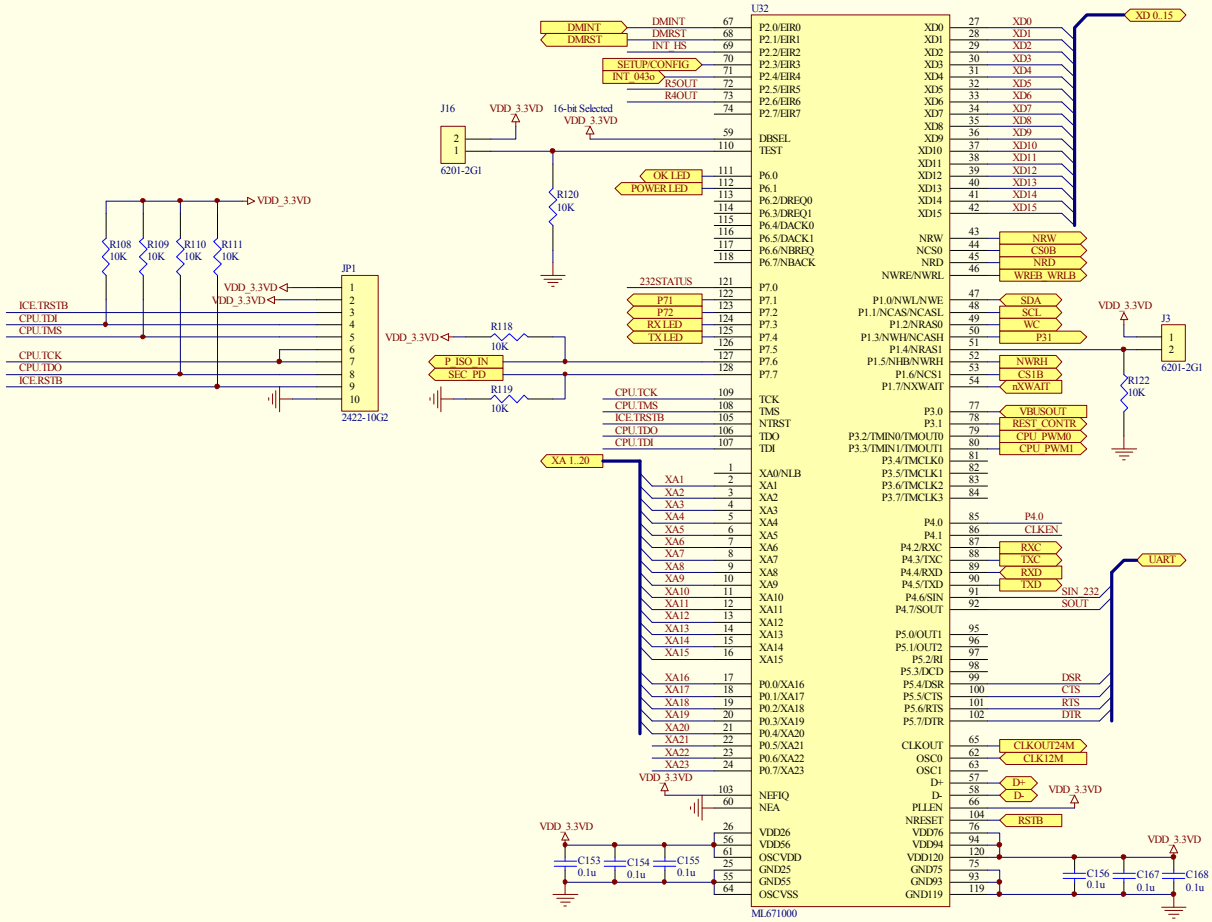

Confidential

Copyright (C) 2001-2002 REnex Technology Limited. All rights reserved. No part of this document may be reproduced or utilized in any form or by any means, electronic or mechanical, including photocopying and microfilm, without permission in writing from REnex Technology Limited.

Organization: REnex Technology Limited

Title: MCU

File: MCU.sch

Revision: WM0144 | Date:4-May-2004 | Sheet 2 of 12

Designed by: Yiguang MA & Kui LU

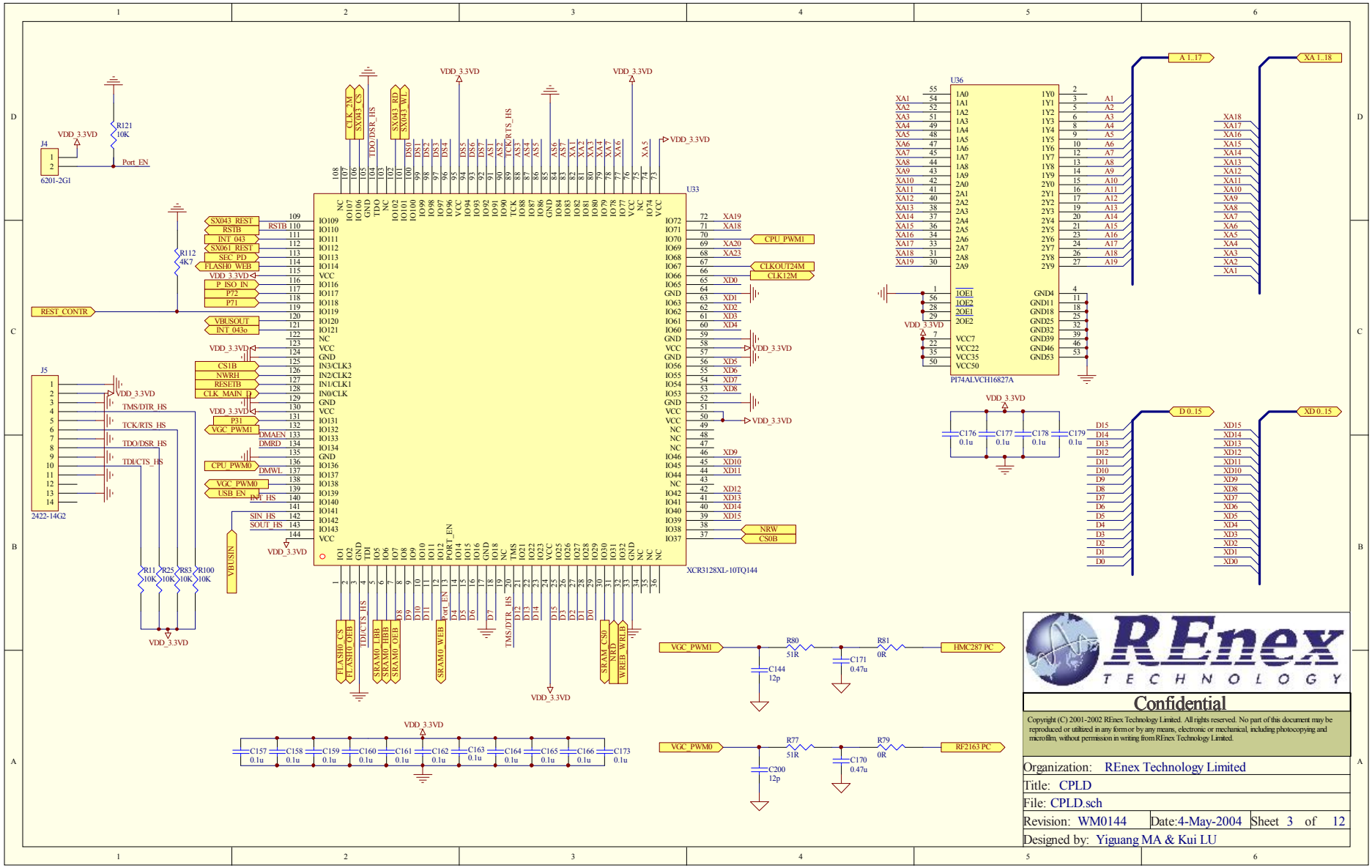

REnex TECHNOLOGY

Confidential

Copyright (C) 2001-2002 REnex Technology Limited. All rights reserved. No part of this document may be reproduced or utilized in any form or by any means, electronic or mechanical, including photocopying and microfilm, without permission in writing from REnex Technology Limited.

Organization: REnex Technology Limited		
Title: CPLD		
File: CPLD.sch		
Revision: WM0144	Date:4-May-2004	Sheet 3 of 12
Designed by: Yiguang MA & Kui LU		

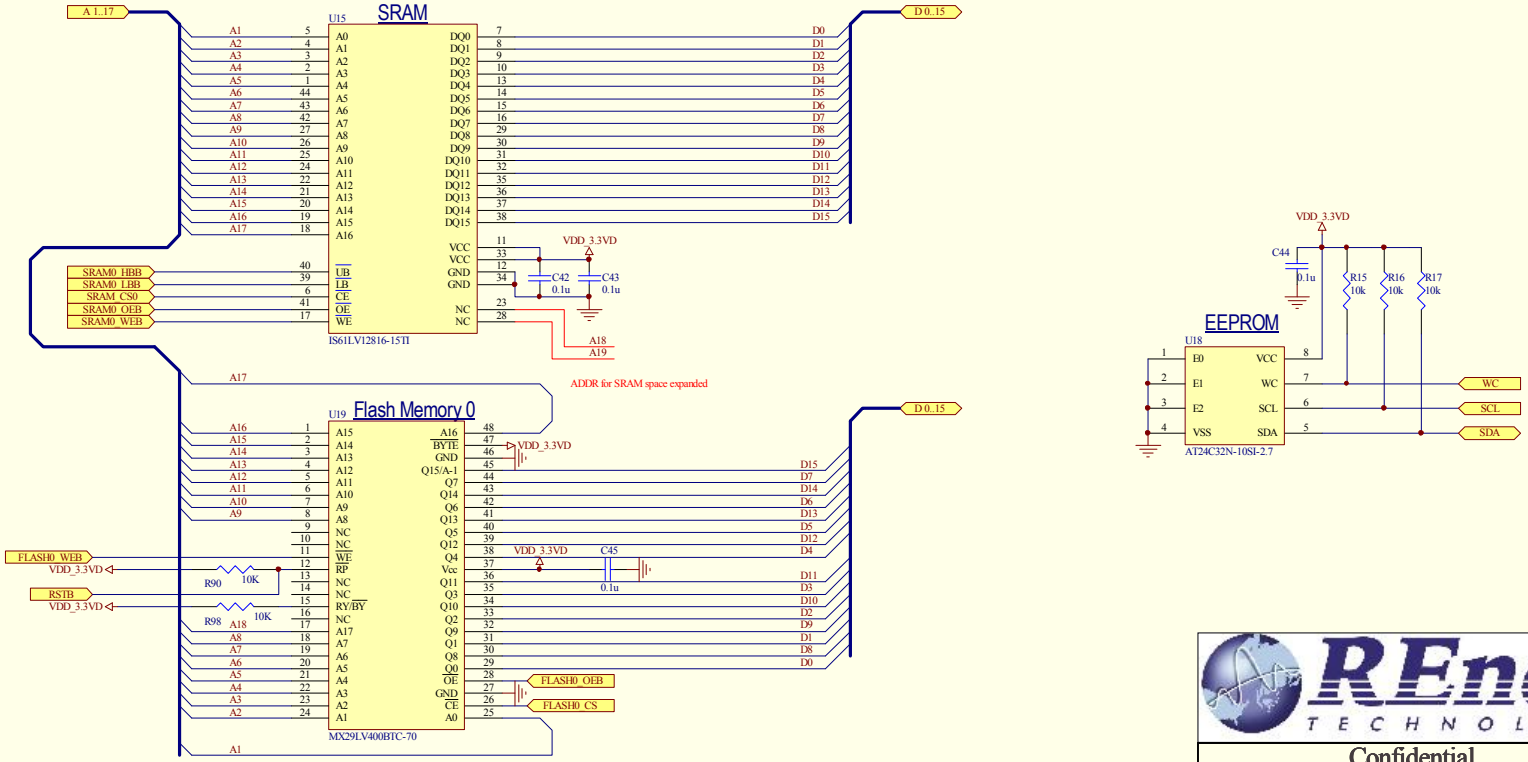

REnex TECHNOLOGY

Confidential

Copyright (C) 2001-2002 REnex Technology Limited. All rights reserved. No part of this document may be reproduced or utilized in any form or by any means, electronic or mechanical, including photocopying and microfilm, without permission in writing from REnex Technology Limited.

Organization: REnex Technology Limited

Title: Memories

File: Memories.sch

Revision: WM0144 | Date:4-May-2004 | Sheet 4 of 12

Designed by: Yiguang MA & Kui LU

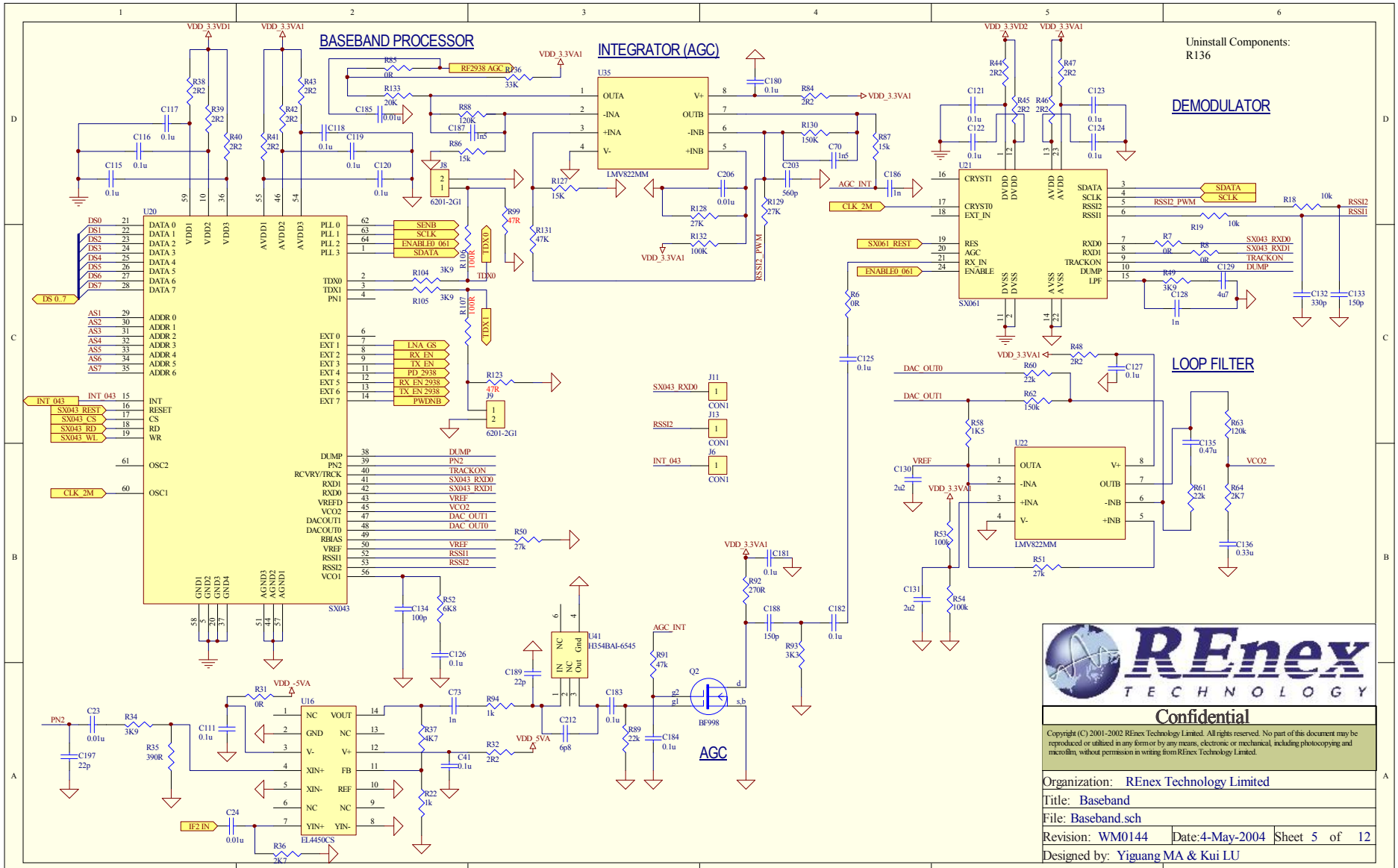

Confidential

Copyright (C) 2001-2002 REnex Technology Limited. All rights reserved. No part of this document may be reproduced or utilized in any form or by any means, electronic or mechanical, including photocopying and microfilm, without permission in writing from REnex Technology Limited.

Organization: REnex Technology Limited

Title: Baseband

File: Baseband.sch

Revision: WM0144 | Date:4-May-2004 | Sheet 5 of 12

Designed by: Yiguang MA & Kui LU

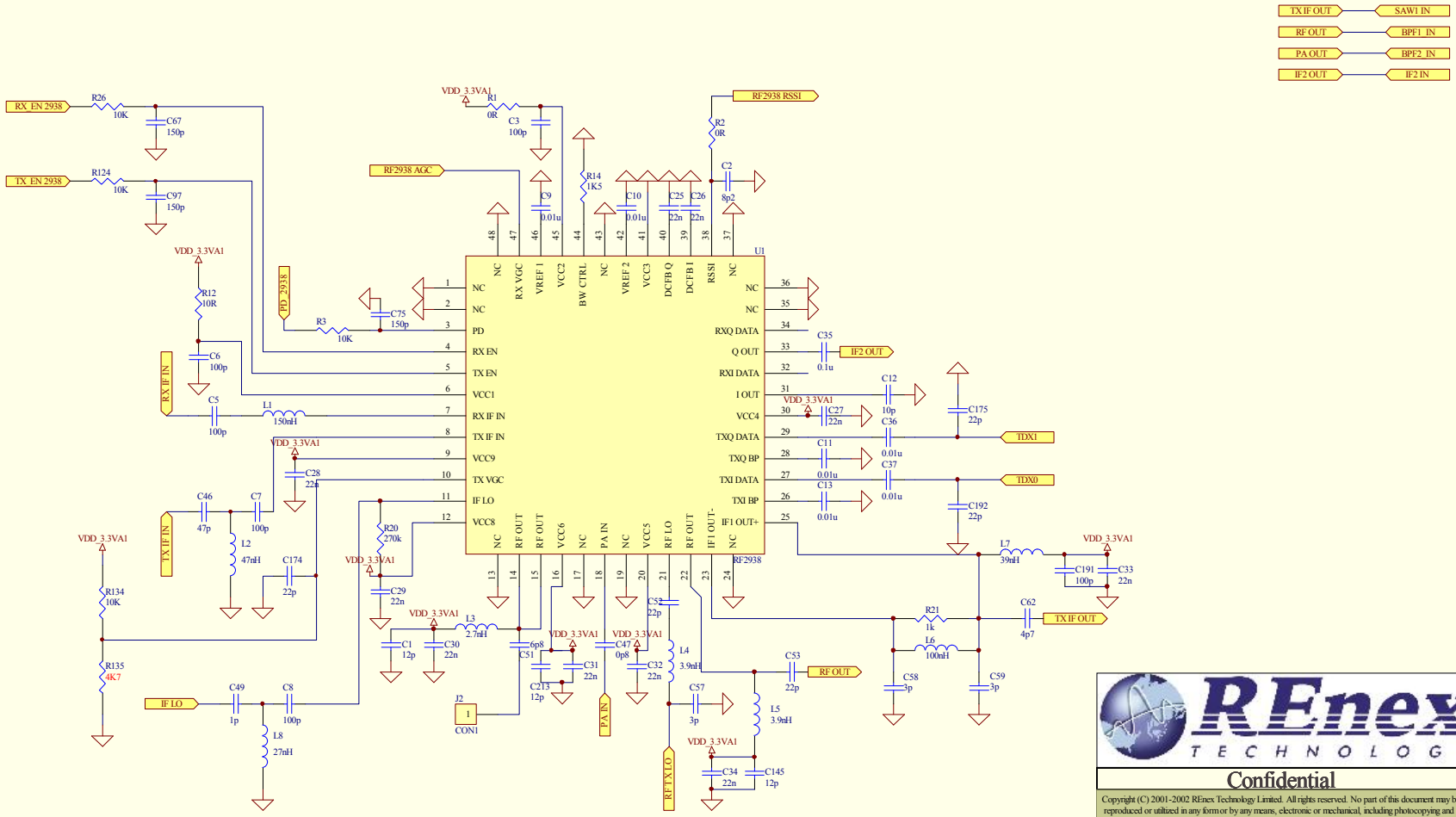

REnex TECHNOLOGY

Confidential

Copyright (C) 2001-2002 REnex Technology Limited. All rights reserved. No part of this document may be reproduced or utilized in any form or by any means, electronic or mechanical, including photocopying and microfilm, without permission in writing from REnex Technology Limited.

Organization: REnex Technology Limited

Title: RF2938 Transceiver

File: RF2938 Transceiver.sch

Revision: WM0144 | Date:4-May-2004 | Sheet 6 of 12

Designed by: Yiguang MA & Kui LU

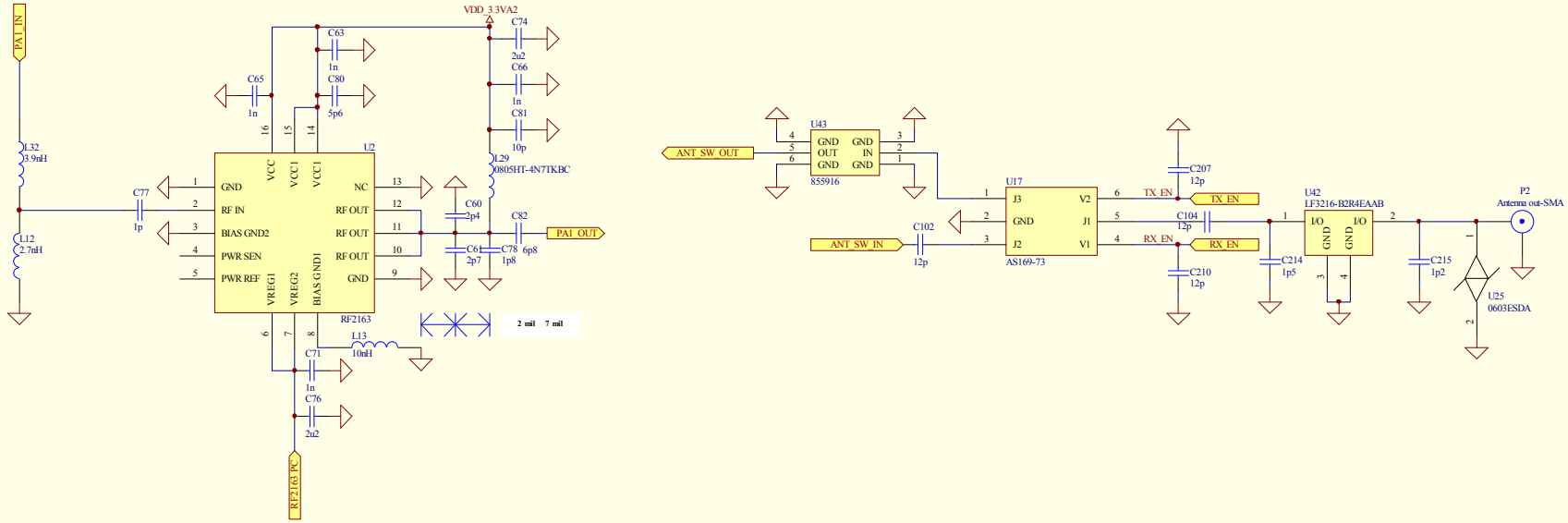

REnex TECHNOLOGY

Confidential

Copyright (C) 2001-2002 REnex Technology Limited. All rights reserved. No part of this document may be reproduced or utilized in any form or by any means, electronic or mechanical, including photocopying and microfilm, without permission in writing from REnex Technology Limited.

Organization: REnex Technology Limited		
Title: UPLINK & Antenna		
File: UPLINK & Antenna.sch		
Revision: WM0144	Date:4-May-2004	Sheet 7 of 12
Designed by: Yiguang MA & Kui LU		

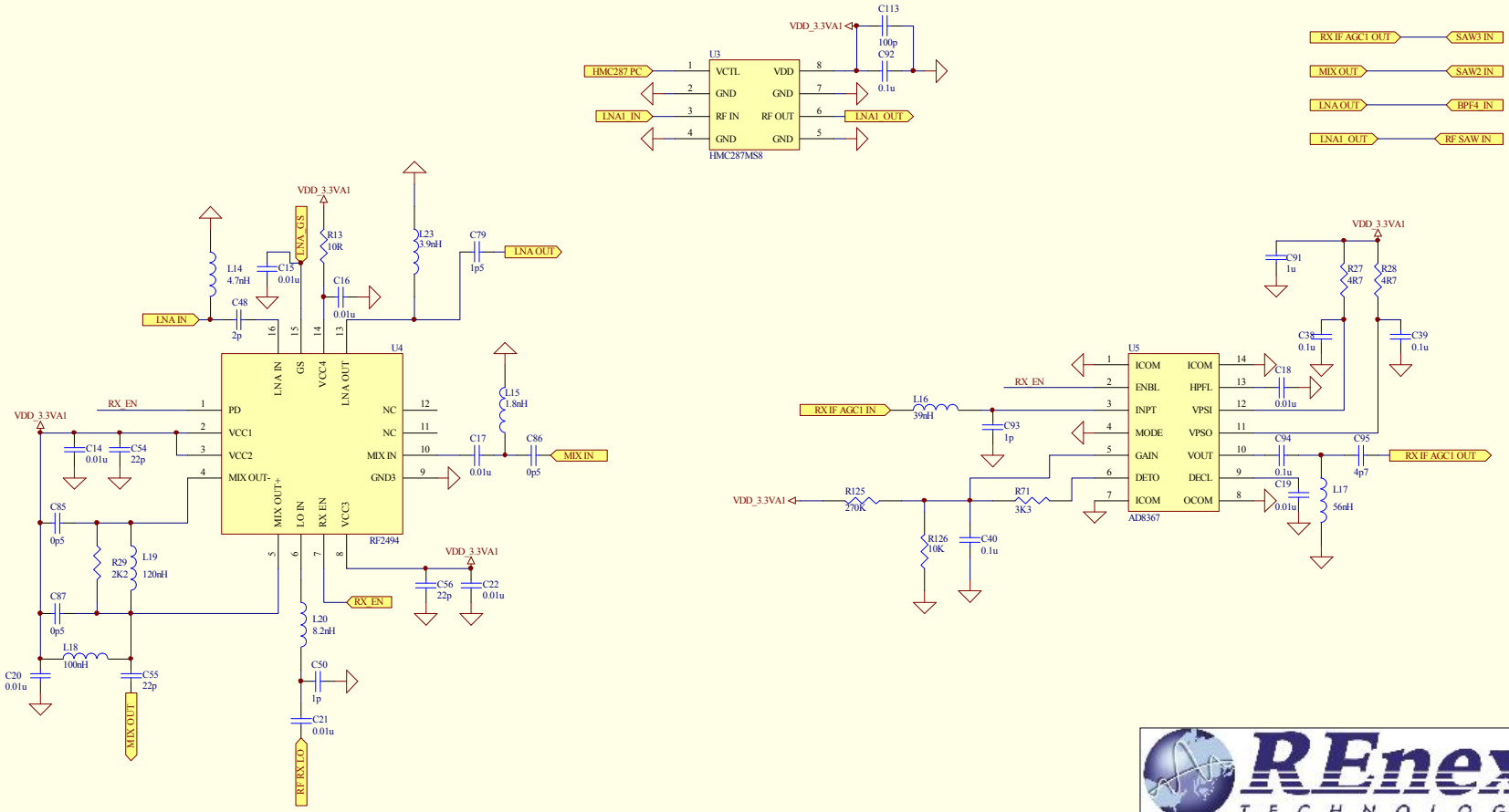

REnex TECHNOLOGY

Confidential

Copyright (C) 2001-2002 REnex Technology Limited. All rights reserved. No part of this document may be reproduced or utilized in any form or by any means, electronic or mechanical, including photocopying and microfilm, without permission in writing from REnex Technology Limited.

Organization: REnex Technology Limited		
Title: Downlink		
File: DOWNLINK.sch		
Revision: WM0144	Date:4-May-2004	Sheet 8 of 12
Designed by: Yiguang MA & Kui LU		

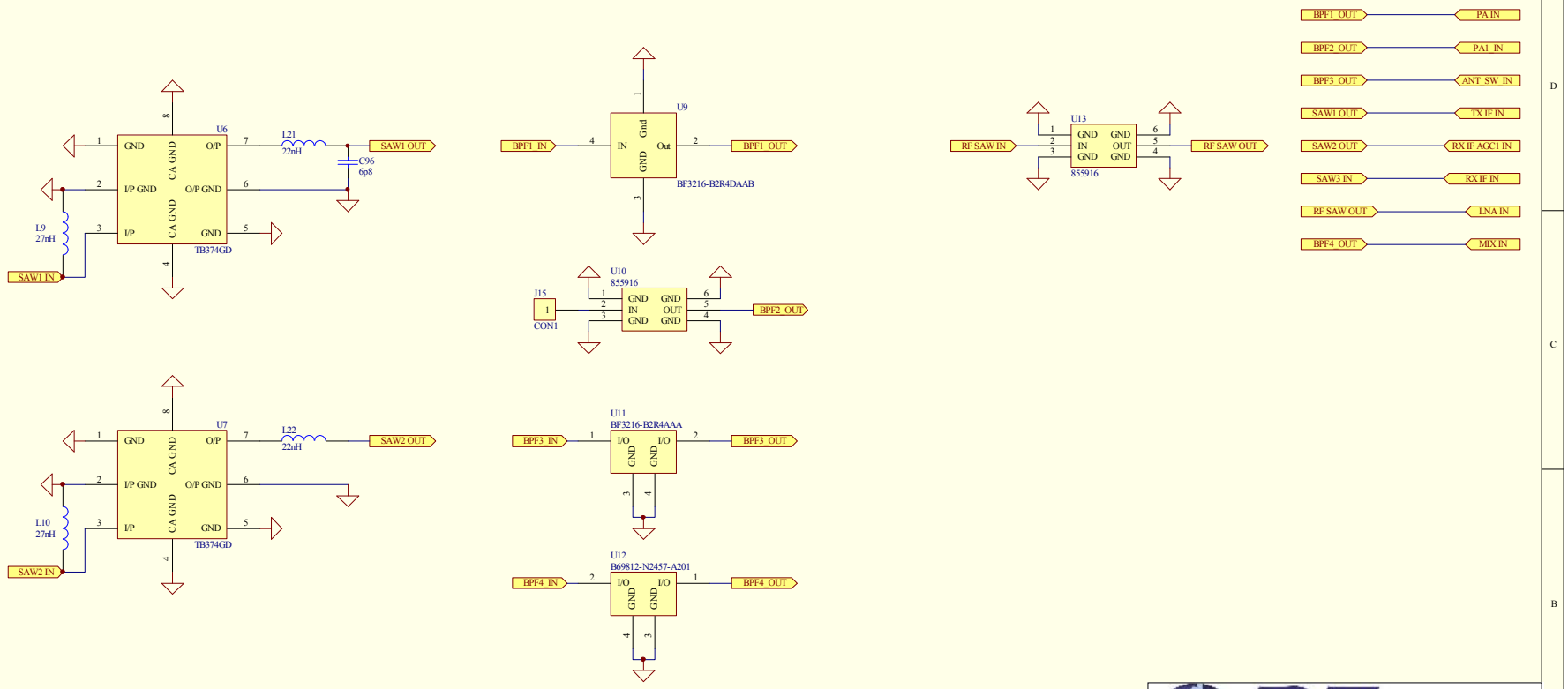

REnex TECHNOLOGY

Confidential

Copyright (C) 2001-2002 REnex Technology Limited. All rights reserved. No part of this document may be reproduced or utilized in any form or by any means, electronic or mechanical, including photocopying and microfilm, without permission in writing from REnex Technology Limited.

Organization: REnex Technology Limited		
Title: Filters		
File: Filters.sch		
Revision: WM0144	Date:4-May-2004	Sheet 9 of 12
Designed by: Yiguang MA & Kui LU		

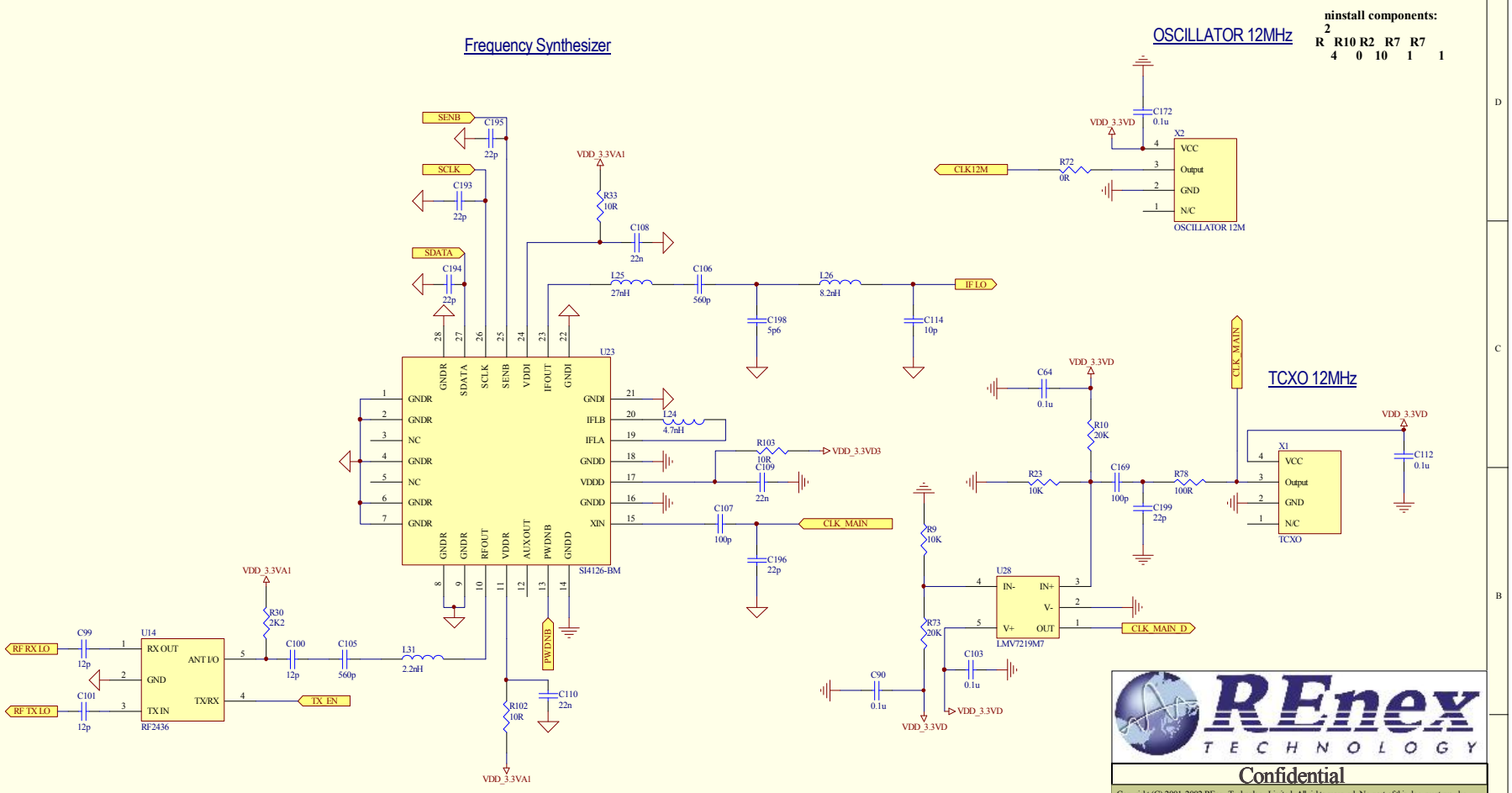

Confidential
Copyright (C) 2001-2002 REnex Technology Limited. All rights reserved. No part of this document may be reproduced or utilized in any form or by any means, electronic or mechanical, including photocopying and microfilm, without permission in writing from REnex Technology Limited.

Organization: REnex Technology Limited
Title: Fre uency Synthesizer & Despreader
File: Synthesizer & TCXO.sch
Revision: WM0144 | Date:4-May-2004 | Sheet 10 of 12
Designed by:Yiguang MA & Kui LU

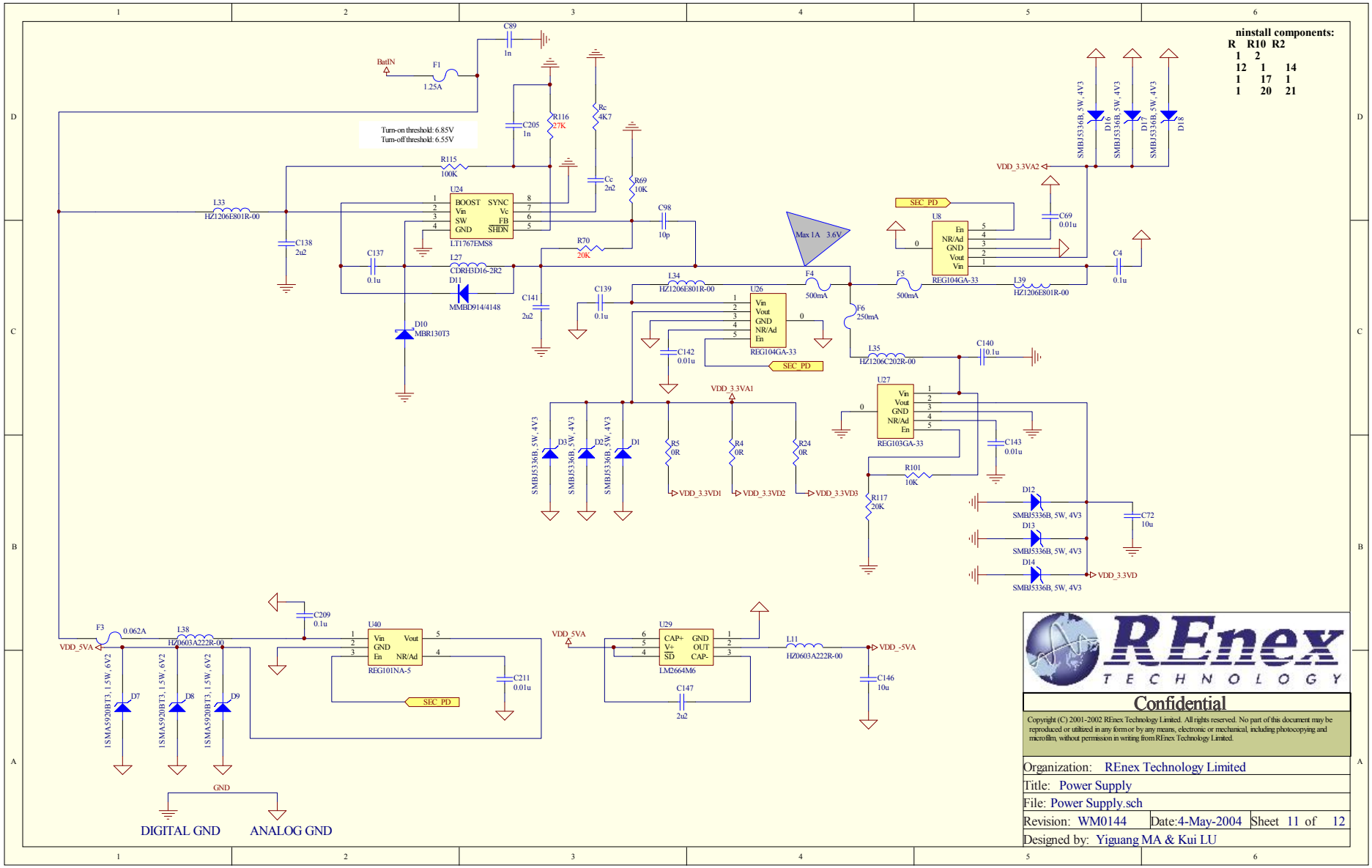

REnex TECHNOLOGY

Confidential

Copyright (C) 2001-2002 REnex Technology Limited. All rights reserved. No part of this document may be reproduced or utilized in any form or by any means, electronic or mechanical, including photocopying and microfilm, without permission in writing from REnex Technology Limited.

Organization: REnex Technology Limited

Title: Power Supply

File: Power Supply.sch

Revision: WM0144 | Date:4-May-2004 | Sheet 11 of 12

Designed by: Yiguang MA & Kui LU

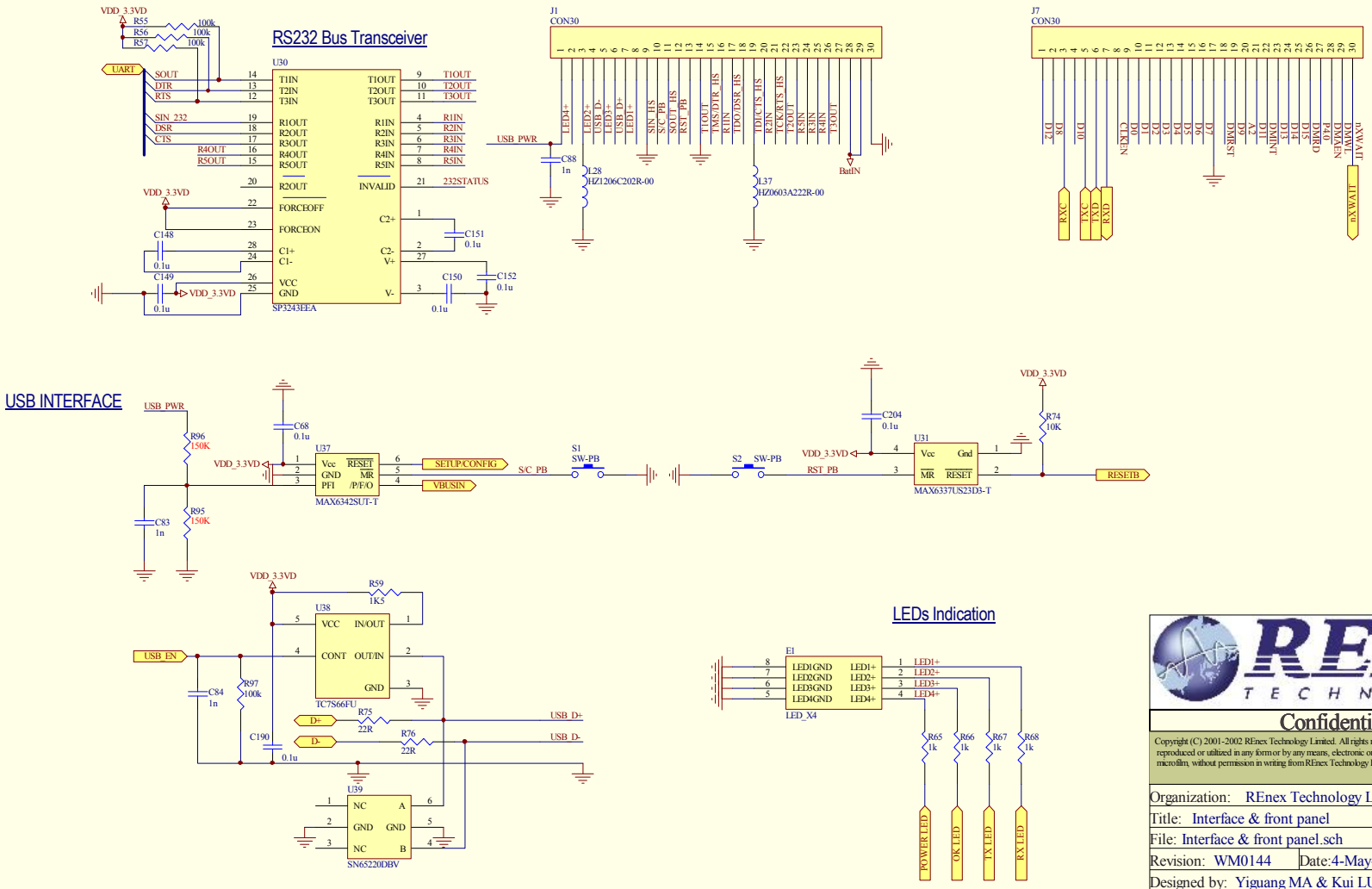

REnex TECHNOLOGY

Confidential

Copyright (C) 2001-2002 REnex Technology Limited. All rights reserved. No part of this document may be reproduced or utilized in any form or by any means, electronic or mechanical, including photocopying and microfilm, without permission in writing from REnex Technology Limited.

Organization: REnex Technology Limited		
Title: Interface & front panel		
File: Interface & front panel.sch		
Revision: WM0144	Date:4-May-2004	Sheet 12 of 12
Designed by: Yiguang MA & Kui LU		