User’s Manual

1. Product Introduction

- Super slim & light mobile storage device using 2.5” HDD
- Supporting both USB2.0 and IEEE1394 with lightning speed
- One touch assembly without screws
- Blue LED for operation indicator
- No external power required
- Plug & Play and Hot Plugging
- Scheduling auto back-up software
- Aluminum for heat management & deluxe case

2. Specification

Interface		USB 2.0	USB 2.0 + IEEE 1394
Model		SPIO 252	SPIO 255
Transfer Rate		480Mbps	480Mbps / 400Mbps
Hard Disk		2.5”, 9.5mm IDE Hard Disk	
Domension		128 x 75 x 145 (D x W x H)	
Weight		180g (HDD included)	
Power Source		Bus Power	
OS	Windows	98 / 98SE / ME / 2000 / XP (IEEE1394 is supported from Win98SE)	
	Mac	OS 8.6 Higher	
Contents		SPIO, Cable, Driver & Auto backup Software CD, Manual, Leather Bag	

3. System Environment

[Windows PC]

- USB 2.0 / 1.1
  - System : Pentium or higher IBM compatible PC or Mac
  - Memory : Over 32MB
  - OS : Windows 98 / ME / 2000 / XP, Mac OS 8.6 & higher
  - Interface : USB2.0 / 1.1 port
    (For USB2.0 support, USB2.0 based main board or USB 2.0 PCI card, or PCMCIA cards are required)
  - CD Drive for driver installation or internet connection for download of installation driver

- IEEE 1394
  - System : Pentium or higher IBM compatible PC or Mac
  - Memory : Over 32MB

- OS : Windows 98 / ME / 2000 / XP, Mac OS 8.6 & higher (IEEE1394 is not available under Win98)
- Interface : IEEE1394 port

  (If the port is not exist in the PC, IEEE1394 PCI card, or PCMCIA cards are required)
- CD Drive for driver installation or internet connection for download of installation driver

[Macintosh]

- USB 2.0/1.1
  - System : PC that has USB port
  - Memory : Over 32MB
  - OS : Mac OS 8.6 & higher
  - CD Drive for driver installation or internet connection for download of installation driver

- IEEE 1394
  - System : iMAC, G3 higher (PC that has IEEE1394 port)
  - Memory : Over 32MB
  - OS: Mac OS 8.6 & higher
  - CD Drive for driver installation or internet connection for download of installation driver

4. Caution

- **New hard disk requires FDISK and Formatting**. SPIO can't be detected in the computer without this process.
- Do not drop or aggressively handle the SPIO. It may cause damage to the hard disk.
- Avoid exposing the SPIO to the magnetic like a speaker and humidity. It may cause damage to the hard disk..
- Do not remove or disconnect the SPIO from PC while the SPIO is transferring the data. It may cause damage to hard disk.

  <On the data loss resulted from ignoring above notes, Valueplus Inc. is not responsible for it.>

5. Name of each part

6. Hardware Installation

1) Please disassembly “SPIO” to insert Hard disk drive.

Top Case Disassembly

Step 1. Push the button.

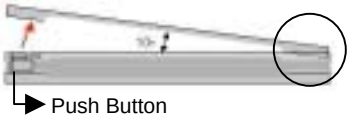

Step 2. Slide the cover to the arrow direction.

*** Warning. Do not lift up the top case over around 10 degrees.**
(Hook of aluminum cover in circle area can be broken due to excessive lift

Bottom Case Disassembly

Step 1. Push the button.

Step 2. Slide the cover to the arrow direction.

2) Assemble HDD into the mid-frame.

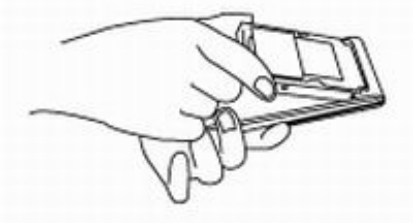

Step 1. Insert the Hard disk into HDD connector.
Step 2. Put the board in the plastic mid-frame.

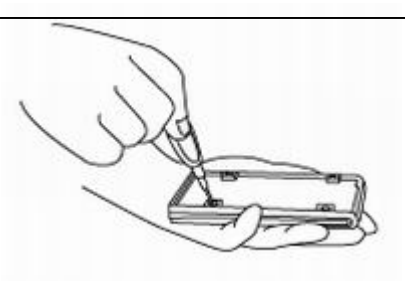

Step 3. Screw and fix the HDD with mid-frame.

3) Assembly “SPIO”

Bottom Case Assembly

Step 1. Slide the cover to the arrow direction.
Insert the hook of cover into the hole of mid frame.

Step 2. Lock the case on a mid frame.

Top Case Assembly

Step 1. Slide the cover to the arrow direction.
Insert the hook of cover into the hole of mid frame.

Step 2. Lock the case on a mid frame.

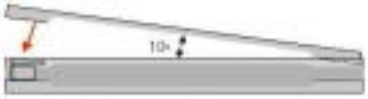

7. Installation Guide

- USB

(1) USB mode: Select the switch to “USB”(Left)

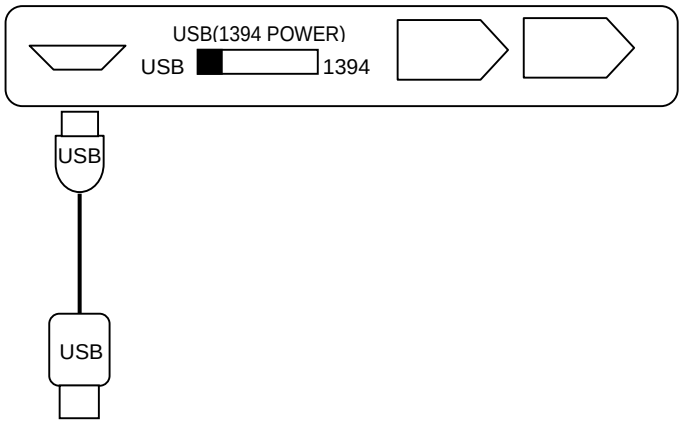

(2) When the power is not enough from one USB port, please use USB DC Jack shown as below picture. USB DC Jack will provide extra power from another USB port. Switch should be “USB”(Left).

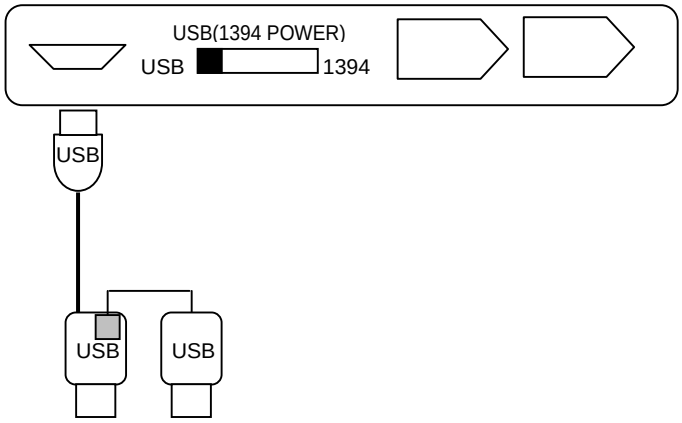

- IEEE 1394

(1) 6pin to 6pin: Select the switch to “1394”(Right)

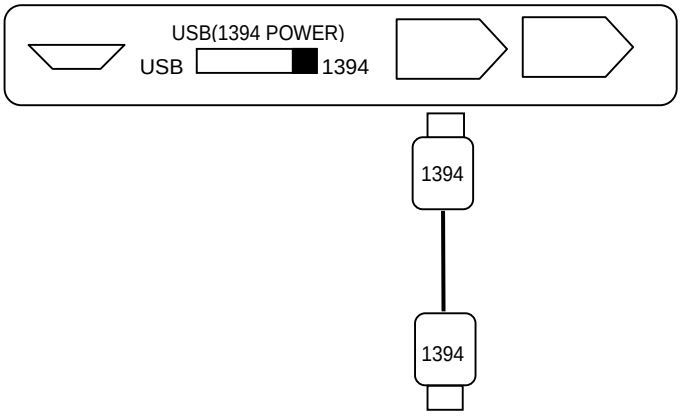

(2) When the power is not enough from 6pin port, power can be provided from the USB port.
Select the switch to “USB(1394 POWER)”(Middle)

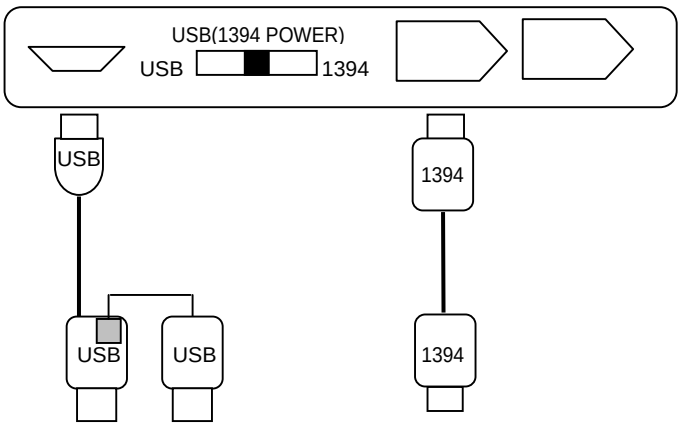

(3) 6pin to 4pin: Power should be provided from the USB port.
Select the switch to “USB(1394 POWER)”(Middle)

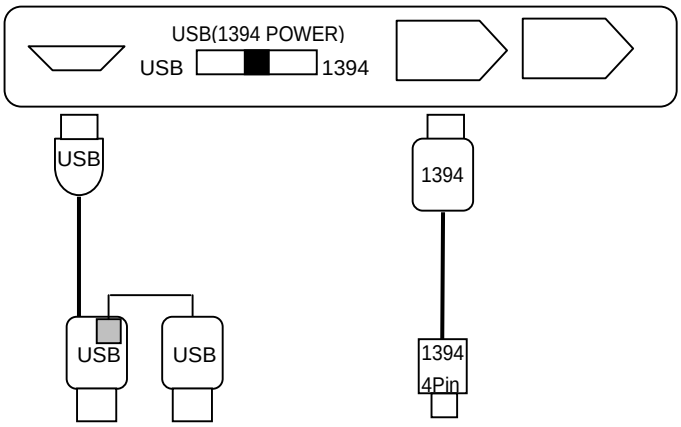

8. Driver Installation

- **USB**

<Installation under Windows 98/ 98SE >

1) After connecting the SPIO to your computer, the Plug & play function will detect the SPIO.
2) When 'Add New Hardware Wizard' is shown, follow the installation process as below picture.

(1)

(2)

(3)

Add New Hardware Wizard
Windows will search for new drivers in its driver database on your hard drive, and in any of the following selected locations. Click Next to start the search.
Floppy disk drives
CD-ROM drive
Microsoft Windows Update
Specify a location:
E:\Drivers
Browse...
< Back
Next >
Cancel

(4)

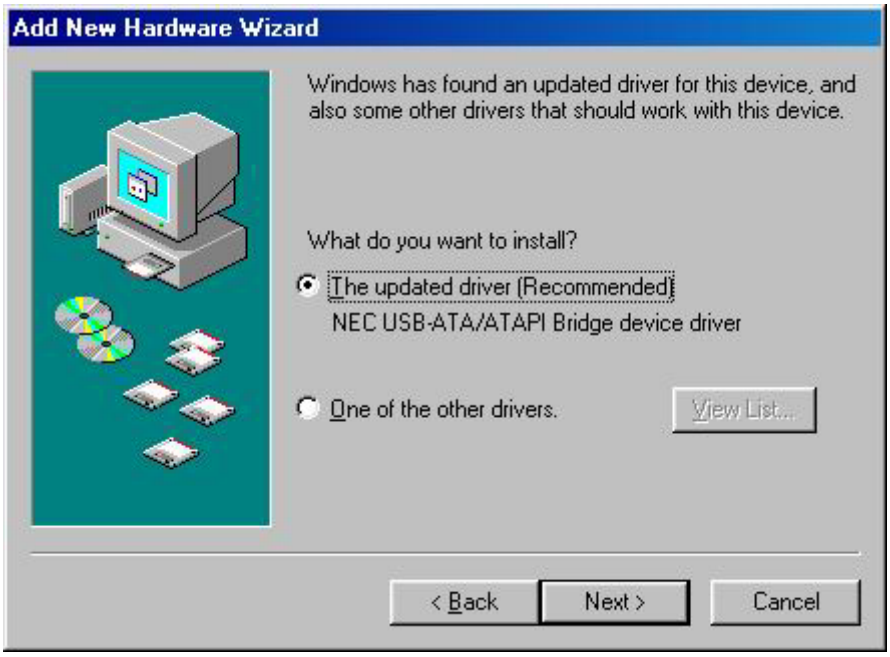
Add New Hardware Wizard
Windows has found an updated driver for this device, and also some other drivers that should work with this device.
What do you want to install?
The updated driver (Recommended)
NEC USB-ATA/ATAPI Bridge device driver
One of the other drivers.
View List...
< Back
Next >
Cancel

(5)

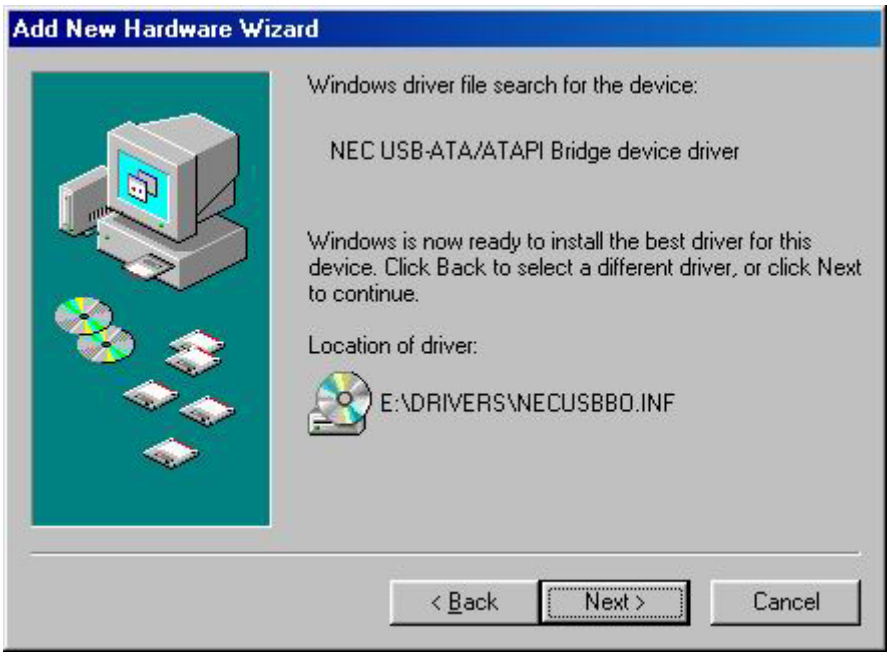
Add New Hardware Wizard
Windows driver file search for the device:
NEC USB-ATA/ATAPI Bridge device driver
Windows is now ready to install the best driver for this device. Click Back to select a different driver, or click Next to continue.
Location of driver:
E:\DRIVERS\NECUSBBO.INF
< Back
Next >
Cancel

(6)

* After USB driver is installed completely, start installing IEEE1394 driver.

(7)

(8)

(9)

Add New Hardware Wizard
Windows will search for new drivers in its driver database on your hard drive, and in any of the following selected locations. Click Next to start the search.
Floppy disk drives
CD-ROM drive
Microsoft Windows Update
Specify a location:
E:\Drivers
Browse...
< Back
Next >
Cancel

(10)

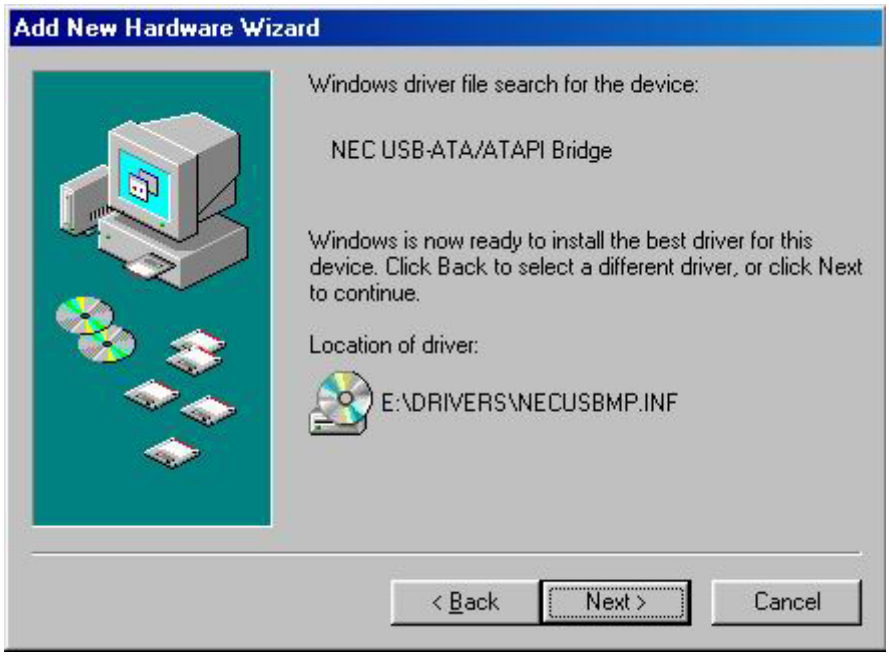
Add New Hardware Wizard
Windows driver file search for the device:
NEC USB-ATA/ATAPI Bridge
Windows is now ready to install the best driver for this device. Click Back to select a different driver, or click Next to continue.
Location of driver:
E:\DRIVERS\NECUSBMP.INF
< Back
Next >
Cancel

(11)

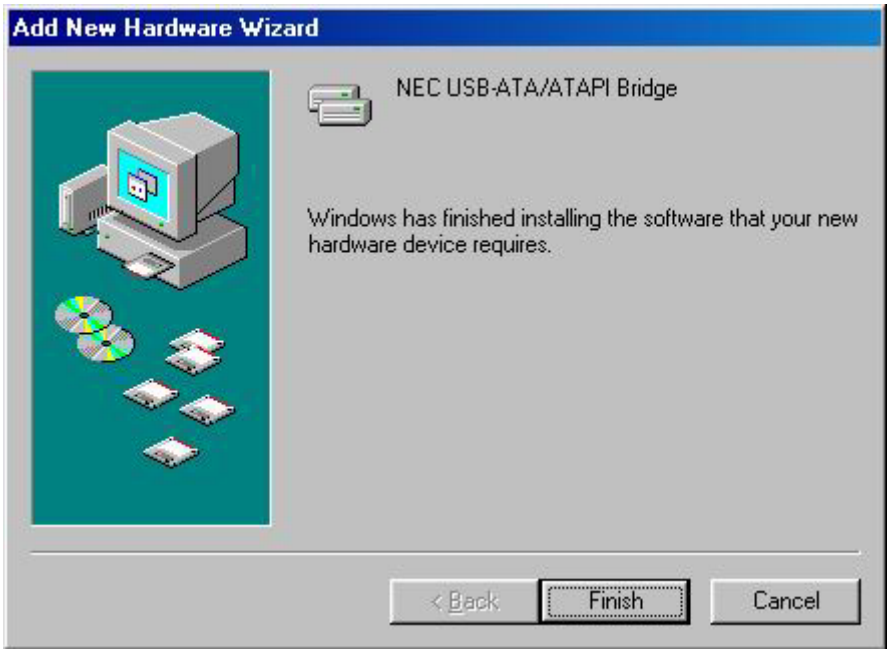
Add New Hardware Wizard
NEC USB-ATA/ATAPI Bridge
Windows has finished installing the software that your new hardware device requires.
< Back
Finish
Cancel

< Driver Installation under Windows ME / 2000 / XP >

SPIO is automatically detected without driver installation under Windows ME, 2000, XP.

< Driver Installation under Mac OS 8.x ~ 9.x >

SPIO is automatically detected without driver installation under Mac OS 8.6 higher.

- **IEEE 1394**

< Driver Installation under Windows 98 SE >

Driver installation is not required at Windows98SE. However, sometimes when you use at the Windows98 SE system, you can get the message “Insert Windows CD”. Please insert Windows 98SE CD in CD-Rom. Required driver will be installed automatically.

*** Windosw 98 does not support IEEE1394 interface.**

< Driver Installation under Windows ME / 2000 / XP >

SPIO is automatically detected without driver installation under Windows ME, 2000, XP.

< Driver Installation under Mac OS 8.6 ~ 9.0 >

Please down load “Firewire enabler” at Macintosh Homepage (http://www.apple.com) and install it. SPIO will be detected after rebooting the system.

< Driver Installation under Mac OS 9.0 higher >

SPIO is automatically detected without driver installation under Mac OS 9.0 higher.

9. Safe way to remove SPIO

- Windows

1) Finish all operation of SPIO before removing. Click the left button of mouse on the USB icon in the system tray, and select the message “Stop – [DiskDrive]HDD Model name”.

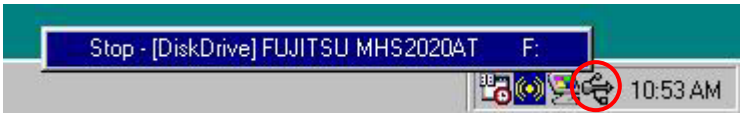

2) When you get the pop up message “You can unplug the USB storage device as safely”, click “OK”. SPIO can be removed safely.

- Mac

Drag & Drop the SPIO icon to the trash icon on Desktop.

10. HardCopy(Auto Backup Program) Installation

Insert the program into CD-ROM Drive. There is a directory of [Hardcopy]. Double click on the "Hardcopy.exe" icon.

Click OK to install the Hardcopy under the default directory. Don't need to restart your computer. You are ready to use Hardcopy.

You can find Hardcopy icon on the desktop

To back up the data for the first time

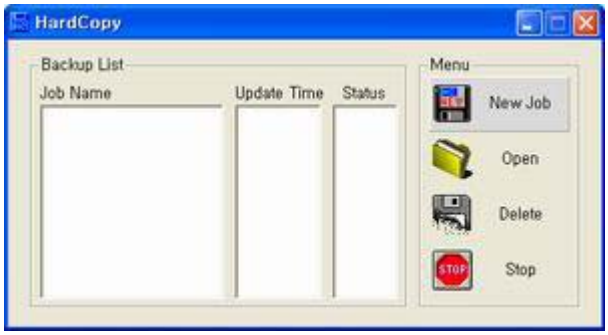

1. Backup List: List Job name, update time, and status.

(A) Status

* "Start" – Start copy.
* "Enable" – Active state. Regular backup will be done with specified period
* "Disable" – Inactive state. No more regular backup activity.
* "Copy" – Under backup processing.

(B) To change the active status, click "the name of status".

2. Menu: [New Job- Make a new job] [Open- open the activated job] [Delete- remove the job] [Stop- disable the job]

Option for backup operation

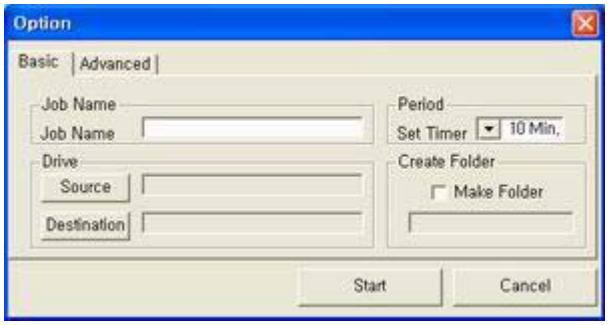

3. Basic: You can see the left window after select New Job or Open.

(A) Job name: Make a new job name.

(B) Period: Set up the regular backup schedule (default is 10min.)

(C) Drive: Select the object folder and backup destination.

(D) Create folder: Make a new backup folder name.

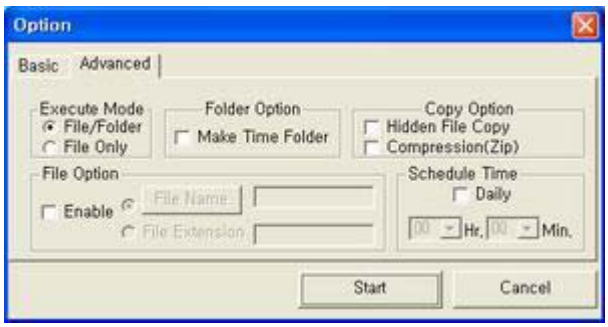

4. Advanced:

(A) Execute

a. File/Folder: backup file and folder.

b. File: backup only file.

(B) Folder option: Separate backup time folder is created for each task.

(C) Copy option: Can backup hidden file, or backup with file compression.

(D) File option: You can backup specific file with selection of file name and file extension.

(E) Schedule Time: IF you have chosen a daily schedule, you can specify an exact time of the day when it runs. After this schedule time setting, previous general period setting is disregarded.

- You can change the property of job after open the specific job.

FCC Compliance Statement

Caution: Any changes or modification in construction of this device which are not expressly approved by the party responsible for compliance could void the user's authority to operate the equipment.

Note: This equipment has been tested and found to comply with the limits for a Class B digital device, pursuant to part 15 of the FCC Rules. These limits are designed to provide reasonable protection against harmful interference in a residential installation. This equipment generates, uses and can radiate radio frequency energy and, if not installed and used in accordance with the instructions, may cause harmful interference to radio communications. However, there is no guarantee that interference will not occur in a particular installation. If this equipment does cause harmful interference to radio or television reception, which can be determined by turning the equipment off and on, the user is encouraged to try to correct the interference by one or more of the following measures:

- Reorient or relocate the receiving antenna
- Increase the separation between the equipment and receiver.
- Connect the equipment into an outlet on a circuit different from that to which the receiver is connected.
- Consult the dealer or an experienced radio/TV technician for help.

Warranty

- Limited Warranty

  Valueplus warrants that the product enclosed to be free of defects for a period of 1-year from the date of purchase. In the event of a defect in material or workmanship during the warranty period, Valueplus, at its discretion, will repair or replace the defective product when the defectively product is returned to Valueplus by the owner/authorized seller.

  The remedy for this breach of warranty is limited to servicing or replacement only and should not cover any other damages, including but not limited to the loss of profit, special, incidental, consequential, and other similar claims.

  If the product is found to be defective, Valueplus at its option, agrees to replace or repair the product without extra charge except as stated below, provided that you can show dated proof of purchase. If you ship the product back to Valueplus, you must assume the risk of damage or loss in transit. You must use the original container (or equivalent) and pay the shipping charge.

  Valueplus may replace or repair the product with new or reconditioned parts, and the replaced parts or product become the property of Valueplus. In case of the failure caused by careless mistakes and the natural disaster such as fire, flood, earthquake, and damage from water, it'll be charged.

- Warranty registration

Product		Model	
Serial No.		Date of purchasing	Date Month year
Place of purchasing		Phone	
Customer		Phone	
Customer address			

- In case of failure, please contact your local retail shop or customer service center.

Valueplus, Inc.

TEL : 82-31-717-5880 FAX : 82-31-717-5988

E-mail : vp@valueplus.co.kr, http://www.valueplus.co.kr