Certificate#4897.01

TEST REPORT

REPORT NUMBER: I23W00045-SAR

ON

Type of Equipment:	4G Smart Phone
Type of Designation:	MobiWire H6322, Altice S35
Brand Name:	MobiWire, Altice
Manufacturer:	MobiWire SAS
FCC ID:	QPN-H6322

ACCORDING TO

IEEE C95.1-2019

IEC/IEEE 62209-1528-2020

Chongqing Academy of Information and Communication Technology

Month date, year

Sep. 20, 2023

Signature

Xiang Luoyong

Director

Note:

The test results in this test report relate only to the devices specified in this report. This report shall not be reproduced except in full without the written approval of Chongqing Academy of Information and Communications Technology.

Revision Version

Chongqing Academy of Information and Communication Technology

Address: No. 8,Yuma Road, Chayuan New City, Nan'an District, Chongqing, P. R. China,401336

Tel: 0086-23-88069965 FAX:0086-23-88608777

Report Number	Revision	Date	Memo
I23W00045-SAR	00	2023-09-20	Initial creation of test report

TABLE OF CONTENT

1.TEST LABORATORY 5
1.1 TESTING LOCATION 5
1.2 TESTING ENVIRONMENT 5
1.3 PROJECT DATA 5
1.4 SIGNATURE 5
2. STATEMENT OF COMPLIANCE 6
3.CLIENT INFORMATION 7
3.1 APPLICANT INFORMATION 7
3.2 MANUFACTURER INFORMATION 7
4. EQUIPMENT UNDER TEST (EUT) AND ANCILLARY EQUIPMENT (AE) 8
4.1 ABOUT EUT 8
4.2 INTERNAL IDENTIFICATION OF EUT USED DURING THE TEST 9
4.3 INTERNAL IDENTIFICATION OF AE USED DURING THE TEST 9
4.4 CONFIGURATION DIFFERENCES 9
5.REFERENCE DOCUMENTS 10
5.1 APPLICABLE LIMIT REGULATIONS 10
5.2 APPLICABLE MEASUREMENT STANDARDS 10
6.SPECIFIC ABSORPTION RATE (SAR) 11
6.1 INTRODUCTION 11
6.2 SAR DEFINITION 11
7.SAR MEASUREMENT SETUP 12
7.1 MEASUREMENT SET-UP 12
7.2 DASY5 E-FIELD PROBE SYSTEM 13
7.3 E-FIELD PROBE CALIBRATION 14
7.4 OTHER TEST EQUIPMENT 15
8.POSITION OF THE WIRELESS DEVICE IN RELATION TO THE PHANTOM 19
8.1 GENERAL CONSIDERATIONS 19
8.2 BODY-WORN DEVICE 20
8.3 DESKTOP DEVICE 21
8.4 DUT SETUP PHOTO 22
9.TISSUE SIMULATING LIQUIDS 23
9.1 EQUIVALENT TISSUES 23
9.2 DIELECTRIC PERFORMANCE 25
10.SYSTEM VALIDATION 26
10.1 SYSTEM VALIDATION 26
10.2 SYSTEM SETUP 26
11. MEASUREMENT PROCEDURES 28
11.1 TESTS TO BE PERFORMED 28
11.2 MEASUREMENT PROCEDURE 30
11.3 SAR MEASUREMENT FOR GSM 31
11.4 SAR MEASUREMENT FOR WCDMA 31
11.5 SAR MEASUREMENT FOR LTE 32

11.6 SAR MEASUREMENT FOR BLUETOOTH & WI-FI 34
11.7 POWER DRIFT 34

12.AREA SCAN BASED 1-G SAR 35

12.1 REQUIREMENT OF KDB 35
12.2 FAST SAR ALGORITHMS 35

13.CONDUCTED OUTPUT POWER 36

13.1 POWER REDUCTION PROCEDURES 36
13.2 CONDUCTED OUTPUT POWER 38

14.SIMULTANEOUS TX SAR CONSIDERATIONS 64

14.1 INTRODUCTION 64
14.2 TRANSMIT ANTENNA POSITION 64
14.3 SIMULTANEOUS TRANSMISSION FOR EUT 65

15.SAR TEST RESULT 66

15.1 SAR RESULT 66
15.2. SAR MEASUREMENT VARIABILITY 79

16. MEASUREMENT UNCERTAINTY 80

17. MAIN TEST INSTRUMENTS 84

ANNEX A. GRAPH RESULTS 85

ANNEX B. SYSTEM VALIDATION RESULTS 105

ANNEX C. CALIBRATION REPORT 114

ANNEX D. ACCREDITATION CERTIFICATE 176

1.Test Laboratory

1.1 Testing Location

Company Name:	Chongqing Academy of Information and Communications Technology
Designation Number:	CN1239
Address:	No. 8,Yuma Road, Chayuan New City, Nan'an District, Chongqing, P. R. China
Postal Code:	401336
Telephone:	0086-23-88069965/021-68866880
Fax:	0086-23-88608777

1.2 Testing Environment

Normal Temperature:	18℃-25℃
Relative Humidity:	30%-70%
Ambient noise & Reflection:	< 0.012 W/kg

1.3 Project Data

Testing Start Date:	2023-08-25
Testing End Date:	2023-09-14

1.4 Signature

胡波	**2023-09-20**
Hu Bo **(Prepared this test report)**	**Date**
喻春	**2023-09-20**
Yu Chun **(Reviewed this test report)**	**Date**
向罗勇	**2023-09-20**
Xiang Luoyong **Director of the laboratory** **(Approved this test report)**	**Date**

2. Statement of Compliance

The maximum results of Specific Absorption Rate (SAR) found during testing for **MobiWire H6322, Altice S35** are as follow:

Table 2.1: Highest Reported SAR (1g, W/kg)

Technology Band	Head(0mm)	Hotspot (10mm)	Body-worn(10mm)
GSM850	1.031	0.243	0.243
GSM1900	0.087	0.884	0.884
WCDMA Band Ⅱ	0.143	0.999	0.936
WCDMA Band Ⅴ	1.030	0.413	0.365
LTE Band 2	0.127	0.789	0.767
LTE Band 4	0.286	1.175	1.175
LTE Band 5	1.017	0.437	0.352
LTE Band 7	0.509	1.060	0.708
LTE Band 41	0.188	0.912	0.798
Wi-Fi 2.4G	0.561	0.122	0.119
Wi-Fi 5G	0.460	0.134	0.129
BT	0.101	0.027	0.025

Remark: The SAR values found for the tracker are below the maximum recommended levels of 1.6 W/kg as averaged over any 1g tissue according to the IEEE C95.1-2019.

For body operation, this device has been tested and meets FCC RF exposure guidelines when used with any accessory that contains no metal and which provides a minimum separation distance of 10 mm between this device and the body of the user. Use of other accessories may not ensure compliance with FCC RF exposure guidelines.

The EUT battery must be fully charged and checked periodically during the test to ascertain uniform power output.

The measurement together with the test system set-up is described in Chapter 7 of this test report.

A detailed description of the equipment under test can be found in Chapter 4 of this test report.

This project is a variant project based on the original report I23W00020-SAR. According to the product change description, we fully tested GSM/WCDMA/LTE bands and tested the worst mode of Wi-Fi Bands.

This project has two sets of configured sample S1/S2(Main supply) and S3(Secondary supply), among which the S1/S2 sample is the main test, and the S3 sample tests the worst mode of SAR. See Section 4.4 for configuration differences.

The maximum SAR value is obtained at the case of **Table 2.1**, and the values are**:**

Head: 1.031 W/kg (1g), Body-worn: 1.175 W/kg (1g), Hotspot: 1.175 W/kg (1g).

3.Client Information

3.1 Applicant Information

Company Name:	MobiWire SAS
Address /Post:	107 Boulevard de la Mission Marchand 92400 Courbevoie,France
Telephone:	+33625028368
Fax:	--
Email:	olivier.tiennault@mobiwire.com
Contact Person:	Olivier Tiennault

3.2 Manufacturer Information

Company Name:	MobiWire SAS
Address /Post:	107 Boulevard de la Mission Marchand 92400 Courbevoie,France
Telephone:	+33625028368
Fax:	--
Email:	olivier.tiennault@mobiwire.com
Contact Person:	Olivier Tiennault

4. Equipment Under Test (EUT) and Ancillary Equipment (AE)

4.1 About EUT

Description:	4G Smart Phone
Model name:	MobiWire H6322, Altice S35
Operating mode(s):	GSM900/GSM1800/GSM850/GSM1900 WCDMA Band Ⅰ/Ⅱ/Ⅴ/Ⅷ LTE Band 1/2/3/4/5/7/8/20/28/38/41 Wi-Fi 2.4G,Wi-Fi 5G U-NII-1/2A/2C/3,BT/BLE
Tested Tx Frequency:	824-849 MHz (GSM850)
	1850-1910 MHz (GSM1900)
	1850-1910 MHz (WCDMA BandⅡ)
	824-849 MHz (WCDMA Band V)
	1850-1910 MHz (LTE Band 2)
	1710-1755 MHz (LTE Band 4)
	824-849 MHz (LTE Band 5)
	2500-2570 MHz (LTE Band 7)
	2570-2620 MHz (LTE Band 38)
	2496-2690 MHz (LTE Band 41)
	2412-2462 MHz (Wi-Fi 2.4G)
	5180-5240 MHz (Wi-Fi 5G U-NII-1)
	5260-5320 MHz (Wi-Fi 5G U-NII-2A)
	5500-5720 MHz (Wi-Fi 5G U-NII-2C)
	5745-5825 MHz (Wi-Fi 5G U-NII-3)
	2402-2480 MHz (BT)
Device type:	Portable device
Antenna type:	PIFA(internal) antenna
Hotspot mode:	Support

4.2 Internal Identification of EUT used during the test

EUT ID*	SN or IMEI	HW Version	SW Version	Date of receipt
S1	IMEI 1: 354365420300567 IMEI 2: 354365420300575	V01	Mobiwire_H6322_V01	2023-08-15
S2	IMEI 1: 354365420300542 IMEI 2: 354365420300559	V01	Mobiwire_H6322_V01	2023-08-15
S3	IMEI 1: 354365420300286 IMEI 2: 354365420300294	V01	Mobiwire_H6322_V01	2023-08-15

*EUT ID: is used to identify the test sample in the lab internally.

4.3 Internal Identification of AE used during the test

AE ID*	Description	Model	SN	Manufacturer
B1	Battery	SA-LI-040385A-N01	27495H3022200261	Shenzhen Aerospace Electronic CO.,Ltd.
A1	Headset	JWEP1199-M01H	N/A	Juwei Electronics Co.,Ltd.

*AE ID: is used to identify the test sample in the lab internally.

4.4 Configuration Differences

Difference	Config 1: S1/S2(Main supply)	Config 2: S3(Secondary supply)
CPU	MT8766V	MT6761V
Memory-ROM	HSEMSDS6S2B32G	KSI EMMC32G-PJ30
Memory-RAM	CXDB4ABAM-MK	micron FLXC2002G-N2
G-sensor	slan SC7A20ETR	sensortek STK8BA58
P-sensor	MN78912	Liteon LTR-569ALS-02

5.Reference Documents

5.1 Applicable Limit Regulations

IEEE C95.1: 2019 IEEE Standard for Safety Levels with Respect to Human Exposure to Electric, Magnetic, and Electromagnetic Fields, 0 Hz to 300 GHz.

It specifies the maximum exposure limit of **1.6 W/kg** as averaged over any 1 gram of tissue for portable devices being used within 20 cm of the user in the uncontrolled environment.

5.2 Applicable Measurement Standards

IEC/IEEE 62209-1528-2020： Measurement procedure for the assessment of specific absorption rate of human exposure to radio frequency fields from hand-held and body-mounted wireless communication devices – Part 1528: Human models, instrumentation, and procedures (Frequency range of 4 MHz to 10 GHz)

KDB447498 D01: General RF Exposure Guidance v06: Mobile and Portable Devices RF Exposure Procedures and Equipment Authorization Policies.

KDB941225 D05 SAR for LTE Devices v02r05: SAR Evaluation Considerations for LTE Devices.

KDB 941225 D01 3G SAR Procedures v03r01: 3G SAR Meaurement Procedures.

KDB 941225 D06 Hot Spot SAR v02r01: SAR Evaluation Procedures For Portable Devices With Wireless Router Capabilities.

KDB 248227 D01 802.11 Wi-Fi SAR v02r02: SAR Guidance for IEEE 802.11(Wi-Fi) Transmitters.

KDB 648474 D04, Handset SAR v01r03: SAR Evaluation Considerations For Wireless Handsets.

KDB865664 D01 SAR measurement 100 MHz to 6 GHz v01r04: SAR Measurement Requirements for 100 MHz to 6 GHz.

KDB865664 D02 RF Exposure Reporting v01r02: RF Exposure Compliance Reporting and Documentation Considerations.

6.Specific Absorption Rate (SAR)

6.1 Introduction

SAR is related to the rate at which energy is absorbed per unit mass in an object exposed to a radio field. The SAR distribution in a biological body is complicated and is usually carried out by experimental techniques or numerical modeling. The standard recommends limits for two tiers of groups, occupational/controlled and general population/uncontrolled, based on a person's awareness and abilityto exercise control over his or her exposure.In general, occupational/controlled exposure limits are higher than the limits for general population/uncontrolled.

6.2 SAR Definition

The SAR definition is the time derivative (rate) of the incremental energy (dW) absorbed by (dissipated in) an incremental mass (dm) contained in a volume element (dv) of a given density (ρ) . The equation description is as below:

$$SAR = \frac{d}{dt}\left(\frac{dW}{dm}\right) = \frac{d}{dt}\left(\frac{dW}{\rho dv}\right)$$

SAR is expressed in units of Watts per kilogram (W/kg)
SAR measurement can be either related to the temperature elevation in tissue by

$$SAR = c\left(\frac{\delta T}{\delta t}\right)$$

Where: C is the specific head capacity, δT is the temperature rise and δt is the exposure duration, or related to the electrical field in the tissue by

$$SAR = \frac{\sigma |E|^2}{\rho}$$

Where: σ is the conductivity of the tissue, ρ is the mass density of tissue and E is the RMS electrical field strength.

However for evaluating SAR of low power transmitter, electrical field measurement is typically applied.

7.SAR MEASUREMENT SETUP

7.1 Measurement Set-up

The DASY5 system for performing compliance tests is illustrated above graphically. This system consists of the following items:

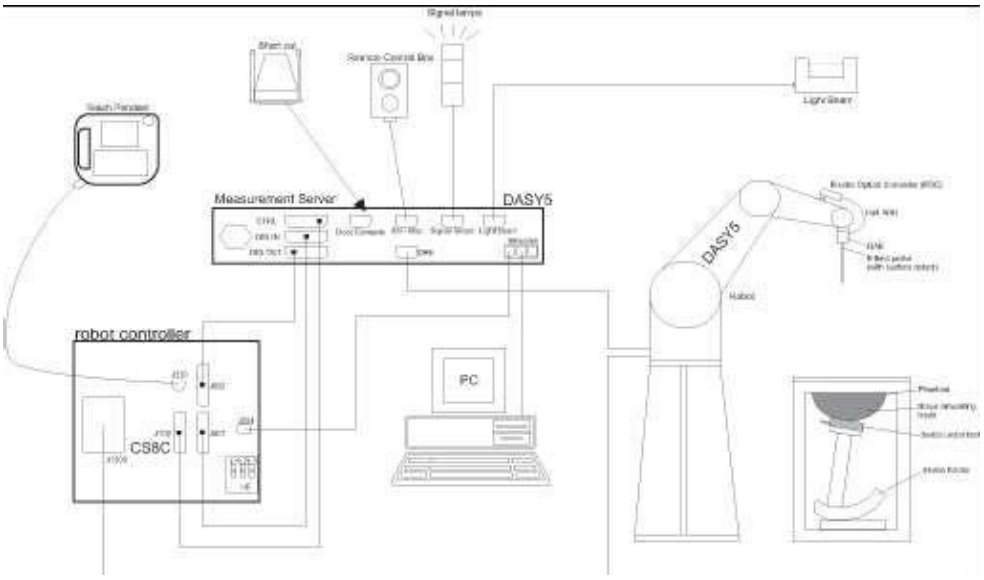

Picture 7.1-1 SAR Lab Test Measurement Set-up

- A standard high precision 6-axis robot (Stäubli TX=RX family) with controller, teach pendant and software. An arm extension for accommodating the data acquisition electronics (DAE).
- An isotropic field probe optimized and calibrated for the targeted measurement.
- A data acquisition electronics (DAE) which performs the signal amplification, signal multiplexing, AD-conversion, offset measurements, mechanical surface detection, collision detection, etc. The unit is battery powered with standard or rechargeable batteries. The signal is optically transmitted to the EOC.
- The Electro-optical converter (EOC) performs the conversion from optical to electrical signals for the digital communication to the DAE. To use optical surface detection, a special version of the EOC is required. The EOC signal is transmitted to the measurement server.
- The function of the measurement server is to perform the time critical tasks such as signal filtering, control of the robot operation and fast movement interrupts.
- The Light Beam used is for probe alignment. This improves the (absolute) accuracy of the probe positioning.
- A computer running WinXP and theDASY5 software.
- Remote control and teach pendant as well as additional circuitry for robot safety such as
- warning lamps, etc.
- The phantom, the device holder and other accessories according to the targeted measurement.

7.2 DASY5 E-field Probe System

The SAR measurements were conducted with the dosimetric probe designed in the classical triangular configuration and optimized for dosimetric evaluation. The probe is constructed using the thick film technique; with printed resistive lines on ceramic substrates. The probe is equipped with an optical multifiber line ending at the front of the probe tip. It is connected to the EOC box on the robot arm and provides an automatic detection of the phantom surface. Half of the fibers are connected to a pulsed infrared transmitter, the other half to a synchronized receiver. As the probe approaches the surface, the reflection from the surface produces a coupling from the transmitting to the receiving fibers. This reflection increases first during the approach, reaches maximum and then decreases. If the probe is flatly touching the surface, the coupling is zero. The distance of the coupling maximum to the surface is independent of the surface reflectivity and largely independent of the surface to probe angle. The DASY5 software reads the reflection durning a software approach and looks for the maximum using 2ndord curve fitting. The approach is stopped at reaching the maximum.

Probe Specifications:

Model: EX3DV4

Frequency: 650MHz — 6GHz

Calibration: In head and body simulating tissue at Frequencies from 650 up to 4900MHz

Linearity: ± 0.2dB

Dynamic Range: 10mW/kg-100W/kg

Probe Length: 330 mm

Probe Tip Length: 20mm

Body Diameter: 12 mm

Tip Diameter: 2.5mm

Tip-Center : 1 mm

Application: SAR Dosimetry Test Compliance tests of trackers Dosimetry in strong gradient fields

Picture 7-2 Near-field Probe

Picture 7-3 E-field Probe

7.3 E-field Probe Calibration

Each E-Probe/Probe Amplifier combination has unique calibration parameters. A TEM cell calibration procedure is conducted to determine the proper amplifier settings to enter in the probe parameters. The amplifier settings are determined for a given frequency by subjecting the probe to a known E-field density (1 mW/cm^2) using an RF Signal generator, TEM cell, and RF Power Meter.
The free space E-field from amplified probe outputs is determined in a test chamber. This calibration can be performed in a TEM cell if the frequency is below 1 GHz and inn a waveguide or other methodologies above 1 GHz for free space. For the free space calibration, the probe is placed in the volumetric center of the cavity and at the proper orientation with the field. The probe is then rotated 360 degrees until the three channels show the maximum reading. The power density readings equates to 1 mW/ cm^2..
E-field temperature correlation calibration is performed in a flat phantom filled with the appropriate simulated brain tissue. The E-field in the medium correlates with the temperature rise in the dielectric medium. For temperature correlation calibration a RF transparent thermistor-based temperature probe is used in conjunction with the E-field probe.

$$SAR = C\frac{\Delta T}{\Delta t}$$

Where:

Δt = Exposure time (30 seconds),

C = Heat capacity of tissue (brain or muscle),

ΔT = Temperature increase due to RF exposure.

$$SAR = \frac{|E|^2 \cdot \sigma}{\rho}$$

Where:

σ = Simulated tissue conductivity,

ρ = Tissue density (kg/m^3).

7.4 Other Test Equipment

7.4.1 Data Acquisition Electronics(DAE)

The data acquisition electronics consist of a highly sensitive electrometer-grade preamplifier with auto-zeroing, a channel and gain-switching multiplexer, a fast 16 bit AD-converter and a command decoder with a control logic unit. Transmission to the measurement server is accomplished through an optical downlink for data and status information, as well as an optical uplink for commands and the clock.
The mechanical probe mounting device includes two different sensor systems for frontal and sideways probe contacts. They are used for mechanical surface detection and probe collision detection.
The input impedance of the DAE is 200 MOhm; the inputs are symmetrical and floating. Common mode rejection is above 80 dB.

Picture7.4.1-1: DAE

7.4.2 Robot

The SPEAG DASY system uses the high precision robots (DASY5: TX90) type from Stäubli SA (France). For the 6-axis controller system, the robot controller version from Stäubli is used. The Stäubli robot series have many features that are important for our application:

- High precision (repeatability 0.02mm)
- High reliability (industrial design)
- Low maintenance costs (virtually maintenance free due to direct drive gears; no belt drives)
- Jerk-free straight movements (brushless synchron motors; no stepper motors)
- Low ELF interference (motor control fields shielded via the closed metallic construction shields)

Picture7.4.2-1: DASY 5

7.4.3 Measurement Server

The Measurement server is based on a PC/104 CPU broad with CPU (DASY5: 400 MHz, Intel Celeron), chipdisk (DASY5: 128MB), RAM (DASY5: 128MB). The necessary circuits for communication with the DAE electronic box, as well as the 16 bit AD converter system for optical detection and digital I/O interface are contained on the DASY I/O broad, which is directly connected to the PC/104 bus of the CPU broad.

The measurement server performs all real-time data evaluation of field measurements and surface detection, controls robot movements and handles safety operation. The PC operating system cannot interfere with these time critical processes. All connections are supervised by a watchdog, and disconnection of any of the cables to the measurement server will automatically disarm the robot and disable all program-controlled robot movements. Furthermore, the measurement server is equipped with an expansion port which is reserved for future applications. Please note that this expansion port does not have a standardized pinout, and therefore only devices provided by SPEAG can be connected. Devices from any other supplier could seriously damage the measurement server.

Picture 7.4.3-1: Server for DASY 5

7.4.4 Device Holder for Phantom

The SAR in the phantom is approximately inversely proportional to the square of the distance between the source and the liquid surface. For a source at 5mm distance, a positioning uncertainty of ±0.5mm would produce a SAR uncertainty of ±20%. Accurate device positioning is therefore crucial for accurate and repeatable measurements. The positions in which the devices must be measured are defined by the standards.

The DASY device holder is designed to cope with the different positions given in the standard. It has two scales for device rotation (with respect to the body axis) and device inclination (with respect to the line between the ear reference points). The rotation centers for both scales is the ear reference point (ERP). Thus the device needs no repositioning when changing the angles. The DASY device holder is constructed of low-loss POM material having the following dielectric parameters:

relative permittivity=3 and loss tangent=0.02. The amount of dielectric material has been reduced in the closest vicinity of the device, since measurements have suggested that the influence of the clamp on the test results could thus be lowered.

<Laptop Extension Kit>

The extension is lightweight and made of POM, acrylic glass and foam. It fits easily on the upper part of the Mounting Device in place of the phone positioner. The extension is fully compatible with theTwin-SAM and ELI phantoms.

Picture 7.4.4-1: Device Holder

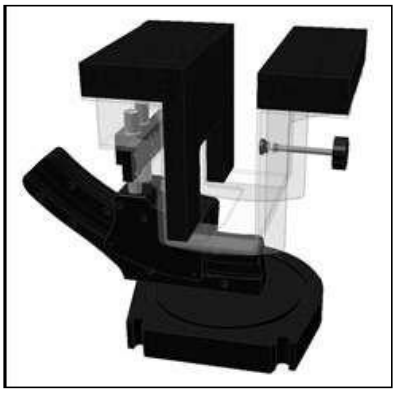

Picture 7.4.4-2: Laptop Extension Kit

7.4.5 Phantom

The SAM Twin Phantom V4.0 is constructed of a fiberglass shell integrated in a table. The shape of the shell is based on data from an anatomical study designed to

Represent the 90th percentile of the population. The phantom enables the dissymmetric evaluation of SAR for both left and right handed handset usage, as well as body-worn usage using the flat phantom region. Reference markings on the Phantom allow the complete setup of all predefined phantom positions and measurement grids by manually teaching three points in the robot. The shell phantom has a 2mm shell thickness (except the ear region where shell thickness increases to 6 mm).

Shell Thickness: 2 ± 0. 2 mm

Filling Volume: Approx. 25 liters

Dimensions: 810 x l000 x 500 mm (H x L x W)

Available: Special

Picture 7.4.5-1: SAM Twin Phantom

8.Position of the wireless device in relation to the phantom

8.1 General considerations

This standard specifies two handset test positions against the head phantom – the "cheek" position and the "tilt" position.

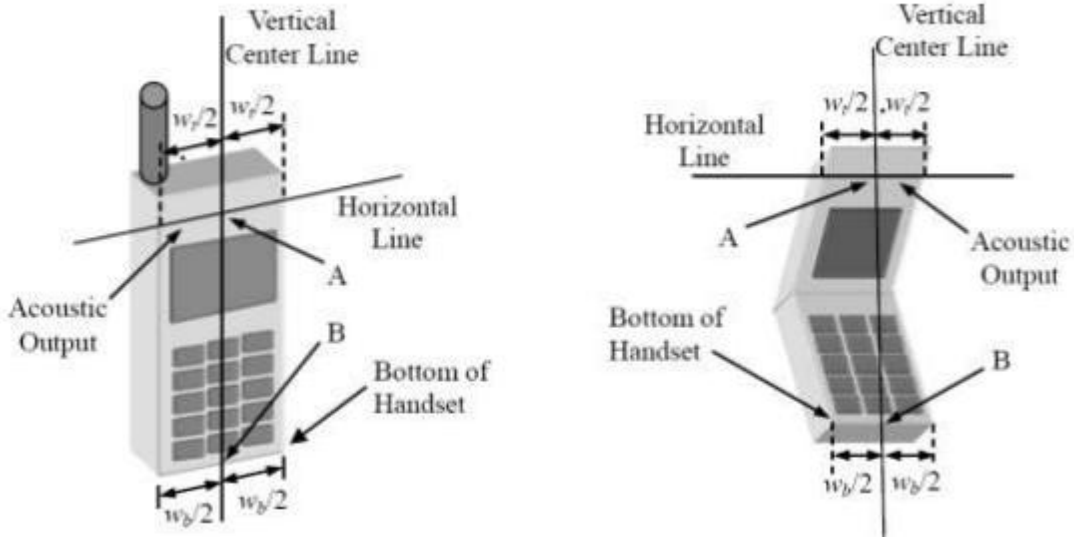

w_t	Width of the handset at the level of the acoustic
w_b	Width of the bottom of the handset
A	Midpoint of the width w_t of the handset at the level of the acoustic output
B	Midpoint of the width W_b of the bottom of the handset

Picture 12-a Typical "fixed" case handset **Picture 12-b Typical "clam-shell" case handset**

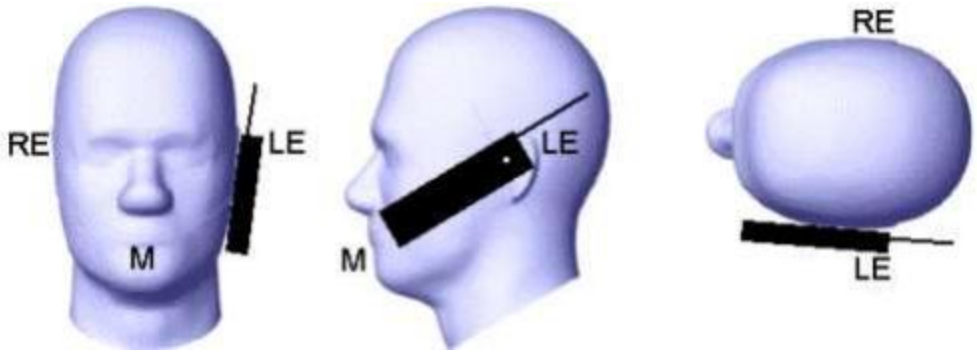

Picture 8.1-1 Cheek position of the wireless device on the left side of SAM

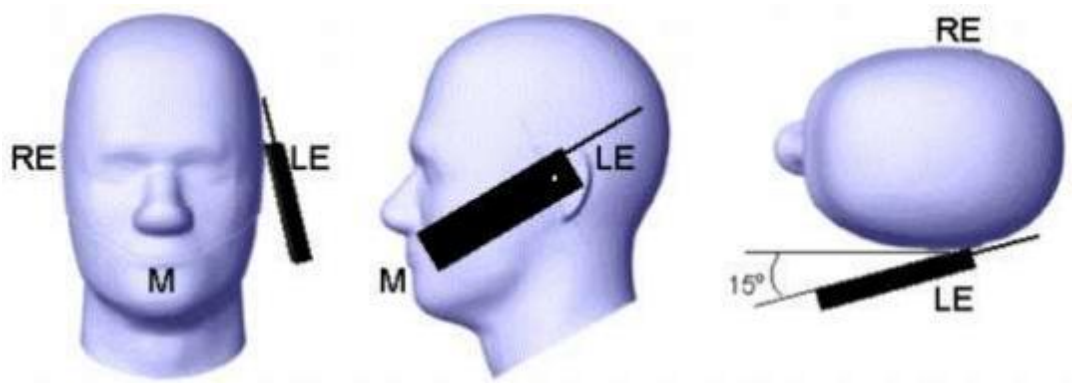

Picture 8.1-2 Tilt position of the wireless device on the left side of SAM

8.2 Body-worn device

A typical example of a body-worn device is a tracker, wireless enabled PDA or other battery operated wireless device with the ability to transmit while mounted on a person's body using a carry accessory approved by the wireless device manufacturer.

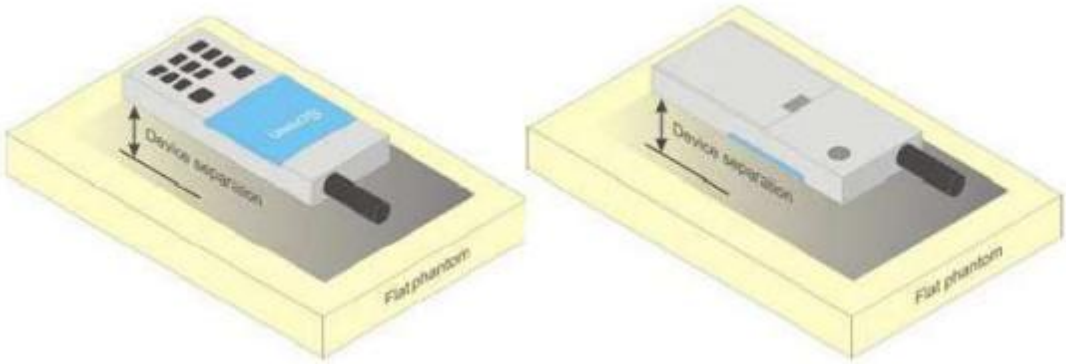

Picture 8.2-1 Test positions for body-worn devices

8.3 Desktop device

A typical example of a desktop device is a wireless enabled desktop computer placed on a table or desk when used.The DUT shall be positioned at the distance and in the orientation to the phantom that corresponds to the intended use as specified by the manufacturer in the user instructions. For devices that employ an external antenna with variable positions, tests shall be performed for all antenna positions specified. Picture16 show positions for desktop device SAR tests. If the intended use is not specified, the device shall be tested directly against the flat phantom.

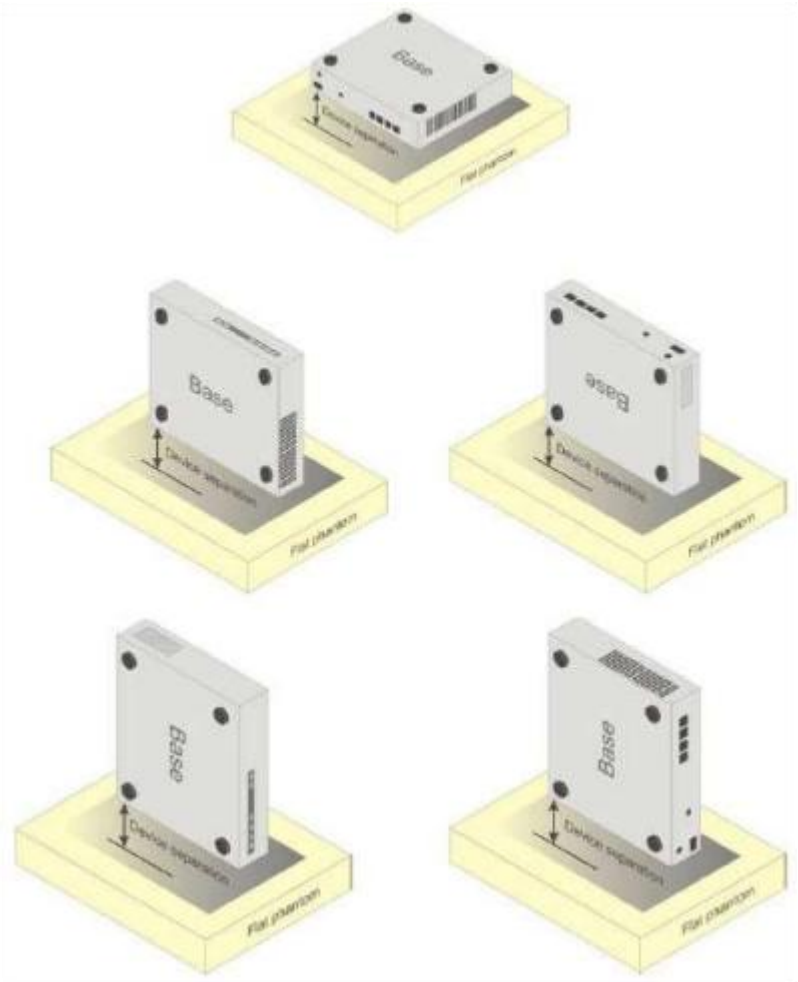

Picture 8.3-1 Test positions for desktop devices

8.4 DUT Setup Photo

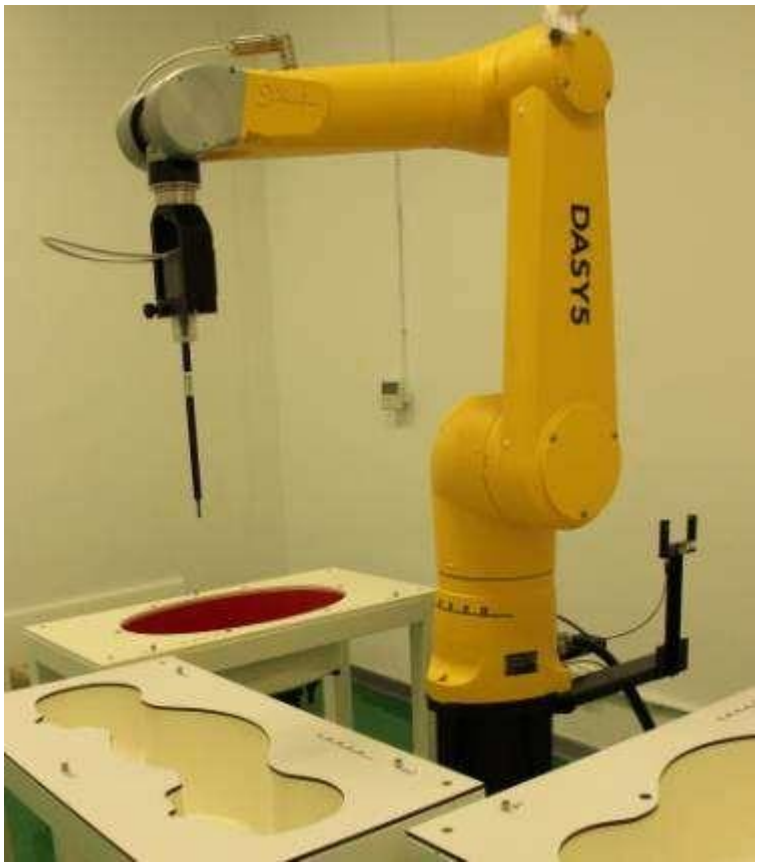

Picture 8.4-1: Specific Absorption Rate Test Layout

9.Tissue Simulating Liquids

9.1 Equivalent Tissues

The liquid used for the frequency range of 650-6000 MHz consisted of water, sugar, salt and Cellulose. The liquid has been previously proven to be suited for worst-case. The Table 9.1-1 and 9.1-2 shows the detail solution. The following tissue formulations are provided for reference only as some of the parameters have not been thoroughly verified. The composition of ingredients may be modified accordingly to achieve the desired target tissue parameters required for routine SAR evaluation.

Table 9.1-1 Composition of the Head Tissue Equivalent Matter

Frequency (MHz)	835	900	1800	1950	2300	2450	2600	5800
Ingredients (% by weight)								
Water	41.45	40.92	55.242	54.89	56.34	58.79	58.79	65.53
Sugar	56	56.5	/	/	/	/	/	/
Salt	1.45	1.48	0.306	0.18	0.14	0.06	0.06	/
Preventol	0.1	0.1	/	/	/	/	/	/
Cellulose	1	1	/	/	/	/	/	/
GlycolMonobutyl	/	/	44.452	44.93	43.52	41.15	41.15	/
Diethylenglycol momohexyl ether	/	/	/	/	/	/	/	17.24
Triton X-100	/	/	/	/	/	/	/	17.23
Dielectric Parameters	ε=41.5	ε=41.5	ε=40.0	ε=40.0	ε=39.5 σ =1.67	ε=39.2 σ =1.80	ε=39.0	ε=35.3
Target Value	σ=0.90	σ=0.97	σ=1.40	σ=1.40			σ=1.96	σ=5.27

Table 9.1-2 Targets for tissue simulating liquid

Frequency (MHz)	Liquid Type	Conductivity (σ)	± 5% Range	Permittivity (ε)	± 5% Range
750	Head	0.89	0.846~0.934	41.9	39.805~43.995
835	Head	0.90	0.855~0.945	41.5	39.425~43.575
900	Head	0.97	0.922~1.018	41.5	39.425~43.575
1450	Head	1.20	1.140~1.260	40.5	38.475~42.525
1800	Head	1.40	1.330~1.470	40.0	38.000~42.000
1900	Head	1.40	1.330~1.470	40.0	38.000~42.000
1950	Head	1.40	1.330~1.470	40.0	38.000~42.000
2000	Head	1.40	1.330~1.470	40.0	38.000~42.000
2100	Head	1.49	1.416~1.564	39.8	37.810~41.790
2450	Head	1.80	1.710~1.890	39.2	37.240~41.160
2600	Head	1.96	1.862~2.058	39.0	37.050~40.950
3000	Head	2.40	2.280~2.520	38.5	36.575~40.425
3500	Head	2.91	2.765~3.055	37.9	36.005~39.795
4000	Head	3.43	3.259~3.601	37.4	35.530~39.270
4500	Head	3.94	3.743~4.137	36.8	34.960~38.640
5000	Head	4.45	4.228~4.672	36.2	34.390~38.010
5200	Head	4.66	4.427~4.893	36.0	34.200~37.800
5400	Head	4.86	4.617~5.103	35.8	34.010~37.590
5600	Head	5.07	4.817~5.323	35.5	33.725~37.275
5800	Head	5.27	5.007~5.533	35.3	33.535~37.065
6000	Head	5.48	5.206~5.754	35.1	33.345~36.855

9.2 Dielectric Performance

Table 9.2-1: Dielectric Performance of Head Tissue Simulating Liquid

Frequency (MHz)	Head(Standard)		Temperature	Date	Test Result		Deviation	
	Permittivity ε	Conductivity σ			Permittivity ε	Conductivity σ	Permittivity ε	Conductivity σ
835	41.50	0.90	20.4℃	2023-08-25	40.640	0.916	-2.07%	1.78%
835	41.50	0.90	20.3℃	2023-09-08	40.749	0.911	-1.81%	1.22%
835	41.50	0.90	20.2℃	2023-09-14	40.539	0.922	-2.32%	2.44%
1750	40.10	1.37	20.5℃	2023-09-11	38.810	1.324	-3.22%	-3.36%
1900	40.00	1.40	20.4℃	2023-08-25	38.658	1.405	-3.36%	0.36%
1900	40.00	1.40	20.3℃	2023-09-08	38.557	1.417	-3.61%	1.21%
2450	39.20	1.80	20.4℃	2023-08-25	37.807	1.858	-3.55%	3.22%
2600	39.00	1.96	20.2℃	2023-08-28	37.478	1.964	-3.90%	0.20%
5300	35.90	4.76	20.2℃	2023-08-28	34.868	4.612	-2.87%	-3.11%

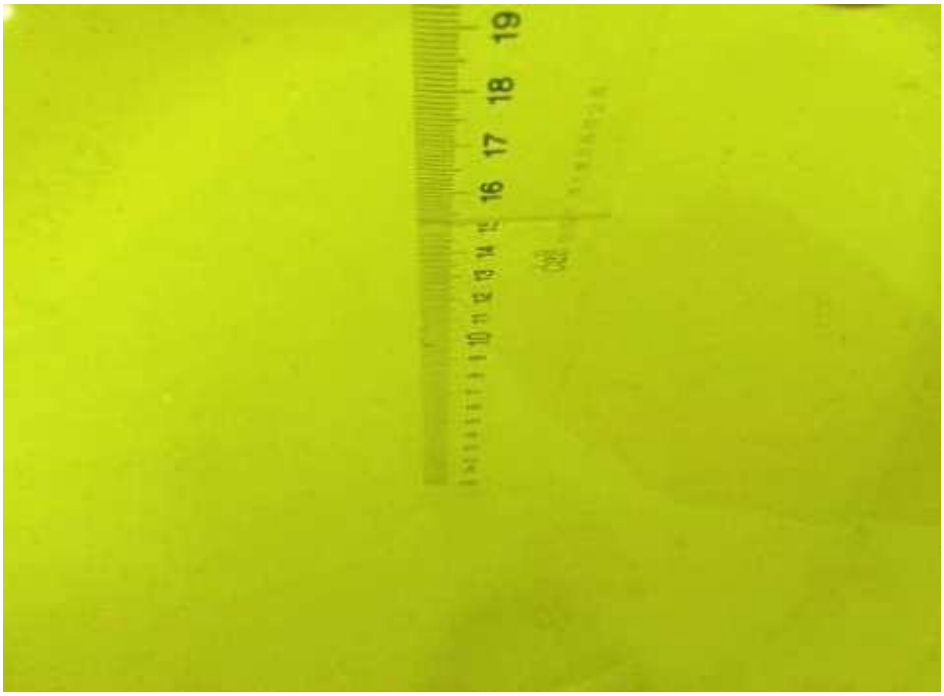

Picture 9.2-1: Liquid depth in the Flat Phantom

10.System Validation

10.1 System Validation

Each DASY system is equipped with one or more system validation kits. These units, together with the predefined measurement procedures within the DASY software, enable the user to conduct the system performace check and system validation. System validation kit includes a dipole, tripod holder to fix it underneath the flat phantom and a corresponding distance holder.

10.2 System Setup

In the simplified setup for system evaluation, the DUT is replaced by a calibrated dipole and the power source is replaced by a continuous wave that comes from a signal generator. The calibrated dipole must be placed beneath the flat phantom section of the SAM twin phantom with the correct distance holder. The distance holder should touch the phantom surface with a light pressure at the reference marking and be oriented parallel to the long side of the phantom. The equipment setup is shown below:

Picture 10.2-1 System Setup for System Evaluation

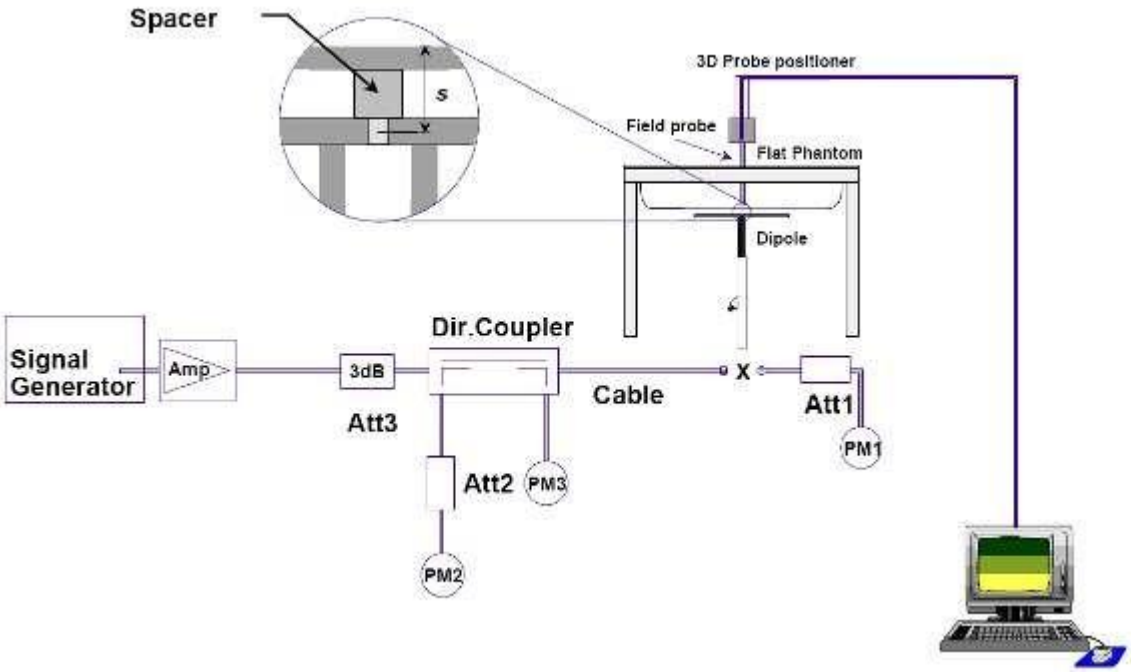

The output power on dipole port must be calibrated to 24 dBm (250mW) before dipole is connected. The results are normalized to 1 W input power.

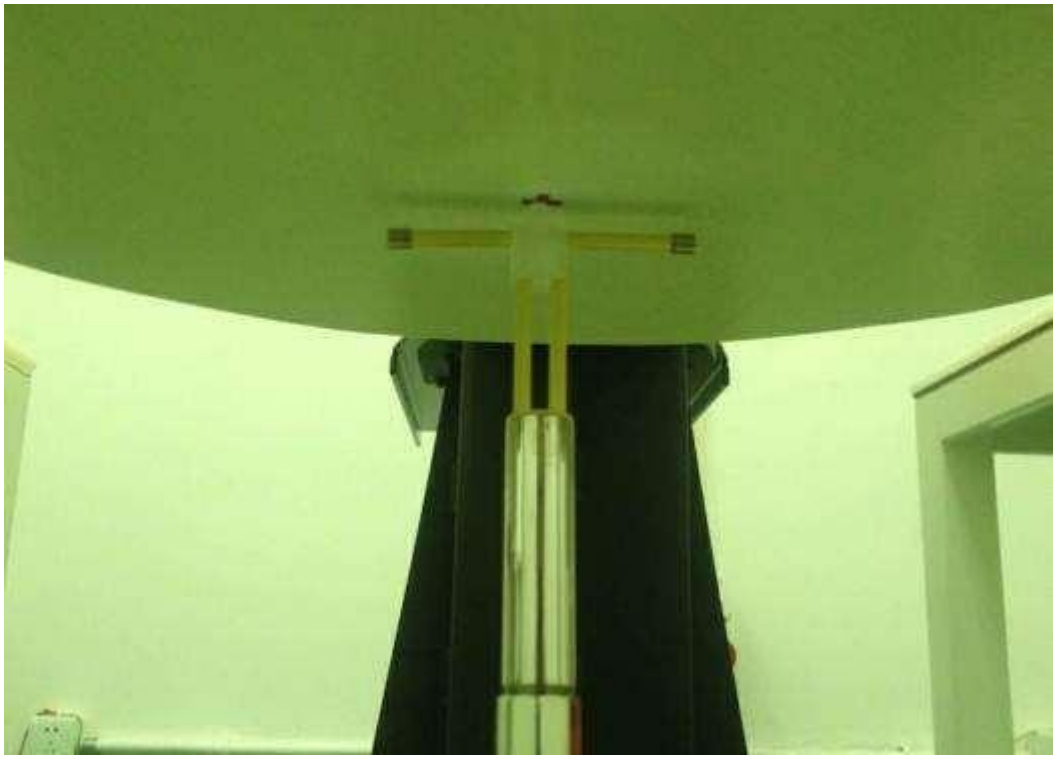

Picture 10.2-2: Photo of Dipole Setup

Table 10.2-1: System Validation of Head

Frequency (MHz)	Average Target Value (w/kg)		Temperature	Date	Test Result (w/kg)		Deviation (w/kg)	
	10g	1g			10g	1g	10g	1g
835	6.37	9.54	21.5℃	2023-08-25	6.20	9.56	-2.67%	0.21%
835	6.37	9.54	21.5℃	2023-09-08	6.08	9.32	-4.55%	-2.31%
835	6.37	9.54	21.3℃	2023-09-14	6.12	9.44	-3.92%	-1.05%
1750	18.90	35.80	21.6℃	2023-09-11	19.64	37.36	3.92%	4.36%
1900	20.20	39.20	21.5℃	2023-08-25	21.00	40.80	3.96%	4.08%
1900	20.20	39.20	21.5℃	2023-09-08	20.76	40.40	2.77%	3.06%
2450	24.70	53.80	21.5℃	2023-08-25	24.16	52.40	-2.19%	-2.60%
2600	24.70	56.00	21.4℃	2023-08-28	25.28	56.40	2.35%	0.71%
5300	22.60	78.70	21.4℃	2023-08-28	22.90	79.50	1.33%	1.02%
NOTE: The system verifies that the measured input power level is equivalent to 250mW for 0.6GHz to 3GHz and above 3GHz is equivalent to 100mW, and the measured results are compared with the target value by converting to 1W.								

11. Measurement Procedures

11.1 Tests to be performed

In order to determine the highest value of the peak spatial-average SAR of a handset, all device positions, configurations and operational modes shall be tested for each frequency band according to steps 1 to 3 below. A flowchart of the test process is shown in Picture 19

Step 1: The tests described in 11.2 shall be performed at the channel that is closest to the centre of the transmit frequency band (f_c) for:

a) all device positions (cheek and tilt, for both left and right sides of the SAM phantom, as described in Chapter 8),

b) all configurations for each device position in a), e.g., antenna extended and retracted, and

c) all operational modes, e.g., analogue and digital, for each device position in a) and configuration in b) in each frequency band.

If more than three frequencies need to be tested according to 11.1 (i.e., N_c > 3), then all frequencies, configurations and modes shall be tested for all of the above test conditions.

Step 2: For the condition providing highest peak spatial-average SAR determined in Step 1, perform all tests described in 11.2 at all other test frequencies, i.e., lowest and highest frequencies. In addition, for all other conditions (device position, configuration and operational mode) where the peak spatial-average SAR value determined in Step 1 is within 3 dB of the applicable SAR limit, it is recommended that all other test frequencies shall be tested as well.

Step 3: Examine all data to determine the highest value of the peak spatial-average SAR found in Steps 1 to 2.

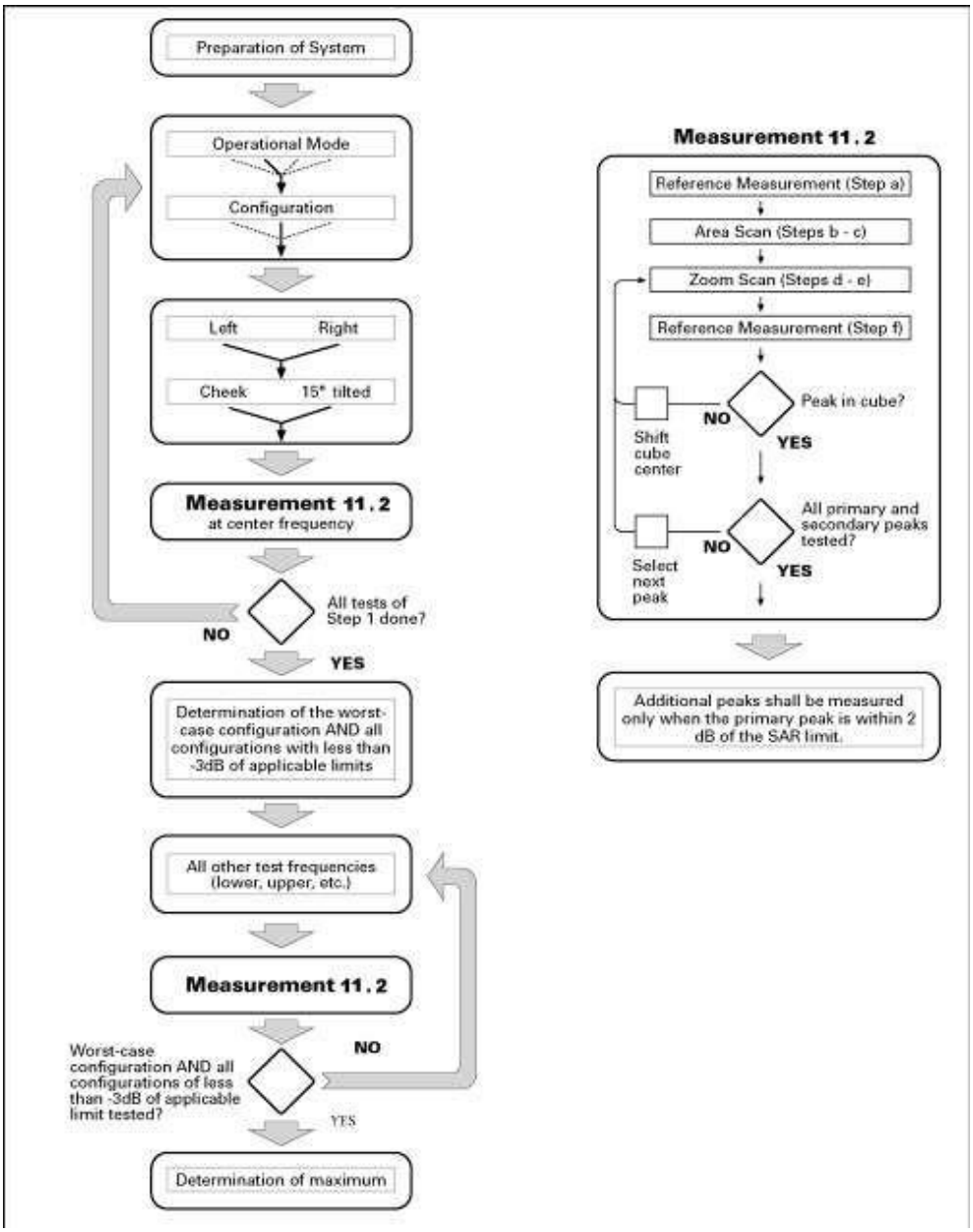

Picture 11.1-1: Block diagram of the tests to be performed

11.2 Measurement procedure

The following procedure shall be performed for each of the test conditions (see Picture 19) described in 11.1:

a) Measure the local SAR at a test point within 8 mm or less in the normal direction from the inner surface of the phantom.

b) Measure the two-dimensional SAR distribution within the phantom (area scan procedure). The boundary of the measurement area shall not be closer than 20 mm from the phantom side walls. The distance between the measurement points should enable the detection of the location of local maximum with an accuracy of better than half the linear dimension of the tissue cube after interpolation. A maximum grip spacing of 20 mm for frequencies below 3 GHz and (60/f [GHz]) mm for frequencies of 3GHz and greater is recommended. The maximum distance between the geometrical centre of the probe detectors and the inner surface of the phantom shall be 5 mm for frequencies below 3 GHz andδIn(2)/2 mm for frequencies of 3 GHz and greater, whereδis the plane wave skin depth and In(x) is the natural logarithm. The maximum variation of the sensor-phantom surface shall be ±1 mm for frequencies below 3 GHz and ±0.5 mm for frequencies of 3 GHz and greater. At all measurement points the angle of the probe with respect to the line normal to the surface should be less than 5°. If this cannot be achieved for a measurement distance to the phantom inner surface shorter than the probe diameter, additional uncertainty evaluation is needed.

c) From the scanned SAR distribution, identify the position of the maximum SAR value, in addition identify the positions of any local maxima with SAR values within 2 dB of the maximum value that are not within the zoom-scan volume; additional peaks shall be measured only when the primary peak is within 2 dB of the SAR limit. This is consistent with the 2 dB threshold already stated;

d) Measure the three-dimensional SAR distribution at the local maxima locations identified in step

e) The horizontal grid step shall be (24 / f[GHz]) mm or less but not more than 8 mm. The minimum zoom size of 30 mm by 30 mm and 30 mm for frequencies below 3 GHz. For higher frequencies, the minimum zoom size of 22 mm by 22 mm and 22 mm. The grip step in the vertical direction shall be (8-f[GHz]) mm or less but not more than 5 mm, if uniform spacing is used. If variable spacing is used in the vertical direction, the maximum spacing between the two closest measured points to the phantom shell shall be (12 / f[GHz]) mm or less but not more than 4 mm, and the spacing between father points shall increase by an incremental factor not exceeding 1.5. When variable spacing is used, extrapolation routines shall be tested with the same spacing as used in measurements. The maximum distance between the geometrical centre of the probe detectors and the inner surface of the phantom shall be 5 mm for frequencies below 3 GHz andδIn(2)/2 mm for frequencies of 3 GHz and greater, where δis the plane wave skin depth and In(x) is the natural logarithm. Separate grids shall be centered on each of the local SAR maxima found in step c). Uncertainties due to field distortion between the media boundary and the dielectric enclosure of the probe should also be minimized, which is achieved is the distance between the phantom surface and physical tip of the probe is larger than probe tip diameter. Other methods may utilize correction procedures for these boundary effects that enable high precision measurements closer than half the probe diameter. For all

measurement points, the angle of the probe with respect to the flat phantom surface shall be less than 5°. If this cannot be achieved an additional uncertainty evaluation is needed.

f) Use post processing(e.g. interpolation and extrapolation) procedures to determine the local SAR values at the spatial resolution needed for mass averaging.

11.3 SAR Measurement for GSM

The following procedures may be considered for each frequency band to determine SAR test reduction for devices operating in GSM/GPRS/EDGE modes to demonstrate RF exposure compliance. GSM voice mode transmits with 1 time slot. GPRS and EDGE may transmit up to 4 time slots in the 8 time-slot frame according to the multislot class implemented in a device.

SAR test reduction for GPRS and EDGE modes is determined by the source-based time-averaged output power specified for production units, including tune-up tolerance. The data mode with highest specified time-averaged output power should be tested for SAR compliance in the applicable exposure conditions. For modes with the same specified maximum output power and tolerance, the higher number time-slot configuration should be tested. GSM voice and GPRS data use GMSK, which is a constant amplitude modulation with minimal peak to average power difference within the time-slot burst. For EDGE, GMSK is used for MCS 1 – MCS 4 and 8-PSK is used for MCS 5 – MCS 9; where 8-PSK has an inherently higher peak-to-average power ratio. The GMSK and 8-PSK EDGE configurations are considered separately for SAR compliance. The GMSK EDGE configurations are grouped with GPRS and considered with respect to time-averaged maximum output power to determine compliance. The 3G SAR test reduction procedure is applied to 8-PSK EDGE with GMSK GPRS/EDGE as the primary mode.

11.4 SAR Measurement for WCDMA

The following procedures are applicable to WCDMA handsets operating under 3GPP Release99, Release 5 and Release 6. The default test configuration is to measure SAR with an established radio link between the DUT and a communication test set using a 12.2kbps RMC (reference measurement channel) configured in Test Loop Mode 1. SAR is selectively confirmed for other physical channel configurations (DPCCH & DPDCH), HSDPA and HSPA (HSUPA/HSDPA) modes according to output power, exposure conditions and device operating capabilities. Both uplink and downlink should be configured with the same RMC or AMR, when required. SAR for Release 5 HSDPA and Release 6 HSPA are measured using the applicable FRC (fixed reference channel) and E-DCH reference channel configurations. Maximum output power is verified according to applicable versions of 3GPP TS 34.121 and SAR must be measured according to these maximum output conditions. When Maximum Power Reduction (MPR) is not implemented according to Cubic Metric (CM) requirements for Release 6 HSPA, the following procedures do not apply.

Table 11.3-1: HSDPA setting for Release 5

Sub-test	β_c	β_d	β_d (SF)	β_c / β_d	β_{hs}	CM (dB)	MPR (dB)
1	2/15	15/15	64	2/15	4/15	1.5	0.5
2	12/15	15/15	64	12/15	24/25	2.0	1
3	15/15	8/15	64	15/8	30/15	2.0	1
4	15/15	4/15	64	15/4	30/15	2.0	1

Table 11.3-2: HSUPA setting for Release 6

Sub-test	β_c	β_d	β_d (SF)	β_c/β_d	β_{hs}	β_{ec}	β_{ed}	β_{ed} (SF)	β_{ed} (codes)	CM (dB)	MPR (dB)	AG Index	E-TFCI
1	11/15	15/15	64	11/15	22/15	209/225	1039/225	4	1	2.0	1.0	20	75
2	6/15	15/15	64	6/15	12/15	12/15	12/15	4	1	3.0	2.0	12	67
3	15/15	9/15	64	15/9	30/15	30/15	β_{ed1}:47/15 β_{ed2}:47/15	4	2	3.0	2.0	15	92
4	2/15	15/15	64	2/15	4/15	4/15	56/75	4	1	2.0	1.0	17	71
5	15/15	15/15	64	15/15	24/15	30/15	134/15	4	1	2.0	1.0	21	81

11.5 SAR Measurement for LTE

SAR tests for LTE are performed with a base station simulator. Closed loop power control was used so the UE transmits with maximum output power during SAR testing.

KDB 941225 D05, start with the largest channel bandwidth and measure SAR for QPSK with 1 RB allocation, using the RB offset and required test channel combination with the highest maximum output power for RB offsets at the upper edge, middle and lower edge of each required test channel.

50% RB allocation for QPSK SAR testing follows 1RB QPSK allocation procedure.

For QPSK with 100% RB allocation, SAR is not required when the highest maximum output power for 100 % RB allocation is less than the highest maximum output power in 50% and 1 RB allocations and the highest reported SAR for 1 RB and 50% RB allocation are ≤ 0.8 W/kg. Otherwise, SAR is measured for the highest output power channel; and if the reported SAR is > 1.45 W/kg, the remaining required test channels must also be tested.

16QAM/64QAM output power for each RB allocation configuration is > not $\frac{1}{2}$dB higher than the same configuration in QPSK and the reported SAR for the QPSK configuration is ≤ 1.45 W/kg;

16QAM/64QAM SAR testing is not required.

Smaller bandwidth output power for each RB allocation configuration is > not $\frac{1}{2}$dB higher than the same configuration in the largest supported bandwidth, and the reported SAR for the largest supported bandwidth is ≤ 1.45 W/kg; smaller bandwidth SAR testing is not required.

For LTE Band 12/26 the maximum bandwidth does not support three non-overlapping channels, when a device supports overlapping channel assignment in a channel bandwidth configuration, the middle channel of the group of overlapping channels should be selected for testing.

LTE band 17/2/5/38/4 SAR test was covered by Band 12/25/26/41/66; according to TCB workshop, SAR test for overlapping LTE bands can be reduced if

The maximum output power, including tolerance, for the smaller band is ≤ the larger band to qualify for the SAR test exclusion.

The channel bandwidth and other operating parameters for the smaller band are fully supported by the larger band.

LTE Carrier Aggregation Conducted Power (Downlink):

Uplink maximum output power measurement with downlink carrier aggregation active should be measured, using the highest output channel measured without downlink carrier aggregation, to confirm that uplink maximum output power with downlink carrier aggregation active remains within the specified tune-up tolerance limits and not more than ¼ dB higher than the maximum output measured without downlink carrier aggregation active.

LTE Carrier Aggregation Conducted Power (Uplink):

UL CA shall be tested based on the worst-case SAR configuration determined from non-CA SAR testing result. The channel BW, channel number, RB allocation, etc. would be selected to allow contiguous CA of PCC and SCC. Uplink output power for UL CA is the total power measured across the PCC and SCC.

UL CA power measurements were performed for each antennas at with QPSK modulation based on the worst-case standalone SAR.

The UL CA mode power measurements represent the total power across both carriers. Measurements were made for all supported PCC bandwidths using the channel/RB combination resulting in the highest standalone output power at the least MPR (0 dB). SCCs were set to use configurations similar to the PCC to establish conservative or worst case equivalent SAR test conditions (highest maximum power with MPR of 0 dB).

The standalone power measurement is the power for the PCC in the non-CA mode (i.e. single carrier power). In all cases the UL CA power is less than or equal to the standalone power.

LTE TDD Considerations:

Time-Division Duplex (TDD) systems, SAR must be tested using a fixed periodic duty factor according to the highest transmission duty factor implemented for the device and supported by the defined 3GPP LTE TDD configurations.

SAR was tested with the highest transmission duty factor (63.33%) using Uplink-downlink configuration 0 and Special sub-frame configuration 7.

11.6 SAR Measurement for Bluetooth & Wi-Fi

Normal network operating configurations are not suitable for measuring the SAR of 802.11 transmitters in general. Unpredictable fluctuations in network traffic and antenna diversity conditions can introduce undesirable variations in SAR results. The SAR for these devices should be measured using chipset based test mode software to ensure that the results are consistent and reliable.

Chipset based test mode software is hardware dependent and generally varies among manufacturers. The device operating parameters established in a test mode for SAR measurements must be identical to those programmed in production units, including output power levels, amplifier gain settings and other RF performance tuning parameters. The test frequencies should correspond to actual channel frequencies defined for domestic use. SAR for devices with switched diversity should be measured with only one antenna transmitting at a time during each SAR measurement, according to a fixed modulation and data rate. The same data pattern should be used for all measurements.

11.7 Power Drift

To control the output power stability during the SAR test, DASY5 system calculates the power drift by measuring the E-field at the same location at the beginning and at the end of the measurement for each test position. These drift values can be found in Section 15 labeled as: (Power Drift [dB]). This ensures that the power drift during one measurement is within 5%.

12.Area Scan Based 1-g SAR

12.1 Requirement of KDB

According to the KDB447498D01v06,when the implementation is based the specific polynomial it algorithm as presented at the 29th Bioelectromagnetics Society meeting (2007)and the estimated 1-g SARis≤1.2W/kg, a zoom scan measurement is not required provided it is also not needed For any other purpose ;for example, if the peak SAR location required for simultaneous transmission SAR test exclusion can be determined accurately by the SAR system or manually to discriminate between is tinctive peak sand scattered noisy SAR distributions from area scans.

There must not be any warning or alert messages due to various measurement concerns identified by the SAR system; for example, noise in measurements ,peaks too close to scan boundary, peaks are too sharp, spatial resolution and uncertainty issues etc. The SAR system verification must also demonstrate that the area scan estimated 1-gSAR is within 3%of the zoom scan 1-g SAR (See Annex A).When all the SAR results for each exposure condition in a frequency band and wireless mode are based on estimated 1-g SAR, the 1-g SAR for the highest SAR configuration must be determined by a zoom scan.

12.2 Fast SAR Algorithms

The approach is based on the area scan measurement applying a frequency dependent attenuation parameter. This attenuation parameter was empiri call determined by analyzing a large number of phones. The MOTOROLAFASTSAR was developed and validated by the MOTOROLA Research Group in Ft .Lauderdale.

In the initial study, an approximation algorithm based on Linearf it was developed. The accuracy of the algorithm has been demonstrated across abroad frequency range(136-2450 MHz)andforboth1-gand 10-g averaged SAR using a sample of 264 SARmeasurementsfrom55 wireless handsets. For the sample size studied, the root-mean-squared errors of the algorithmare1.2%and 5.8%for1-g and 10-g averaged SAR, respectively. The paper describing the algorith min detail is expected to be published inAugust2004 within the Special Issue of Transactions on MTT.

In the second step, the same research group optimized the fitting algorithm to an Polynomia lf it where by the frequency validity was extended to cover the range 30-6000MHz.Detailsof this study can be found in the BEMS2007 Proceedings.Both algorithms are implemented in DASY software.

13.Conducted Output Power

13.1 Power Reduction Procedures

The device uses the receiver to indicate whether the user is making a call in head scenario or not. When there is a voice call and the audio is actively routed through the receiver, which indicating the head exposure condition it will trigger the normal power, when the receiver is off, the device is in low power mode. Mainly the following scenarios:

Table 13.1-1 The Description of the scenarios

	Receiver	Hotspot	GPS
Normal power	ON	OFF	OFF
	ON	ON	OFF
	ON	OFF	ON
	ON	ON	ON
Low power	OFF	OFF	OFF
	OFF	ON	OFF
	OFF	OFF	ON
	OFF	ON	ON

Table 13.1-2 Power reduction

Band	Antenna	Mode	Normal power-Maximum Tune Up(dBm)	Low power
				Power Reduction(dB)
GSM850	ANT 1	CS	32.00	0.00
		GPRS 1TS	32.00	0.00
		GPRS 2TS	30.50	0.00
		GPRS 3TS	27.50	0.00
		GPRS 4TS	26.50	0.00
GSM1900	ANT 2	CS	30.00	0.00
		GPRS 1TS	30.00	0.00
		GPRS 2TS	29.00	0.00
		GPRS 3TS	27.00	0.00
		GPRS 4TS	26.00	0.00
WCDMA Band Ⅱ	ANT 2	RMC	24.50	2.00
WCDMA Band Ⅴ	ANT 1	RMC	23.50	0.00
LTE Band 2	ANT 2	QPSK	23.50	2.00
LTE Band 4	ANT 2	QPSK	23.50	2.00
LTE Band 5	ANT 1	QPSK	22.00	0.00
LTE Band 7	ANT 2	QPSK	24.00	1.50
LTE Band 38	ANT 2	QPSK	24.50	0.00
LTE Band 41	ANT 2	QPSK	24.50	0.00

Wi-Fi2.4G	ANT 4	802.11b	15.50	0.00
Wi-Fi5G U-NII-1&2A	ANT 3	802.11a	11.50	0.00
Wi-Fi5G U-NII-2C	ANT 3	802.11a	11.50	0.00
Wi-Fi5G U-NII-3	ANT 3	802.11a	13.00	0.00
BT	ANT 4	GFSK	11.00	0.00

13.2 Conducted Output Power

Table 13.2-1 The conducted power for GSM850

GSM850			Normal power								
Mode	Modulation	Time Slot	Tune up (dBm)	Measure Power(dBm) Channel/Frequency(MHz)			Devision Factor (dB)	Tune up Max	Average Power(dBm) Channel/Frequency(MHz)		
				128/824.2	190/836.6	251/848.8			128/824.2	190/836.6	251/848.8
Speech	GMSK	1 Tx	32.00	31.49	31.61	31.37	-9.03	22.97	22.46	22.58	22.34
GPRS	GMSK	1 Tx	32.00	31.63	31.52	31.41	-9.03	22.97	22.60	22.49	22.38
		2 Tx	30.50	29.94	29.86	29.76	-6.02	24.48	23.92	23.84	23.74
		3 Tx	27.50	26.78	26.70	26.65	-4.26	23.24	22.52	22.44	22.39
		4 Tx	26.50	25.56	25.42	25.39	-3.01	23.49	22.55	22.41	22.38
EGPRS	8PSK	1 Tx	27.50	25.74	25.70	25.69	-9.03	18.47	16.71	16.67	16.66
		2 Tx	26.00	24.11	24.10	24.01	-6.02	19.98	18.09	18.08	17.99
		3 Tx	23.50	21.58	21.56	21.51	-4.26	19.24	17.32	17.30	17.25
		4 Tx	21.50	19.59	19.53	19.67	-3.01	18.49	16.58	16.52	16.66

Table 13.2-2 The conducted power for GSM1900

GSM1900			Normal power								
Mode	Modulation	Time Slot	Tune up (dBm)	Measure Power(dBm) Channel/Frequency(MHz)			Devision Factor (dB)	Tune up Max	Average Power(dBm) Channel/Frequency(MHz)		
				512/1850.2	661/1880	810/1909.8			512/1850.2	661/1880	810/1909.8
Speech	GMSK	1 Tx	30.00	28.80	28.95	28.87	-9.03	20.97	19.77	19.92	19.84
GPRS	GMSK	1 Tx	30.00	28.79	28.93	28.86	-9.03	20.97	19.76	19.90	19.83
		2 Tx	29.00	27.71	27.86	27.89	-6.02	22.98	21.69	21.84	21.87
		3 Tx	27.00	25.78	25.83	25.78	-4.26	22.74	21.52	21.57	21.52
		4 Tx	26.00	24.70	24.91	24.85	-3.01	22.99	21.69	21.90	21.84
EGPRS	8PSK	1 Tx	27.00	26.06	25.67	25.10	-9.03	17.97	17.03	16.64	16.07
		2 Tx	25.50	24.98	24.23	23.78	-6.02	19.48	18.96	18.21	17.76
		3 Tx	25.50	22.76	22.00	21.40	-4.26	21.24	18.50	17.74	17.14
		4 Tx	25.50	21.10	20.24	19.89	-3.01	22.49	18.09	17.23	16.88

Table 13.2-3 The conducted power for WCDMA Band Ⅱ

Normal power					
WCDMA Band Ⅱ		Maximum Conducted Power (dBm)			
Mode	Test Mode	Tune up	Channel/Frequency(MHz)		
			9262/1852.4	9400/1880	9538/1907.6
WCDMA	RMC	24.50	23.70	23.81	23.94
HSDPA	Subtest1	24.00	23.37	23.39	23.08
	Subtest2	24.00	23.33	23.13	23.31
	Subtest3	23.50	22.79	22.89	22.69
	Subtest4	23.50	22.87	22.98	22.59
HSUPA	Subtest1	24.00	23.37	23.31	23.25
	Subtest2	23.00	22.39	22.21	22.32
	Subtest3	23.50	22.86	22.81	22.89
	Subtest4	23.00	22.38	22.21	22.35
	Subtest5	24.00	23.35	23.15	23.30

Low power					
WCDMA Band Ⅱ		Maximum Conducted Power (dBm)			
Mode	Test Mode	Tune up	Channel/Frequency(MHz)		
			9262/1852.4	9400/1880	9538/1907.6
WCDMA	RMC	22.50	21.67	21.82	21.91
HSDPA	Subtest1	22.00	21.09	21.11	21.39
	Subtest2	22.00	21.37	21.35	21.29
	Subtest3	21.50	20.78	20.57	20.89
	Subtest4	21.50	20.53	20.65	20.87
HSUPA	Subtest1	22.00	21.35	21.23	21.28
	Subtest2	21.00	20.25	20.39	20.19
	Subtest3	21.50	20.80	20.89	20.82
	Subtest4	21.00	20.37	20.25	20.37
	Subtest5	22.00	21.21	21.31	21.35

Table 13.2-4 The conducted power for WCDMA Band Ⅴ

Normal power					
WCDMA Band Ⅴ		Maximum Conducted Power (dBm)			
Mode	Test Mode	Tune up	Channel/Frequency(MHz)		
			4132/826.4	4183/836.6	4233/846.6
WCDMA	RMC	23.50	22.80	22.60	22.58
HSDPA	Subtest1	23.00	22.38	22.16	22.04
	Subtest2	23.00	22.10	22.26	21.82
	Subtest3	22.50	21.98	21.64	21.47
	Subtest4	22.50	21.65	21.54	21.52
HSUPA	Subtest1	23.00	22.38	22.23	22.02
	Subtest2	22.00	21.36	21.09	20.99
	Subtest3	22.00	21.66	21.64	21.64
	Subtest4	22.00	21.36	21.00	21.06
	Subtest5	23.00	22.22	22.29	22.25

Table 13.2-5 The conducted power for LTE Band 2

Normal power						
LTE B2			Maximum Conducted Power (dBm)			
Modulation	RB	RB Offset	Tune up	1.4MHz		
				Channel/Frequency(MHz)		
				18607/1850.7	18900/1880	19193/1909.3
QPSK	1	Low	23.50	22.66	22.96	22.71
		Middle		22.65	22.93	22.89
		High		22.65	22.64	22.81
	50%	Low	23.50	22.80	22.92	22.77
		Middle		22.51	22.71	22.94
		High		22.58	22.75	22.81
	100%	/	22.50	21.84	21.84	21.87
16QAM	1	Low	22.50	22.12	22.38	22.41
		Middle		22.10	22.16	22.13
		High		21.95	22.01	21.98
	50%	Low	22.50	21.80	21.78	21.75
		Middle		21.82	21.79	21.78
		High		21.79	21.78	21.80
	100%	/	21.50	20.89	20.89	20.86
Modulation	RB	RB Offset	Tune up	3MHz		
				Channel/Frequency(MHz)		
				18615/1851.5	18900/1880	19185/1908.5
QPSK	1	Low	23.50	22.68	22.96	22.74
		Middle		22.63	22.96	22.93
		High		22.68	22.69	22.85
	50%	Low	22.50	21.90	21.89	21.90
		Middle		21.63	21.81	21.96
		High		21.68	21.86	21.91
	100%	/	22.50	21.84	21.88	21.90
16QAM	1	Low	22.50	22.15	22.40	22.44
		Middle		22.13	22.16	22.17
		High		21.97	22.05	22.01
	50%	Low	21.50	20.91	20.91	20.87
		Middle		20.93	20.92	20.90
		High		20.89	20.90	20.93
	100%	/	21.50	20.92	20.93	20.89
Modulation	RB	RB Offset	Tune up	5MHz		
				Channel/Frequency(MHz)		
				18625/1852.5	18900/1880	19175/1907.5
QPSK	1	Low	23.50	22.65	22.98	22.70
		Middle		22.61	22.92	22.90

		High		22.65	22.64	22.81
	50%	Low	22.50	21.87	21.95	21.86
		Middle		21.61	21.77	21.95
		High		21.66	21.84	21.87
	100%	/	22.50	21.84	21.87	21.88
16QAM	1	Low	22.50	22.12	22.36	22.41
		Middle		22.10	22.14	22.14
		High		21.94	22.03	21.97
	50%	Low	21.50	20.89	20.87	20.84
		Middle		20.90	20.87	20.86
		High		20.86	20.85	20.89
	100%	/	21.50	20.90	20.89	20.84
Modulation	RB	RB Offset	Tune up	10MHz		
				Channel/Frequency(MHz)		
				18650/1855	18900/1880	19150/1905
QPSK	1	Low	23.50	22.67	22.98	22.73
		Middle		22.64	22.97	22.94
		High		22.67	22.68	22.84
	50%	Low	22.50	21.90	21.93	21.90
		Middle		21.64	21.82	21.94
		High		21.68	21.88	21.92
	100%	/	22.50	21.88	21.89	21.92
16QAM	1	Low	22.50	22.14	22.39	22.43
		Middle		22.13	22.18	22.17
		High		21.97	22.05	22.00
	50%	Low	21.50	20.92	20.92	20.88
		Middle		20.92	20.91	20.89
		High		20.89	20.90	20.93
	100%	/	21.50	20.93	20.94	20.88
Modulation	RB	RB Offset	Tune up	15MHz		
				Channel/Frequency(MHz)		
				18675/1857.5	18900/1880	19125/1902.5
QPSK	1	Low	23.50	22.66	22.95	22.71
		Middle		22.62	22.96	22.91
		High		22.64	22.63	22.80
	50%	Low	22.50	21.88	21.95	21.87
		Middle		21.61	21.77	21.87
		High		21.65	21.85	21.88
	100%	/	22.50	21.86	21.85	21.87
16QAM	1	Low	22.50	22.09	22.37	22.41
		Middle		22.11	22.15	22.15
		High		21.94	22.01	21.97

	50%	Low	21.50	20.89	20.90	20.85
		Middle		20.89	20.86	20.85
		High		20.87	20.86	20.90
	100%	/	21.50	20.90	20.89	20.84
Modulation	RB	RB Offset	Tune up	20MHz		
				Channel/Frequency(MHz)		
				18700/1860	18900/1880	19100/1900
QPSK	1	Low	23.50	22.63	22.91	22.68
		Middle		22.61	22.99	22.89
		High		22.62	22.62	22.77
	50%	Low	22.50	21.85	21.95	21.83
		Middle		21.59	21.96	21.87
		High		21.62	21.97	21.84
	100%	/	22.50	21.83	21.80	21.83
16QAM	1	Low	22.50	22.27	22.33	22.36
		Middle		22.07	22.13	22.11
		High		21.92	21.98	21.95
	50%	Low	21.50	20.86	20.86	20.82
		Middle		20.86	20.84	20.82
		High		20.84	20.81	20.86
	100%	/	21.50	20.88	20.85	20.81
Low power						
LTE B2			**Maximum Conducted Power (dBm)**			
Modulation	RB	RB Offset	Tune up	1.4MHz		
				Channel/Frequency(MHz)		
				18607/1850.7	18900/1880	19193/1909.3
QPSK	1	Low	21.50	20.04	20.08	20.08
		Middle		20.07	20.09	20.02
		High		19.85	19.82	19.90
	50%	Low	21.50	19.90	19.89	19.90
		Middle		19.81	19.96	19.90
		High		19.80	19.82	19.80
	100%	/	21.50	19.83	19.90	19.88
16QAM	1	Low	21.50	20.24	20.15	20.22
		Middle		20.22	20.18	20.20
		High		20.11	20.24	20.18
	50%	Low	21.50	19.82	19.83	19.80
		Middle		19.88	19.91	19.87
		High		19.76	19.84	19.72
	100%	/	21.50	19.83	19.92	19.90
Modulation	RB	RB Offset	Tune up	3MHz		
				Channel/Frequency(MHz)		

				18615/1851.5	18900/1880	19185/1908.5
QPSK	1	Low	21.50	20.06	20.12	20.11
		Middle		20.05	20.12	20.06
		High		19.88	19.87	19.94
	50%	Low	21.50	20.00	20.01	20.03
		Middle		19.93	20.06	20.02
		High		19.90	19.93	19.90
	100%	/	21.50	19.83	19.94	19.91
16QAM	1	Low	21.50	20.27	20.17	20.25
		Middle		20.25	20.18	20.24
		High		20.13	20.28	20.21
	50%	Low	21.50	19.93	19.96	19.92
		Middle		19.99	20.04	19.99
		High		19.86	19.96	19.85
	100%	/	21.50	19.86	19.96	19.93
Modulation	RB	RB Offset	Tune up	5MHz		
				Channel/Frequency(MHz)		
				18625/1852.5	18900/1880	19175/1907.5
QPSK	1	Low	21.50	20.03	20.10	20.07
		Middle		20.03	20.08	20.03
		High		19.85	19.82	19.90
	50%	Low	21.50	19.97	19.96	19.99
		Middle		19.91	20.02	19.97
		High		19.88	19.91	19.86
	100%	/	21.50	19.83	19.93	19.89
16QAM	1	Low	21.50	20.24	20.13	20.22
		Middle		20.22	20.16	20.21
		High		20.10	20.26	20.17
	50%	Low	21.50	19.91	19.92	19.89
		Middle		19.96	19.99	19.95
		High		19.83	19.91	19.81
	100%	/	21.50	19.84	19.92	19.88
Modulation	RB	RB Offset	Tune up	10MHz		
				Channel/Frequency(MHz)		
				18650/1855	18900/1880	19150/1905
QPSK	1	Low	21.50	20.05	20.11	20.10
		Middle		20.06	20.13	20.07
		High		19.87	19.86	19.93
	50%	Low	21.50	20.00	20.01	20.03
		Middle		19.94	20.07	20.01
		High		19.90	19.95	19.91
	100%	/	21.50	19.87	19.95	19.93

16QAM	1	Low	21.50	20.26	20.16	20.24
		Middle		20.25	20.20	20.24
		High		20.13	20.28	20.20
	50%	Low	21.50	19.94	19.97	19.93
		Middle		19.98	20.03	19.98
		High		19.86	19.96	19.85
	100%	/	21.50	19.87	19.97	19.92
Modulation	RB	RB Offset	Tune up	15MHz		
				Channel/Frequency(MHz)		
				18675/1857.5	18900/1880	19125/1902.5
QPSK	1	Low	21.50	20.04	20.07	20.08
		Middle		20.04	20.12	20.04
		High		19.84	19.81	19.89
	50%	Low	21.50	19.98	19.97	20.00
		Middle		19.91	20.02	19.97
		High		19.87	19.92	19.87
	100%	/	21.50	19.85	19.91	19.88
16QAM	1	Low	21.50	20.21	20.14	20.22
		Middle		20.23	20.17	20.22
		High		20.10	20.24	20.17
	50%	Low	21.50	19.91	19.95	19.90
		Middle		19.95	19.98	19.94
		High		19.84	19.92	19.82
	100%	/	21.50	19.84	19.92	19.88
Modulation	RB	RB Offset	Tune up	20MHz		
				Channel/Frequency(MHz)		
				18700/1860	18900/1880	19100/1900
QPSK	1	Low	21.50	20.01	20.03	20.01
		Middle		20.03	20.14	20.02
		High		19.82	19.80	19.86
	50%	Low	21.50	19.95	19.92	19.96
		Middle		19.89	20.07	19.94
		High		19.84	20.08	19.83
	100%	/	21.50	19.82	19.86	19.84
16QAM	1	Low	21.50	20.13	20.10	20.17
		Middle		20.19	20.15	20.18
		High		20.08	20.21	20.15
	50%	Low	21.50	19.88	19.91	19.87
		Middle		19.92	19.96	19.91
		High		19.81	19.87	19.78
	100%	/	21.50	19.82	19.88	19.85

Table 13.2-6 The conducted power for LTE Band 4

Normal power						
LTE B4			Maximum Conducted Power (dBm)			
Modulation	RB	RB Offset	Tune up	1.4MHz		
				Channel/Frequency(MHz)		
				19957/1710.7	20175/1732.5	20393/1754.3
QPSK	1	Low	23.50	22.61	22.70	22.62
		Middle		22.53	22.83	22.57
		High		22.50	22.50	22.45
	50%	Low	23.50	22.69	22.74	22.53
		Middle		22.59	22.76	22.58
		High		22.63	22.74	22.58
	100%	/	22.50	21.65	21.75	21.63
16QAM	1	Low	22.50	21.72	21.71	21.63
		Middle		21.70	21.81	21.71
		High		21.61	21.50	21.62
	50%	Low	22.50	21.59	21.66	21.72
		Middle		21.57	21.62	21.63
		High		21.54	21.65	21.59
	100%	/	21.50	20.61	20.76	20.74
Modulation	RB	RB Offset	Tune up	3MHz		
				Channel/Frequency(MHz)		
				19965/1711.5	20175/1732.5	20385/1753.5
QPSK	1	Low	23.50	22.63	22.74	22.65
		Middle		22.51	22.86	22.61
		High		22.53	22.55	22.49
	50%	Low	22.50	21.79	21.86	21.66
		Middle		21.71	21.86	21.70
		High		21.73	21.85	21.68
	100%	/	22.50	21.65	21.79	21.66
16QAM	1	Low	22.50	21.75	21.73	21.66
		Middle		21.73	21.81	21.75
		High		21.63	21.54	21.65
	50%	Low	21.50	20.70	20.79	20.84
		Middle		20.68	20.75	20.75
		High		20.64	20.77	20.72
	100%	/	21.50	20.64	20.80	20.77
Modulation	RB	RB Offset	Tune up	5MHz		
				Channel/Frequency(MHz)		
				19975/1712.5	20175/1732.5	20375/1752.5
QPSK	1	Low	23.50	22.60	22.72	22.61
		Middle		22.49	22.82	22.58

		High		22.50	22.50	22.45
	50%	Low	22.50	21.76	21.81	21.62
		Middle		21.69	21.82	21.65
		High		21.71	21.83	21.64
	100%	/	22.50	21.65	21.78	21.64
16QAM	1	Low	22.50	21.72	21.69	21.63
		Middle		21.70	21.79	21.72
		High		21.60	21.52	21.61
	50%	Low	21.50	20.68	20.75	20.81
		Middle		20.65	20.70	20.71
		High		20.61	20.72	20.68
	100%	/	21.50	20.62	20.76	20.72
Modulation	RB	RB Offset	Tune up	10MHz		
				Channel/Frequency(MHz)		
				20000/1715	20175/1732.5	20350/1750
QPSK	1	Low	23.50	22.62	22.73	22.64
		Middle		22.52	22.87	22.62
		High		22.52	22.54	22.48
	50%	Low	22.50	21.79	21.86	21.66
		Middle		21.72	21.87	21.69
		High		21.73	21.87	21.69
	100%	/	22.50	21.69	21.80	21.68
16QAM	1	Low	22.50	21.74	21.72	21.65
		Middle		21.73	21.83	21.75
		High		21.63	21.54	21.64
	50%	Low	21.50	20.71	20.80	20.85
		Middle		20.67	20.74	20.74
		High		20.64	20.77	20.72
	100%	/	21.50	20.65	20.81	20.76
Modulation	RB	RB Offset	Tune up	15MHz		
				Channel/Frequency(MHz)		
				20025/1717.5	20175/1732.5	20325/1747.5
QPSK	1	Low	23.50	22.61	22.69	22.62
		Middle		22.50	22.86	22.59
		High		22.49	22.49	22.44
	50%	Low	22.50	21.77	21.82	21.63
		Middle		21.69	21.82	21.65
		High		21.70	21.84	21.65
	100%	/	22.50	21.67	21.76	21.63
16QAM	1	Low	22.50	21.69	21.70	21.63
		Middle		21.71	21.80	21.73
		High		21.60	21.50	21.61

	50%	Low	21.50	20.68	20.78	20.82
		Middle		20.64	20.69	20.70
		High		20.62	20.73	20.69
	100%	/	21.50	20.62	20.76	20.72
Modulation	RB	RB Offset	Tune up	20MHz		
				Channel/Frequency(MHz)		
				20050/1720	20175/1732.5	20300/1745
QPSK	1	Low	23.50	22.69	22.76	22.70
		Middle		22.60	22.93	22.68
		High		22.58	22.59	22.52
	50%	Low	22.50	21.85	21.88	21.70
		Middle		21.78	21.89	21.73
		High		21.78	21.90	21.72
	100%	/	22.50	21.75	21.82	21.70
16QAM	1	Low	22.50	21.82	21.77	21.69
		Middle		21.78	21.89	21.80
		High		21.69	21.58	21.70
	50%	Low	21.50	20.76	20.85	20.90
		Middle		20.72	20.78	20.78
		High		20.70	20.79	20.76
	100%	/	21.50	20.71	20.83	20.80
Low power						
LTE B4			**Maximum Conducted Power (dBm)**			
Modulation	RB	RB Offset	Tune up	1.4MHz		
				Channel/Frequency(MHz)		
				19957/1710.7	20175/1732.5	20393/1754.3
QPSK	1	Low	21.50	19.80	19.81	19.68
		Middle		20.07	20.31	20.21
		High		19.64	19.60	19.66
	50%	Low	21.50	19.84	19.89	19.79
		Middle		19.94	19.89	19.72
		High		20.11	20.14	20.09
	100%	/	21.50	19.78	19.82	19.72
16QAM	1	Low	21.50	19.90	20.10	20.11
		Middle		19.92	19.99	20.07
		High		19.79	19.85	19.85
	50%	Low	21.50	19.97	19.97	19.97
		Middle		19.93	19.93	20.03
		High		19.88	19.89	19.88
	100%	/	21.50	19.88	19.94	19.92
Modulation	RB	RB Offset	Tune up	3MHz		
				Channel/Frequency(MHz)		

				19965/1711.5	20175/1732.5	20385/1753.5
QPSK	1	Low	21.50	19.77	19.77	19.65
		Middle		20.06	20.26	20.19
		High		19.62	19.59	19.63
	50%	Low	21.50	19.81	19.84	19.75
		Middle		19.92	19.85	19.69
		High		20.20	20.21	20.17
	100%	/	21.50	19.87	19.89	19.80
16QAM	1	Low	21.50	19.90	20.07	20.09
		Middle		19.88	19.97	20.03
		High		19.77	19.82	19.83
	50%	Low	21.50	19.94	19.93	19.94
		Middle		19.90	19.91	20.00
		High		19.85	19.84	19.84
	100%	/	21.50	19.86	19.90	19.89
Modulation	RB	RB Offset	Tune up	5MHz		
				Channel/Frequency(MHz)		
				19975/1712.5	20175/1732.5	20375/1752.5
QPSK	1	Low	21.50	19.74	19.75	19.61
		Middle		20.04	20.30	20.16
		High		19.59	19.54	19.59
	50%	Low	21.50	19.78	19.79	19.71
		Middle		19.90	19.81	19.64
		High		20.06	20.07	20.01
	100%	/	21.50	19.75	19.76	19.66
16QAM	1	Low	21.50	19.87	20.03	20.06
		Middle		19.85	19.95	20.00
		High		19.74	19.80	19.79
	50%	Low	21.50	19.92	19.89	19.91
		Middle		19.87	19.86	19.96
		High		19.82	19.79	19.80
	100%	/	21.50	19.84	19.86	19.84
Modulation	RB	RB Offset	Tune up	10MHz		
				Channel/Frequency(MHz)		
				20000/1715	20175/1732.5	20350/1750
QPSK	1	Low	21.50	19.76	19.76	19.64
		Middle		20.07	20.24	20.20
		High		19.61	19.58	19.62
	50%	Low	21.50	19.81	19.84	19.75
		Middle		19.93	19.86	19.68
		High		20.08	20.11	20.06
	100%	/	21.50	19.79	19.78	19.70

16QAM	1	Low	21.50	19.89	20.06	20.08
		Middle		19.88	19.99	20.03
		High		19.77	19.82	19.82
	50%	Low	21.50	19.95	19.94	19.95
		Middle		19.89	19.90	19.99
		High		19.85	19.84	19.84
	100%	/	21.50	19.87	19.91	19.88
Modulation	RB	RB Offset	Tune up	15MHz		
				Channel/Frequency(MHz)		
				20025/1717.5	20175/1732.5	20325/1747.5
QPSK	1	Low	21.50	19.75	19.72	19.62
		Middle		20.05	20.22	20.17
		High		19.58	19.53	19.58
	50%	Low	21.50	19.79	19.80	19.72
		Middle		19.90	19.81	19.64
		High		20.05	20.08	20.02
	100%	/	21.50	19.77	19.74	19.65
16QAM	1	Low	21.50	19.72	19.92	19.94
		Middle		19.74	19.84	19.89
		High		19.62	19.66	19.67
	50%	Low	21.50	19.92	19.92	19.92
		Middle		19.86	19.85	19.95
		High		19.83	19.80	19.81
	100%	/	21.50	19.84	19.86	19.84
Modulation	RB	RB Offset	Tune up	20MHz		
				Channel/Frequency(MHz)		
				20050/1720	20175/1732.5	20300/1745
QPSK	1	Low	21.50	19.84	19.80	19.71
		Middle		20.16	**20.36**	20.27
		High		19.68	19.64	19.67
	50%	Low	21.50	19.88	19.87	19.80
		Middle		20.00	19.89	19.73
		High		20.14	**20.15**	20.10
	100%	/	21.50	19.86	19.81	19.73
16QAM	1	Low	21.50	19.88	20.00	20.01
		Middle		19.82	19.94	19.97
		High		19.72	19.75	19.77
	50%	Low	21.50	19.89	19.88	19.89
		Middle		19.83	19.83	19.92
		High		19.80	19.75	19.77
	100%	/	21.50	19.82	19.82	19.81

Table 13.2-7 The conducted power for LTE Band 5

Normal power						
LTE B5			Maximum Conducted Power (dBm)			
Modulation	RB	RB Offset	Tune up	1.4MHz		
				Channel/Frequency(MHz)		
				20407	20525	20643
QPSK	1	Low	22.00	21.65	21.69	21.53
		Middle		21.52	21.66	21.55
		High		21.58	21.52	21.57
	50%	Low	22.00	21.50	21.56	21.50
		Middle		21.55	21.56	21.51
		High		21.58	21.56	21.55
	100%	/	21.00	20.59	20.58	20.61
16QAM	1	Low	21.00	20.84	20.88	20.93
		Middle		20.82	20.88	20.91
		High		20.97	21.00	20.96
	50%	Low	21.00	20.60	20.52	20.61
		Middle		20.64	20.58	20.68
		High		20.49	20.55	20.58
	100%	/	20.00	19.53	19.60	19.67
Modulation	RB	RB Offset	Tune up	3MHz		
				Channel/Frequency(MHz)		
				20415	20525	20635
QPSK	1	Low	22.00	21.66	21.68	21.55
		Middle		21.51	21.70	21.60
		High		21.60	21.56	21.60
	50%	Low	21.00	20.60	20.68	20.63
		Middle		20.68	20.67	20.62
		High		20.68	20.67	20.66
	100%	/	21.00	20.63	20.63	20.66
16QAM	1	Low	21.00	20.86	20.89	20.95
		Middle		20.85	20.90	20.95
		High		20.99	21.04	20.98
	50%	Low	20.00	19.72	19.66	19.74
		Middle		19.74	19.70	19.79
		High		19.59	19.67	19.71
	100%	/	20.00	19.57	19.65	19.69
Modulation	RB	RB Offset	Tune up	5MHz		
				Channel/Frequency(MHz)		
				20425	20525	20625
QPSK	1	Low	22.00	21.65	21.68	21.53
		Middle		21.49	21.69	21.57

		High		21.57	21.51	21.56
	50%	Low	21.00	20.58	20.64	20.60
		Middle		20.65	20.62	20.58
		High		20.65	20.66	20.62
	100%	/	21.00	20.61	20.59	20.61
16QAM	1	Low	21.00	20.81	20.87	20.93
		Middle		20.83	20.87	20.93
		High		20.96	21.00	20.95
	50%	Low	20.00	19.69	19.64	19.71
		Middle		19.71	19.65	19.75
		High		19.57	19.63	19.68
	100%	/	20.00	19.54	19.60	19.65
Modulation	RB	RB Offset	Tune up	10MHz		
				Channel/Frequency(MHz)		
				20450/829	20525/836.5	20600/844
QPSK	1	Low	22.00	21.62	21.64	21.50
		Middle		21.68	21.71	21.55
		High		21.55	21.50	21.53
	50%	Low	21.00	20.55	20.59	20.52
		Middle		20.62	20.67	20.51
		High		20.63	20.69	20.55
	100%	/	21.00	20.58	20.54	20.57
16QAM	1	Low	21.00	20.77	20.83	20.88
		Middle		20.79	20.85	20.89
		High		20.94	20.97	20.93
	50%	Low	20.00	19.66	19.60	19.68
		Middle		19.68	19.63	19.72
		High		19.54	19.58	19.64
	100%	/	20.00	19.52	19.56	19.62

Table 13.2-8 The conducted power for LTE Band 7

Normal power						
LTE B7			Maximum Conducted Power (dBm)			
Modulation	RB	RB Offset	Tune up	5MHz		
				Channel/Frequency(MHz)		
				20775/2502.5	21100/2535	21425/2567.5
QPSK	1	Low	24.00	22.60	22.98	22.63
		Middle		22.97	22.95	23.02
		High		23.02	22.86	22.88
	50%	Low	23.00	22.02	21.89	21.77
		Middle		22.13	22.32	22.01
		High		22.31	22.07	22.05

	100%	/	23.00	22.12	22.14	22.23
16QAM	1	Low	23.00	22.32	21.99	22.09
		Middle		22.30	22.24	22.31
		High		21.87	21.97	22.05
	50%	Low	22.00	20.85	20.90	20.94
		Middle		21.02	20.96	21.06
		High		20.93	20.98	21.08
	100%	/	22.00	20.94	20.99	21.01
Modulation	RB	RB Offset	Tune up	10MHz		
				Channel/Frequency(MHz)		
				20800/2505	21100/2535	21400/2565
QPSK	1	Low	24.00	22.62	22.99	22.66
		Middle		23.00	23.00	23.04
		High		23.04	22.90	22.91
	50%	Low	23.00	22.05	21.94	21.81
		Middle		22.16	22.32	22.05
		High		22.33	22.11	22.10
	100%	/	23.00	22.16	22.16	22.27
16QAM	1	Low	23.00	22.34	22.02	22.11
		Middle		22.33	22.28	22.34
		High		21.90	21.99	22.08
	50%	Low	22.00	20.88	20.95	20.98
		Middle		21.04	21.00	21.09
		High		20.96	21.03	21.12
	100%	/	22.00	20.97	21.04	21.05
Modulation	RB	RB Offset	Tune up	15MHz		
				Channel/Frequency(MHz)		
				20825/2507.5	21100/2535	21375/2562.5
QPSK	1	Low	24.00	22.61	22.95	22.64
		Middle		22.98	22.99	23.03
		High		23.01	22.85	22.87
	50%	Low	23.00	22.03	21.90	21.78
		Middle		22.13	22.32	22.01
		High		22.30	22.08	22.06
	100%	/	23.00	22.14	22.12	22.22
16QAM	1	Low	23.00	22.29	22.00	22.09
		Middle		22.31	22.25	22.32
		High		21.87	21.95	22.05
	50%	Low	22.00	20.85	20.93	20.95
		Middle		21.01	20.95	21.05
		High		20.94	20.99	21.09
	100%	/	22.00	20.94	20.99	21.01

Modulation	RB	RB Offset	Tune up	20MHz		
				Channel/Frequency(MHz)		
				20850/2510	21100/2535	21350/2560
QPSK	1	Low	24.00	22.58	22.91	22.61
		Middle		22.97	23.05	22.95
		High		22.99	22.84	22.84
	50%	Low	23.00	22.00	21.85	21.74
		Middle		22.11	22.33	21.98
		High		22.27	22.34	22.02
	100%	/	23.00	22.11	22.07	22.18
16QAM	1	Low	23.00	21.92	21.96	22.04
		Middle		22.27	22.23	22.28
		High		21.85	21.92	22.03
	50%	Low	22.00	20.82	20.89	20.92
		Middle		20.98	20.93	21.02
		High		20.91	20.94	21.05
	100%	/	22.00	20.92	20.95	20.98

Low power

LTE B7			Maximum Conducted Power (dBm)			
Modulation	RB	RB Offset	Tune up	5MHz		
				Channel/Frequency(MHz)		
				20775/2502.5	21100/2535	21425/2567.5
QPSK	1	Low	22.50	21.43	21.51	21.43
		Middle		21.52	21.47	21.58
		High		21.45	21.47	21.58
	50%	Low	22.50	21.45	21.52	21.59
		Middle		21.60	21.65	21.71
		High		21.56	21.63	21.65
	100%	/	22.50	21.57	21.66	21.72
16QAM	1	Low	22.50	21.82	21.84	21.94
		Middle		21.80	21.72	21.81
		High		21.61	21.58	21.64
	50%	Low	22.50	21.18	21.02	21.16
		Middle		21.15	21.06	21.19
		High		20.97	20.93	21.00
	100%	/	22.50	21.00	20.96	21.00
Modulation	RB	RB Offset	Tune up	10MHz		
				Channel/Frequency(MHz)		
				20800/2505	21100/2535	21400/2565
QPSK	1	Low	22.50	21.45	21.52	21.46
		Middle		21.55	21.52	21.61
		High		21.47	21.51	21.61

	50%	Low	22.50	21.48	21.57	21.63
		Middle		21.63	21.70	21.73
		High		21.58	21.67	21.70
	100%	/	22.50	21.61	21.68	21.76
16QAM	1	Low	22.50	21.84	21.87	21.96
		Middle		21.83	21.76	21.84
		High		21.64	21.60	21.67
	50%	Low	22.50	21.21	21.07	21.20
		Middle		21.17	21.10	21.22
		High		21.00	20.98	21.04
	100%	/	22.50	21.03	21.01	21.04
Modulation	RB	RB Offset	Tune up	15MHz		
				Channel/Frequency(MHz)		
				20825/2507.5	21100/2535	21375/2562.5
QPSK	1	Low	22.50	21.44	21.48	21.44
		Middle		21.53	21.51	21.59
		High		21.44	21.46	21.57
	50%	Low	22.50	21.46	21.53	21.60
		Middle		21.60	21.65	21.71
		High		21.55	21.64	21.66
	100%	/	22.50	21.59	21.64	21.71
16QAM	1	Low	22.50	21.79	21.85	21.94
		Middle		21.81	21.73	21.82
		High		21.61	21.56	21.64
	50%	Low	22.50	21.18	21.05	21.17
		Middle		21.14	21.05	21.18
		High		20.98	20.94	21.01
	100%	/	22.50	21.00	20.96	21.00
Modulation	RB	RB Offset	Tune up	20MHz		
				Channel/Frequency(MHz)		
				20850/2510	21100/2535	21350/2560
QPSK	1	Low	22.50	21.41	21.44	21.41
		Middle		21.52	21.62	21.58
		High		21.42	21.45	21.54
	50%	Low	22.50	21.43	21.48	21.56
		Middle		21.56	21.73	21.62
		High		21.58	21.75	21.64
	100%	/	22.50	21.56	21.59	21.67
16QAM	1	Low	22.50	21.78	21.81	21.89
		Middle		21.77	21.71	21.78
		High		21.59	21.53	21.62
	50%	Low	22.50	21.15	21.01	21.14

		Middle		21.11	21.03	21.15
		High		20.95	20.89	20.97
	100%	/	22.50	20.98	20.92	20.97

Table 13.2-9 The conducted power for LTE Band 38

Normal power						
LTE B38			Maximum Conducted Power (dBm)			
Modulation	RB	RB Offset	Tune up	5MHz		
				Channel/Frequency(MHz)		
				37775/2572.5	38000/2595	38225/2617.5
QPSK	1	Low	24.50	23.03	22.94	23.00
		Middle		23.08	23.11	23.51
		High		22.97	22.90	23.38
	50%	Low	23.50	21.86	21.74	22.28
		Middle		22.00	21.96	22.30
		High		22.05	22.08	22.05
	100%	/	23.50	22.09	21.97	22.18
16QAM	1	Low	23.50	22.24	22.35	22.23
		Middle		22.22	22.32	22.20
		High		22.15	22.15	22.11
	50%	Low	22.50	21.22	20.98	21.10
		Middle		21.20	21.08	21.06
		High		21.07	21.04	21.07
	100%	/	22.50	21.08	21.03	21.05
Modulation	RB	RB Offset	Tune up	10MHz		
				Channel/Frequency(MHz)		
				37800/2575	38000/2595	38200/2615
QPSK	1	Low	24.50	23.03	22.94	22.89
		Middle		23.08	23.11	23.40
		High		22.97	22.96	23.27
	50%	Low	23.50	21.86	21.88	22.17
		Middle		22.00	21.96	22.19
		High		22.05	22.08	22.08
	100%	/	23.50	22.09	21.97	22.13
16QAM	1	Low	23.50	22.38	22.27	22.23
		Middle		22.28	22.24	22.20
		High		22.21	22.15	22.11
	50%	Low	22.50	21.22	20.98	21.10
		Middle		21.12	21.08	21.06
		High		21.07	21.04	21.07
	100%	/	22.50	21.08	21.03	21.05
Modulation	RB	RB Offset	Tune up	15MHz		

				Channel/Frequency(MHz)		
				37825/2577.5	38000/2595	38175/2612.5
QPSK	1	Low	24.50	23.03	22.94	22.89
		Middle		23.08	23.11	23.37
		High		22.97	22.96	23.27
	50%	Low	23.50	21.86	21.80	22.17
		Middle		22.00	21.88	22.19
		High		22.05	22.00	22.08
	100%	/	23.50	22.09	21.89	22.21
16QAM	1	Low	23.50	22.19	22.16	22.20
		Middle		22.09	22.17	22.11
		High		22.02	22.12	22.00
	50%	Low	22.50	21.11	21.00	21.01
		Middle		21.20	21.22	21.12
		High		21.15	21.18	21.15
	100%	/	22.50	21.11	21.15	21.09
Modulation	RB	RB Offset	Tune up	20MHz		
				Channel/Frequency(MHz)		
				37850/2580	38000/2595	38150/2610
QPSK	1	Low	24.50	23.14	23.05	23.00
		Middle		23.19	23.22	23.43
		High		23.08	23.07	23.30
	50%	Low	23.50	21.97	21.91	22.20
		Middle		22.11	21.99	22.22
		High		22.16	22.11	22.11
	100%	/	23.50	22.20	22.00	22.24
16QAM	1	Low	23.50	22.30	22.27	22.23
		Middle		22.20	22.24	22.20
		High		22.13	22.15	22.11
	50%	Low	22.50	21.14	20.98	21.10
		Middle		21.12	21.14	21.12
		High		21.07	21.10	21.13
	100%	/	22.50	21.08	21.09	21.11

Table 13.2-10 The conducted power for LTE Band 41

Normal power								
LTE B41			Maximum Conducted Power (dBm)					
Modulation	RB	RB Offset	Tune up	5MHz				
				Channel/Frequency(MHz)				
				39675/2498.5	40148/2545.8	40620/2593	41093/2640.3	41565/2687.5
QPSK	1	Low	24.50	23.37	23.47	23.43	23.43	23.61
		Middle		23.68	23.58	23.76	23.68	23.75
		High		23.59	23.47	23.51	23.53	23.68

	50%	Low	23.50	22.47	22.52	22.46	22.69	22.60
		Middle		22.51	22.56	22.54	22.63	22.74
		High		22.62	22.57	22.58	22.62	22.76
	100%	/	23.50	22.43	22.57	22.59	22.69	22.72
16QAM	1	Low	23.50	22.63	22.68	22.49	22.55	22.65
		Middle		22.61	22.64	22.70	22.46	22.35
		High		22.58	22.59	22.58	22.57	22.28
	50%	Low	22.50	21.10	20.92	21.06	21.03	21.30
		Middle		21.18	21.05	21.18	21.12	21.22
		High		21.12	21.16	21.20	21.21	21.13
	100%	/	22.50	21.13	21.14	21.21	21.14	21.15
Modulation	RB	RB Offset	Tune up	10MHz				
				Channel/Frequency(MHz)				
				39700/2501	40160/2547	40620/2593	41080/2639	41540/2685
QPSK	1	Low	24.50	23.39	23.48	23.46	23.44	23.64
		Middle		23.71	23.63	23.80	23.73	23.79
		High		23.61	23.51	23.54	23.57	23.71
	50%	Low	23.50	22.50	22.57	22.50	22.74	22.64
		Middle		22.54	22.61	22.58	22.68	22.78
		High		22.64	22.61	22.63	22.66	22.81
	100%	/	23.50	22.47	22.59	22.63	22.71	22.76
16QAM	1	Low	23.50	22.65	22.71	22.51	22.58	22.67
		Middle		22.64	22.68	22.73	22.50	22.38
		High		22.61	22.61	22.61	22.59	22.31
	50%	Low	22.50	21.13	20.97	21.10	21.08	21.34
		Middle		21.20	21.09	21.21	21.16	21.25
		High		21.15	21.21	21.24	21.26	21.17
	100%	/	22.50	21.16	21.19	21.25	21.19	21.19
Modulation	RB	RB Offset	Tune up	15MHz				
				Channel/Frequency(MHz)				
				39725/2503.5	40173/2548.3	40620/2593	41068/2637.8	41515/2682.5
QPSK	1	Low	24.50	23.38	23.44	23.44	23.40	23.62
		Middle		23.69	23.62	23.77	23.72	23.76
		High		23.58	23.46	23.50	23.52	23.67
	50%	Low	23.50	22.48	22.53	22.47	22.70	22.61
		Middle		22.51	22.56	22.54	22.63	22.74
		High		22.61	22.58	22.59	22.63	22.77
	100%	/	23.50	22.45	22.55	22.58	22.67	22.71
16QAM	1	Low	23.50	22.60	22.69	22.49	22.56	22.65
		Middle		22.62	22.65	22.71	22.47	22.36
		High		22.58	22.57	22.58	22.55	22.28
	50%	Low	22.50	21.10	20.95	21.07	21.06	21.31
		Middle		21.17	21.04	21.17	21.11	21.21
		High		21.13	21.17	21.21	21.22	21.14
	100%	/	22.50	21.13	21.14	21.21	21.14	21.15

Modulation	RB	RB Offset	Tune up	20MHz				
				Channel/Frequency(MHz)				
				39750/2506	40185/2549.5	40620/2593	41055/2636.5	41490/2680
QPSK	1	Low	24.50	23.24	23.30	23.30	23.26	23.48
		Middle		23.72	23.71	23.89	23.69	23.78
		High		23.52	23.32	23.44	23.38	23.53
	50%	Low	23.50	22.42	22.39	22.41	22.64	22.47
		Middle		22.63	22.68	22.70	22.59	22.66
		High		22.55	22.52	22.71	22.57	22.63
	100%	/	23.50	22.39	22.49	22.52	22.53	22.65
16QAM	1	Low	23.50	22.32	22.51	22.38	22.38	22.46
		Middle		22.44	22.49	22.61	22.31	22.18
		High		22.42	22.40	22.50	22.38	22.12
	50%	Low	22.50	21.27	21.11	21.24	21.22	21.48
		Middle		21.34	21.22	21.34	21.29	21.38
		High		21.30	21.32	21.37	21.37	21.30
	100%	/	22.50	21.31	21.30	21.38	21.30	21.32

Table 13.2-11 The conducted power for Wi-Fi 2.4G

Normal power				
Wi-Fi 2.4G			Maximum Conducted Power (dBm)	
Mode	BW	Channel/Frequency(MHz)	Tune up(dBm)	Output Power(dBm)
802.11b	20M	1/2412	15.50	14.41
		6/2437	15.50	14.71
		11/2462	15.50	14.94
802.11g	20M	1/2412	15.00	13.93
		6/2437	15.00	14.20
		11/2462	15.00	14.33
802.11n	20M	1/2412	15.00	13.81
		6/2437	15.00	14.14
		11/2462	15.00	14.17
	40M	3/2422	11.00	10.03
		6/2437	14.00	13.26
		9/2452	11.00	10.32

Table 13.2-12 The conducted power for Wi-Fi 5G

Normal power				
Wi-Fi 5G			Maximum Conducted Power (dBm)	
Mode	BW	Channel/Frequency(MHz)	Tune up	Output Power
802.11a	20M	36/5180	11.50	11.43
		40/5200	11.50	11.19
		48/5240	11.50	10.13
		52/5260	11.50	10.48
		56/5280	11.50	10.74
		60/5300	11.50	10.68
		64/5320	11.50	10.78
		100/5500	11.50	10.18
		116/5580	11.50	10.00
		120/5600	11.50	9.58

802.11a	20M	140/5700	11.50	10.40
		149/5745	13.00	11.78
		157/5785	12.00	10.89
		165/5825	12.00	10.60
802.11n	20M	36/5180	10.50	9.71
		40/5200	10.50	9.45
		48/5240	10.50	9.20
		52/5260	10.50	9.24
		56/5280	10.50	9.26
		60/5300	10.50	8.89
		64/5320	10.50	9.70
		100/5500	9.50	8.16
		116/5580	8.50	7.72
		120/5600	9.50	8.03
		140/5700	9.50	8.28
		149/5745	13.00	11.82
		157/5785	12.00	11.00
		165/5825	12.00	10.37
	40M	38/5190	10.50	9.46
		46/5230	10.50	8.90
		54/5270	10.50	8.76
		62/5310	10.50	9.50
		102/5510	9.50	8.15
		110/5550	9.50	8.02
		118/5590	8.50	7.80
		134/5670	10.50	8.76
		151/5755	12.00	11.24
		159/5795	12.00	10.60
802.11ac	20M	36/5180	10.50	9.59
		40/5200	10.50	9.65
		48/5240	10.50	8.80
		52/5260	9.50	8.40

802.11ac	20M	60/5300	10.50	8.82
		64/5320	10.50	9.12
		100/5500	9.50	8.29
		116/5580	9.50	8.47
		120/5600	9.50	7.95
		140/5700	9.50	8.62
		149/5745	13.00	11.80
		157/5785	12.00	10.86
		165/5825	12.00	10.38
	40M	38/5190	9.50	8.89
		46/5230	9.50	8.17
		54/5270	9.50	8.20
		62/5310	9.50	8.61
		102/5510	9.50	8.05
		110/5550	9.50	8.00
		118/5590	9.50	7.83
		134/5670	9.50	8.67
		151/5755	12.00	11.18
		159/5795	12.00	10.41
	80M	42/5210	9.50	7.58
		58/5290	9.50	8.09
		106/5530	8.50	6.99
		122/5610	8.50	7.22
		138/5690	8.00	6.67
		155/5775	12.00	10.53

Table 13.2-13 The conducted power for BT

Normal power						
BlueTooth	**Maximum Output Power (dBm)**					
Channel/Frequency(MHz)	0/2402		39/2441		78/2480	
Mode	Tune up	Output Power	Tune up	Output Power	Tune up	Output Power
GFSK	11.00	10.25	11.00	10.69	11.00	10.04
DQPSK	11.00	9.96	11.00	9.88	11.00	9.28
8DPSK	11.00	9.99	11.00	9.87	11.00	9.30
Mode	Channel/Frequency(MHz)		Tune up		Output Power	
BLE(1M)	0/2402		0.00		-1.89	
	19/2440		0.00		-1.02	
	39/2480		0.00		-1.74	
BLE(2M)	0/2402		0.00		-1.77	
	19/2440		0.00		-0.88	
	39/2480		0.00		-1.74	

14.Simultaneous TX SAR Considerations

14.1 Introduction

The following procedures adopted from "FCC SAR Considerations for Cell Phones with Multiple Transmitters" are applicable to handsets with built-in unlicensed transmitters such as 802.11 a/b/g and Bluetooth devices which may simultaneously transmit with the licensed transmitter. For this device, bluetooth can transmit simultaneous with the other transmitters.

14.2 Transmit Antenna Position

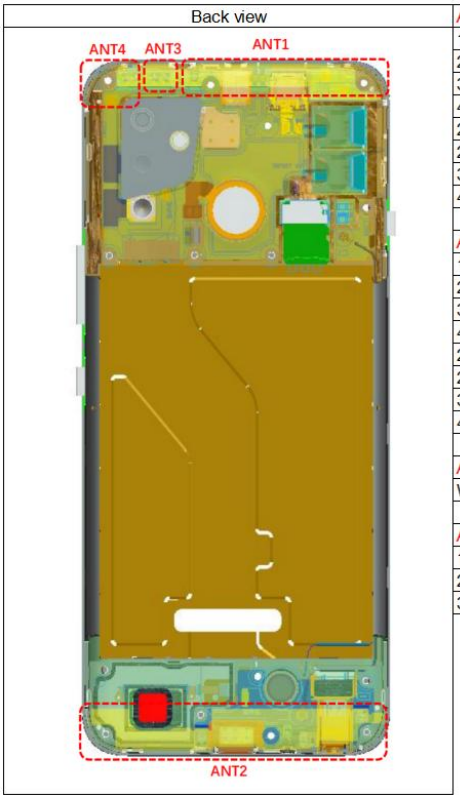

ANT1:LB TRX+MHB DRX
1.LB TRX
2G:GSM850/900
3G:WCDMAB5/B8
4G:LTEB5/B8/B20/B28
2.MHB DRX
2G:GSM1800/1900
3G:WCDMAB1/B2
4G:LTEB1/B2/B3/B4/B7/B38/B41
ANT2:MHB TRX+LBD RX
1.MHB TRX
2G:GSM1800/1900
3G:WCDMAB1/B2
4G:LTEB1/B2/B3/B4/B7/B38/B41
2.LB DRX
2G:GSM850/900
3G:WCDMAB5/B8
4G:LTEB5/B8/B20/B28
ANT3:WIFI_5G
WIFI_5G TRX(a/n/ac)
ANT4:GPS+WIFI_2.4G+BT
1.GPS L1
2.WIFI_2.4G TRX(b/g/n)
3.BT TRX

Picture 14.2-1 Antenna Position

14.3 Simultaneous Transmission for EUT

Table 14.3-1: Maximum Reported SAR of GSM/WCDMA/LTE

Simultaneous Transmission	Antenna	Cellular									Max.SAR$_{1g}$ GSM/WCDMA/LTE
		ANT1	ANT2	ANT2	ANT1	ANT2	ANT2	ANT1	ANT2	ANT2	
	SAR$_{1g}$(W/kg) / Test Position	GSM850	GSM1900	WCDMA Band II	WCDMA Band V	LTE B2	LTE B4	LTE B5	LTE B7	LTE B41	
Head	Left Touch	0.584	0.087	0.143	0.787	0.127	0.286	0.699	0.509	0.188	0.787
	Left Tilt 15°	0.397	0.050	0.108	0.705	0.059	0.044	0.621	0.281	0.115	0.705
	Right Touch	1.031	0.072	0.137	1.030	0.086	0.147	1.017	0.276	0.100	1.031
	Right Tilt 15°	0.485	0.055	0.120	0.838	0.063	0.041	0.647	0.278	0.090	0.838
Hotspot (10mm)	Front Side	0.180	0.330	0.374	0.330	0.247	0.327	0.237	0.458	0.267	0.458
	Back Side	0.243	0.884	0.936	0.365	0.767	1.175	0.352	0.708	0.798	1.175
	Left Side	0.195	0.257	0.254	0.413	0.201	0.225	0.437	0.336	0.206	0.437
	Right Side	0.086	0.071	0.078	0.230	0.083	0.053	0.215	0.106	0.087	0.230
	Top Side	0.226	/	/	0.378	/	/	0.341	/	/	0.378
	Bottom Side	/	0.709	0.999	/	0.789	1.099	/	1.060	0.912	1.099
Body-worn SAR (10mm)	Front Side	0.180	0.330	0.374	0.330	0.247	0.327	0.237	0.458	0.267	0.458
	Back Side	0.243	0.884	0.936	0.365	0.767	1.175	0.352	0.708	0.798	1.175

Table 14.3-2: Maximum Reported SAR of Wi-Fi&BT

Simultaneous Transmission	Antenna	Non-Cellular					
		ANT4	ANT4	ANT5			ANT5
				Wi-Fi 5G			
	SAR$_{1g}$(W/kg) / Test Position	BT	Max.SAR$_{1g}$ Wi-Fi 2.4G	U-NII-1&2A	U-NII-2C	U-NII-3	Max.SAR$_{1g}$Wi-Fi 5G
Head	Left Touch	0.101	0.561	0.460	0.323	0.428	0.460
	Left Tilt 15°	0.068	0.300	0.366	0.215	0.334	0.366
	Right Touch	0.035	0.200	0.371	0.246	0.322	0.371
	Right Tilt 15°	0.029	0.132	0.340	0.179	0.240	0.340
Hotspot (10mm)	Front Side	0.019	0.107	0.066	0.043	0.101	0.101
	Back Side	0.025	0.119	0.092	0.094	0.129	0.129
	Left Side	0.000	0.033	0.055	0.062	0.057	0.062
	Right Side	0.027	0.122	0.066	0.079	0.094	0.094
	Top Side	0.012	0.044	0.134	0.122	0.087	0.134
	Bottom Side	0.000	0.000	0.000	0.000	0.000	0.000
Body-worn SAR (10mm)	Front Side	0.019	0.107	0.066	0.043	0.101	0.101
	Back Side	0.025	0.119	0.092	0.094	0.129	0.129

Table 14.3-3: Simultaneous transmission SAR

Simultaneous Transmission	Antenna	Max.SAR$_{1g}$ GSM/WCDMA/LTE	Non-Cellular			WWAN+Wi-Fi 2.4G	WWAN+Wi-Fi 5G	WWAN+BT	WWAN+Wi-Fi 2.4G+BT	WWAN+Wi-Fi 5G+BT	MAX.ΣSAR$_{1g}$
			ANT4	ANT4	ANT5						
	SAR$_{1g}$(W/kg) / Test Position		BT	Max.SAR$_{1g}$ Wi-Fi 2.4G	Max.SAR$_{1g}$Wi-Fi 5G						
Head	Left Touch	0.787	0.101	0.561	0.460	1.348	1.248	0.888	1.449	1.348	1.449
	Left Tilt 15°	0.705	0.068	0.300	0.366	1.005	1.070	0.773	1.073	1.138	1.138
	Right Touch	1.031	0.035	0.200	0.371	1.231	1.402	1.066	1.266	1.437	1.437
	Right Tilt 15°	0.838	0.029	0.132	0.340	0.970	1.178	0.867	0.999	1.207	1.207
Hotspot (10mm)	Front Side	0.458	0.019	0.107	0.101	0.565	0.559	0.477	0.584	0.577	0.584
	Back Side	1.175	0.025	0.119	0.129	1.295	1.305	1.200	1.320	1.329	1.329
	Left Side	0.437	0.000	0.033	0.062	0.470	0.499	0.437	0.470	0.499	0.499
	Right Side	0.230	0.027	0.122	0.094	0.352	0.324	0.257	0.378	0.351	0.378
	Top Side	0.378	0.012	0.044	0.134	0.422	0.512	0.390	0.434	0.524	0.524
	Bottom Side	1.099	0.000	0.000	0.000	1.099	1.099	1.099	1.099	1.099	1.099
Body-worn SAR (10mm)	Front Side	0.458	0.019	0.107	0.101	0.565	0.559	0.477	0.584	0.577	0.584
	Back Side	1.175	0.025	0.119	0.129	1.295	1.305	1.200	1.320	1.329	1.329

Conclusion:

According to the above tables, the sum of reported SAR values is<1.6W/kg. So the simultaneous transmission SAR with volume scans is not required.

15.SAR Test Result

15.1 SAR Result

Table 15.1-1: SAR Values for GSM850

Test Position	Power Reduction	Mode	Channel	Frequency (MHz)	Measured power (dBm)	Tune-up (dBm)	Power Drift (dB)	Limit of 1gSAR 1.6 W/kg (mW/g)			Figure No.
								Measured SAR1g	Scaling Factor	Report SAR1g	
Head SAR											
Left Touch	Normal power	Speech	190	836.6	31.61	32.00	-0.08	0.534	1.09	0.584	/
Left Tilt 15°	Normal power	Speech	190	836.6	31.61	32.00	0.01	0.363	1.09	0.397	/
Right Touch	Normal power	Speech	190	836.6	31.61	32.00	0.03	0.721	1.09	0.789	/
Right Tilt 15°	Normal power	Speech	190	836.6	31.61	32.00	0.11	0.443	1.09	0.485	/
Right Touch	Normal power	Speech	128	824.2	31.49	32.00	0.00	0.592	1.12	0.666	/
Right Touch	Normal power	Speech	251	848.8	31.37	32.00	0.03	**0.892**	1.16	**1.031**	**A.1**
Head SAR-Repeat											
Right Touch	Normal power	Speech	251	848.8	31.37	32.00	0.08	0.891	1.16	1.030	/
Head SAR-SIM2											
Right Touch	Normal power	Speech	251	848.8	31.37	32.00	-0.03	0.858	1.16	0.992	/
Head SAR-Secondary Supply											
Right Touch	Normal power	Speech	251	848.8	31.37	32.00	-0.06	0.821	1.16	0.949	/
Hotspot SAR (10mm)											
Front Side	Normal power	GPRS 2TS	190	836.6	29.86	30.50	-0.10	0.155	1.16	0.180	/
Back Side	Normal power	GPRS 2TS	190	836.6	29.86	30.50	-0.02	**0.210**	1.16	**0.243**	**A.2**
Left Side	Normal power	GPRS 2TS	190	836.6	29.86	30.50	0.09	0.168	1.16	0.195	/
Right Side	Normal power	GPRS 2TS	190	836.6	29.86	30.50	0.03	0.074	1.16	0.086	/
Top Side	Normal power	GPRS 2TS	190	836.6	29.86	30.50	0.06	0.195	1.16	0.226	/
Body-worn SAR (10mm)											
Front Side	Normal power	GPRS 2TS	190	836.6	29.86	30.50	-0.10	0.155	1.16	0.180	/
Back Side	Normal power	GPRS 2TS	190	836.6	29.86	30.50	-0.02	0.210	1.16	0.243	/

Table 15.1-2: SAR Values for GSM1900

Test Position	Power Reduction	Mode	Channel	Frequency (MHz)	Measured power (dBm)	Tune-up (dBm)	Power Drift (dB)	Limit of 1gSAR 1.6 W/kg (mW/g)			Figure No.
								Measured SAR1g	Scaling Factor	Report SAR1g	
Head SAR											
Left Touch	Normal power	Speech	661	1880	28.95	30.00	-0.03	**0.068**	1.27	**0.087**	**A.3**
Left Tilt 15°	Normal power	Speech	661	1880	28.95	30.00	0.04	0.039	1.27	0.050	/
Right Touch	Normal power	Speech	661	1880	28.95	30.00	0.04	0.056	1.27	0.072	/
Right Tilt 15°	Normal power	Speech	661	1880	28.95	30.00	-0.18	0.043	1.27	0.055	/
Hotspot SAR (10mm)											
Front Side	Normal power	GPRS 4TS	661	1880	24.91	26.00	-0.03	0.257	1.29	0.330	/
Back Side	Normal power	GPRS 4TS	661	1880	24.91	26.00	-0.05	0.623	1.29	0.801	/
Left Side	Normal power	GPRS 4TS	661	1880	24.91	26.00	0.01	0.200	1.29	0.257	/
Right Side	Normal power	GPRS 4TS	661	1880	24.91	26.00	0.10	0.055	1.29	0.071	/
Bottom Side	Normal power	GPRS 4TS	661	1880	24.91	26.00	0.06	0.552	1.29	0.709	/
Back Side	Normal power	GPRS 4TS	512	1850.2	24.70	26.00	-0.06	0.606	1.35	0.817	/
Back Side	Normal power	GPRS 4TS	810	1909.8	24.85	26.00	-0.03	**0.678**	1.30	**0.884**	**A.4**
Body-worn SAR (10mm)											
Front Side	Normal power	GPRS 4TS	661	1880	24.91	26.00	-0.03	0.257	1.29	0.330	/
Back Side	Normal power	GPRS 4TS	661	1880	24.91	26.00	-0.05	0.623	1.29	0.801	/
Back Side	Normal power	GPRS 4TS	512	1850.2	24.70	26.00	-0.06	0.606	1.35	0.817	/
Back Side	Normal power	GPRS 4TS	810	1909.8	24.85	26.00	-0.03	0.678	1.30	0.884	/

Table 15.1-3: SAR Values for WCDMA Band Ⅱ

Test Position	Power Reduction	Mode	Channel	Frequency (MHz)	Measured power (dBm)	Tune-up (dBm)	Power Drift (dB)	Limit of 1gSAR 1.6 W/kg (mW/g)			Figure No.
								Measured SAR1g	Scaling Factor	Report SAR1g	
Head SAR											
Left Touch	Normal power	RMC12.2k	9400	1880	23.81	24.50	0.03	**0.122**	1.17	**0.143**	**A.5**
Left Tilt 15°	Normal power	RMC12.2k	9400	1880	23.81	24.50	-0.06	0.092	1.17	0.108	/
Right Touch	Normal power	RMC12.2k	9400	1880	23.81	24.50	-0.06	0.117	1.17	0.137	/
Right Tilt 15°	Normal power	RMC12.2k	9400	1880	23.81	24.50	-0.08	0.102	1.17	0.120	/
Hotspot SAR (10mm)											
Front Side	Low power	RMC12.2k	9400	1880	21.82	22.50	-0.02	0.320	1.17	0.374	/
Back Side	Low power	RMC12.2k	9400	1880	21.82	22.50	-0.07	0.753	1.17	0.881	/
Left Side	Low power	RMC12.2k	9400	1880	21.82	22.50	0.00	0.217	1.17	0.254	/
Right Side	Low power	RMC12.2k	9400	1880	21.82	22.50	-0.11	0.067	1.17	0.078	/
Bottom Side	Low power	RMC12.2k	9400	1880	21.82	22.50	-0.02	0.774	1.17	0.905	/
Back Side	Low power	RMC12.2k	9262	1852.4	21.67	22.50	-0.07	0.661	1.21	0.800	/
Back Side	Low power	RMC12.3k	9538	1907.6	21.91	22.50	-0.04	0.817	1.15	0.936	/
Bottom Side	Low power	RMC12.2k	9262	1852.4	21.67	22.50	0.08	0.657	1.21	0.795	/
Bottom Side	Low power	RMC12.3k	9538	1907.6	21.91	22.50	0.08	**0.872**	1.15	**0.999**	**A.6**
Hotspot SAR (10mm)-Repeat											
Bottom Side	Low power	RMC12.3k	9538	1907.6	21.91	22.50	0.05	0.842	1.15	0.965	/
Body-worn SAR (10mm)											
Front Side	Low power	RMC12.2k	9400	1880	21.82	22.50	-0.02	0.320	1.17	0.374	/
Back Side	Low power	RMC12.2k	9400	1880	21.82	22.50	-0.07	0.753	1.17	0.881	/
Back Side	Low power	RMC12.2k	9262	1852.4	21.67	22.50	-0.07	0.661	1.21	0.800	/
Back Side	Low power	RMC12.3k	9538	1907.6	21.91	22.50	-0.04	0.817	1.15	0.936	/

Table 15.1-4: SAR Values for WCDMA Band Ⅴ

Test Position	Power Reduction	Mode	Channel	Frequency (MHz)	Measured power (dBm)	Tune-up (dBm)	Power Drift (dB)	Limit of 1gSAR 1.6 W/kg (mW/g)			Figure No.
								Measured SAR1g	Scaling Factor	Report SAR1g	
Head SAR											
Left Touch	Normal power	RMC12.2k	4183	836.6	22.60	23.50	-0.03	0.640	1.23	0.787	/
Left Tilt 15°	Normal power	RMC12.2k	4183	836.6	22.60	23.50	0.00	0.573	1.23	0.705	/
Right Touch	Normal power	RMC12.2k	4183	836.6	22.60	23.50	-0.05	0.835	1.23	1.027	/
Right Tilt 15°	Normal power	RMC12.2k	4183	836.6	22.60	23.50	-0.07	0.681	1.23	0.838	/
Right Touch	Normal power	RMC12.2k	4132	826.4	22.80	23.50	0.04	**0.877**	1.17	**1.030**	**A.7**
Right Touch	Normal power	RMC12.2k	4233	846.6	22.58	23.50	0.03	0.807	1.24	0.997	/
Right Tilt 15°	Normal power	RMC12.2k	4132	826.4	22.80	23.50	-0.04	0.664	1.17	0.780	/
Right Tilt 15°	Normal power	RMC12.2k	4233	846.6	22.58	23.50	0.05	0.630	1.24	0.779	/
Head SAR-Repeat											
Right Touch	Normal power	RMC12.2k	4132	826.4	22.80	23.50	-0.09	0.876	1.17	1.029	/
Hotspot SAR (10mm)											
Front Side	Normal power	RMC12.2k	4183	836.6	22.60	23.50	0.01	0.268	1.23	0.330	/
Back Side	Normal power	RMC12.2k	4183	836.6	22.60	23.50	-0.03	0.297	1.23	0.365	/
Left Side	Normal power	RMC12.2k	4183	836.6	22.60	23.50	-0.03	**0.336**	1.23	**0.413**	**A.8**
Right Side	Normal power	RMC12.2k	4183	836.6	22.60	23.50	0.13	0.187	1.23	0.230	/
Top Side	Normal power	RMC12.2k	4183	836.6	22.60	23.50	0.03	0.307	1.23	0.378	/
Body-worn SAR (10mm)											
Front Side	Normal power	RMC12.2k	4183	836.6	22.60	23.50	0.01	0.268	1.23	0.330	/
Back Side	Normal power	RMC12.2k	4183	836.6	22.60	23.50	-0.03	0.297	1.23	0.365	/

Table 15.1-5: SAR Values for LTE B2

Test Position	Power Reduction	Mode				Channel	Frequency (MHz)	Measured power (dBm)	Tune-up (dBm)	Power Drift (dB)	Limit of 1gSAR 1.6 W/kg (mW/g)			Figure No.
		Modulation	BW(MHz)	RB Allocation	RB Offset						Measured SAR1g	Scaling Factor	Report SAR1g	
Head SAR														
Left Touch	Normal power	QPSK	20	1	mid	18900	1880	22.99	24.00	-0.16	0.099	1.26	0.125	/
Left Tilt 15°	Normal power	QPSK	20	1	mid	18900	1880	22.99	24.00	-0.02	0.046	1.26	0.058	/
Right Touch	Normal power	QPSK	20	1	mid	18900	1880	22.99	24.00	0.03	0.065	1.26	0.082	/
Right Tilt 15°	Normal power	QPSK	20	1	mid	18900	1880	22.99	24.00	0.02	0.050	1.26	0.063	/
Left Touch	Normal power	QPSK	20	50%	high	18900	1880	21.97	23.00	0.10	**0.100**	1.27	**0.127**	**A.9**
Left Tilt 15°	Normal power	QPSK	20	50%	high	18900	1880	21.97	23.00	-0.02	0.047	1.27	0.059	/
Right Touch	Normal power	QPSK	20	50%	high	18900	1880	21.97	23.00	0.01	0.068	1.27	0.086	/
Right Tilt 15°	Normal power	QPSK	20	50%	high	18900	1880	21.97	23.00	-0.17	0.023	1.27	0.029	/
Hotspot SAR (10mm)														
Front Side	Low power	QPSK	20	1	mid	18900	1880	20.14	21.00	-0.06	0.203	1.22	0.247	/
Back Side	Low power	QPSK	20	1	mid	18900	1880	20.14	21.00	-0.03	0.629	1.22	0.767	/
Left Side	Low power	QPSK	20	1	mid	18900	1880	20.14	21.00	-0.04	0.164	1.22	0.200	/
Right Side	Low power	QPSK	20	1	mid	18900	1880	20.14	21.00	-0.06	0.042	1.22	0.051	/
Bottom Side	Low power	QPSK	20	1	mid	18900	1880	20.14	21.00	-0.17	**0.647**	1.22	**0.789**	**A.10**
Front Side	Low power	QPSK	20	50%	high	18900	1880	20.08	21.00	-0.17	0.200	1.24	0.247	/
Back Side	Low power	QPSK	20	50%	high	18900	1880	20.08	21.00	-0.06	0.613	1.24	0.758	/
Left Side	Low power	QPSK	20	50%	high	18900	1880	20.08	21.00	0.09	0.163	1.24	0.201	/
Right Side	Low power	QPSK	20	50%	high	18900	1880	20.08	21.00	0.01	0.067	1.24	0.083	/
Bottom Side	Low power	QPSK	20	50%	high	18900	1880	20.08	21.00	0.18	0.579	1.24	0.716	/
Body-worn SAR (10mm)														
Front Side	Low power	QPSK	20	1	mid	18900	1880	20.14	21.00	-0.06	0.203	1.22	0.247	/
Back Side	Low power	QPSK	20	1	mid	18900	1880	20.14	21.00	-0.03	0.629	1.22	0.767	/
Front Side	Low power	QPSK	20	50%	high	18900	1880	20.08	21.00	-0.17	0.200	1.24	0.247	/
Back Side	Low power	QPSK	20	50%	high	18900	1880	20.08	21.00	-0.06	0.613	1.24	0.758	/

Table 15.1-6: SAR Values for LTE B4

Test Position	Power Reduction	Mode				Channel	Frequency (MHz)	Measured power (dBm)	Tune-up (dBm)	Power Drift (dB)	Limit of 1gSAR 1.6 W/kg (mW/g)			Figure No.
		Modulation	BW(MHz)	RB Allocation	RB Offset						Measured SAR1g	Scaling Factor	Report SAR1g	
Head SAR														
Left Touch	Normal power	QPSK	20	1	mid	20175	1732.5	22.93	23.50	0.01	**0.251**	1.14	**0.286**	**A11**
Left Tilt 15°	Normal power	QPSK	20	1	mid	20175	1732.5	22.93	23.50	0.01	0.039	1.14	0.044	/
Right Touch	Normal power	QPSK	20	1	mid	20175	1732.5	22.93	23.50	0.14	0.102	1.14	0.116	/
Right Tilt 15°	Normal power	QPSK	20	1	mid	20175	1732.5	22.93	23.50	-0.03	0.036	1.14	0.041	/
Left Touch	Normal power	QPSK	20	50%	high	20175	1732.5	21.90	22.50	0.01	0.186	1.15	0.214	/
Left Tilt 15°	Normal power	QPSK	20	50%	high	20175	1732.5	21.90	22.50	0.03	0.035	1.15	0.040	/
Right Touch	Normal power	QPSK	20	50%	high	20175	1732.5	21.90	22.50	0.01	0.128	1.15	0.147	/
Right Tilt 15°	Normal power	QPSK	20	50%	high	20175	1732.5	21.90	22.50	0.07	0.034	1.15	0.039	/
Hotspot SAR (10mm)														
Front Side	Low power	QPSK	20	1	mid	20175	1732.5	20.36	21.50	-0.13	0.246	1.30	0.320	/
Back Side	Low power	QPSK	20	1	mid	20175	1732.5	20.36	21.50	-0.03	**0.904**	1.30	**1.175**	**A12**
Left Side	Low power	QPSK	20	1	mid	20175	1732.5	20.36	21.50	0.13	0.172	1.30	0.224	/
Right Side	Low power	QPSK	20	1	mid	20175	1732.5	20.36	21.50	0.06	0.040	1.30	0.052	/
Bottom Side	Low power	QPSK	20	1	mid	20175	1732.5	20.36	21.50	-0.02	0.835	1.30	1.086	/
Front Side	Low power	QPSK	20	50%	high	20175	1732.5	20.15	21.50	-0.14	0.240	1.36	0.327	/
Back Side	Low power	QPSK	20	50%	high	20175	1732.5	20.15	21.50	0.13	0.859	1.36	1.172	/
Left Side	Low power	QPSK	20	50%	high	20175	1732.5	20.15	21.50	-0.10	0.165	1.36	0.225	/
Right Side	Low power	QPSK	20	50%	high	20175	1732.5	20.15	21.50	-0.04	0.039	1.36	0.053	/
Bottom Side	Low power	QPSK	20	50%	high	20175	1732.5	20.15	21.50	0.14	0.793	1.36	1.082	/
Back Side	Low power	QPSK	20	1	mid	20050	1720	20.16	21.50	-0.03	0.836	1.36	1.138	/
Back Side	Low power	QPSK	20	1	mid	20300	1745	20.27	21.50	-0.17	0.884	1.33	1.173	/
Back Side	Low power	QPSK	20	50%	high	20050	1720	20.14	21.50	-0.09	0.859	1.37	1.175	/
Back Side	Low power	QPSK	20	50%	high	20300	1745	20.10	21.50	-0.06	0.843	1.38	1.164	/
Bottom Side	Low power	QPSK	20	1	mid	20050	1720	20.16	21.50	0.02	0.807	1.36	1.099	/
Bottom Side	Low power	QPSK	20	1	mid	20300	1745	20.27	21.50	0.18	0.792	1.33	1.051	/
Bottom Side	Low power	QPSK	20	50%	high	20050	1720	20.14	21.50	0.18	0.795	1.37	1.087	/
Bottom Side	Low power	QPSK	20	50%	high	20300	1745	20.10	21.50	0.14	0.762	1.38	1.052	/
Hotspot SAR (10mm)-Repeat														
Back Side	Low power	QPSK	20	1	mid	20175	1732.5	20.36	21.50	-0.07	0.900	1.30	1.170	/
Hotspot SAR (10mm)-SIM2														
Back Side	Low power	QPSK	20	1	mid	20175	1732.5	20.36	21.50	0.02	0.865	1.30	1.125	/
Hotspot SAR (10mm)-Headset AA04														
Back Side	Low power	QPSK	20	1	mid	20175	1732.5	20.36	21.50	0.10	0.330	1.30	0.429	/
Hotspot SAR (10mm)-Secondary Supply														
Back Side	Low power	QPSK	20	1	mid	20175	1732.5	20.36	21.50	-0.02	0.902	1.30	1.173	/
Body-worn SAR (10mm)														
Front Side	Low power	QPSK	20	1	mid	20175	1732.5	20.36	21.50	-0.13	0.246	1.30	0.320	/
Back Side	Low power	QPSK	20	1	mid	20175	1732.5	20.36	21.50	-0.03	0.904	1.30	1.175	/
Front Side	Low power	QPSK	20	50%	high	20175	1732.5	20.15	21.50	-0.14	0.240	1.36	0.327	/
Back Side	Low power	QPSK	20	50%	high	20175	1732.5	20.15	21.50	0.13	0.859	1.36	1.172	/
Back Side	Low power	QPSK	20	1	mid	20050	1720	20.16	21.50	-0.03	0.836	1.36	1.138	/
Back Side	Low power	QPSK	20	1	mid	20300	1745	20.27	21.50	-0.17	0.884	1.33	1.173	/
Back Side	Low power	QPSK	20	50%	high	20050	1720	20.14	21.50	-0.09	0.859	1.37	1.175	/
Back Side	Low power	QPSK	20	50%	high	20300	1745	20.10	21.50	-0.06	0.843	1.38	1.164	/
Body-worn SAR (10mm)-Repeat														
Back Side	Low power	QPSK	20	1	mid	20050	1720	20.36	21.50	-0.07	0.900	1.30	1.170	/

Table 15.1-7: SAR Values for LTE B5

Test Position	Power Reduction	Mode				Channel	Frequency (MHz)	Measured power (dBm)	Tune-up (dBm)	Power Drift (dB)	Limit of 1gSAR 1.6 W/kg (mW/g)			Figure No.
		Modulation	BW(MHz)	RB Allocation	RB Offset						Measured SAR1g	Scaling Factor	Report SAR1g	
Head SAR														
Left Touch	Normal power	QPSK	10	1	mid	20525	836.5	21.71	22.00	-0.04	0.654	1.07	0.699	/
Left Tilt 15°	Normal power	QPSK	10	1	mid	20525	836.5	21.71	22.00	0.04	0.581	1.07	0.621	/
Right Touch	Normal power	QPSK	10	1	mid	20525	836.5	21.71	22.00	0.00	0.894	1.07	0.956	/
Right Tilt 15°	Normal power	QPSK	10	1	mid	20525	836.5	21.71	22.00	0.02	0.605	1.07	0.647	/
Left Touch	Normal power	QPSK	10	50%	high	20525	836.5	20.69	21.00	0.04	0.512	1.07	0.550	/
Left Tilt 15°	Normal power	QPSK	10	50%	high	20525	836.5	20.69	21.00	0.03	0.447	1.07	0.480	/
Right Touch	Normal power	QPSK	10	50%	high	20525	836.5	20.69	21.00	0.02	0.698	1.07	0.750	/
Right Tilt 15°	Normal power	QPSK	10	50%	high	20525	836.5	20.69	21.00	-0.01	0.475	1.07	0.510	/
Right Touch	Normal power	QPSK	10	1	mid	20450	829	21.68	22.00	-0.07	**0.945**	1.08	**1.017**	**A.13**
Right Touch	Normal power	QPSK	10	1	mid	20600	844	21.55	22.00	0.01	0.847	1.11	0.939	/
Head SAR-Repeat														
Right Touch	Normal power	QPSK	10	1	mid	20450	829	21.68	22.00	-0.04	0.893	1.08	0.961	/
Hotspot SAR (10mm)														
Front Side	Normal power	QPSK	10	1	mid	20525	836.5	21.71	22.00	0.06	0.222	1.07	0.237	/
Back Side	Normal power	QPSK	10	1	mid	20525	836.5	21.71	22.00	-0.04	0.329	1.07	0.352	/
Left Side	Normal power	QPSK	10	1	mid	20525	836.5	21.71	22.00	-0.03	**0.409**	1.07	**0.437**	**A.14**
Right Side	Normal power	QPSK	10	1	mid	20525	836.5	21.71	22.00	0.11	0.201	1.07	0.215	/
Top Side	Normal power	QPSK	10	1	mid	20525	836.5	21.71	22.00	0.07	0.319	1.07	0.341	/
Front Side	Normal power	QPSK	10	50%	high	20525	836.5	20.69	21.00	-0.02	0.162	1.07	0.174	/
Back Side	Normal power	QPSK	10	50%	high	20525	836.5	20.69	21.00	0.02	0.257	1.07	0.276	/
Left Side	Normal power	QPSK	10	50%	high	20525	836.5	20.69	21.00	0.02	0.318	1.07	0.342	/
Right Side	Normal power	QPSK	10	50%	high	20525	836.5	20.69	21.00	-0.01	0.159	1.07	0.171	/
Top Side	Normal power	QPSK	10	50%	high	20525	836.5	20.69	21.00	0.13	0.250	1.07	0.268	/
Body-worn SAR (10mm)														
Front Side	Normal power	QPSK	10	1	mid	20525	836.5	21.71	22.00	0.06	0.222	1.07	0.237	/
Back Side	Normal power	QPSK	10	1	mid	20525	836.5	21.71	22.00	-0.04	0.329	1.07	0.352	/
Front Side	Normal power	QPSK	10	50%	high	20525	836.5	20.69	21.00	-0.02	0.162	1.07	0.174	/
Back Side	Normal power	QPSK	10	50%	high	20525	836.5	20.69	21.00	0.02	0.257	1.07	0.276	/

Table 15.1-8: SAR Values for LTE B7

Test Position	Power Reduction	Mode				Channel	Frequency (MHz)	Measured power (dBm)	Tune-up (dBm)	Power Drift (dB)	Limit of 1gSAR 1.6 W/kg (mW/g)			Figure No.
		Modulation	BW(MHz)	RB Allocation	RB Offset						Measured SAR1g	Scaling Factor	Report SAR1g	
Head SAR														
Left Touch	Normal power	QPSK	20	1	mid	21100	2535	23.05	24.00	0.03	**0.409**	1.24	**0.509**	**A.15**
Left Tilt 15°	Normal power	QPSK	20	1	mid	21100	2535	23.05	24.00	0.08	0.226	1.24	0.281	/
Right Touch	Normal power	QPSK	20	1	mid	21100	2535	23.05	24.00	-0.09	0.222	1.24	0.276	/
Right Tilt 15°	Normal power	QPSK	20	1	mid	21100	2535	23.05	24.00	0.06	0.223	1.24	0.278	/
Left Touch	Normal power	QPSK	20	50%	high	21100	2535	22.34	23.00	0.07	0.299	1.16	0.348	/
Left Tilt 15°	Normal power	QPSK	20	50%	high	21100	2535	22.34	23.00	0.08	0.197	1.16	0.229	/
Right Touch	Normal power	QPSK	20	50%	high	21100	2535	22.34	23.00	0.13	0.155	1.16	0.180	/
Right Tilt 15°	Normal power	QPSK	20	50%	high	21100	2535	22.34	23.00	-0.03	0.160	1.16	0.186	/
Hotspot SAR (10mm)														
Front Side	Low power	QPSK	20	1	mid	21100	2535	21.62	22.50	-0.09	0.374	1.22	0.458	/
Back Side	Low power	QPSK	20	1	mid	21100	2535	21.62	22.50	-0.09	0.578	1.22	0.708	/
Left Side	Low power	QPSK	20	1	mid	21100	2535	21.62	22.50	-0.04	0.274	1.22	0.336	/
Right Side	Low power	QPSK	20	1	mid	21100	2535	21.62	22.50	0.05	0.087	1.22	0.106	/
Bottom Side	Low power	QPSK	20	1	mid	21100	2535	21.62	22.50	-0.03	0.844	1.22	1.034	/
Front Side	Low power	QPSK	20	50%	high	21100	2535	21.75	22.50	-0.11	0.342	1.19	0.406	/
Back Side	Low power	QPSK	20	50%	high	21100	2535	21.75	22.50	0.07	0.547	1.19	0.650	/
Left Side	Low power	QPSK	20	50%	high	21100	2535	21.75	22.50	-0.05	0.252	1.19	0.300	/
Right Side	Low power	QPSK	20	50%	high	21100	2535	21.75	22.50	0.02	0.071	1.19	0.084	/
Bottom Side	Low power	QPSK	20	50%	high	21100	2535	21.75	22.50	0.12	0.788	1.19	0.937	/
Bottom Side	Low power	QPSK	20	1	mid	20850	2510	21.52	22.50	0.07	**0.846**	1.25	**1.060**	**A.16**
Bottom Side	Low power	QPSK	20	1	mid	21350	2560	21.58	22.50	0.16	0.808	1.24	0.999	/
Bottom Side	Low power	QPSK	20	50%	high	20850	2510	21.58	22.50	0.13	0.815	1.24	1.007	/
Bottom Side	Low power	QPSK	20	50%	high	21350	2560	21.64	22.50	0.19	0.770	1.22	0.939	/
Hotspot SAR (10mm)-Repeat														
Bottom Side	Low power	QPSK	20	1	mid	20850	2510	21.52	22.50	-0.03	0.829	1.25	1.039	/
Body-worn SAR (10mm)														
Front Side	Low power	QPSK	20	1	mid	21100	2535	21.62	22.50	-0.09	0.374	1.22	0.458	/
Back Side	Low power	QPSK	20	1	mid	21100	2535	21.62	22.50	-0.09	0.578	1.22	0.708	/
Front Side	Low power	QPSK	20	50%	high	21100	2535	21.75	22.50	-0.11	0.342	1.19	0.406	/
Back Side	Low power	QPSK	20	50%	high	21100	2535	21.75	22.50	0.07	0.547	1.19	0.650	/