RF TEST REPORT

Applicant	MobiWire SAS
FCC ID	QPN-NEKA
Product	3G Smart Phone
Model	MobiWire Neka, Altice S14
Report No.	R2103A0261-R1
Issue Date	April 22, 2021

TA Technology (Shanghai) Co., Ltd. tested the above equipment in accordance with the requirements in **FCC CFR47 Part 2 (2019)/ FCC CFR 47 Part 22H (2019)**. The test results show that the equipment tested is capable of demonstrating compliance with the requirements as documented in this report.

Prepared by: Peng Tao *Approved by: Kai Xu*

TA Technology (Shanghai) Co., Ltd.

No.145, Jintang Rd, Tangzhen Industry Park, Pudong Shanghai, China

TEL: +86-021-50791141/2/3

FAX: +86-021-50791141/2/3-8000

TABLE OF CONTENT

1. Test Laboratory 4
1.1. Notes of the Test Report 4
1.2. Testing Location 4
2. General Description of Equipment under Test 5
2.1. Applicant and Manufacturer Information 5
2.2. General Information 5
3. Applied Standards 7
4. Test Configuration 8
5. Test Case Results 9
5.1. RF Power Output and Effective Radiated Power 9
5.2. Occupied Bandwidth 12
5.3. Band Edge Compliance 16
5.4. Peak-to-Average Power Ratio (PAPR) 18
5.5. Frequency Stability 20
5.6. Spurious Emissions at Antenna Terminals 23
5.7. Radiates Spurious Emission 27
6. Main Test Instruments 31

This report shall not be reproduced except in full, without the written approval of TA Technology (Shanghai) Co., Ltd.

Summary of measurement results

No.	Test Case	Clause in FCC rules	Verdict
1	RF Power Output and Effective Radiated Power	2.1046 22.913(a)(5)	PASS
2	Occupied Bandwidth	2.1049	PASS
3	Band Edge Compliance	2.1051 / 22.917(a)	PASS
4	Peak-to-Average Power Ratio	22.913(d)/ KDB 971168 D01(5.7)	PASS
5	Frequency Stability	2.1055 / 22.355	PASS
6	Spurious Emissions at Antenna Terminals	2.1051 / 22.917(a)	PASS
7	Radiates Spurious Emission	2.1053 / 22.917 (a)	PASS
Date of Testing: July 10, 2020 ~ August 27, 2020			
Date of Sample Receiving: July 9, 2020			
Note: All indications of Pass/Fail in this report are opinions expressed by TA Technology (Shanghai) Co., Ltd. based on interpretations and/or observations of test results. Measurement Uncertainties were not taken into account and are published for informational purposes only.			

MobiWire Neka, Altice S14 (Report No.: R2103A0261-R1) is a variant model of Mobiwire Neka, Altice S13 (Report No.: R2005A0455-R1V1). Only the software version and model have been updated, and the product has not been changed. Test values duplicated from Original for variant. There is no test for variant in this report.The detailed product change description please refers to the Difference Declaration Letter.

This report shall not be reproduced except in full, without the written approval of TA Technology (Shanghai) Co., Ltd.

1. Test Laboratory

1.1. Notes of the Test Report

This report shall not be reproduced in full or partial, without the written approval of **TA technology (shanghai) co., Ltd.** The results documented in this report apply only to the tested sample, under the conditions and modes of operation as described herein .Measurement Uncertainties were not taken into account and are published for informational purposes only. This report is written to support regulatory compliance of the applicable standards stated above.

1.2. Test facility

FCC (Designation number: CN1179, Test Firm Registration Number: 446626)

TA Technology (Shanghai) Co., Ltd. has been listed on the US Federal Communications Commission list of test facilities recognized to perform electromagnetic emissions measurements.

A2LA (Certificate Number: 3857.01)

TA Technology (Shanghai) Co., Ltd. has been listed by American Association for Laboratory Accreditation to perform electromagnetic emission measurement.

1.3. Testing Location

Company:	TA Technology (Shanghai) Co., Ltd.
Address:	No.145, Jintang Rd, Tangzhen Industry Park, Pudong
City:	Shanghai
Post code:	201201
Country:	P. R. China
Contact:	Xu Kai
Telephone:	+86-021-50791141/2/3
Fax:	+86-021-50791141/2/3-8000
Website:	http://www.ta-shanghai.com
E-mail:	xukai@ta-shanghai.com

This report shall not be reproduced except in full, without the written approval of TA Technology (Shanghai) Co., Ltd.

2. General Description of Equipment under Test

2.3. Applicant and Manufacturer Information

Applicant	MobiWire SAS
Applicant address	79 avenue Francois Arago, 92000 NANTERRE France.
Manufacturer	MobiWire SAS
Manufacturer address	79 avenue Francois Arago, 92000 NANTERRE France.

2.4. General Information

EUT Description			
Model	MobiWire Neka, Altice S14		
IMEI	IMEI 1:353443110003147 IMEI 2:353443110003154		
Hardware Version	V00		
Software Version	Mobiwire_Neka_V01_210303		
Power Supply	Battery/AC adapter		
Antenna Type	Internal Antenna		
Antenna Gain	GSM850:-3dBi WCDMA Band V: -3dBi		
Test Mode(s)	GSM 850; WCDMA Band V		
Test Modulation	(GSM/GPRS)GMSK; (WCDMA) BPSK, QPSK;		
GPRS Multislot Class	12		
EGPRS Multislot Class	12		
HSDPA UE Category	14		
HSUPA UE Category	6		
HSPA+ UE Category	6		
Maximum E.R.P.	GSM 850:	27.45dBm	
	WCDMA Band V:	17.17dBm	
Rated Power Supply Voltage	3.8V		
Extreme Voltage	Minimum: 3.6V Maximum: 4.35V		
Extreme Temperature	Lowest: -10°C Highest: +55°C		
Operating Frequency Range(s)	Band	Tx (MHz)	Rx (MHz)
	GSM850	824 ~ 849	869 ~ 894
	WCDMA Band V	824 ~ 849	869 ~ 894
EUT Accessory			
Adapter	Manufacturer: Dongguan Aohai Technology Co., Ltd Model: A18A-050100U-US2		
Battery	Manufacturer: ZHONGSHAN TIANMAO BATTERY CO.,LTD Model: 178183116		

This report shall not be reproduced except in full, without the written approval of TA Technology (Shanghai) Co., Ltd.

Earphone	Manufacturer: HUIZHOU JUWEI ELECTRONICS CO.,LTD Model: JWEP0957-M01R
USB Cable	Manufacturer: SHENZHEN FKY-QY HARDWARE ELECTRONIC CO.,LTD Model: AM MICRO5P
Note: 1. The EUT is sent from the applicant to TA and the information of the EUT is declared by the applicant.	

This report shall not be reproduced except in full, without the written approval of TA Technology (Shanghai) Co., Ltd.

3. Applied Standards

According to the specifications of the manufacturer, it must comply with the requirements of the following standards:

Test standards:

FCC CFR 47 Part 22H (2019)

ANSI C63.26 (2015)

Reference standard:

FCC CFR47 Part 2 (2019)

KDB 971168 D01 Power Meas License Digital Systems v03r01

This report shall not be reproduced except in full, without the written approval of TA Technology (Shanghai) Co., Ltd.

4. Test Configuration

Radiated measurements are performed by rotating the EUT in three different orthogonal test planes. EUT stand-up position (Z axis), lie-down position (X, Y axis). Receiver antenna polarization (horizontal and vertical), the worst emission was found in position (Z axis, horizontal polarization) and the worst case was recorded.

All mode and data rates and positions were investigated. Subsequently, only the worst case emissions are reported.
The following testing in GSM/WCDMA is set based on the maximum RF Output Power.
Test modes are chosen to be reported as the worst case configuration below:

Test items	**Modes/Modulation**	
	GSM 850	WCDMA Band V
RF Power Output and Effective Radiated power	GSM GPRS	RMC HSDPA/HSUPA
Occupied Bandwidth	GSM GPRS(1Tx slot)	RMC
Band Edge Compliance	GSM GPRS(1Tx slot)	RMC
Peak-to-Average Power Ratio	GSM GPRS(1Tx slot)	RMC
Frequency Stability	GSM GPRS(1Tx slot)	RMC
Spurious Emissions at Antenna Terminals	GSM	RMC
Radiates Spurious Emission	GSM	RMC

This report shall not be reproduced except in full, without the written approval of TA Technology (Shanghai) Co., Ltd.

5. Test Case Results

5.1. RF Power Output and Effective Radiated Power

Ambient condition

Temperature	Relative humidity	Pressure
23°C ~25°C	45%~50%	101.5kPa

Methods of Measurement

During the process of the testing, The EUT is controlled by the Base Station Simulator to ensure max power transmission and proper modulation.

The testing follows FCC KDB 971168 v03r01 Section 5.8 and ANSI C63.26 (2015).

a) Connect the equipment as illustrated. Mount the equipment with the manufacturer specified antenna in a vertical orientation on a manufacturer specified mounting surface located on a non-conducting rotating platform of a RF anechoic chamber (preferred) or a standard radiation site.

b) Key the transmitter, then rotate the EUT 360° azimuthally and record spectrum analyzer power level (LVL) measurements at angular increments that are sufficiently small to permit resolution of all peaks. If a standard radiation test site is used, raise and lower the test antenna to obtain a maximum reading at each angular increment. (Note: several batteries may be needed to offset the effect of battery voltage droop, which should not exceed 5% of the manufactured specified battery voltage during transmission).

c) Replace the transmitter under test with a vertically polarized half-wave dipole (or an antenna whose gain is known relative to an ideal half-wave dipole). The center of the antenna should be at the same location as the center of the antenna under test.

d) Connect the antenna to a signal generator with a known output power and record the path loss (in dB) as LOSS. If a standard radiation test site is used, raise and lower the test antenna to obtain a maximum reading.LOSS = Generator Output Power (dBm) – Analyzer reading (dBm)

e) Determine the effective radiated output power at each angular position from the readings in steps b) and d) using the following equation:ERP (dBm) = LVL (dBm) + LOSS (dB)

f) The maximum ERP is the maximum value determined in the preceding step.

g) When calculating ERP, in addition to knowing the antenna radiation and matching characteristics, it is necessary to know the loss values of all elements (e.g.transmission line attenuation, mismatches, filters, combiners) interposed between the point where transmitter output power is measured, and the point where power is applied to the antenna. ERP can then be calculated as follows:

EIRP (dBm) = Output Power (dBm) - Losses (dB) + Antenna Gain (dBi)

where:dBd refers to gain relative to an ideal dipole.

EIRP (dBm) = ERP (dBm) + 2.15 (dB.)

The RB allocation refers to section 5.1, using the maximum output power configuration.

This report shall not be reproduced except in full, without the written approval of TA Technology (Shanghai) Co., Ltd.

Test Setup

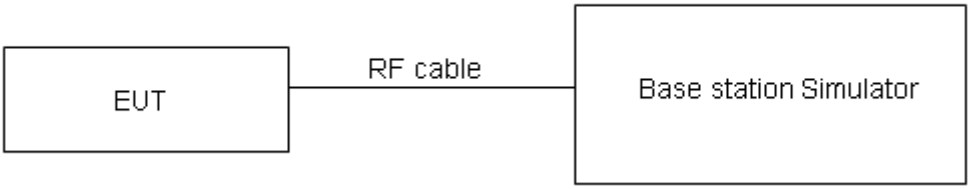

The loss between RF output port of the EUT and the input port of the tester has been taken into consideration.

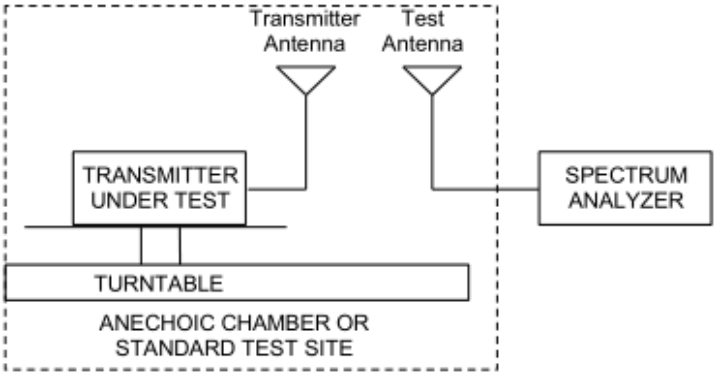

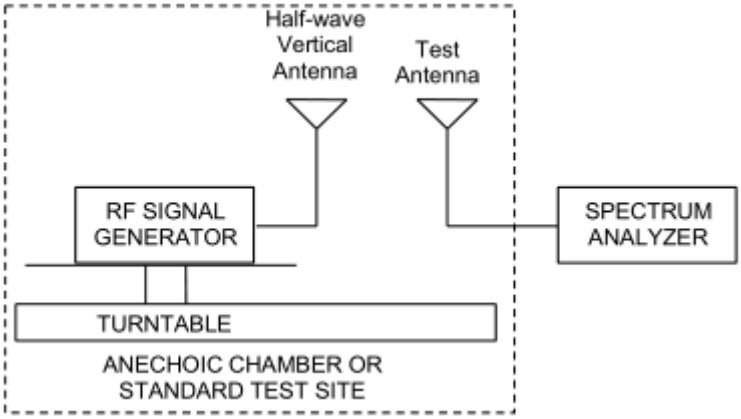

Limits

No specific RF power output requirements in part 2.1046.

Rule Part 22.913(a)(5) specifies that "Mobile/portable stations are limited to 7 watts ERP".

Limit	≤ 7 W (38.45 dBm)

Measurement Uncertainty

The assessed measurement uncertainty to ensure 95% confidence level for the normal distribution is with the coverage factor k = 2, U= 0.4 dB for RF power output, *k* = 2, *U*= 1.19 dB for ERP .

This report shall not be reproduced except in full, without the written approval of TA Technology (Shanghai) Co., Ltd.

Test Results

GSM 850		Output Power (dBm)			ERP (dBm)		
		Channel 128	Channel 190	Channel 251	Channel 128	Channel 190	Channel 251
		824.2 (MHz)	836.6 (MHz)	848.8 (MHz)	824.2 (MHz)	836.6 (MHz)	848.8 (MHz)
GSM(GMSK)	Results	32.60	32.59	32.60	27.45	27.44	27.45
GPRS (GMSK)	1TXslot	32.59	32.61	32.62	27.44	27.46	27.47
	2TXslots	30.77	30.80	30.82	25.62	25.65	25.67
	3TXslots	28.80	28.90	29.02	23.65	23.75	23.87
	4TXslots	28.06	28.25	28.46	22.91	23.10	23.31

WCDMA Band V		Output Power (dBm)			ERP (dBm)		
		Channel 4132	Channel 4183	Channel 4233	Channel 4132	Channel 4183	Channel 4233
		826.4 (MHz)	836.6 (MHz)	846.6 (MHz)	826.4 (MHz)	836.6 (MHz)	846.6 (MHz)
RMC		22.32	22.31	22.30	17.17	17.16	17.15
HSDPA	Sub - Test 1	21.78	21.73	21.74	16.63	16.58	16.59
	Sub - Test 2	21.77	21.75	21.71	16.62	16.60	16.56
	Sub - Test 3	21.24	21.25	21.23	16.09	16.10	16.08
	Sub - Test 4	21.25	21.26	21.21	16.10	16.11	16.06
HSUPA	Sub - Test 1	21.74	21.72	21.69	16.59	16.57	16.54
	Sub - Test 2	20.73	20.70	20.68	15.58	15.55	15.53
	Sub - Test 3	21.20	21.18	21.17	16.05	16.03	16.02
	Sub - Test 4	20.66	20.67	20.65	15.51	15.52	15.50
	Sub - Test 5	21.67	21.65	21.63	16.52	16.50	16.48

This report shall not be reproduced except in full, without the written approval of TA Technology (Shanghai) Co., Ltd.

5.2. Occupied Bandwidth

Ambient condition

Temperature	Relative humidity	Pressure
23°C ~25°C	45%~50%	101.5kPa

Method of Measurement

The EUT was connected to Spectrum Analyzer and Base Station Simulator via power Splitter. The occupied bandwidth is measured using spectrum analyzer.
RBW is set to 3kHz, VBW is set to 10kHz for GSM 850,
RBW is set to 51kHz, VBW is set to 160kHz for WCDMA Band V.
99% power and -26dBc occupied bandwidths are recorded. Spectrum analyzer plots are included on the following pages.

Test Setup

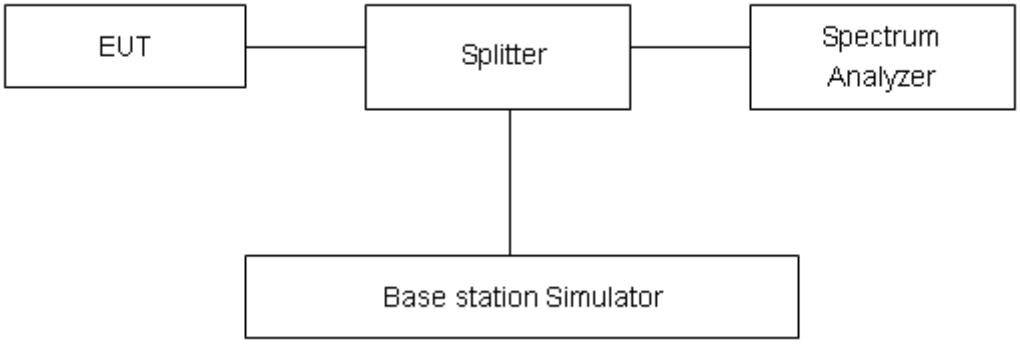

Limits

No specific occupied bandwidth requirements in part 2.1049.

Measurement Uncertainty

The assessed measurement uncertainty to ensure 95% confidence level for the normal distribution is with the coverage factor k = 2, U= 624Hz.

This report shall not be reproduced except in full, without the written approval of TA Technology (Shanghai) Co., Ltd.

Test Result

Mode	Channel	Frequency (MHz)	99% Power Bandwidth (MHz)	-26dBc Bandwidth(MHz)
GSM 850 (GMSK)	128	824.2	0.2470	0.314
	190	836.6	0.2441	0.312
	251	848.8	0.2470	0.312
GPRS 850 (GMSK)	128	824.2	0.2462	0.312
	190	836.6	0.2490	0.310
	251	848.8	0.2459	0.309
WCDMA Band V (RMC)	4132	826.4	4.1538	4.656
	4183	836.6	4.1430	4.621
	4233	846.6	4.1332	4.628

This report shall not be reproduced except in full, without the written approval of TA Technology (Shanghai) Co., Ltd.

GSM 850 CH-Low

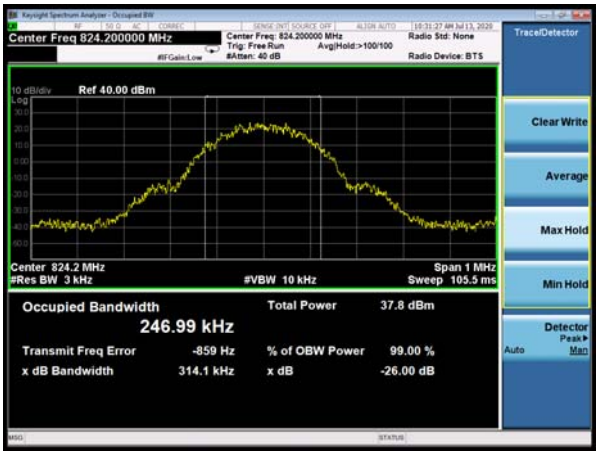

GSM 850 GPRS CH-Low

GSM 850 CH-Middle

GSM 850 GPRS CH-Middle

GSM 850 CH-High

GSM 850 GPRS CH-High

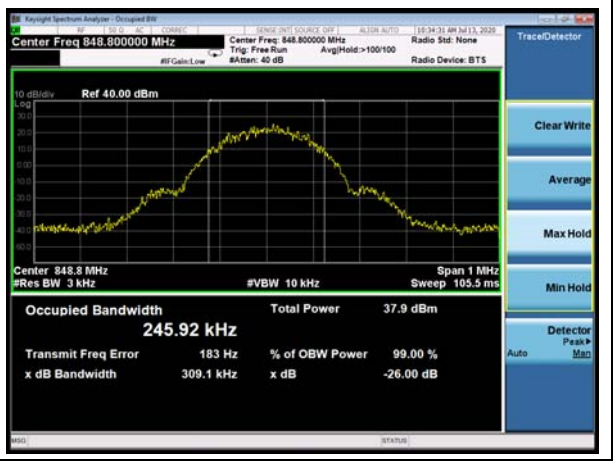

This report shall not be reproduced except in full, without the written approval of TA Technology (Shanghai) Co., Ltd.

WCDMA Band V CH-Low

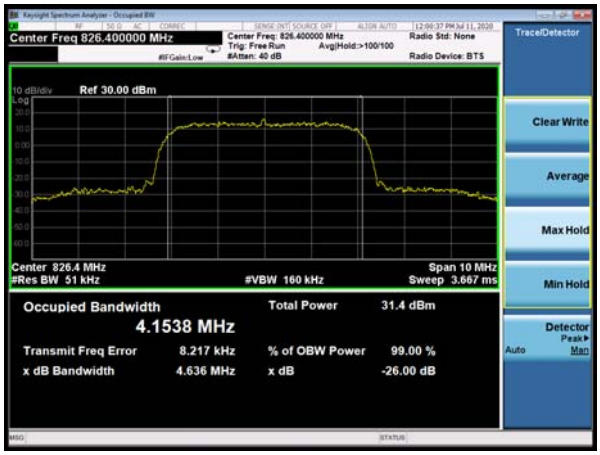

WCDMA Band V CH-Middle

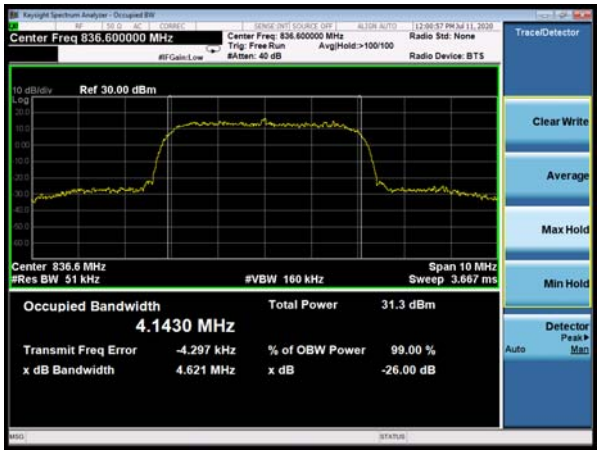

WCDMA Band V CH-High

This report shall not be reproduced except in full, without the written approval of TA Technology (Shanghai) Co., Ltd.

5.3. Band Edge Compliance

Ambient condition

Temperature	Relative humidity	Pressure
23°C ~25°C	45%~50%	101.5kPa

Method of Measurement

The EUT was connected to Spectrum Analyzer and Base Station Simulator via power Splitter. The band edge of the lowest and highest channels were measured. The average detector is used.
RBW is set to 3kHz,VBW is set to 10kHz for GSM 850,
RBW is set to 51kHz,VBW is set to 160kHz for WCDMA Band V.
Spectrum analyzer plots are included on the following pages.

Test Setup

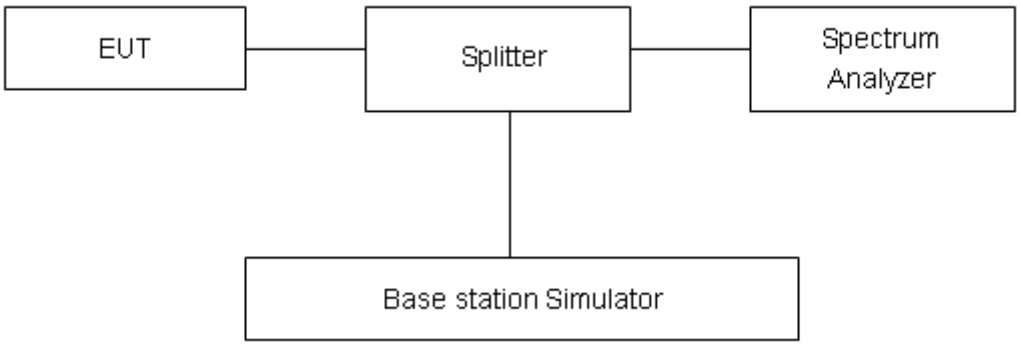

Limits

Rule Part 22.917(a) specifies that “The power of any emission outside of the authorized operating frequency ranges must be attenuated below the transmitting power (P) by a factor of at least 43 + 10 log(P) dB.”

Limit	-13 dBm

Measurement Uncertainty

The assessed measurement uncertainty to ensure 95% confidence level for the normal distribution is with the coverage factor *k* = 1.96, *U*=0.684dB.

This report shall not be reproduced except in full, without the written approval of TA Technology (Shanghai) Co., Ltd.

Test Result:

GSM 850 CH-Low

GSM 850 CH-High

GSM 850 GPRS CH-Low

GSM 850 GPRS CH-High

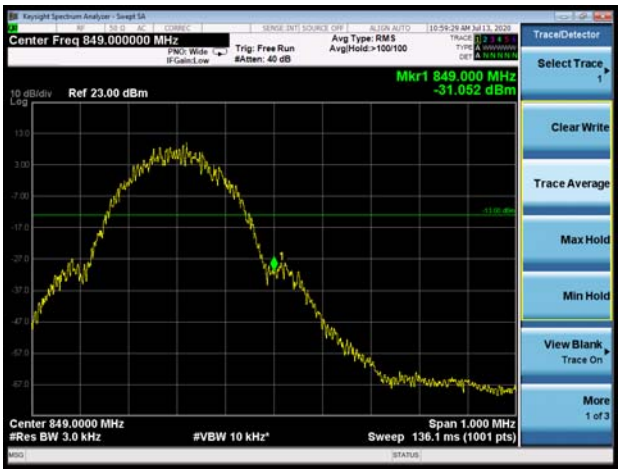

WCDMA Band V CH-Low

WCDMA Band V CH-High

This report shall not be reproduced except in full, without the written approval of TA Technology (Shanghai) Co., Ltd.

5.4. Peak-to-Average Power Ratio (PAPR)

Ambient condition

Temperature	Relative humidity	Pressure
23°C ~25°C	45%~50%	101.5kPa

Methods of Measurement

Measure the total peak power and record as P_{Pk}. And measure the total average power and record as P_{Avg}. Both the peak and average power levels must be expressed in the same logarithmic units (*e.g.*, dBm). Determine the PAPR from:
PAPR (dB) = P_{Pk} (dBm) - P_{Avg} (dBm).

Test Setup

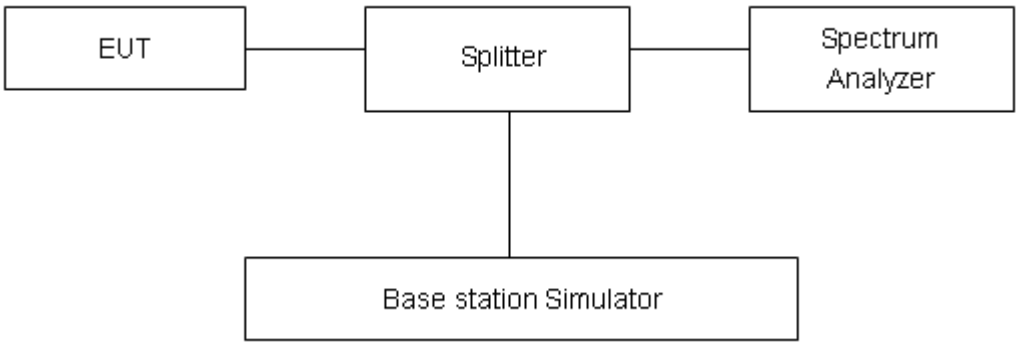

Limits

According to the Sec. 22.913(d), The peak-to-average ratio (PAR) of the transmission must not exceed 13 dB.

Measurement Uncertainty

The assessed measurement uncertainty to ensure 95% confidence level for the normal distribution is with the coverage factor k = 2, U= 0.4 dB.

This report shall not be reproduced except in full, without the written approval of TA Technology (Shanghai) Co., Ltd.

Test Results

Mode	Channel	Frequency (MHz)	Peak (dBm)	Avg (dBm)	PAPR (dB)	Limit (dB)	Conclusion
GSM 850 (GMSK)	128	824.2	33.87	32.60	1.27	≤13	PASS
	190	836.6	33.89	32.59	1.30	≤13	PASS
	251	848.8	33.88	32.60	1.28	≤13	PASS
GPRS 850 (GMSK)	128	824.2	33.85	32.59	1.26	≤13	PASS
	190	836.6	33.86	32.61	1.25	≤13	PASS
	251	848.8	33.90	32.62	1.28	≤13	PASS
WCDMA Band V (RMC)	4132	826.4	25.59	22.48	3.11	≤13	PASS
	4183	836.6	25.46	22.35	3.11	≤13	PASS
	4233	846.6	25.38	22.29	3.09	≤13	PASS

This report shall not be reproduced except in full, without the written approval of TA Technology (Shanghai) Co., Ltd.

5.5. Frequency Stability

Ambient condition

Temperature	Relative humidity	Pressure
23°C ~25°C	45%~50%	101.5kPa

Method of Measurement

Frequency Stability (Temperature Variation)

The temperature inside the climate chamber is varied from -30°C to +55°C in 10°C step size,

(1) With all power removed, the temperature was decreased to 0°C and permitted to stabilize for three hours.

(2) Measure the carrier frequency with the test equipment in a “call mode”. These measurements should be made within 1 minute of powering up the mobile station, to prevent significant self warming.

(3) Repeat the above measurements at 10°C increments from -30°C to +55°C. Allow at least 1.5 hours at each temperature, un-powered, before making measurements. Frequency Stability (Voltage Variation)

The frequency stability shall be measured with variation of primary supply voltage as follows:

(1) Vary primary supply voltage from 85 to 115 percent of the nominal value for other than hand carried battery equipment.

(2) For hand carried, battery powered equipment, reduce primary supply voltage to the battery-operating end point which shall be specified by the manufacturer.

This transceiver is specified to operate with an input voltage of between 3.6 V and 4.35 V, with a nominal voltage of 3.8V.

Test setup

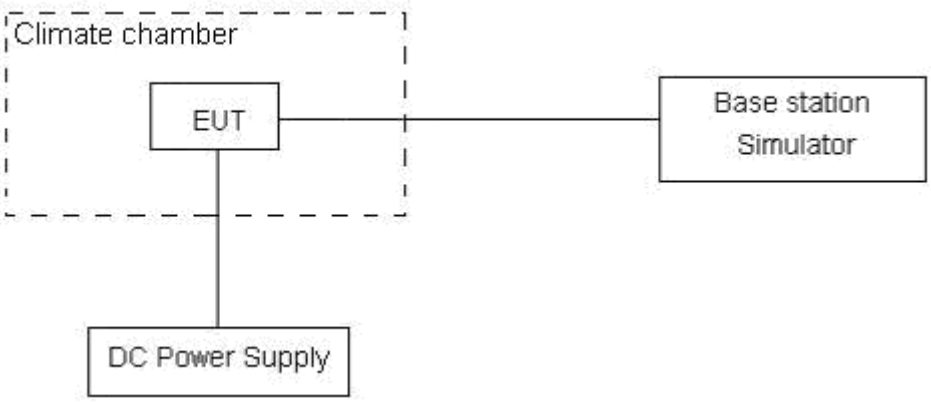

This report shall not be reproduced except in full, without the written approval of TA Technology (Shanghai) Co., Ltd.

Limits

According to the Sec. 22.355, the frequency stability of the carrier shall be accurate to within 2.5 ppm of the received frequency for mobile stations.

Limits	≤ 2.5 ppm

Measurement Uncertainty

The assessed measurement uncertainty to ensure 99.75％ confidence level for the normal distribution is with the coverage factor *k* = 3, *U*= 0.01ppm.

This report shall not be reproduced except in full, without the written approval of TA Technology (Shanghai) Co., Ltd.

Test Result

GSM 850				
Condition		Freq.Error (Hz)	Frequency Stability（ppm）	Verdict
Temperature	Voltage	GMSK	GMSK	
Normal（25℃）	Normal	9.35	0.00497	PASS
Extreme（55℃）		16.57	0.00881	PASS
Extreme（50℃）		10.38	0.00552	PASS
Extreme（40℃）		12.87	0.00685	PASS
Extreme（30℃）		8.93	0.00475	PASS
Extreme（20℃）		7.22	0.00384	PASS
Extreme（10℃）		5.79	0.00308	PASS
Extreme（0℃）		8.88	0.00473	PASS
Extreme（-10℃）		3.52	0.00187	PASS
Extreme（-20℃）		12.34	0.00656	PASS
Extreme（-30℃）		2.83	0.00150	PASS
25℃	LV	9.44	0.00502	PASS
	HV	13.81	0.00734	PASS

WCDMA Band V						
Condition		Freq.Error (Hz)	Freq.Error (Hz)	Frequency Stability（ppm）	Frequency Stability（ppm）	Verdict
Temperature	Voltage	BPSK	QPSK	BPSK	QPSK	
Normal（25℃）	Normal	13.41	8.06	0.00713	0.00429	PASS
Extreme（55℃）		9.99	14.27	0.00532	0.00759	PASS
Extreme（50℃）		12.49	13.69	0.00665	0.00728	PASS
Extreme（40℃）		3.21	11.78	0.00171	0.00626	PASS
Extreme（30℃）		14.47	3.64	0.00770	0.00194	PASS
Extreme（20℃）		1.89	15.80	0.00101	0.00841	PASS
Extreme（10℃）		17.93	3.18	0.00954	0.00169	PASS
Extreme（0℃）		15.73	13.09	0.00837	0.00696	PASS
Extreme（-10℃）		3.87	11.42	0.00206	0.00607	PASS
Extreme（-20℃）		11.61	9.71	0.00618	0.00517	PASS
Extreme（-30℃）		4.84	16.10	0.00257	0.00857	PASS
25℃	LV	7.74	13.17	0.00411	0.00700	PASS
	HV	14.22	6.60	0.00756	0.00351	PASS

This report shall not be reproduced except in full, without the written approval of TA Technology (Shanghai) Co., Ltd.

5.6. Spurious Emissions at Antenna Terminals

Ambient condition

Temperature	Relative humidity	Pressure
23°C ~25°C	45%~50%	101.5kPa

Method of Measurement

The EUT was connected to Spectrum Analyzer and Base Station Simulator via power Splitter. The measurement is carried out using a spectrum analyzer. The spectrum analyzer scans from 9kHz to the 10th harmonic of the carrier.
The peak detector is used. RBW are set to 100 kHz and VBW are set to 300 kHz for below 1G, RBW are set to 1MHz and VBW are set to 3MHz for above 1G, Sweep is set to ATUO.
RBW is set to 1 kHz (0.009MHz~ 0.15 MHz),
RBW is set to 10 kHz (0.15 MHz~ 30 MHz)
RBW is set to 100 kHz (30MHz~1000 MHz)
RBW is set to 1000 kHz (above 1000MHz)
The modulation mode and RB allocation refer to section 5.1, using the maximum output power configuration.

Test setup

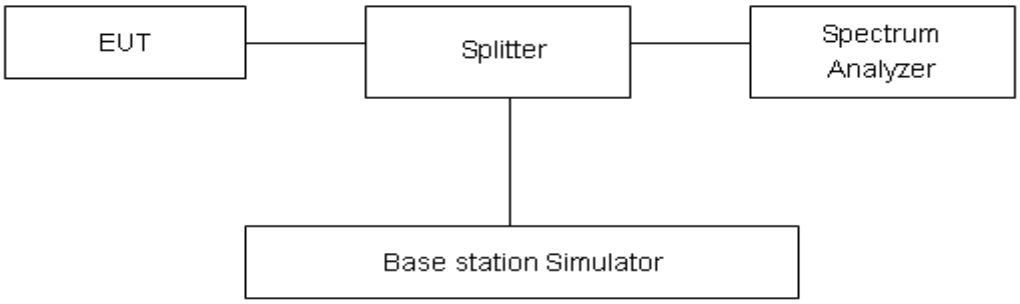

Limits

Rule Part 22.917(a) specifies that “The power of any emission outside of the authorized operating frequency ranges must be attenuated below the transmitting power (P) by a factor of at least 43 + 10 log (P) dB.”

Limit	-13 dBm

Measurement Uncertainty

The assessed measurement uncertainty to ensure 99.75% confidence level for the normal distribution is with the coverage factor *k* = 1.96.

This report shall not be reproduced except in full, without the written approval of TA Technology (Shanghai) Co., Ltd.

Frequency	Uncertainty
9kHz-1GHz	0.684 dB
1GHz-18GHz	1.407 dB

This report shall not be reproduced except in full, without the written approval of TA Technology (Shanghai) Co., Ltd.

Test Result

Sweep the whole frequency band through the range from 9kHz to the 10th harmonic of the carrier, the emissions more than 20 dB below the limit are not reported.

The signal beyond the limit is carrier.

GSM 850 CH-Low 9kHz ~ 9GHz

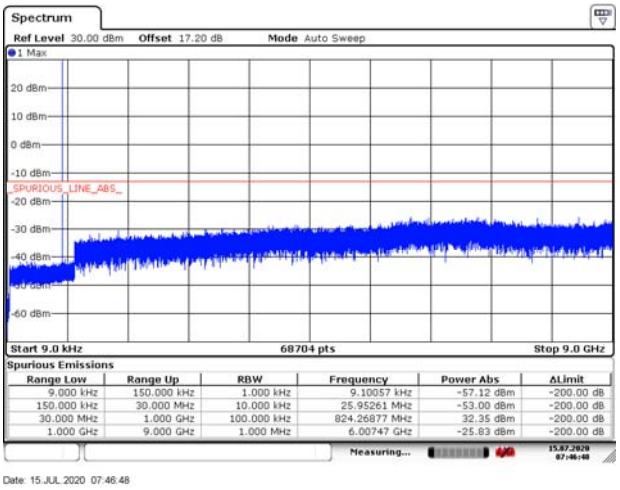

GPRS 850 CH-Low 9kHz ~ 9GHz

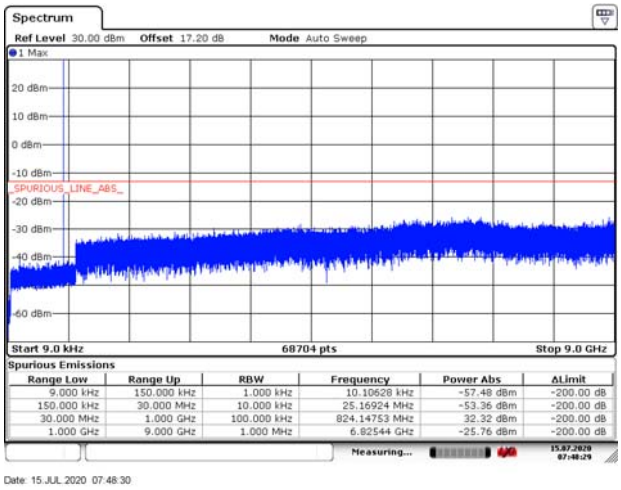

GSM 850 CH-Middle 9kHz ~ 9GHz

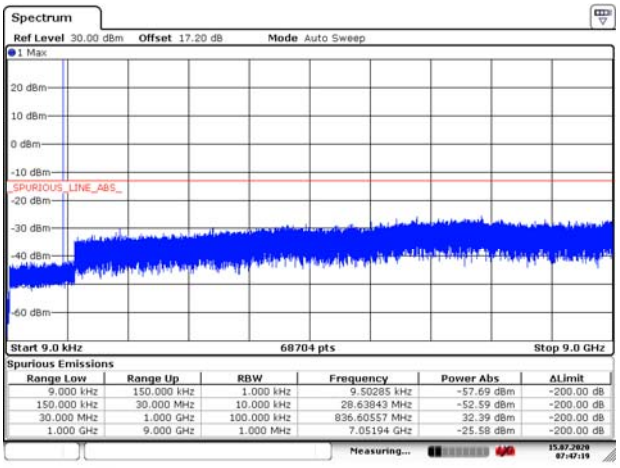

GPRS 850 CH-Middle 9kHz ~ 9GHz

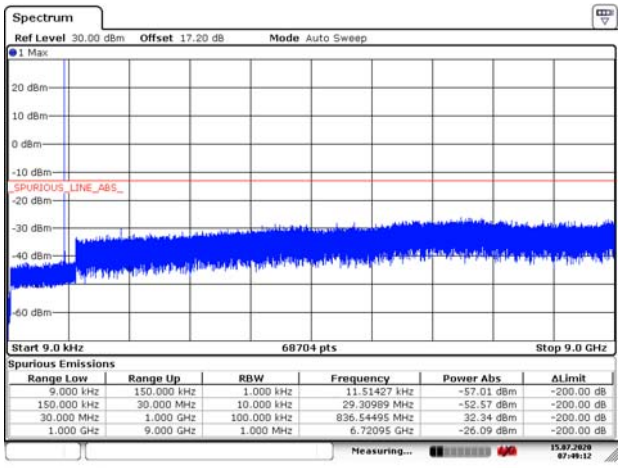

GSM 850 CH-High 9kHz ~ 9GHz

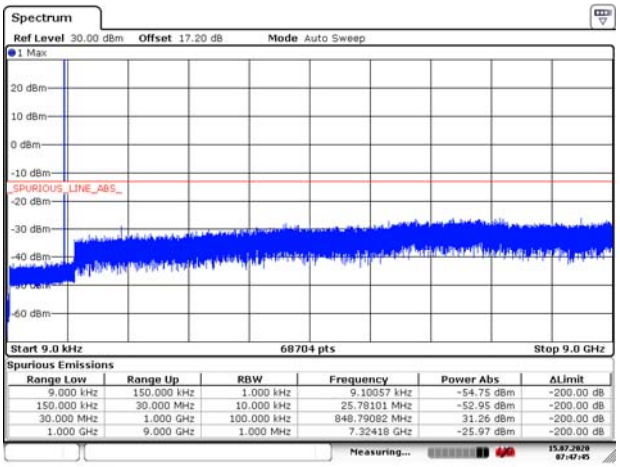

GPRS 850 CH-High 9kHz ~ 9GHz

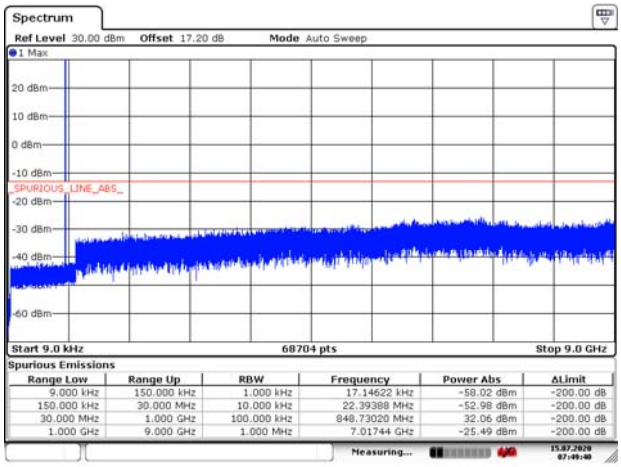

This report shall not be reproduced except in full, without the written approval of TA Technology (Shanghai) Co., Ltd.

WCDMA BAND V CH-Low 9kHz ~ 9GHz

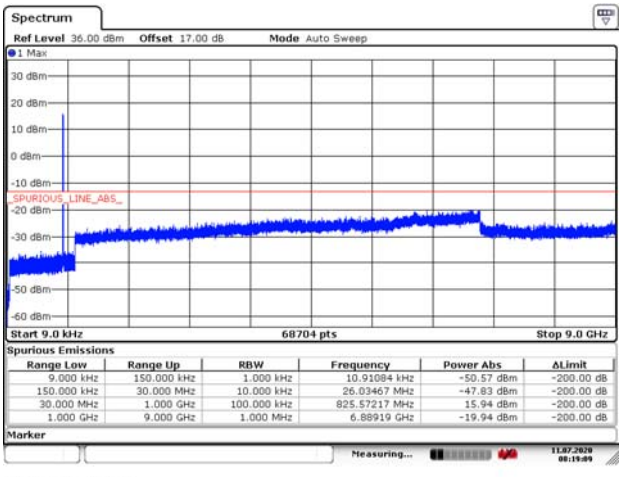

WCDMA BAND V CH-Middle 9kHz ~ 9GHz

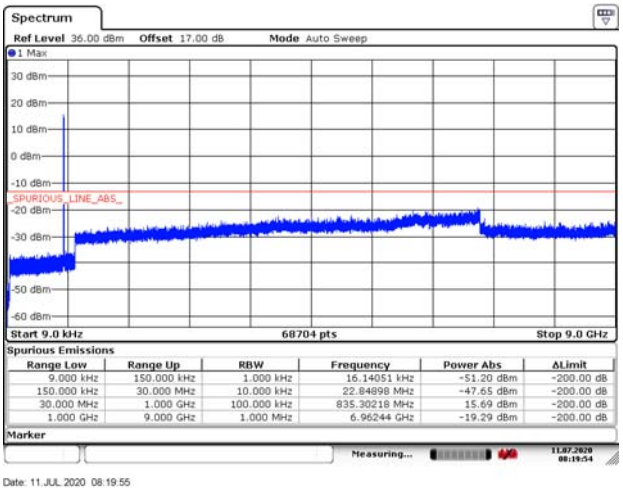

WCDMA BAND V CH-High 9kHz ~ 9GHz

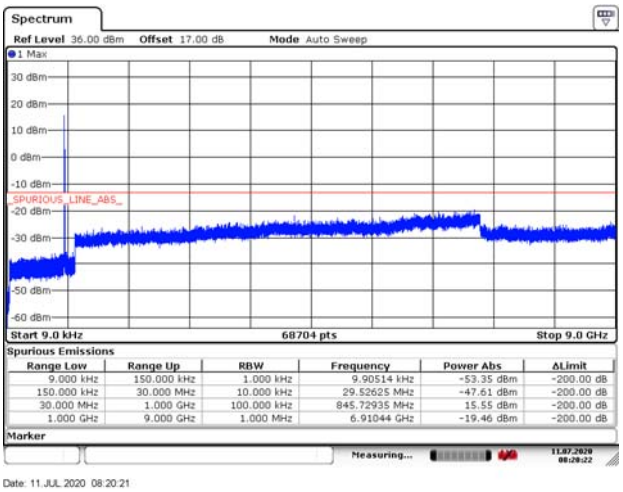

This report shall not be reproduced except in full, without the written approval of TA Technology (Shanghai) Co., Ltd.

5.7. Radiates Spurious Emission

Ambient condition

Temperature	Relative humidity	Pressure
23°C ~25°C	45%~50%	101.5kPa

Method of Measurement

1. The testing follows FCC KDB 971168 v03r01 Section 5.8 and ANSI C63.26 (2015).
2. Below 1GHz: The EUT is placed on a turntable 0.8 meters above the ground in the chamber, 3 meter away from the antenna. The maximal emission value is acquired by adjusting the antenna height, polarisation and turntable azimuth. Normally, the height range of antenna is 1 m to 4 m, the azimuth range of turntable is 0° to 360°, and the receive antenna has two polarizations Vertical (V) and Horizontal (H). Above 1GHz: (Note: the FCC's permission to use 1.5m as an alternative per TCBC Conf call of Dec. 2, 2014.) The EUT is placed on a turntable 1.5 meters above the ground in the chamber, 3 meter away from the antenna. The maximal emission value is acquired by adjusting the antenna height, polarisation and turntable azimuth. Normally, the height range of antenna is 1 m to 4 m, the azimuth range of turntable is 0° to 360°, and the receive antenna has two polarizations Vertical (V) and Horizontal (H).
3. A loop antenna, A log-periodic antenna or horn antenna shall be substituted in place of the EUT. The log-periodic antenna will be driven by a signal generator and the level will be adjusted till the same power value on the spectrum analyzer or receiver. The level of the spurious emissions can be calculated through the level of the signal generator, cable loss, the gain of the substitution antenna and the reading of the spectrum analyzer or receiver.
4. The EUT is then put into continuously transmitting mode at its maximum power level during the test. Set Test Receiver or Spectrum RBW=200Hz,VBW=600Hz for 9kHz150kHz , RBW=10kHz, VBW=30kHz 150kHz-30MHz , RBW=100kHz,VBW=300kHz for 30MHz to 1GHz and RBW=1MHz, VBW=3MHz for above 1GHz, And the maximum value of the receiver should be recorded as (Pr).
5. The EUT shall be replaced by a substitution antenna. In the chamber, an substitution antenna for the frequency band of interest is placed at the reference point of the chamber. An RF Signal source for the frequency band of interest is connected to the substitution antenna with a cable that has been constructed to not interfere with the radiation pattern of the antenna. A power (PMea) is applied to the input of the substitution antenna, and adjust the level of the signal generator output until the value of the receiver reach the previously recorded (Pr). The power of signal source (PMea) is recorded. The test should be performed by rotating the test item and adjusting the receiving antenna polarization.
6. A amplifier should be connected to the Signal Source output port. And the cable should be connect between the Amplifier and the Substitution Antenna. The cable loss (Pcl) ,the Substitution Antenna Gain (Ga) and the Amplifier Gain (PAg) should be recorded after test.
7. The measurement results are obtained as described below:
Power(EIRP)=PMea- PAg - Pcl + Ga
The measurement results are amend as described below:
Power(EIRP)=PMea- Pcl + Ga
8. This value is EIRP since the measurement is calibrated using an antenna of known gain (2.15 dBi)

This report shall not be reproduced except in full, without the written approval of TA Technology (Shanghai) Co., Ltd.

and known input power. ERP can be calculated from EIRP by subtracting the gain of the dipole, ERP = EIRP-2.15dBi.

The modulation mode and RB allocation refer to section 5.1, using the maximum output power configuration.

Test setup

9KHz ~ 30MHz

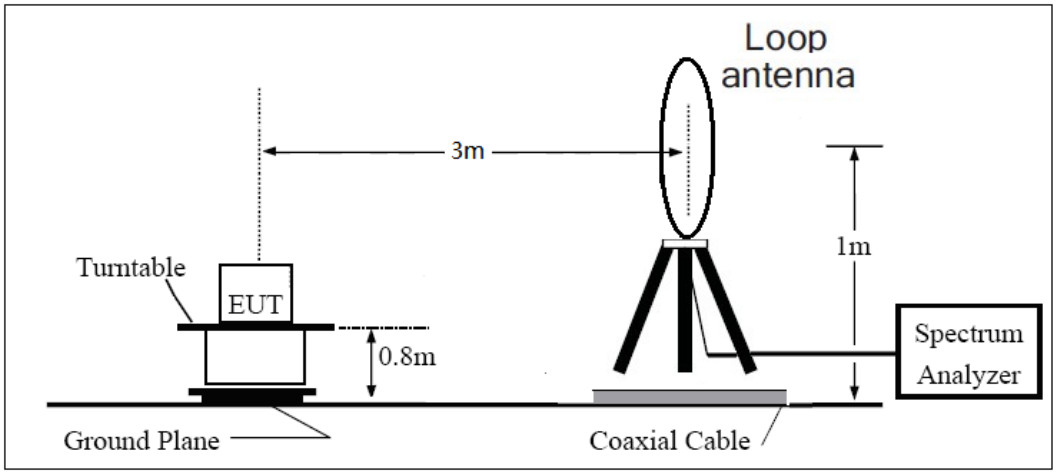

30MHz ~ 1GHz

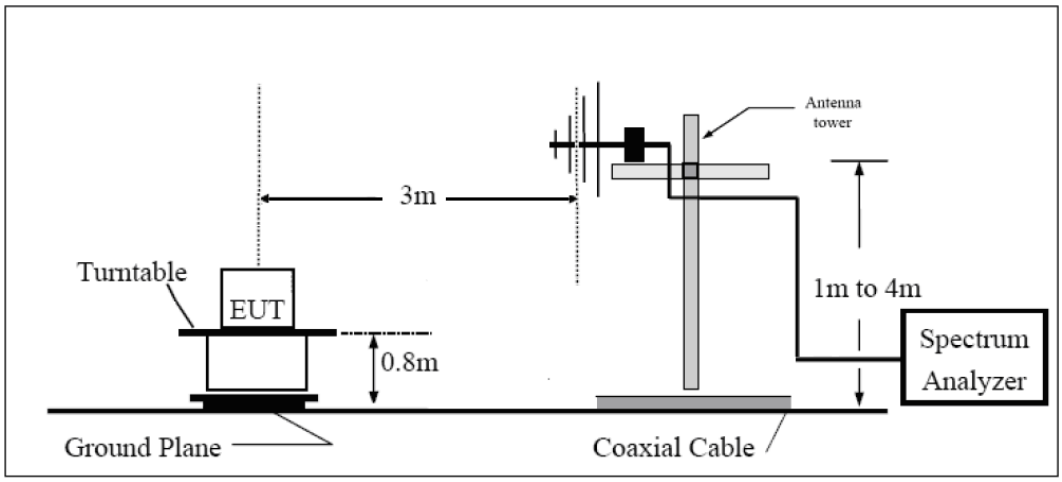

Above 1GHz

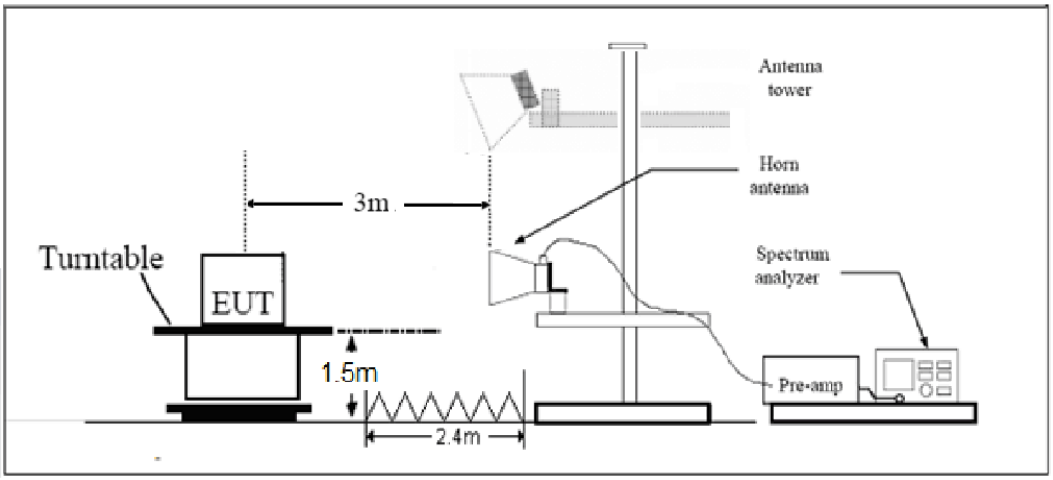

This report shall not be reproduced except in full, without the written approval of TA Technology (Shanghai) Co., Ltd.

Note: Area side:2.4mX3.6m

Limits

Rule Part 22.917(a) specifies that “The power of any emission outside of the authorized operating frequency ranges must be attenuated below the transmitting power (P) by a factor of at least 43 + 10 log (P) dB.”

Limit	-13 dBm

Measurement Uncertainty

The assessed measurement uncertainty to ensure 95％ confidence level for the normal distribution is with the coverage factor *k* = 1.96, *U*= 3.55 dB.

This report shall not be reproduced except in full, without the written approval of TA Technology (Shanghai) Co., Ltd.

Test Result

Sweep the whole frequency band through the range from 9kHz to the 10th harmonic of the carrier, the emissions below the noise floor will not be recorded in the report.

GSM 850 CH-Middle

Harmonic	Frequency (MHz)	SG (dBm)	Cable Loss (dB)	Gain (dBi)	Antenna Polarization	ERP Level (dBm)	Limit (dBm)	Margin (dB)	Azimuth (deg)
2	1673.2	-38.40	2.00	10.75	Horizontal	-31.80	-13.00	18.80	0
3	2509.8	-50.87	2.51	11.05	Horizontal	-44.48	-13.0	31.48	180
4	3346.4	-57.43	4.20	11.15	Horizontal	-52.63	-13.0	39.63	45
5	4183.0	-54.60	5.20	11.15	Horizontal	-50.80	-13.0	37.80	90
6	5019.6	-54.90	5.50	11.95	Horizontal	-50.60	-13.0	37.60	315
7	5856.2	-56.00	5.70	13.55	Horizontal	-50.30	-13.0	37.30	90
8	6692.8	-56.90	6.30	13.75	Horizontal	-51.60	-13.0	38.60	180
9	7529.4	-53.10	6.80	13.85	Horizontal	-48.20	-13.0	35.20	225
10	8366.0	-53.17	6.90	14.25	Horizontal	-47.97	-13.0	34.97	135

Note: 1.The other Spurious RF Radiated emissions level is no more than noise floor.
2.The worst emission was found in the antenna is Horizontal position.

WCDMA Band V CH-Middle

Harmonic	Frequency (MHz)	SG (dBm)	Cable Loss (dB)	Gain (dBi)	Antenna Polarization	ERP Level (dBm)	Limit (dBm)	Margin (dB)	Azimuth (deg)
2	1673.2	-59.46	2.00	10.75	Horizontal	-52.86	-13.0	39.86	135
3	2509.8	-58.49	2.51	11.05	Horizontal	-52.10	-13.0	39.10	315
4	3346.4	-55.24	4.20	11.15	Horizontal	-50.44	-13.0	37.44	225
5	4183.0	-52.63	5.20	11.15	Horizontal	-48.83	-13.0	35.83	135
6	5019.6	-51.90	5.50	11.95	Horizontal	-47.60	-13.0	34.60	225
7	5856.2	-57.19	5.70	13.55	Horizontal	-51.49	-13.0	38.49	90
8	6692.8	-57.00	6.30	13.75	Horizontal	-51.70	-13.0	38.70	0
9	7529.4	-53.29	6.80	13.85	Horizontal	-48.39	-13.0	35.39	45
10	8366.0	-53.10	6.90	14.25	Horizontal	-47.90	-13.00	34.90	315

Note: 1.The other Spurious RF Radiated emissions level is no more than noise floor.
2.The worst emission was found in the antenna is Horizontal position.

This report shall not be reproduced except in full, without the written approval of TA Technology (Shanghai) Co., Ltd.

6. Main Test Instruments

Name	Manufacturer	Type	Serial Number	Calibration Date	Expiration Date
Power Splitter	Hua Xiang	SHX-GF2-2-13	10120101	/	/
Spectrum Analyzer	Key sight	N9010A	MY50210259	2020-05-18	2021-05-17
Universal Radio Communication Tester	Key sight	E5515C	MY48367192	2020-05-27	2021-05-26
Signal Analyzer	R&S	FSV30	100815	2019-12-15	2020-12-14
Loop Antenna	SCHWARZBECK	FMZB1519	1519-047	2020-04-02	2023-04-01
Trilog Antenna	SCHWARZBECK	VUBL 9163	9163-201	2017-11-18	2020-11-17
Horn Antenna	R&S	HF907	102723	2018-08-11	2021-08-10
Horn Antenna	ETS-Lindgren	3160-09	00102643	2018-06-20	2021-06-19
Signal generator	R&S	SMB 100A	102594	2020-05-18	2021-05-17
Climatic Chamber	ESPEC	SU-242	93000506	2017-12-17	2020-12-16
Preampflier	R&S	SCU18	102327	2020-05-18	2021-05-17
MOB COMMS DC SUPPLY	Keysight	66319D	MY43004105	2020-05-18	2021-05-17
RF Cable	Agilent	SMA 15cm	0001	2020-06-12	2020-12-11
Software	R&S	EMC32	9.26.0	/	/

********END OF REPORT ********

This report shall not be reproduced except in full, without the written approval of TA Technology (Shanghai) Co., Ltd.