Handheld

English

EasyGuide

Pocket LOOX T Series

Are there ...

... any technical problems or other questions which you would like help with?

Please contact:

- our Hotline/Help Desk
  (see Help Desk List or the Internet: *www.fujitsu-siemens.com/helpdesk*)
- your sales partner
- your sales office

Further information can be found in the "Safety" and "Warranty" manuals.

The latest information on our products, tips, updates, etc., can be found on our website at:
www.fujitsu-siemens.com

This manual was produced by Xerox Global Services.
Published by
Fujitsu Siemens Computers GmbH

Edition: 1, July 2006

Order No.: **A26391-K182-Z120-1-7619**

Pocket LOOX T Series

EasyGuide

Your Pocket LOOX

Working with files

Important notes

Security functions

Equipment overview

Connecting and networking the Pocket PC with other devices

Getting started

Energy saving functions

Making telephone calls with the Pocket PC

Troubleshooting and tips

Operating the Pocket PC

Technical data

Creating messages

Manufacturer's notes

Using the Internet

Index

Using GPS functions

Using the camera functions (optional)

Edition 1, July 2006

Adobe and Acrobat are trademarks of Adobe systems Incorporated and may be protected in certain countries.

Intel is a registered trademark, XScale is trademark of Intel Corporation, U.S.A.

Microsoft, Windows and ActiveSync are registered trademarks of the Microsoft Corporation.

Windows Mobile is a trademark of Microsoft Corporation.

The SD Logo is a trademark of Secure Digital.

The Bluetooth trademarks are the property of Bluetooth SIG, Inc., U.S.A. licensed for Fujitsu Siemens Computers GmbH.

All other trademarks referenced are trademarks or registered trademarks of their respective owners, whose protected rights are acknowledged.

Copyright © Fujitsu Siemens Computers GmbH 2006

All rights, including rights of translation, reproduction by printing, copying or similar methods, in part or in whole, are reserved.

Offenders will be liable for damages.

All rights reserved, particularly for rights created by patent grant or registration of a utility model or design.

Delivery subject to availability. Right of technical modification reserved.

Contents

Your Pocket LOOX … 1
Notational conventions 2

Important notes 3
Safety notes 3
Using the Pocket PC 4

Equipment overview 5
Indicators (LEDs) and status indicators in the display 6
Using the operating elements 8
Using the keyboard 8
Using the pen and display 11
Using the online buttons for telephony 11
Using the 3-way scroll button and the navigation key 12
Using the application buttons and the softkey buttons 14
Using the on-screen keyboard 16
Software overview 18
Accessories 20
Cradle 20
External GPS antenna (optional) 20

Getting started 21
Checking the delivery contents 21
Removing the protective film from the camera and the screen 21
Installing the battery and the SIM card (optional) 22
Connecting the power adapter and charging the battery 23
Starting up your Pocket PC for the first time 23
Calibrating the screen 24
Entering a PIN (optional) 24
Familiarising yourself with basic operation of the device 24
Internet and intranet connections with CONNECTMOBILITY-E2C 25
Starting CONNECTMOBILITY E2C 25
User data dialogue 25
GPRS/UMTS provider selection 26
Data synchronisation 26
Data synchronisation via Exchange Server 26
Data synchronisation with ActiveSync 27
Using the online help 31

Making telephone calls with the Pocket PC 33
Making a telephone call 33
Answering an incoming call 34
Ending the conversation 34
Displaying missed calls 34
Using the Voice Commander 35
Speed dial function 36
Using the handsfree function 37
Muting the telephone 38
Call holding 38
Making a conference call 39
Making video telephone calls (optional) 40
Managing contacts 42
Copying contact details from the Pocket PC to the SIM card 42

Copying contacts from the SIM card to the Pocket PC 42
Displaying services on the SIM card (network provider specific) 43
SIM security 43
SIM lock 43
Blocking your SIM card 44
Configuring telephone settings 44
Network selection 44
Setting up a mailbox number 45
Setting up the SMS Service Centre 45
Setting up call diversion 46

Operating the Pocket PC 47
Using the profiles of your Pocket PC 47
Selecting profiles 48
Configuring profiles 48
Switching the Pocket PC on and off 48
Switching the Pocket PC off and on during normal use (Standby mode) 49
Pocket PC: switching off to save battery life 50
Resetting the Pocket PC 50
Soft reset (warm start) 50
Cold starting and resetting factory default settings 51
Out and about with the Pocket PC 52
Transporting Pocket PC 52
In-flight usage 52
Usage while driving 52
Cleaning the Pocket PC 53
Charging the battery 54
Inserting and removing an expansion card 57
Inserting the expansion card 57
Removing the expansion card 58
Using the Pocket PC as a USB Host device 59
Configuring device settings 60
Adapting menus 60
Fast access to programs via FSC SpeedMenu 60

Creating messages 61
Inbox 61
SMS messages 62
Creating and sending SMS messages 62
Managing SMS messages on the SIM card 62
MMS messages 63
Configuring the MMS application 63
Creating and sending MMS messages 64
E-mail 65
Setting up e-mail accounts for POP3, SMTP or IMAP4 65
Setting up an e-mail account for the VPN corporate network 65
Setting up e-mail sending via ActiveSync 66
Creating and sending e-mails 66
Downloading e-mails from a server (e-mail pull) 66
Receiving e-mails and other data automatically in real-time (e-mail push) 67

Using the Internet 69
Accessing the Internet with Internet Explorer 69

Using GPS functions 71
FSC GPSLocator 71

Using the camera functions (optional) ... 73
2 megapixel autofocus camera ... 73

Working with files ... 77
Windows Media Player ... 77
ClearVue PDF ... 77
Using Java applications ... 78
Downloading Java applications ... 78
Starting Java applications ... 78
Compressing files with FSC MobileZip ... 79

Security functions ... 81
Password protection ... 82
Device lock (key and display lock) ... 82
FSC KeyLock ... 83
FSC SecureLock ... 83

Connecting and networking the Pocket PC with other devices ... 85
Activating and deactivating radio modules ... 85
Wireless connection via Wireless LAN ... 85
Wireless communication with Bluetooth ... 86
Selecting location for Bluetooth operation ... 86

Energy saving functions ... 87
General information on energy management ... 87
Using energy saving functions ... 87
Configuring standby mode ... 87
Switching off display lighting ... 87
Configuring display lighting ... 88
Configuring key illumination ... 88
Configuring device behaviour when E-mail push is activated ... 88
Switching on the sound and setting the volume ... 88
Using Wireless Manager ... 89

Troubleshooting and tips ... 91
Installing new software ... 91
The Pocket PC’s time or date are not correct ... 91
The display of the Pocket PC remains dark ... 91
The display is difficult to read ... 92
The Pocket PC switches off ... 92
The Pocket PC does not start after being switched on ... 92
The Pocket PC does not respond any more ... 93
The battery discharges too quickly ... 93
The End button does not respond properly ... 93
No sound or minimal volume ... 94
Poor reception via GPS ... 94
Contact with hotline/help desk ... 94
Calling up the IMEI number ... 95
Calling up the UUID ... 95

Technical data ... 97
Pocket PC ... 97
Battery (Li-Ion) ... 98
Power adapter ... 99

Manufacturer’s notes ... 101
Environmental protection ... 101

Disposal and recycling 101
CE marking 102
???Information on exposure/specific absorption rate (SAR)..... 103
FCC Warning Statement for Mobile Phone ???GSM 850 and PCS1900 104
RF Exposure Information (SAR) for Mobile Phone ???GSM 850 and PCS1900..... 104
FCC Warning Statement for WLAN product 105
RF Exposure Information (SAR) for WLAN product..... 105

Index..... 107

Your Pocket LOOX ...

... is the first integrated Pocket PC from Fujitsu Siemens Computers which combines a GSM/UMTS mobile telephone with an innovative and high-performance handheld and a GPS navigation system.

With Bluetooth and wireless LAN you can establish a connection to other devices at the office and away from it without bothersome cables. With your Pocket LOOX, you can for example access the Internet via UMTS/GSM or a Wireless LAN. You can call up both web and WAP pages with the *Internet Explorer*. As well as SMS and MMS messaging, the ergonomic keyboard is also perfect for writing and sending e-mails. Thanks to the e-mail push function, you no longer need to download incoming e-mails yourself anymore – instead, they are automatically and comfortably transferred directly to your Pocket LOOX. Calendars, contacts and tasks are automatically updated.

Depending on equipment level, your Pocket LOOX will have one or two integrated cameras. The VGA camera is used for video telephony via UMTS. With the aid of the 2 megapixel autofocus camera you can take photographs and then view the results on the high-resolution touchscreen. Alternatively, you can also record video sequences.

Microsoft Windows 5.0 Phone Edition also includes the MS Office applications *Microsoft Word*, *Excel* and *PowerPoint*. You can store notes in written form or verbally as with a dictation device. Under *Microsoft Windows 5.0 Phone Edition*, your data will also be preserved if the battery ever becomes discharged.

Install *ActiveSync* on your computer, connect the Pocket LOOX to your computer and you are ready to synchronise your data. In the office you can then effortlessly transfer all your data and newly created documents to your computer.

With the optional USB Host cable you can use your Pocket LOOX as a USB Host device. You can connect different USB devices, such as an external hard disk, to the Pocket PC. Read your favourite book quite comfortably away from home on the display or use the MP3 player.

The following documentation contains additional information on your Pocket PC and the operating system:

- the "Getting Started" poster
- the "Safety" and "Warranty" manuals
- the help function on your Pocket PC
- the files on the Microsoft Getting Started CD (e.g. **.TXT*, **.PDF*)

Notational conventions

The following symbols and fonts used in this manual:

⚠	Pay particular attention to texts marked with this symbol. Failure to observe this warning may endanger your health or safety, destroy the system, or lead to loss of data. The warranty will be invalidated if defects to the Pocket PC are caused as a result of failure to follow the instructions.
i	Indicates important information which is required to use the system properly.
►	Texts which follow this symbol describe steps that must be performed in the order shown.
This font	indicates programme names, commands, or menu items.
"Quotation marks"	indicate names of chapters, data carriers and terms that are being emphasised.

Important notes

This chapter contains safety notes and important information you must observe when using your Pocket PC.

This Pocket PC complies with the relevant safety regulations for data processing equipment. If you have questions as to whether you can set up and operate the Pocket PC in the intended environment, please contact your sales point or our hotline/help desk.

Safety notes

Observe the safety notes in the "Safety" manual and the following safety notes to prevent injuries, damage to your device or data loss.

- During installation and before operating the device, observe the instructions on environmental conditions in "Technical data".
- Connect the mains adapter plug to the mains adapter. The mains adapter plug must never be connected to an electrical outlet without the mains adapter.
- The mains adapter must only be connected to an electrical outlet when the Pocket PC or the cradle is connected to the mains adapter.
- Do not use the mains adapter for other devices.
- When transporting the device on a trip, observe the information in "Out and about with the Pocket PC".
- After resetting the Pocket PC (i.e. after a cold start or resetting the device to the factory defaults) the telephone functions are active. In the process, the WLAN radio component will briefly become active while it is initialised. Please be aware of this if you are in an environment where radio components must not be used (e.g. hospital, aircraft). Bluetooth is not activated after a reset.
- Prolonged use of headphones, especially at very loud volumes, can cause hearing damage.

Using the Pocket PC

Store the Pocket PC in a fully charged state in a dry environment. When storing the device please do not exceed the permissible temperature limits – see "Technical data", section "Pocket PC". The lower the temperature at which the batteries are stored, the lower the rate of self-discharge.

i

Avoid leaving your Pocket PC lying in direct sunlight in a car. The temperature could exceed the permissible temperature in such cases.

To protect the battery, battery charging is interrupted at excessively high temperatures.

Please note that batteries discharge themselves over time. Therefore, recharge the battery of your Pocket PC at regular intervals during the storage period.

Protect your Pocket PC against dirt. Dirt or other contamination can cause contact faults on the connections.

Equipment overview

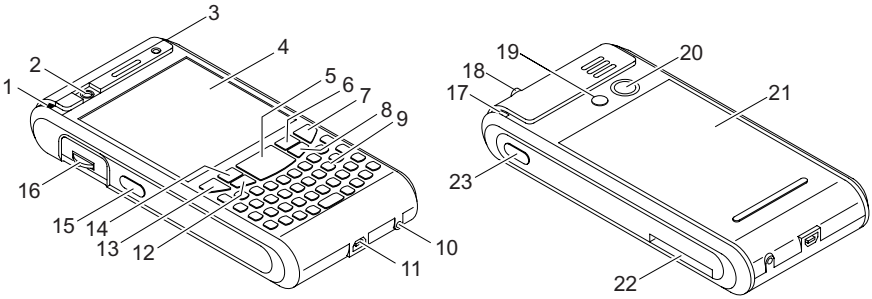

1 = Antenna indicator
2 = VGA camera
3 = Battery/events indicator
4 = Display
5 = Navigation key
6 = Softkey button 2
7 = End button
8 = Application button 2: Inbox
9 = Keyboard with integrated number block
10 = GPS antenna port
11 = Mini USB port
12 = Application button 1: Calendar
13 = Answer button
14 = Softkey button 1
15 = Application button 5: SpeedMenu and camera
16 = 3-way scroll button
17 = Pen slot
18 = Socket for headphones or headset
19 = GSM port
20 = 2 megapixel autofocus camera
21 = Battery compartment
22 = Slot for SD/MMC expansion card
23 = Application button 6: Voice notes

Indicators (LEDs) and status indicators in the display

Your Pocket-PC has two flashing indicators (LEDs) on the casing which light up in different colours, as well as various status indicators in the title bar of the display which will provide you with information about the current status of your device.

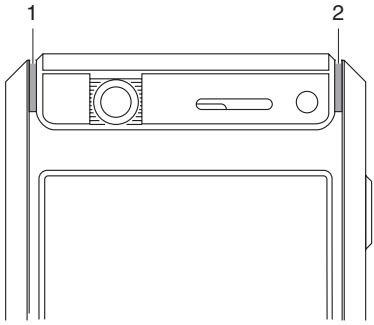

1 = Antenna indicator
2 = Battery/events indicator

Indicators (LEDs)

Indicator	Colour	Indicator state	Meaning
Antenna (1)	Green	Flashing	GPS has been activated.
	Blue	Flashing	Bluetooth is active.
Battery/events (2)	Orange	On	Battery is fully charged.
		Slow flashing	Battery is being charged.
	Red	Quick flashing	Battery is overheated.
	Blue	Slow flashing	New message available, missed call or schedule reminder active.
	Green	Slow flashing	New e-mail waiting.

i

If more than one event occurs at the same time then the LEDs will flash in the relevant colours in turn.

Wenn z. B. For example, if a new e-mail is received while the battery is being charged, the indicator will flash orange and green in turn.

Status indicators on the display

The most important status indicators are shown below:

Status icon	Meaning	Status icon	Meaning
	New e-mail, SMS or MMS		No signal
	Incoming telephone call		GPRS available
	Active telephone call		GPRS active
	Active call via data line		UMTS available
	Call forwarding		Roaming
	Call holding		Synchronisation error
	Missed call(s)		Antenna switched off
	Battery indicator – battery full		All system tones switched on
	Battery low		All system tones switched off
	Battery being charged		WLAN active
	Signal strength		WLAN access point available

Using the operating elements

Your Pocket PC offers various operating elements

- Keyboard with integrated number block
- Pen and display
- Online buttons for telephony
- 3-way scroll button
- Navigation key, application buttons and softkey buttons
- On-screen keypad

Using the keyboard

The keyboard is designed to offer all of the functions of a keyboard with an integrated number block. Some enhanced keyboard functions are accessed via key combinations (short cuts).

i

Lower case letters are output by default.

To obtain a higher case letter, press and hold the corresponding letter button.

Description of buttons

The key buttons on your keyboard are described below together with their functions.

Taste	Funktion
Backspace key	The Backspace key deletes the character to the left of the cursor.
Enter key (return)	**Brief press of the button** The enter key terminates a command line. The command you have entered is executed when you press this key. **Long press of the button** The device lock (key lock and display lock) is set or cancelled, see also "Device lock (key and display lock)".
Shift key	The Shift key causes uppercase characters to appear. In the case of overlay keys, the character printed on the upper left of the key appears when that key is pressed.

FN key	**Brief press of the button** The Fn key enables the special functions indicated on buttons with more than one label (see "Key combinations"). **Long press of the button** Pressing the FN key for longer switches the keyboard illumination on or off. **Double-clicking the button** Engage the FN key to activate or deactivate FN mode.
Tab key	The Tab key moves the cursor to the next tab stop.
Start key	The Start key invokes the Windows Start menu.
OK key	Closes the active window.
Spacebar	Inserts the space character.
Symbol key	**Brief press of the button** Replaces the current character with a related character with an accent, e.g. the letter “a” is changed to “á”. Up to 5 different related characters are available. Pressing the button again switches to the next available related character. **Long press of the button** A window containing all of the available characters is opened or closed (if open).
Asterisk key	**Long press of the button** The Pocket PC is set to Silent Mode, or Silent Mode is deactivated. All tones and the vibration alarm are activated or deactivated.

Key combinations (short cuts)

Key combinations are entered as follows:

► Press and hold the first key in the combination.

► While holding the first key down, press the second key in the combination.

Key combination	Function
FN + navigation key down	Scroll down
FN + navigation key up	Scroll up
FN + navigation key left	Jump to the start of a list or e-mail
FN + navigation key right	Jump to the end of a list or e-mail
FN and Shift	Shift lock
Shift + navigation key left	Decrease display brightness
Shift + navigation key right	Increase display brightness

Application-dependent key-combinations

Key combinations are a useful way of quickly accessing functions in many applications, e.g. your inbox or the *Telephone* function. You can operate the device almost entirely without the pen.

► Press the right-hand softkey button in the application.

A menu showing the available functions is displayed.

► Press the letter which is underlined in the function you wish to execute.

The function is then executed.

Using the pen and display

With the aid of the supplied pen, you can also perform actions by touching the display.

► Briefly touch the desired element on the display with the pen to trigger an action.

► To activate popup menus, again touch the desired element with the pen, but this time leave the pen to rest on the element for a moment. The popup menu appears and you can select an element by touching it.

Using the online buttons for telephony

When you launch the *Telephone* application, a window pops up with the online buttons for telephony:

► Enter the required telephone number by touching the display with the pen.

or

► Enter the required telephone number via the integrated number block on the keyboard.

You can now make a call – see "Making a telephone call".

Using the 3-way scroll button and the navigation key

3-way scroll button

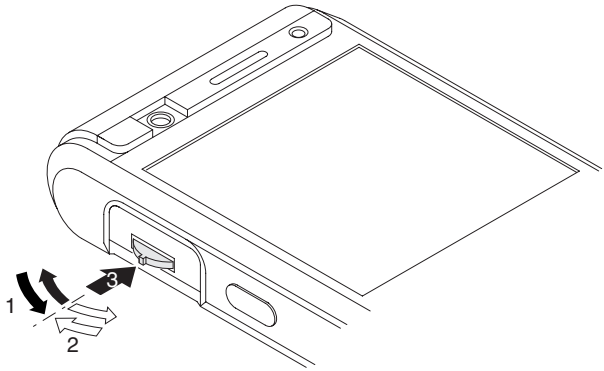

With the scroll button you can scroll up or down and forward or backward (1, 2) within the menu or application. You activate menu entries by pressing the scroll button in the centre position (3).

i

If you are in the *Telephone* application you can use the 3-way scroll button to adjust the telephone volume.

Navigation key

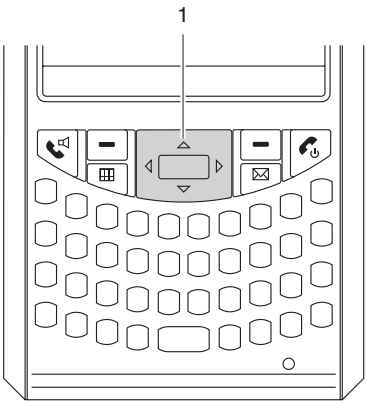

The way in which the navigation key (1) works depends on the application you are in. In some applications you scroll line-by-line up, down, left or right in a menu. To activate menu items press the middle of the navigation key. By contrast, in other applications – e.g. e-mail – you can page up or down with the navigation key.

Using the application buttons and the softkey buttons

With the application buttons and the appropriate presets (see "Configuring the application buttons"), you can open your preferred programs and applications directly from standby mode or from within an application.

As the application buttons react differently to short or long presses you can assign a total of eight different programmes or applications to the application buttons.

In addition, your Pocket PC also has two softkey buttons.

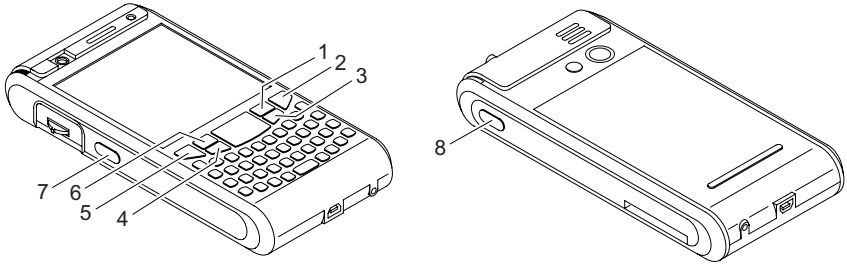

1 = Softkey button 2
2 = End button
3 = Application button 2: Inbox
4 = Application button 1: Calendar
5 = Answer button
6 = Softkey button 1
7 = Application button 5: camera
8 = Application button 6: Voice notes

Key	Allocated function for a short press	Allocated function for a long press
End button	• During an active call: ends the call. • For an incoming call: ignores the call. • In the Today screen: puts the device into Standby mode. • In other applications: changes to the Today screen or to the next active application. • For active data connections: terminates the data connection. A single press of the button terminates a connection (call, data connection) or changes to the next active application. You may need to press the button several times in sequence to get to the Today screen and put the device into Standby mode.	• During a call: ends the call. • Otherwise: the Profiles menu is displayed.
Answer button	• During an active call: call is held. • For an incoming call: the call is answered. • If no call is active: opens the application *Telephone*.	During a call: Activates or deactivates the internal loudspeaker (handsfree mode). Any other connected devices, e.g. BT headset or receiver, are deactivated or activated accordingly. This means that the loudspeaker can be activated even with the headset connected.
Softkey button 1	Depends on the particular application.	
Softkey button 2		
Application Button 1	Calendar	New calendar entry.
Application Button 2	Inbox	Create new mail.
Application Button 5	FSC SpeedMenu or camera application (depending on the device type) In the camera application: • Short press: Operates shutter release. • Short half-press: Autofocus	FSC SpeedMenu or not assigned (depending on the device type)
Application Button 6	Application for creating voice notes (dictation unit)	Create new voice note

Configuring the application buttons

You can also assign other applications or functions to the preselected application buttons.

► Select *Start – Settings – Personal – Buttons*.

► Touch the corresponding button in the selection list with the pen.

► Assign an application or function to the button.

► Confirm with *OK*.

Using the on-screen keyboard

In some applications which allow text input you will see the symbol for the on-screen keyboard in the footer.

You can use the on-screen keyboard in different ways:

Mode	Description
Symbols	Keyboard showing all available symbols and special characters
Keyboard	Standard on-screen keyboard Touch the keys on the keyboard shown on-screen to enter text.
Letter recognizer	Write individual letters, numbers and punctuation marks – they are then converted into typed text.
Block recognizer	Input text as a connected block of text to write letters, numbers, symbols and punctuation marks which are then converted into typed text. Use gestures to input the Enter key and the Backspace key.
Transcriber	Write in cursive handwriting or individual letters – or in a combination of the two – and convert the result into typed text.

Displaying/hiding the on-screen keyboard

► Touch the icon for the on-screen keyboard.

The on-screen keyboard is displayed on the screen.

► Touch the icon for the on-screen keyboard again to close the keyboard.

Changing on-screen keyboard mode

The on-screen keyboard is displayed.

► Click on the arrow next to the on-screen keyboard icon.

A popup window appears with the available modes.

► Select your preferred mode.

i More information about the on-screen keyboard and its different modes can be found in the online help function of your Pocket PC.

Software overview

The following table provides an overview of the most important programs which are already installed on your Pocket PC and where you can find information on using these programs.

Software	Used for	Operating information
Telephone	Telephone application with video telephony functionality	Help file on Pocket PC
Word Mobile	For word processing	Help file on Pocket PC
Excel Mobile	For spreadsheet functions	Help file on Pocket PC
PowerPoint Mobile	For opening and displaying presentations created on a PC	Help file on Pocket PC
Outlook Mobile	Mailbox, calendar, contacts, notes, tasks	Help file on Pocket PC
ActiveSync	For data synchronisation	Help file on the Pocket PC and on the computer on which you installed *ActiveSync*.
Internet Explorer Mobile	Browser for websites and WAP sites	Help file on Pocket PC
Windows Media Player Mobile 10	For playing audio and video files	Help file on Pocket PC
Pocket MSN	• *MSN Messenger* for receiving and sending text messages via the Internet • *MSN Hotmail* for receiving and sending e-mails via an MSN Hotmail account	Help file on Pocket PC
FSC SpeedMenu	Quick start menu for simplifying daily procedures. Adapt the menu to your needs. Support for one-handed operation	Help file on Pocket PC
FSC CONNECTMOBILITY-E2C	Connection manager for efficient management and control of complex Internet and Intranet connections. Automates and minimizes user actions.	Help file on Pocket PC
FSC Voice Recorder	Brings genuine Dictaphone© functionality to the Pocket PC	Help file on Pocket PC
FSC Panning	Experiencing problems when scrolling in *Internet Explorer Mobile*? *FSC Panning* quickly brings window contents into view. Especially useful on large websites.	Help file on Pocket PC
FSC KeyLock	Protects against accidental starting of the Pocket-PC when a key is pressed	Help file on Pocket PC

FSC MobileZip	Open, unpack, create and edit Zip archives	Help file on Pocket PC
FSC Backup (optional)	Data backup and restoration	Help file on Pocket PC
ClearView PDF	Program for displaying files in the PDF format	Help file on Pocket PC
Voice Commander	Control the device with your voice. For telephone calls, calling up information about your contacts and about your programs.	Help file on Pocket PC
GPSLocator	*GPSLocator* illustrates the basic functions of your GPS system	Help file on Pocket PC
SIM Manager	Manages the data on your SIM card	Help file on Pocket PC

Accessories

We offer a range of accessories to make it easier and more convenient to work with your Pocket PC. Information on additional accessories for your Pocket PC can be found on our website at *www.fujitsu-siemens.com/accessories*.

Below you will find a short description of the special accessories for your Pocket PC.

Cradle

With the cradle you can charge the battery in the Pocket PC and/or synchronise data between the Pocket PC and a computer.

External GPS antenna (optional)

With a Pocket PC with integrated GPS, you can connect an external GPS antenna to the underside of the Pocket PC. The external GPS antenna improves performance in difficult reception conditions.

Getting started

It will only take a few moments to have your Pocket PC up and running, ready for use. The steps you will need to work through include:

- Checking the delivery contents
- Removing the protective film from the camera and the screen
- Installing the battery and the SIM card (optional)
- Connecting the power adapter
- Starting up your Pocket PC for the first time
- Calibrating the touchscreen
- Familiarising yourself with basic operation of the device
- Performing initial data synchronisation with ActiveSync or Exchange Server (optional)

More information on these individual steps can be found on the poster “Getting Started” and in the chapters below.

Checking the delivery contents

► Check the contents of your delivery package – use the “Getting Started” poster to make sure nothing is missing.

Removing the protective film from the camera and the screen

The lens of the camera (optional) and the display are covered with a protective film to protect them against scratches.

► Before starting up the Pocket PC, remove the protective films on the lens of the camera and the display.

Installing the battery and the SIM card (optional)

You can use your Pocket PC in two different modes of operation:

- Without a SIM card: no telephony functions available
- With a SIM card: telephony functions are available

The SIM card is provided by the operator of your telephone network. Use of a SIM card is optional. If you choose to use the Pocket PC without a SIM card then the telephony functions will not be available. However, calls to emergency services are also possible without a SIM card.

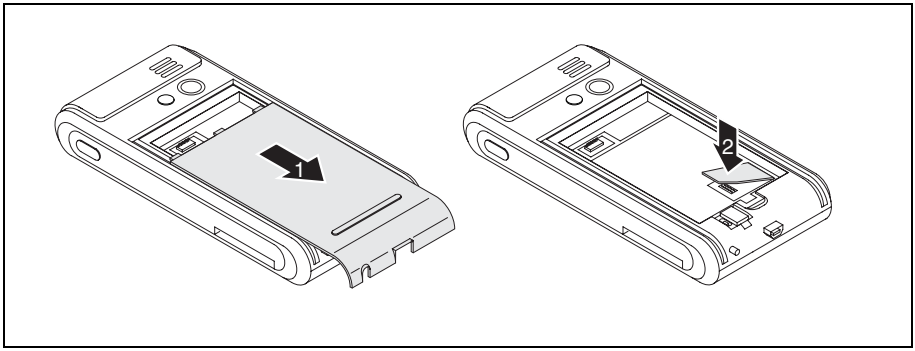

► Slide off the cover from the Pocket PC in the direction of the arrow (1).

► If using a SIM card, insert it in the direction of the arrow into the SIM card slot (2).

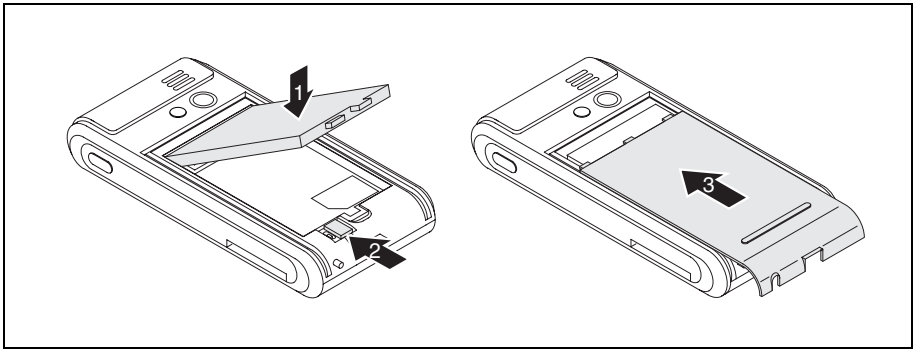

► Insert the battery in the battery compartment (1).

► Slide the battery catch in the direction of the arrow (2).

► Slide the cover back on in the direction of the arrow as far as it will go (3).

i

Your new battery will not be charged when you unpack it. Therefore, before using the device for the first time without a mains power supply you should charge the battery until the corresponding LED indicator stops flashing.

Connecting the power adapter and charging the battery

Please observe the safety information in the "Important notes" chapter.

Information on connecting the mains adapter and charging the battery can be found in "Operating the Pocket PC" in the section "Charging the battery".

Starting up your Pocket PC for the first time

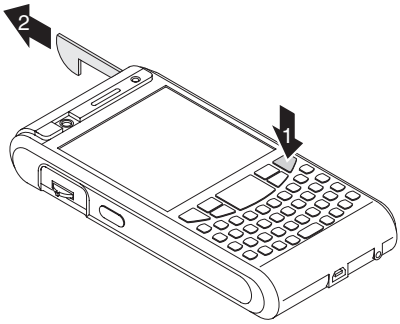

► Press the End button to switch on the Pocket PC (1).

The Pocket PC is switched on.

► Pull out the pen in the direction of the arrow (2).

Calibrating the screen

The display of your Pocket PC is a touchscreen. To ensure that the touchscreen of your Pocket PC reacts correctly when touched with the pen, you will be asked to calibrate the touchscreen after the initial start-up.

► Touch the centre of the cross hairs that appear on the display with the stylus.

► You will need to repeat this procedure several times, whereby the cross hairs will appear at different locations on the display each time.

► Follow the instructions on the display.

Entering a PIN (optional)

If you are using a SIM card you will be asked to enter your PIN once the calibration process is finished.

► Enter your PIN.

Familiarising yourself with basic operation of the device

Next, the operating system provides a brief introduction to the operation of the Pocket PC with the pen after the initial start-up.

► Follow the instructions on the display.

Today screen

Following the introduction the Today screen appears. The Today screen shows all important current information at a glance. From this screen you have access to all programs and to the system settings.

i Please also use the help function available on your Pocket PC if you want to know more about using the programs contained in the operating system.

Internet and intranet connections with CONNECTMOBILITY-E2C

CONNECTMOBILITY-E2C (*E2C* for short) is a tool that enables you to establish a connection to the Internet or to your company's intranet very easily by simply pressing a button.

With a few clicks you can change between your company WLAN, your private WLAN at home or a WLAN hotspot in a cafe or at the airport. You can connect to BT or IrDA via your GPRS-capable telephone without having to think about settings and automatically start your preferred application.

i

If you are using a SIM card from one of the major network operators in Europe then the pre-settings of your network operator will be automatically adopted.

Detailed information on the use of *CONNECTMOBILITY-E2C* can be found in the help file on your Pocket PC.

Starting CONNECTMOBILITY E2C

► Select *Start - Programs - CONNECTMOBILITY E2C*.

CONNECTMOBILITY-E2C is started.

User data dialogue

If additional data are required to establish the connection to the required target network, e.g. GSM, VPN, WLAN WPA PEAP, then they are requested after the "Connect" softkey is pressed - but before the actual connection is established.

The following data may be concerned depending on the type of connection:

- User name
- Password
- Domain
- RSA ID PIN
- RSA ID Token

GPRS/UMTS provider selection

If E2C determines while establishing a connection with a GPRS/UMTS network that you are not in your home country, E2C attempts to read out the home provider of your mobile phone to establish a GPRS/UMTS connection with the related settings. If E2C is unable to read out the home provider of your mobile phone, the dialogue "GPRS/UMTS provider selection" opens. Here you can provide E2C with the missing data required to automatically establish the GPRS/UMTS connection. E2C requires information on the country and the home provider of your mobile phone from you.

Data synchronisation

Two data synchronisation methods are available:

- Exchange Server
- *ActiveSync*

Data synchronisation via Exchange Server

Exchange Server allows you to synchronise data with a server directly via WLAN or GPRS.

Configuring Exchange Server

► Select *Start* - *Programs* - *ActiveSync*.

The *ActiveSync* window appears on the screen.

► Select *Menu – Add Server Source* or *Menu – Configure Server*.

The Server Settings window is then displayed.

► Enter the name of the server on which Exchange Server is running.

► Click on *Next* to confirm.

► Enter the user name, password and domain.

► If necessary click on *Advanced* to make further settings.

► Click on *Next* to confirm.

► Select the data you wish to synchronise via Exchange Server.

► If necessary click on *Settings* to make further settings.

► Click on *Finish* to confirm.

The data are synchronised with Exchange Server.

Synchronising data with Exchange Server

► Select *Start* - *Programs* - *ActiveSync*.

The *ActiveSync* window appears on the screen.

► Select *Synchronize*.

► Enter your password.

The data are synchronised with Exchange Server.

Data synchronisation with ActiveSync

With *ActiveSync* you can synchronise your data on your Pocket PC and your computer (e.g. Outlook data).

You can also use *ActiveSync* to upload new software onto your Pocket PC.

The USB cable and the *ActiveSync* software are provided for data synchronisation. *ActiveSync* is already installed on your Pocket PC. You only need to install *ActiveSync* on your computer.

Installing ActiveSync on your computer

you will find the *ActiveSync* program and the necessary driver on the supplied Microsoft Getting Started CD.

► Insert the Microsoft Getting Started CD in the optical drive of your computer.

The *ActiveSync* installation program will start.

► If the installation program of *ActiveSync* does not start automatically, double-click on the file *Setup.exe* of *ActiveSync*.

► Follow the instructions on the screen.

During the installation the software will attempt to establish a connection to the Pocket PC.

i If you have not yet installed *Outlook* on your computer, you will need to install it on your computer before the first data synchronisation takes place between your Pocket PC and your computer. You will find *Outlook* on the supplied Microsoft Getting Started CD.

Performing a data synchronisation

After you have specified the desired and required settings for synchronisation in the ActiveSync Setup Wizard on your computer, the first synchronisation starts automatically.

You need to copy the data you have processed on your Pocket PC on the road onto your computer so that you can access the latest version of the data there as well. This procedure is conveniently enabled with data synchronisation:

In the *ActiveSync* program you can specify that the latest version of a file is checked and then automatically updated on the respective data carrier - regardless of whether it is the Pocket PC or a computer.

You can synchronise data between your Pocket PC and your computer via the cradle, using a USB cable or via Bluetooth or wireless LAN.

Information about how to synchronise data using *ActiveSync* can be found in the *ActiveSync* help file on your computer.

Connecting your Pocket PC and computer

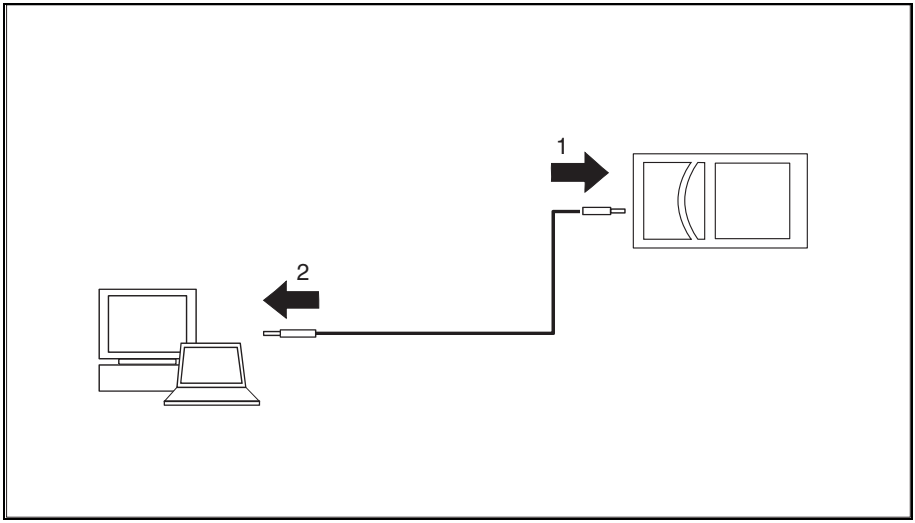

► Switch the computer on.

► Connect the USB cable to your Pocket PC (1) and to one of the USB ports (2) of your computer.

The Pocket PC is now connected to your computer. The ActiveSync partnership is established between your Pocket PC and computer, and the data are synchronised.

i More detailed information about data synchronisation with *ActiveSync* can be found in the help file on your Pocket PC.

Using the cradle

With the cradle you can charge the battery in the Pocket PC and/or synchronise data between the Pocket PC and a computer.

The cradle has two mini USB ports: one port for data synchronisation and one port for the mains adapter.

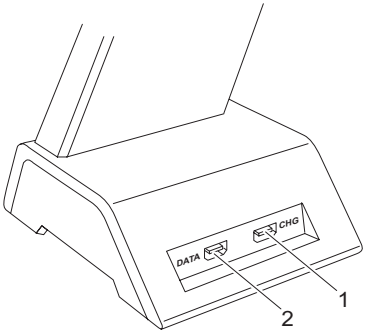

1 = Port for the charging device
2 = Data synchronisation port

Selecting a location for the cradle

Place the cradle on a stable, flat and non-slip surface. In view of the multitude of different finishes used on furniture, it is possible that the rubber feet of the Pocket PC will mark the surface they stand on.

The cradle and the mains adapter should be at least 200 mm apart.

The Pocket PC and the cradle should not be subjected to extreme environmental conditions. Protect the Pocket PC and cradle from dust, moisture and heat.

Using the cradle for data synchronisation

Before the first data synchronisation between your Pocket PC and computer, you will need to install the program *ActiveSync* on your computer (see "Installing ActiveSync on your computer").

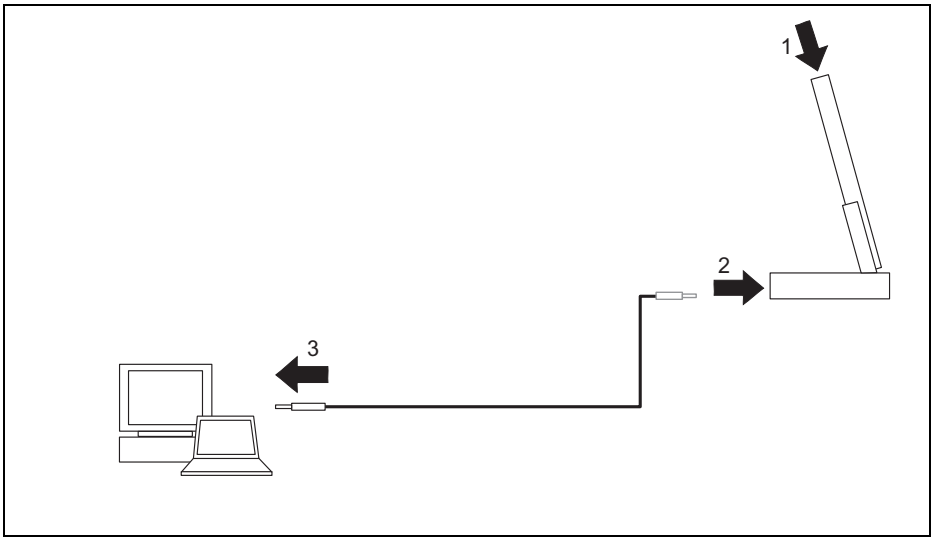

- ► Switch the computer on.
- ► Place the Pocket PC in the cradle (1).
- ► Connect the USB cable to the data synchronisation port of the cradle (2).
- ► Connect the USB cable to one of the USB ports of your computer (3).

The Pocket PC is now connected to your computer. The ActiveSync partnership between your Pocket PC and your computer is established.

- ► If the battery charge level of your Pocket PC is low, you should connect the mains adapter (see "Connecting the power adapter").

More information on data synchronisation can be found in the help file on your Pocket PC.

Using the online help

Your Pocket PC comes with a detailed online help function. You can call up the online help directly or context-sensitively from an application.

Starting the online help independently of an application:

► Click on *Start – Help*.

The Help window opens.

Click on *Contents* to view all of the available help topics.

Alternatively you can click on *Search* to find specific topics.

Starting the online help from an application:

You are in an application.

► Click on *Start – Help*.

A Help window pops up with topics related to the application.

Making telephone calls with the Pocket PC

Your Pocket PC is equipped with all of the functions of a modern mobile telephone. If you have a SIM card from a telephone network operator you can use it. Without a SIM card you will only be able to make calls to the emergency services.

Making a telephone call

The Pocket PC offers you various ways to make telephone calls:

Enter a phone number

You are in the Today screen.

► Enter the required telephone number via the keyboard.

► Press the Answer button.

The connection is established.

Select a phone number from your contacts

► Click on *Start – Contacts*.

You saved contacts are displayed.

► Touch the required contact.

The details for the selected contact are then shown.

► Touch the corresponding telephone number.

► Press the Answer button.

The connection is established.

Select a phone number from your list of calls

► Click on *Start – Telephone*.

The online keyboard for telephony is displayed.

► Touch *Recent Calls.*

The list of recent calls is displayed.

► Touch the corresponding telephone number.

► Press the Answer button.

The connection is established.

Answering an incoming call

On your Pocket PC, incoming calls are signalled by the selected ringtone/vibration alarm and a corresponding display on the screen.

► To answer the call, touch *Answer* on the screen.

or

► Press the Answer button.

i You can also use the *Ignore* option if you would prefer not to answer the incoming call.

Ending the conversation

► Press the End button.

or

► Touch *End* on the display.

Displaying missed calls

Missed calls are indicated by the right-hand indicator flashing blue as well as the word *Note* on the bottom left of the footer.

► Touch *Note* to display the missed call.

or

► Press the left, preselected softkey button.

The number of missed calls is displayed.

► Select *View* to display the caller's telephone number.

or

► Click on *Close* to close the window without having the telephone number displayed.

Using the Voice Commander

With the aid of the Voice Commander speech recognition application you can save a voice identifier for each of your contacts. Once this has been set up, you only need to say the voice identifier in the Voice Commander application and your Pocket PC will automatically dial the telephone number of the contact.

i For best results with the Voice Commander system, we recommend that you assign the Voice Commander application to one of the application keys – see "Configuring the application buttons".

Making a call via Voice Commander

► Select *Start - Programs - Voice Commander*.

Voice Commander is opened. You are prompted to speak a command.

► Say "call <voice identifier>", e.g. "call test", to dial the telephone number of the contact with the corresponding voice identifier.

Once Voice Commander has been able to assign your text to a command you will be asked to confirm it.

► If the command has been correctly recognised say “yes”.

The phone number of the contact is dialled.

i Detailed information on the use of the Voice Commander system can be found in the help file on your Pocket PC.

Speed dial function

You can assign speed dial numbers to up to 99 contacts. These speed dial numbers allow you to dial required telephone numbers more quickly.

Programming the speed dial function

► Click on *Start – Contacts*.

You saved contacts are displayed.

► Touch the required contact.

The details for the selected contact are then shown.

► Select *Menu – Add Speed Dial*.

► Choose an available speed dial number, e.g. "29".

► Confirm with *OK*.

The speed dial number for your contact has now been saved.

Making a call via the speed dial number

► Click on *Start – Telephone*.

The online keyboard for telephony is displayed.

► Enter * plus the speed dial number, e.g. "29".

The contact assigned to this speed dial number is displayed.

► Press the Answer button.

The connection is established.

Using the handsfree function

With the aid of the handsfree function you can make calls via the loudspeaker without having to hold the telephone to your ear. In the process, the loudspeaker volume and the microphone sensitivity are significantly increased.

► Click on *Start – Telephone*.

The online keyboard for telephony is displayed.

► Enter the telephone number with the stylus pen.

► Press the Answer button.

The connection is established.

► Touch *Handsfree*.

or

► Press and hold the Answer button.

The handsfree function is now active, and the loudspeaker is switched on.

► Touch *Handsfree Off* to switch the loudspeaker off again.

or

► Press and hold the Answer button.

Muting the telephone

During a call you can mute the microphone of your Pocket PC to prevent the other person from being able to hear what you or someone else in the room is saying.

► Click on *Start – Telephone*.

The online keyboard for telephony is displayed.

► Enter the telephone number.

► Press the Answer button.

The connection is established.

► Touch *Sound Off*.

The microphone is switched off.

► To switch the microphone back on, touch *Sound On*.

Call holding

This function allows you to put a call on hold without terminating it. In this case the person at the other end of the line will hear music while he or she is on hold. In the mean time you can for example dial a second telephone number and set up a second telephone connection.

► Click on *Start – Telephone*.

The online keyboard for telephony is displayed.

► Enter the telephone number.

► Press the Answer button.

The connection is established.

► Tap *Hold*.

The call is put on hold. While it is on hold, the person at the other end of the line hears music.

► If you would like to set up a second telephone connection, touch the keyboard in the footer and dial the required number.

► To terminate the second call, touch *End*.

► Touch *Alternate Line* to speak to the first person again.

i You can also combine two held calls into a conference call – see "Making a conference call".

Making a conference call

You have established two telephone connections, see "Call holding". You would like to combined these two calls to a conference call.

Setting up a conference call

► Touch *Menu – Conference*.

All connections are combined to a conference call.

Disconnecting all connections from the conference call

► Tap on *End*.

All connections are disconnected.

Disconnecting selected connections

► Touch *Menu – Private*.

All active connections are displayed.

► Tap on the connection you would like to terminate.

► Tap on *End*.

The selected connection is terminated. All other connections remain connected.

Making video telephone calls (optional)

Depending on the equipment level, your Pocket PC is supplied with a camera which enables you to make video telephone calls. Video telephone calls are also possible if the person receiving the call has video functionality without the corresponding camera.

i

Please check with your telephone network operator whether separate activation is required for this service.

GPRS does not support video telephony. Video telephone calls can only be made via a UMTS connection.

The quality of the video telephone call depends largely on the strength of the UMTS network. The video telephone call will be interrupted in the event of network fluctuations.

Answering an incoming video telephone call

On your Pocket PC, incoming video telephone calls are signalled by the selected ringtone/vibration alarm and a corresponding display on the screen.

► To answer the call, touch *Answer* on the screen.

or

► Press the Answer button.

i

You can also use the *Ignore* option if you would prefer not to answer the incoming call.

The video camera on the front of the device is activated, the camera window appears in the display and the connection is established.

► Position yourself in front of the video camera so that your picture is shown clearly on the display of the Pocket PC.

Making a video telephone call

You are logged into a UMTS network.

► Click on *Start – Telephone*.

The *Telephone* application is displayed.

► Enter the required telephone number.

► Select *Video*.

The video camera on the front of the device is activated, the camera window appears in the display and the connection is established.

► Position yourself in front of the video camera so that your picture is shown clearly on the display of the Pocket PC.

Once a connection has been successfully established, the display on the Pocket PC will show the picture of the person you are calling.

Further options for video telephone calls

Further video telephony options are available in the *Telephone* window:

Option	Meaning
	Interrupts the video transmission without terminating the video telephone call.
	Mutes the microphone.
	Switches between the cameras. By default the camera on the front of the device is used for video telephone calls. This function allows you to switch to the 2 megapixel autofocus camera on the back of the device.
	Changes the video settings: • Both video pictures are the same size. • Only the video picture of the person making the call is shown. • Own video image is large, video image of the other person is small. • Own video image is small, video image of the other person is large.
End	Terminates the video telephone call.

Managing contacts

The Pocket PC offers you two ways to save contact details:

- Use the "Contacts" application to save the contact details directly onto your Pocket PC.
- Save the contact details on the SIM card (optional)

With the "Contacts" application, your Pocket PC offers an address book with comprehensive functions. You can save your contact data in a local address book on your Pocket PC.

i Detailed information on the use of the “Contacts” application can be found in the help file on your Pocket PC.

Copying contact details from the Pocket PC to the SIM card

The "Contacts" application also allows you to copy contact data from the local address book of your Pocket PC to your SIM card.

i The "Contacts" application displays both contacts from the local address book and contacts from the currently used SIM card. Contacts on the SIM card are marked with the SIM card symbol.

► Click on *Start – Contacts*.

The contacts are displayed.

► Touch the required contact.

The contact is opened.

► Select the menu *Save to SIM*.

The contact is copied to the SIM card.

Copying contacts from the SIM card to the Pocket PC

With the aid of the SIM Card Manager you can display the contact data on the SIM card and copy them to your Pocket PC.

► Select *Start - Programs - SIM Contacts*.

The SIM Card Manager is opened with the contact data saved on the SIM card.

► Select *Copy now* to transfer the contact data from the SIM card to your Pocket PC.

The contact data are copied across.

Displaying services on the SIM card (network provider specific)

With the aid of the "SIM Toolkit" application you can also display the services, e.g. Info-Services, made available by your telephone network provider with your SIM card.

► Select *Start - Programs - SIM Toolkit*.

The available services are displayed.

i Please contact your telephone network provider for more information about the services available.

SIM security

If you are operating your Pocket PC with a SIM card, the system will ask you to enter your PIN number whenever you switch the telephone function on or off, completely shut down the device or change the battery and/or the SIM card.

However, you can also deactivate the PIN request in the device settings if you would prefer to start up your Pocket PC without being asked for your PIN number:

► Click on *Start – Settings – Telephone*.

► Place a tick next to the option *Switch off PIN request*.

The PIN is no longer requested when the device is started up.

SIM lock

i Depending on your telephone network provider, your Pocket PC may have a SIM lock, i.e. you may not be able to use your device with SIM cards from other network providers.

For more information about how to cancel the SIM lock, please contact your telephone network provider.

Blocking your SIM card

The SIM card is provided by the operator of your telephone network.

i Please contact the operator of your telephone network if your would like to have your SIM card blocked.

Configuring telephone settings

The SIM card for telephony functions is provided by the operator of your telephone network. As a result, the telephone settings depend to a large extent on the functions made available by your telephone network provider.

i Detailed information on the configuration of telephone settings can be found in the help file on your Pocket PC.

Network selection

If you use more than one network you can define one of the networks as your preferred network.

► Click on *Start – Settings – Personal*.

► Select *Telephone*.

The window with the settings for the *Telephone* application is now displayed.

► Select the *Network* tab.

► Select *Find network*.

Your network connections are updated.

► Tap on *Define networks*.

The strongest network is automatically selected.

or

► Under the network selection options select *Manual*.

A list of the available networks is displayed.

► Choose your preferred network.

► Confirm your settings with *OK*.

The network is selected.

Setting up a mailbox number

i The mailbox number is provided by your telephone network provider.

► Select *Start – Settings – Personal – Telephone – Services*.

► In the scroll menu select the entry *Mailbox and SMS*.

► Select *Request settings*.

The settings are read in from the network.

► Enter your mailbox number under *Mailbox*.

► Confirm with *OK*.

The mailbox number is set up.

Setting up the SMS Service Centre

i The number of your SMS Service Centre is provided by your telephone network provider and may already be pre-selected.

► Select *Start – Settings – Personal – Telephone – Services*.

► In the scroll menu select the entry *Mailbox and SMS*.

► Select *Request settings*.

The settings are read in from the network.

► Enter the number of your SMS Service Centre under *SMS Service Number*.

► Confirm with *OK*.

The SMS Service Centre is set up.

Setting up call diversion

With your Pocket PC you can divert incoming calls – e.g. when your device is switched off, or if you are currently using a different telephone, or in case you are already answering another call on the line.

► Select *Start – Settings – Personal – Telephone – Services*.

► Select *Call diversion* in the scroll menu.

► Select *Request settings*.

The settings are read in from the network.

► Enter the desired settings for the call diversion.

► Confirm with *OK*.

Call diversion is set up.

Operating the Pocket PC

This chapter contains descriptions of the operating elements of your Pocket PC as well as information about how to use it.

Please refer to the notes in "Important notes".

Using the profiles of your Pocket PC

Default profiles provide convenient access to frequently used system settings, tailored to the particular way in which you are using the device. With the aid of these profiles you can control power consumption or the radio modules of your device. You can also use profiles to control data behaviour and the acoustic/visual behaviour.

Profile	Description
Standby	The Pocket PC is switched to Standby mode.
Switch off	The Pocket PC is completely switched off.
In-flight mode	All radio modules (telephone, WLAN, Bluetooth) are deactivated. The Pocket-PC is operated as a handheld only.
Direct push	Deactivates or activates the E-mail push function, see "Receiving e-mails and other data automatically in real-time (e-mail push)".
Data connection off	Deactivates all data connections. The telephone functions remain active.
Outside	Mode for loud environments. The volume of acoustic signals is increased.
Meeting mode	Acoustic signals are switched off. Vibration function is active.
Normal mode	The volume of the acoustic signals corresponds to the standard volume of the device.
Maximum power	Mode for high-speed working with comparatively high power consumption.
Maximum battery life	Energy saving mode.
Automatic	The Power Manager determines the optimum power consumption mode and the processor performance. The CPU automatically switches between the power profiles according to the required use.
BT handsfree	Switches the Pocket PC to Bluetooth handsfree (optional).

i

If you would like to switch off the vibration function as well as the system tones, you can activate silent mode by pressing and holding the star key.

Selecting profiles

► From the Today screen, press and hold the End button.

The profiles selection menu is displayed.

► Use the navigation key to select the required profile.

The profile is activated.

► Confirm with the Enter key.

Configuring profiles

► From the Today screen, press and hold the End button.

The profiles selection menu is displayed.

► Use the navigation key to select the required profile.

► Select *Menu - Edit*.

► Enter the settings for the profile and confirm with *OK*.

The new profile settings are saved.

i Detailed information on the configuration of the profiles can be found in the help file on your Pocket PC.

Switching the Pocket PC on and off

The Pocket PC is switched on and off with the End key. After certain applications or the installation of new programs, it may be necessary to restart the Pocket PC with a soft reset. It is only necessary in rare and exceptional cases to reset the Pocket PC to the factory defaults.

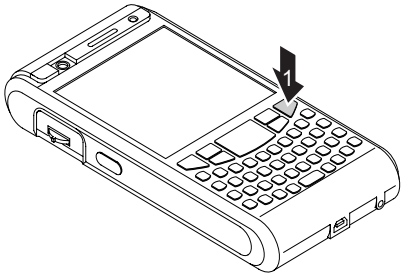

1= End button

Switching the Pocket PC off and on during normal use (Standby mode)

Switching the Pocket PC to Standby mode

► From the Today screen, briefly press the End button.

The Pocket PC is switched to Standby mode.

> **i** If you have specified a switch-off time in the system settings, your Pocket PC will automatically switch to Standby mode after this specified time.

There are two ways to switch on your Pocket PC:

Switching on with the End button

► Briefly press the End button.

► If the device lock is activated, press and hold the Enter button afterwards.

The Pocket PC is switched on.

Switching on with the application buttons

By default, you can also switch your Pocket PC on by briefly pressing one of the application buttons.

► Briefly press any one of the application buttons.

The applications assigned to the respective button appear on the screen.

> **i** With the appropriate setting in *FSC KeyLock* you can prevent the Pocket-PC being started by pressing the application button.
>
> Detailed information about *FSC KeyLock* can be found in the help file on your Pocket PC.

Pocket PC: switching off to save battery life

Switching off

► From the Today screen, press and hold the End button.

The profiles selection menu is displayed.

► Select the profile *Switch off*.

The profile is activated. All programs are closed and the Pocket PC is completely switched off. The power consumption of the Pocket PC is reduced to a minimum.

► To switch the Pocket PC back on again, press and hold the End button.

Resetting the Pocket PC

Soft reset (warm start)

After certain applications or the installation of new programs, it may be necessary to restart the Pocket PC with a soft reset.

Unsaved data will be lost. Shut down all programs before you restart the Pocket-PC.

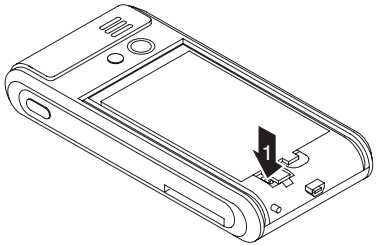

► Slide off the battery cover from the Pocket PC.

► Briefly press the stylus tip into the soft reset opening (1).

The warm boot is carried out.

Cold starting and resetting factory default settings

If your Pocket PC stops working and switching off and on with the End button and the soft reset is unsuccessful, you can perform a cold start with your Pocket PC or reset it to the factory default settings.

Unsaved data will be lost.

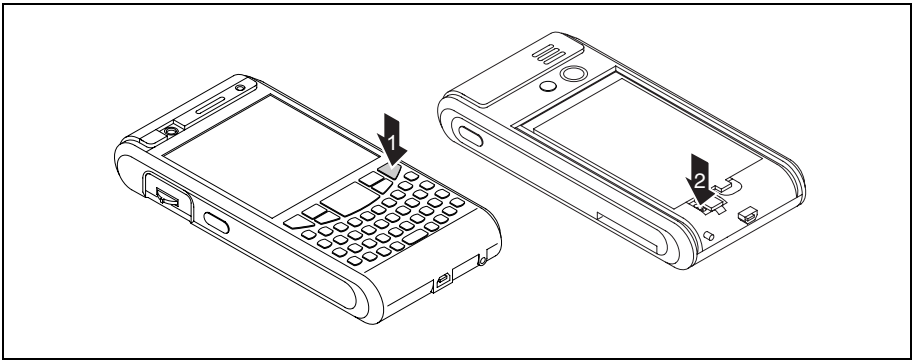

- ► Slide off the battery cover from the Pocket PC.
- ► Briefly remove and then refit the battery.
- ► Wait a few seconds.
- ► At the same time press and hold the End button (1) and press the tip of the stylus pen into the soft reset opening (2).

The display will show a list of available options.

- ► Select *Skip* if you would like to perform a normal cold start.
- ► To restore the Pocket PC to the factory defaults select *Factory Defaults*.

The selected option is performed.

It may take a few minutes for the factory defaults to be restored. At the end an acoustic signal sounds. Please follow the further instructions on the display.

The data memory is deleted when the Pocket PC is restored to its factory defaults. This means: You will lose all data (documents, additionally installed programs, personal settings) that you haven't saved elsewhere. Always back up your data on a regular basis (memory card, *FSC Backup*).

If you have set a password with *FSC SecureLock* then this password will remain.

Out and about with the Pocket PC

Please observe the following information when you are out and about with your Pocket PC.

Transporting Pocket PC

- ► Switch the Pocket PC off.
- ► Disconnect the cables from the Pocket PC.
- ► If the device needs to be shipped, use the original packaging or other suitable packaging to protect it from damage caused by mishandling.
- ► Use a bag for the Pocket PC when transporting it. The bag offers protection against knocks and bumps and is available as an accessory.
- ► In some countries the use of Bluetooth is restricted or completely prohibited. Ask about the regulations in the country you will be travelling in before starting your trip. As a precaution, switch Bluetooth off in case there is any uncertainty at your place of residence.
- ► Protect the Pocket PC from severe shocks and extreme temperatures (e.g., direct sunlight in a car).

If you are travelling abroad, check that the mains adapter can be operated with the local mains voltage. Do not use any other voltage converter!

In-flight usage

- ► If you wish to use your Pocket PC during a flight as a pure handheld without telephony functions, Bluetooth or WLAN, check with the airline first whether and under what conditions this is allowed.
- ► Before embarking on the flight, make sure that you switch off all telephony functions, Bluetooth and WLAN functions. To do this, select the "In-flight mode" profile – see "Using the profiles of your Pocket PC".

Usage while driving

- ► Use a handsfree system, e.g. a handsfree installation in the vehicle or the optional Bluetooth headset, and select the BT handsfree profile before you start driving – see "Using the profiles of your Pocket PC".

Cleaning the Pocket PC

- ► Switch the Pocket PC off.
- ► Pull the power plug out of the mains outlet.

Do not use any cleaning agents that contain abrasives or may corrode plastic.
Please ensure that no liquid enters the Pocket PC.

- ► Clean the surface of the device with a dry cloth.
- ► If it is very dirty, you can clean the device and the display with a damp cloth.

Charging the battery

Your Pocket PC is equipped with a powerful battery. When you're on the road your Pocket PC is supplied with power by the integrated battery.

i The battery is not charged on delivery and should be charged prior to the first mobile use.

You have three ways of recharging the battery:

- You can connect the Pocket PC directly to an electrical outlet with the mains adapter.
- You can connect the cradle to an electrical outlet with the power adapter and insert the Pocket PC into the cradle.
- You can connect the Pocket PC to a computer’s USB port using a USB cable.

You can continue to work with the Pocket PC during charging. This extends the charging time.

i Please read the information about the mains adapter in "Connecting the power adapter" chapter.

Recharging the battery directly via the mains adapter

You can connect the mains adapter directly to the Pocket PC.

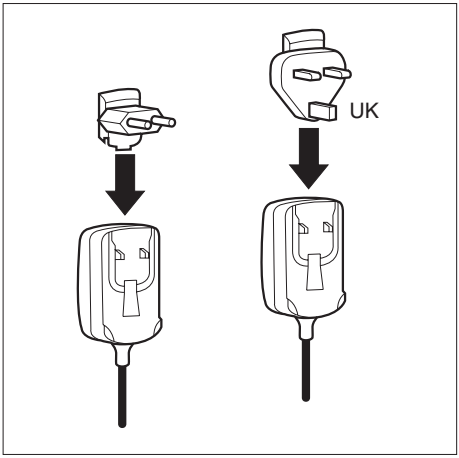

► Slide the suitable mains adapter plug into the mains adapter in the direction of the arrow until it engages.

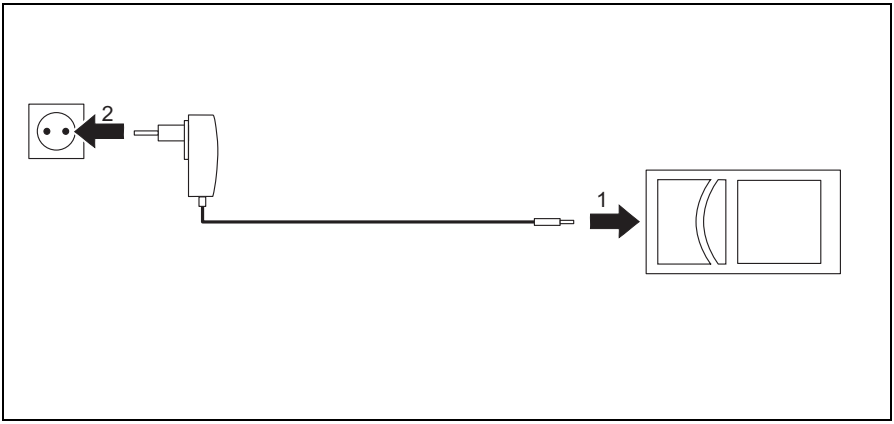

► Connect the mains adapter cable to the mini USB port on the Pocket PC (1).

► Plug the mains adapter into a mains outlet (2).

The installed battery is now charged. The battery indicator flashes orange.

When the battery is fully charged, the power-on indicator lights continuously orange.

Charging the battery via the cradle

You can connect the mains adapter to the cradle:

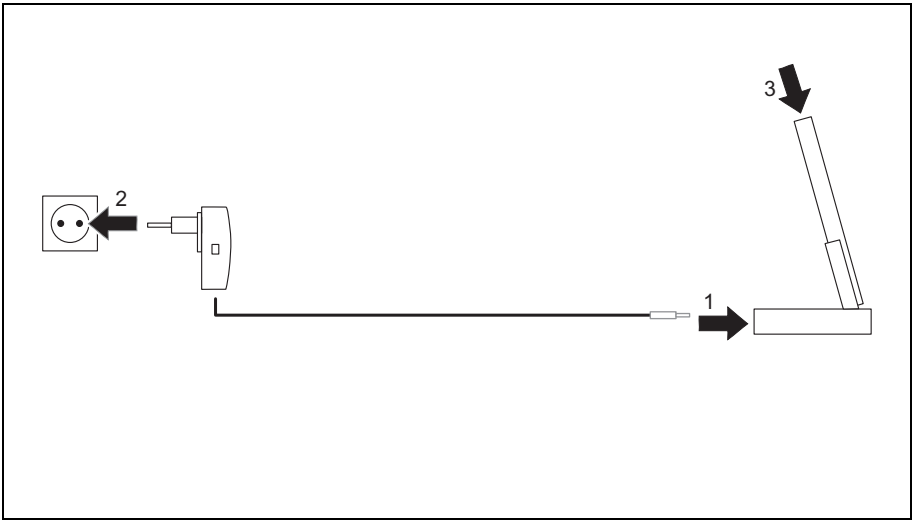

► Connect the mains adapter cable to the charging device port on the cradle (1).

► Plug the mains adapter into a mains outlet (2).

► Place the Pocket PC in the cradle (3).

The installed battery is now charged. The battery indicator flashes orange.

When the battery is fully charged, the battery indicator lights continuously orange.

Charging the battery via a USB port

► Connect the USB cable to your Pocket PC.

► Connect the USB cable to the computer's USB port.

i Depending on the charge current the charging process may take longer than with a mains adapter.

Optimising battery life

When you have completely charged the battery, you can operate the Pocket PC without a mains power connection. However, it is not possible to exactly specify the maximum operating time, as different applications use more or less energy.

In the system settings you can make settings that help you save energy when using your Pocket PC – see "Energy saving functions ". Doing this will help you to optimise battery life.

Inserting and removing an expansion card

A slot enables the operation of an expansion card of the type "Secure Digital I/O" or "MultiMediaCard".

Observe the manufacturer's instructions when using the expansion cards.

Never use force when inserting or removing an expansion card.

Make sure that no foreign objects enter the slot.

Inserting the expansion card

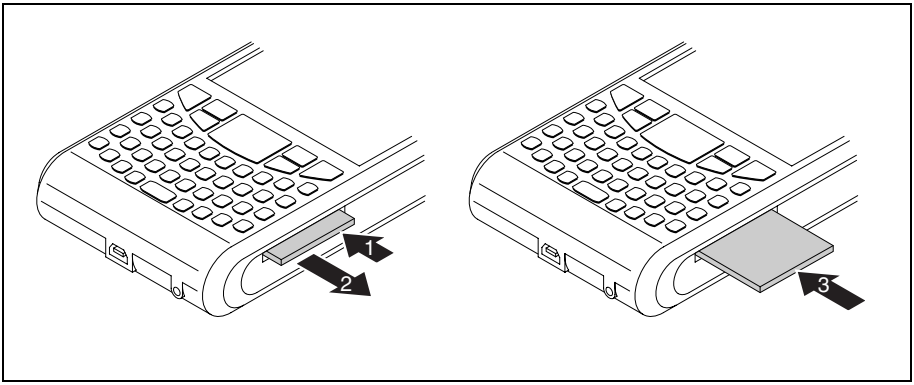

► If necessary, also press on the edge of the placeholder so that the placeholder is slightly pushed out of the slot (1).

► Pull the placeholder out of the Pocket PC (2).

► Carefully push the expansion card into the slot (3).

The expansion card can protrude by one to several millimetres (depending on the type of expansion card).

Keep the placeholder for the expansion card in a safe place. When you remove the expansion card again, you should reinsert the expansion card placeholder. This prevents foreign matter from getting into the slot.

Removing the expansion card

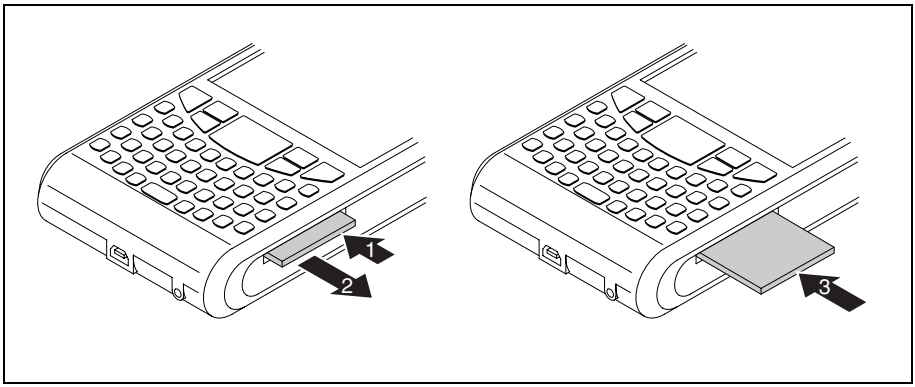

► Press on the edge of the expansion card so that the expansion card slightly jumps out of the slot (1).

► Slide the expansion card out of the Pocket PC (2).

► Insert the placeholder into the slot again (3) if necessary.

The placeholder protrudes by one to two millimetres.

Using the Pocket PC as a USB Host device

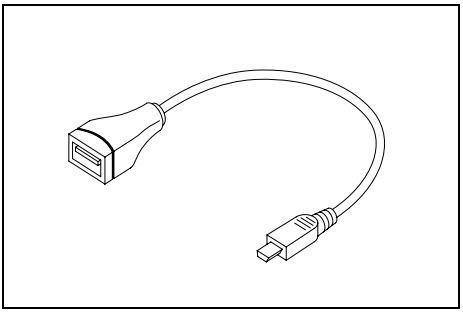

With the optional USB Host cable you can use your Pocket PC as a USB Host device and connect various USB devices, such as a MEMORYBIRD, to the Pocket PC.

i

You can connect USB devices from Fujitsu Siemens Computers (e.g. MEMORYBIRD or STORAGEBIRD) immediately.

If you want to connect other USB devices, ask your dealer whether you will need to install corresponding drivers first.

The current consumption of the USB device must not exceed 100 mA (at +5 V). USB devices with a current consumption of more than 100 mA must be supplied with power via their own power supply.

► Select *Start – Settings – System – USB Mode*.

The window for selecting the USB mode pops up.

► Select the *USB Host* option.

► Confirm with *OK*.

► Connect the USB host cable to the mini USB port on the Pocket PC.

► Connect the USB device (such as a MEMORYBIRD) to the USB port of the USB Host cable.

The USB device is now connected to your Pocket PC.

► If the battery charge level of your Pocket PC is low, you should connect the mains adapter (see "Connecting the power adapter").

► When you no longer need to operate the Pocket PC as a USB Host, change the USB mode back to *USB Client*.

Configuring device settings

i

Detailed information about how to configure device settings such as the date, time, alarms, background images, tones, application and task displays etc. can be found in the help file on your Pocket PC.

Adapting menus

Frequently used programs appear in the Start menu. You can adapt the Start menu to meet your needs.

► Touch the *Menus* symbol under *Start - Settings - Personal*.

A list of programs/applications appears.

To remove programs from the Start menu, click in the checkbox of the program. The check mark is removed from the checkbox.

To add programs to the Start menu, click in the checkbox of the desired program. A check mark appears in the checkbox.

Fast access to programs via FSC SpeedMenu

Do you want fast access to programmes but all application buttons are already assigned? Do you always open the same documents and folders? Do you sometimes miss having an extra hand for using the stylus?

Use *FSC SpeedMenu* and accelerate daily processes on your Pocket LOOX!

- Create and organise your own list of frequently used documents, programs and folders.
- Open them quickly directly from the menu.
- One-handed or stylus operation as desired.

i

Detailed information on this topic can be found in the help file on your Pocket PC.

Creating messages

Just like any other mobile phone, you can use your Pocket PC to send SMS and MMS messages as well as e-mails.

Incoming messages are indicated with the die LEDs (see "Indicators (LEDs) and status indicators in the display") and a message on the screen and, depending on the device settings, via a signal tone or vibration alarm.

Inbox

You can use the Inbox to check and manage all incoming and sent message types (SMS, MMS, e-mail), as well as to create and send new messages.

The last messaging application that was used is always active in the window, e.g. MMS or e-mail.

All message types have their own account with subfolders.

Via the *Inbox* menu you can display the accounts and subfolders for the active message type or for a different message type:

- Trash
- Draft
- Inbox
- Outgoing messages
- Sent messages

With the aid of the *Sort by* menu you can also display the messages according to certain criteria:

- Message type
- From
- Date received
- Subject

Use the *New* function to create a new message of the currently selected message type.

Display inbox

► Click on *Start – Messaging*.

The inbox is displayed.

► Select the required message type and the required subfolder via the *Inbox*.

All messages of the selected type are displayed.

SMS messages

You can also use your Pocket PC to create SMS text messages in exactly the same way as a normal mobile telephone. Each SMS text message can contain a maximum of 160 characters.

Creating and sending SMS messages

► Click on *Start – Messaging*.

► Click on the dropdown menu *Inbox*.

► Tap on the SMS account.

► Select *New*.

A window opens for writing the new SMS.

► Enter the addressee and the text message for the SMS.

► Select *Send*.

The SMS message is sent.

i Detailed information on SMS messaging can be found in the help file on your Pocket PC.

Managing SMS messages on the SIM card

With the SMS Manager you can display all of the messages saved on your SIM card, transfer them to your Pocket PC or delete them from the SIM card.

► Select *Start - Programs – SMS Manager*.

The SMS manager is displayed together with the SMS messages saved on the SIM card.

► Select the required SMS message.

► To copy an SMS message into the Inbox of your Pocket PC, select *Save – Save to Inbox*.

► To copy all SMS messages into the Inbox of your Pocket PC, select *Save – Save All To Inbox*.

► Do delete an SMS message from the SIM card, select *Delete – Delete From SIM*.

► Do delete all SMS messages from the SIM card, select *Delete – Delete All SMS*.

► Select *OK* to exit the SMS Manager.

MMS messages

MMS (Multimedia Messaging Service) messages are messages which can contain multimedia objects like pictures, sound or video clips (3GP, MP4, AVI, WMV). You can attach files with a maximum size of up to 300 kB.

Before you can send any MMS messages you will need to configure your MMS application, see "Configuring the MMS application".

i Your telephone network provider will generally provide you with the data for your MMS connection.

Configuring the MMS application

In order to configure your MMS application, you will need to define your MMS connection and an MMS profile.

Configuring the MMS connection

► Click on *Start – Settings*.

► Select the *Connections* tab.

► Select the *Connections* icon.

► Select *Advanced*.

► Select *Find networks*.

► Under *Use programs with automatic Internet access* click on *New*.

The *ISP name* window appears on the screen.

► Enter *MMS* in this field..

► Select the *Modem* tab.

► Select *New*.

► Under *Enter name of connection* enter the name "My connection".

► From the *Select modem* dropdown list select the entry *Mobile radio connection (GPRS)*.

► Select *Next*.

The *My connections* window appears on the screen.

► Under *Access point name,* enter the name for the access point provided to you by your telephone network provider.

► Select *Next*.

► Enter the user name, password and domain given to you by your telephone network provider.

► Click on *Finish* to confirm your entries.

Your MMS connection is configured.

Configuring the MMS profile

You are in the Today screen. Your MMS connection is configured.

► Click on *Start – Messaging*.

The inbox is displayed.

► Click on *Menu – MMS Settings*.

The *Settings* window appears on the screen.

► Choose any profile and tap on *Edit*.

The Profile Settings window is displayed.

► Enter the profile settings provided by your telephone network provider.

► Click on *Finish* to confirm your entries.

Your MMS profile is configured.

Creating and sending MMS messages

► Click on *Start – Messaging*.

► Click on the dropdown menu *Inbox*.

► Tap on the MMS account.

► Select *New*.

The window with the new MMS is opened.

► Enter the addressee and the subject of the MMS.

► To attach a picture or video clip, select *Menu – Insert – Picture* or *Menu – Insert – Video* and select the picture or video you would like to attach.

The picture or video clip is displayed in the MMS window.

► To attach an audio file, select *Menu – Insert – Voice note* and select the audio file you would like to attach.

The audio file is displayed in the MMS window.

► To attach a different file type, select *Menu – Insert – File* and select the file.

The file is displayed in the MMS window.

► Select *Enter text* and type in your text message.

► Select *Send*.

The MMS message is sent.

E-mail

With the Pocket PC you have various options for sending and receiving e-mails:

Private mail:

- Via a POP3, SMTP or IMAP4 account from your ISP

Company mail:

- Via a VPN corporate network
- Via *ActiveSync*

In order to be able to send e-mails you will therefore need a suitable e-mail account from your ISP or a suitable e-mail account on a VPN corporate network (Virtual Private Network).

Setting up e-mail accounts for POP3, SMTP or IMAP4

► Click on *Start – Messaging*.

► Click on the dropdown menu *Inbox*.

► Tap on the e-mail account.

► Select *Menu – Tools – New Account*.

► Enter the required data.

► Click on *Finish* to confirm your entries.

Setting up an e-mail account for the VPN corporate network

i Your ISP or administrator will generally be able to provide you with the data for your e-mail account.

► Select *Start - Programs - ActiveSync*.

The *ActiveSync* window is opened.

► Select *Menu – Add Server Source* or *Menu – Configure Server*.

The Server Settings window is opened.

► Enter the server address.

► Click on *Next* to confirm.

► Enter the user name, password and domain.

► Click on *Finish* to confirm your entries.

Setting up e-mail sending via ActiveSync

► Connect your Pocket PC to your computer, see "Connecting your Pocket PC and computer".

► Follow the instructions on the screen.

Creating and sending e-mails

With your Pocket PC you can easily send e-mail messages with attachments (photos, voice notes, files).

► Click on *Start – Messaging*.

► Click on the dropdown menu *Inbox*.

► Tap on the e-mail account.

► Select *New*.

The window with the new e-mail is opened.

► Enter the addressee, the subject and the message.

► Select *Send*.

The e-mail is sent.

i Detailed information on creating and sending messages can be found in the help file on your Pocket PC.

Downloading e-mails from a server (e-mail pull)

The process for downloading e-mails from a server depends on your e-mail account:

- If you have an Outlook e-mail account then you can transfer your e-mails via *ActiveSync* to your handheld – see "Data synchronisation with ActiveSync".
- If you have an ISP e-mail account or a VPN server connection then you will need to log on to the Internet or network.

► Click on *Start – Messaging*.

► Click on the dropdown menu *Inbox*.

► Tap on the e-mail account.

► Click on *Menu – Send/Receive*.

Any new e-mails on the server are transferred to the Pocket PC, and e-mails in the "Outgoing messages" folder of your Pocket PC are transferred to the server for sending.

Receiving e-mails and other data automatically in real-time (e-mail push)

If you have a data connection to a mobile network provider (GPRS/UMTS) for your Pocket PC then your e-mails, calendar data, contact data, tasks etc. can be delivered from the network to your Pocket PC in real-time via e-mail push.

If your device is switched off when new data are received via e-mail push then the LED will start to flash.

The following conditions must be satisfied in order to use e-mail push:

- The server must support e-mail push.
- Exchange Server 2003 Service Pack 2 is installed.
- Direct push has been set up by your administrator on your Pocket PC.

i Please consult your administrator if you have any queries.

In general, e-mail push should already be activated on your device after being set up by the administrator.

To deactivate e-mail push, you will need to deactivate the corresponding profile on your Pocket PC:

► From the Today screen, press and hold the End button.

The profiles selection menu is displayed.

► Select the profile *Direct Push*.

The profile is deactivated.

E-mail push is deactivated.

► To reactivate e-mail push, select the profile *Direct Push* again.

The profile is activated.

i Detailed information on adjusting the device behaviour when e-mail push is activated can be found in "Configuring device behaviour when E-mail push is activated".

Using the Internet

In order to use the Internet you will need to have Internet access via an ISP or on a VPN corporate network (Virtual Private Network).

In some cases your Internet access may already be pre-configured on your device. If this is the case you will simply need to launch Internet Explorer – see "Accessing the Internet with Internet Explorer".

Otherwise you can configure your Internet access via *FSC CONNECTMOBILITY-E2C*. Detailed information on this topic can be found in the help file on your Pocket PC.

i Your ISP or administrator will be able to provide you with the required Internet access data.

Accessing the Internet with Internet Explorer

With *FSC CONNECTMOBILITY-E2C* you can set up a connection to the Internet or to your company's intranet via WLAN, GSM or GPRS at the push of a button.

Your Pocket PC uses Internet Explorer Mobile as its Internet browser. This offers extensive browser functionality.

Calling up Internet Explorer Mobile

You have selected the desired connection type with *FSC CONNECTMOBILITY-E2C* and established a connection.

► Click on *Start – Internet Explorer*.

Internet Explorer is displayed.

i Detailed information on the use of Internet Explorer Mobile and *FSC CONNECTMOBILITY-E2C* can be found in the help file on your Pocket PC or in "Internet and intranet connections with CONNECTMOBILITY-E2C".

Using GPS functions

With a GPS receiver and navigation software you can use the Pocket PC as a navigation system. Depending on the equipment, the GPS receiver is either integrated or available as an external accessory.

i Map materials for your Pocket PC are available from retailers on DVD or on memory cards or via an online shop.

You have two options for using the navigation software on your Pocket PC:

- You can use the navigation software on a preinstalled expansion card.
- You can install the navigation software via your computer, e.g. from a DVD.

i To register your navigation software you will require the serial number of the navigation software and possibly also the device ID of your Pocket PC.

The device ID will be displayed after the initial start-up of the navigation software if necessary.

► Register your navigation software and your map materials as described in the instructions for the navigation software.

A description of how to use the navigation software is provided in the instructions on the navigation software.

i If the reception signal is weak, you can connect an external GPS antenna. The external GPS antenna improves performance under difficult reception conditions.

The external GPS antenna is available as an accessory.

GPS connects to COM6 at 9600 Bit/s.

Detailed information on this topic can be found in the help file on your Pocket PC.

FSC GPSLocator

FSC GPSLocator is demonstration software which illustrates how the GPS receiver of your Pocket LOOX device works.

When you start the *FSC GPSLocator* the GPS receiver is also activated. Exiting the programme deactivates the GPS receiver.

The GPS module is calibrated the first time you start it. This can take several minutes. When you subsequently start the device your GPS receiver will be ready for use in just a few seconds.

Inside a building you will not normally be able to receive a GPS signal. It is therefore best to calibrate the GPS receiver out in the open.

GPSLocator shows you the GPS coordinates of your current location. If you are on the move with the device - either on foot or in the car - the direction of movement and speed are also displayed.

The *POI Finder* is an application which helps you to find your way back to a previously saved position.

Using the camera functions (optional)

Depending on its equipment level, your Pocket PC will come with two integrated cameras: one VGA camera on the front and one 2 megapixel autofocus camera on the back of the device (resolution: 1600 x 1200).

You can use the VGA camera for video telephone calls – see "Making video telephone calls".

With the 2 megapixel autofocus camera you can record both individual still photographs as well as short video sequences.

2 megapixel autofocus camera

Supported file formats

File type	Formats
Pictures	BMP, JPG
Video	AVI, WMV, MPEG4, 3GP

Starting the application "Pictures & Videos"

You can create and manage pictures and videos with the *Pictures & Videos* application.

► Select *Start - Programs – Pictures & Videos*.

The application *Pictures & Videos* is opened.

Starting the camera directly

► Push the application button 5: Camera

The camera is started.

Taking pictures

The camera window is open.

► To adjust the autofocus, briefly press the application button 5: Camera.

► To take a picture, briefly press the application button 5 (Camera), which acts as the shutter release.

The picture is taken and displayed in the *Pictures & Videos* window as a full-size picture.

► Select *Camera* to take more pictures.

► Select *OK* to return to the overview of all pictures and videos.

Recording a video sequence

The application *Pictures & Videos* is opened.

► Select *Camera*.

or

► Tap the *Camera* icon.

The camera window opens.

► Select *Menu – Video*.

The camera is switched to video mode.

► To start the video recording, briefly press the application button 5 (Camera), which acts as the shutter release.

The video recording starts.

► To stop the video recording, briefly press the application button 5 (Camera) again.

The video recording stops.

► If you would like to record more video sequences, click on the middle of the navigation key again.

► Select *OK* to return to the overview of all pictures and videos.

Configuring the camera and video settings

Depending on whether the camera mode or video mode is active, further options for using the camera are available in the *Menu*.

Camera settings

Option	Meaning
Video	This option switches the camera to video mode.
Mode	With this option you can choose between different recording modes: • Normal: For taking individual shots. • Burst: For taking a sequence of 5 shots. • Timer: Self timer option (5-second delay)
Brightness	Adjustment of the brightness settings
Resolution	Adjustment of the image resolution
Zoom	Adjustment of the zoom settings
Options	Various options are available for changing settings (image size, slide show, file location etc.).

Video settings

Option	Meaning
Photo	This option switches the camera to photo mode.
Brightness	Adjustment of the brightness settings
Quality	Adjustment of the video quality settings
Options	Various options are available for changing settings (image size, slide show, file location etc.).

i

Detailed information on this topic can be found in the help file on your Pocket PC.

Working with files

Windows Media Player

With *Windows Media Player*, you can play back various audio and video formats on your Pocket PC:

File type	Formats
Audio	WMA, MP3, WAV
Video	WMV, MPEG4

i You can find detailed information on how to use the Windows Media Player in the help file on your Pocket PC.

ClearVue PDF

With *ClearVue PDF*, you can view PDF files on your Pocket PC.

i You can find detailed information on how to use *ClearVue PDF* in the help file on your Pocket PC.

Using Java applications

With the *JBlend* programme, you can run Java applications for mobile devices, download them from the Internet onto your device and install them.

Downloading Java applications

► Select Start – Programs – JBlend.

The programme and the available Java applications are displayed.

► Select Download.

Internet Explorer is displayed.

► Enter the desired Internet address.

► Download the desired Java application.

You will be asked if you wish to install the Java application.

► Confirm with Yes.

Starting Java applications

► Select Start – Programs – JBlend.

The programme and the available Java applications are displayed.

► Tap on the Java application you wish to start.

The Java application is started.

► Uninstalling Java applications

► Select Start – Programs – JBlend.

The programme and the available Java applications are displayed.

► Select the Java application you wish to uninstall.

► Select Menu - Delete.

You will be asked if you wish to uninstall the Java application.

► Confirm with Yes.

Compressing files with FSC MobileZip

FSC MobileZip lets you open, unpack, create and edit Zip archives.

FSC MobileZip extends the popup menu in the File Explorer. If you tap for longer on a file, you will see additional entries in the popup menu, with which you can quickly create and extract archives.

FSC MobileZip supports archives up to a size of 4 GB as well as password protection with simple encryption.

i

You can find detailed information on how to use *FSC MobileZip* in the help file on your Pocket PC.

Security functions

Your Pocket PC can be protected or locked in several ways:

Lock	Meaning
Password protection	Password protection provided by the *Microsoft Windows 5.0 Phone Edition* operating system, see "Password protection". Password protection is lost if the device is reset to the factory settings.
Device lock (key and display lock)	Protects the device by locking the operating elements against accidental inputs during operation, see "Device lock (key and display lock)".
FSC KeyLock	Prevents the device in standby mode (disabled status) from being reactivated when an application key is pressed, see "FSC KeyLock".
FSC SecureLock	Protects the devices against access by third parties by requesting a password, see "FSC SecureLock". Password protection is retained even if the device is reset to the factory settings and offers special anti-theft protection A stolen device is worthless.
SIM Lock	The device is only activated for a specific SIM card (by the telephone network operator), see "Making telephone calls with the Pocket PC", section "SIM lock". Prevents the device from being used with other SIM cards.

Password protection

You can use a password to protect your Pocket PC against unauthorised use. This makes your data accessible only to persons who know the password.

i When *FSC SecureLock* is set, this password protection can only be lifted after the *FSC SecureLock* has been cleared.

► Tap on the Password symbol under Start – Settings – Personal.

► Select the type of password you prefer:

– A password consisting of four numbers (simple 4-digit password).

– A password of alphanumeric characters (a complex alphanumeric password).

If a password has been assigned, you will have to enter this password the next time you switch on.

If you have forgotten your password, you can restart your Pocket PC by resetting it to the factory settings (see "Cold starting and resetting factory default settings").

Device lock (key and display lock)

With the device lock (key and display lock) you can lock the following device elements and functions during active operation, in order to prevent accidental inputs:

- Application buttons
- Keypad
- Display
- Acceptance of an incoming call via the talk key
- Ending a call via the End key

i The device can be switched off even when the device lock is active.

Locking the device

► Press and hold the Enter key.

The device is locked.

Deactivating the device lock

► Press and hold the Enter key.

or

► Press *Unlock* and the star key consecutively.

The device is unlocked.

FSC KeyLock

Use the *FSC KeyLock* to prevent accidental activation of your Pocket LOOX. for example, if the device is in your pocket.

Normally, the device is activated if one of the application or telephone keys is pressed.

Activating FSC KeyLock

► Select *Start – Settings – Personal – Keys – FSC KeyLock*.

► Activate *Lock application keys*.

Switching on with active lock

► Briefly press the End key.

► Then press and hold the Enter key.

FSC SecureLock

To protect your Pocket PC and your data from unauthorised access by third parties, you can protect it with a password.

► Select *Start – Settings – System – Secure Lock*.

► Activate the *Theft protection* control box.

► Select the desired type of password in the *Password type* field. Enter the password and confirm it if necessary.

► Enter a term on the *Note* tab page that will remind you of your password if necessary, but which will not enable other users to guess your password.

This term is displayed if the password has been entered incorrectly five times.

► Tap *OK*.

If your Pocket PC is reset to the factory settings, you will be prompted to enter the password.

When you restart your device or if you do not use it for a long time while it is switched on, you will be prompted to enter the password.

Connecting and networking the Pocket PC with other devices

The Pocket PC offers a wide range of ways to exchange data with other devices or to work in a network.

In addition, the wireless LAN (optional) and Bluetooth (optional) radio modules are available for wireless communication.

This chapter provides information on wireless data transfer

- Via wireless LAN
- Via Bluetooth

Activating and deactivating radio modules

You can use Wireless Manager to activate or deactivate the telephone, Bluetooth and WiFi/WLAN.

You are in the Today screen.

► Tap on the telephone symbol.

The Wireless Manager is displayed.

► To activate or deactivate the telephone, Bluetooth or WiFi/WLAN, tap on the symbol next to *WiFi*, *Bluetooth* or *Telephone*.

or

► To activate or deactivate all components, tap on the symbol next to *All*.

The selected component is activated or deactivated.

Wireless connection via Wireless LAN

Your Pocket PC is equipped with an integrated wireless LAN. Information on this topic is provided in the help file on your Pocket PC. You can establish WLAN connections using the *CONNECTMOBILITY-E2C* software.

i You can find more information on the *CONNECTMOBILITY-E2C* software in the "Internet and intranet connections with CONNECTMOBILITY-E2C" section and in the help file on your Pocket PC.

Wireless communication with Bluetooth

With your Pocket PC with an integrated Bluetooth module you can communicate wirelessly with other Bluetooth devices, e.g. with another Pocket PC, a computer or a mobile phone.

You can establish Bluetooth connections via the *BT Manager*. Start the *BT Manager* via the FSC SpeedMenu.

i

You can find detailed information on the *BT Manager* in the help file on your Pocket PC.

Selecting location for Bluetooth operation

- We recommend that you use the Pocket PC with the Bluetooth components in a typical operating environment. Other Bluetooth devices, which you want to communicate with, should be located at a distance of up to 10 m.
- Only install a partner device within the recommended distance. Observe the output power class of the partner device when doing so. Details are contained in the operating manual for the partner device.
- Use the Pocket PC with the Bluetooth at least 2 m away from other electrical or electronic systems. If you must use the Pocket PC near a microwave cooker, then maintain a distance of at least 3 m from the microwave cooker, as the reception is subject to interference from the microwaves.
- Should problems result when communicating via Bluetooth because radios or radio devices are located in the vicinity, then move the Pocket PC to a different location.

Energy saving functions

The Pocket PC uses less power when the energy saving functions are enabled. This means you can work with the Pocket PC for longer before having to recharge the battery.

General information on energy management

The battery operating time is considerably dependent on the applications used. Please note that a particularly large amount of energy is required to play sound files or make sound recordings.

Data exchange with a computer also consumes additional battery power. Therefore, always connect your Pocket PC to an electrical outlet during data exchange if possible.

Using energy saving functions

You can save energy in several ways to optimally utilise the battery operating time:

Configuring standby mode

► Under *Start – Settings – System – Power*, select the number of minutes after which the Pocket PC is to switch into the standby mode when it is not used.

After the specified time has passed, the Pocket PC will automatically bet set to standby mode.

i

Press the End key to end standby mode.

The Pocket PC returns to the point at which you interrupted your work.

Switching off display lighting

► Under *Start – Settings – System – Display lighting*, select the number of minutes after which the display lighting is to be switched off in the battery mode when the Pocket PC is not used.

Configuring display lighting

You can adjust the display lighting on your Pocket PC to make it darker or brighter. Reduce the display brightness to save energy.

► Select *Start – Settings – System – Display lighting – Brightness*.

► Use the slide control to adjust the display lighting during battery operation and/or during use with an external power supply, until the desired level of brightness is reached.

► Confirm with *OK*.

Configuring key illumination

► Select *Start – Settings – System*.

► Select *Key illumination*.

The window for adjusting the key illumination is displayed.

► Set the desired duration of key illumination during battery operation and during use with an external power supply.

► Confirm with *OK*.

i Key illumination can also be activated and deactivated by pressing and holding the **FN** key.

Configuring device behaviour when E-mail push is activated

You can configure how your device should behave when E-mail push is activated. Usually, the device LED starts flashing when new information is being received. However, you can change this behaviour.

► In the Today screen, press and hold the End key.

The profile list is displayed.

► Use the navigation key to select the desired profile.

► Select *Menu – Edit*.

► Enter the settings for E-mail push and confirm with *OK*.

Switching on the sound and setting the volume

► Tap on the loudspeaker symbol in the title bar.

A popup window for the loudspeaker settings appears.

► Set the desired volume on the slide control with the stylus.

► To switch off the sound, activate the selection field for *Off* with the stylus.

► Touch the display anywhere outside the popup window.

i

Device sounds can also be activated and deactivated by pressing and holding the FN key.

Using Wireless Manager

You can use Wireless Manager to manage the energy status of telephone, Bluetooth and WiFi/WLAN.

You are in the Today screen.

► Tap on the telephone symbol.

The Wireless Manager is displayed.

► To activate or deactivate the telephone, Bluetooth or WiFi/WLAN, tap on the symbol next to *WiFi*, *Bluetooth* or *Telephone*.

or

► To activate or deactivate all components, tap on the symbol next to *All*.

The selected component is activated or deactivated.

Troubleshooting and tips

If a fault occurs in your Pocket PC, try to eliminate it with the measures described in this chapter. If you fail to correct the problem, proceed as follows:

► Make a note of the steps and the circumstances that led to the fault. Also make a note of any error messages displayed.

► Switch the Pocket PC off.

► Contact your sales outlet or our hotline/help desk.

Installing new software

You will find information on installing supplementary programmes in the *ActiveSync* help file that you can call up after installing *ActiveSync* on your computer.

► When installing programmes or drivers, important files may be overwritten and modified. You should make a backup before the installation in order to access the original files if an error should occur after installation (see "Data synchronisation with ActiveSync").

The Pocket PC's time or date are not correct

Cause	Troubleshooting
Time and date are incorrect.	► Tap on the *Clock* symbol under *Start – Settings – System*. ► Change the time. or ► Connect your Pocket PC via *ActiveSync* to your computer. ► Synchronise data between the Pocket PC and the computer. The time and date are also synchronised in the process.

The display of the Pocket PC remains dark

Cause	Troubleshooting
Display lighting is switched off.	► Press and hold the End key.

The display is difficult to read

Cause	Troubleshooting
Reflected glare	► Turn the Pocket PC until you can see the information in the display again.

The Pocket PC switches off

Cause	Troubleshooting
The battery is dead.	► Connect the power adapter to the Pocket PC to charge the battery. or ► Connect the power adapter to the cradle and insert the Pocket PC in the cradle to charge the battery. The battery is charging. The power-on indicator flashes orange.

The Pocket PC does not start after being switched on

Cause	Troubleshooting
The battery is dead.	► Connect the power adapter to the Pocket PC to charge the battery. or ► Connect the power adapter to the cradle and insert the Pocket PC in the cradle to charge the battery. The battery is charging. The power-on indicator flashes orange.
The power adapter is not connected correctly.	► Switch the Pocket PC off. ► Check whether the power adapter is properly connected to the Pocket PC and the electrical outlet. ► Then switch the Pocket PC on again

The Pocket PC does not respond any more

Cause	Troubleshooting
An application program has caused the fault.	► Restart the Pocket PC (see "Switching the Pocket PC on and off"). or ► If the restart does not work, reset the Pocket PC to the factory settings (see "Cold starting and resetting factory default settings").
The battery is dead.	► Connect the power adapter to the Pocket PC to charge the battery. or ► Connect the power adapter to the cradle and insert the Pocket PC in the cradle to charge the battery. The battery is charging. The power-on indicator flashes orange.

The battery discharges too quickly

Cause	Troubleshooting
The battery is either too hot or too cold.	► Bring the Pocket PC up / down to a normal temperature again. If the operating time of the battery mode is extremely short, the battery is probably old and should be replaced. Please contact your dealer for a new battery.

The End button does not respond properly

Cause	Troubleshooting
You have pressed the End key for too long to switch the Pocket PC on or off.	► Briefly press the End key until the Pocket PC switches on or off.

No sound or minimal volume

Cause	Troubleshooting
Volume set wrongly.	► Touch the loudspeaker symbol in the navigation bar. A popup window for the loudspeaker settings appears. ► Activate the selection field for *On* with the stylus. or ► Set the desired volume on the slide control with the stylus.

Poor reception via GPS

Cause	Troubleshooting
The installation position of the Pocket PC in your vehicle is unfavourable.	► Change the installation position of the Pocket PC.
Your vehicle's windscreen is coated.	► Use an external GPS antenna (available as an accessory).

Contact with hotline/help desk

If you are unable to solve a certain problem, please contact the hotline/help desk. Additional details are contained in the "Safety" and "Warranty" manuals. Please have the following information ready when you call:

- The model name and serial number of the Pocket PC. The serial number is located on a sticker on the backside of the Pocket PC.
- Notes of any messages that appear on the screen and information on acoustic signals.
- Any changes you have made to the hardware or software after receiving the Pocket PC.
- Your system configuration and all peripheral devices connected to your system (e. g. keyboard).
- Your sales contract.
- Your IMEI number.

The Fujitsu Siemens Computers hotline or help desk requires the device information for your Pocket PC in order to process your problem. You can find this information directly on your device:

Calling up the IMEI number

The IMEI number (International Mobile Equipment Identity) is a 15-digit serial number, which is used to uniquely identify your Pocket PC.

► Select *Start – Settings – System – System information*.

► Select *Identity*.

The IMEI number is displayed.

Calling up the UUID

The UUID (Universally Unique Identifier) is a globally unique 16 or 28 bit number, that is also used to identify your device.

► Select *Start – Settings – System – System information*.

► Select *Identity*.

The UUID is displayed.

Technical data

Pocket PC

System	Pocket LOOX T810	Pocket LOOX T830
General		
Processor	Intel® PXA270 416 MHz based on Intel® XScale™ micro-architecture	Intel® PXA270 416 MHz based on Intel® XScale™ micro-architecture
Memory	System memory (RAM): 64 MB Flash memory (ROM): 128 MB	System memory (RAM): 64 MB Flash memory (ROM): 128 MB
Electrical data		
Regulations complied with	CE, FCC, UL, Ulc	CE, FCC, UL, Ulc
Protection class	III	III
Maximum power draw: (Pocket PC on with battery charging)	5 W	5 W
Display		
Transflective TFT display	2.4 inch, 240 x 249 colours, 65,536 colours, LED background lighting	2.4 inch, 240 x 249 colours, 65,536 colours, LED background lighting
Card slots		
	"Secure Digital I/O", "MultiMediaCard"	"Secure Digital I/O", "MultiMediaCard"
Ports/interfaces		
Input/output port	USB 1.1	USB 1.1
Audio	Microphone, loudspeaker, headphones (3.5 mm), receiver for GSM/UMTS calls	Microphone, loudspeaker, headphones (3.5 mm), receiver for GSM/UMTS calls
Bluetooth	Bluetooth 2.0	Bluetooth 2.0
Wireless LAN	802.11 b/g, WiFi certified	802.11 b/g, WiFi certified
GPS	SiRF GCS3F (Star III)	SiRF GCS3F (Star III)

Cameras		
Camera 1	–	VGA camera (640 x 480) for video telephony via UMTS
Camera 2	–	2 mega pixel auto-focus camera (1600 x 1200) for images/video
Baseband		
UMTS/GSM/GPRS Baseband	EMP U250 GSM 900/180/1900 UMTS 2100	EMP U250 GSM 900/180/1900 UMTS 2100
Environmental conditions		
Environment class 7K1/7K2	DIN IEC 721 EN 60721	DIN IEC 721 EN 60721
Housing class 7M2	DIN IEC 721 EN 60721	DIN IEC 721 EN 60721
Temperature ● Operation ● Transport ● Storage < 1 month ● Storage > 1 month	 –10 °C – 55 °C –40 °C – 75 °C –20 °C – 60 °C –20 °C – 45 °C	 –10 °C – 55 °C –40 °C – 75 °C –20 °C – 60 °C –20 °C – 45 °C
Dimensions		
Height/width/depth	126.6 mm x 64.6 mm x 21.6 mm	126.6 mm x 64.6 mm x 21.6 mm
Weight	195 g +/-10 g	195 g +/-10 g

Battery (Li-Ion)

Rated capacity	1530 mAh
Charging time (when not in operation):	Max. 4 hours
Operating time	• Up to 4 hours GSM talk time • Up to 150 hours standby

Power adapter

Electrical data	
Primary: ● Rated voltage: ● Rated frequency:	 100-240 V 50 - 60 Hz
Secondary: ● Rated voltage: ● Max. rated current:	 5 V +/- 5 % 1.0 A

Manufacturer’s notes

Environmental protection

Fujitsu Siemens Computers has defined standards for environment-friendly product design with a guideline applicable corporate-wide. The binding application of these internal guidelines continuously implements ecological product requirements. The main points are:

- Repair friendliness and long life due to modular design
- Low noise emissions
- Low energy consumption
- Minimization of material diversity
- Ecological criteria for plastics
- Avoidance of materials harmful to the environment
- Recyclability

More details on the subject of environmental protection are available on the Internet at: *www.fujitsu-siemens.de/umwelt* or *www.fujitsu-siemens.com/rl/aboutus/envman/index.html*.

Disposal and recycling

You will find further information about country-specific recycling and disposal options in the Internet at *www.fujitsu-siemens.com/recycling* or on the Microsoft Getting Started CD.

CE marking

CE0889 Products bearing the CE marking comply with the R&TTE Directive (1999/5/EC), EMC Directive (89/336/EEC), and the Low Voltage Directive (73/23/EEC) issued by the Commission of the European Community.

CE compliance of this device is valid only if powered with by a CE-marked AC Adapter provided by Fujitsu Siemens Computers. Compliance with these directives implies conformity to the following European Norms (in parentheses are the equivalent international standards and regulations):

- EN 55022 (CISPR 22) — Electromagnetic Interference
- EN 55024 (IEC 61000-4-2, 3, 4, 5, 6, 8, 11) — Electromagnetic Immunity
- EN 61000-3-2 (IEC 61000-3-2) — Power Line Harmonics
- EN 61000-3-3 (IEC 61000-3-3) — Power Line Flicker
- EN 60950 (IEC 60950) — Product Safety
- ETS 300 328-2 — Technical requirements for 2.4 GHz radio equipment
- EN 301 489-1, -17 — General EMC requirements for radio equipment

The IEEE 802.11b wireless LAN and Bluetooth functionality of this product can be used in the following EU countries, EU candidate countries and EFTA countries: Belgium, Denmark, Germany, Estonia, Finland, France, Greece, Great Britain, Ireland, Iceland, Italy, Liechtenstein, Latvia, Lithuania, Luxemburg, Malta, Netherlands, Norway, Austria, Poland, Portugal, Sweden, Switzerland, Slovakia, Slovenia, Spain, Czech Republic, Hungary and Cyprus.

The user is responsible for radio interference that may occur when operating the device.

For IEEE 802.11b wireless LAN operation of this product, only a limited band is available in France (Channels 10, 11, 12, and 13 only). The Autorité de régulation des télécommunications (ART) has special regulations for hotspots allowing other channels, too.
Please check with ART (http://www.art-telecom.fr) on this for local rulings and for authorization.

???Information on exposure/specific absorption rate (SAR)

This device meets the EU requirements (1999/519/EU) on the limitation of exposure of the general public to electromagnetic fields by way of health protection.

The limits are part of extensive recommendations for the protection of the general public. These recommendations have been developed and checked by independent scientific organisations through regular and thorough evaluations of scientific studies. To guarantee the safety of all persons, regardless of age and health, the limits include a significant safety buffer.

Before radio devices can be put in circulation, their agreement with European laws or limits must be confirmed; only then may the CE symbol be applied.

The unit of measurement for the European Council’s recommended limit for mobile telephones is the "Specific Absorption Rate" (SAR). This SAR limit is 2.0 W/kg, averaged over 10g of body tissue. It meets the requirements of the International Commission on Non-Ionizing Radiation Protection (ICNIRP) and was included in the European Standard EN 50360 for mobile radio devices. The SAR regulation for mobile telephones is in line with European Standard EN 50361.The maximum SAR value is calculated at the highest output level in all frequency bands of the mobile telephone. During use, the actual SAR level is usually much lower than the maximum value, because the mobile telephone works in different output levels. It only transmits with as much output as is required to reach the network. In general the following applies: The closer you are to a base station, the lower the transmission output of your mobile telephone.

The highest SAR value for this device, measured in accordance with the standard, is ??? W/kg.

???You can find the SAR value for this device in the Internet at ???. Even if the SAR value differs depending on the device and the position used, all Fujitsu Siemens devices comply with the legal requirements.

FCC Regulations:

●This device complies with part 15 of the FCC Rules. Operation is subject to the following two conditions: (1) This device may not cause harmful interference, and (2) this device must accept any interference received, including interference that may cause undesired operation.

●This device has been tested and found to comply with the limits for a Class B digital device, pursuant to Part 15 of the FCC Rules. These limits are designed to provide reasonable protection against harmful interference in a residential installation. This equipment generates, uses and can radiated radio frequency energy and, if not installed and used in accordance with the instructions, may cause harmful interference to radio communications. However, there is no guarantee that interference will not occur in a particular installation If this equipment does cause harmful interference to radio or television reception, which can be determined by turning the equipment off and on, the user is encouraged to try to correct the interference by one or more of the following measures:

-Reorient or relocate the receiving antenna.
-Increase the separation between the equipment and receiver.
-Connect the equipment into an outlet on a circuit different from that to which the receiver is connected.
-Consult the dealer or an experienced radio/TV technician for help.

Changes or modifications not expressly approved by the party responsible for compliance could void the user‘s authority to operate the equipment.

RF Exposure Information (SAR)

This device meets the government's requirements for exposure to radio waves. This device is designed and manufactured not to exceed the emission limits for exposure to radio frequency (RF) energy set by the Federal Communications Commission of the U.S. Government.

The exposure standard for wireless devices employs a unit of measurement known as the Specific Absorption Rate, or SAR. The SAR limit set by the FCC is 1.6W/kg. *Tests for SAR are conducted using standard operating positions accepted by the FCC with the device transmitting at its highest certified power level in all tested frequency bands. Although the SAR is determined at the highest certified power level, the actual SAR level of the device while operating can be well below the maximum value. This is because the device is designed to operate at multiple power levels so as to use only the poser required to reach the network. In general, the closer you are to a wireless base station antenna, the lower the power output.

The highest SAR value for the device as reported to the FCC when tested for use at the ear is 0.246 W/kg (PCS Head) for model T830, and 0.111 W/kg (PCS Head) for model T810, and when worn on the body, as described in this user guide, is 0.987 W/kg(PCS Body), and 0.029 W/kg (WLAN Body) for model T830, and 0.91 W/kg (PCS Body), and 0.042 W/kg (WLAN Body) for model T810. (Body-worn measurements differ among device models, depending upon available enhancements and FCC requirements.)

While there may be differences between the SAR levels of various devices and at various positions, they all meet the government requirement.

The FCC has granted an Equipment Authorization for this device with all reported SAR levels evaluated as in compliance with the FCC RF exposure guidelines. SAR information on this device is on file with the FCC and can be found under the Display Grant section of http://www.fcc.gov/oet/fccid after searching on FCC ID: QQXUPX001.

For body worn operation, this device has been tested and meets the FCC RF exposure guidelines for use with an accessory that contains no metal and the positions the handset a minimum of 1.5 cm from the body. Use of other enhancements may not ensure compliance with FCC RF exposure guidelines. If you do no t use a body-worn accessory and are not holding the device at the ear, position the handset a minimum of 1.5 cm from your body when the device is switched on.

Index

2 Megapixel Autofokus Kamera 5
3-Wege-Scrolltaste
    verwenden 12
3-Wege-Scrolltaste 5
Accessories 20
ActiveSync
    Datensynchronisation 28
ActiveSync installieren 27
ActiveSync-Partnerschaft aufbauen 28
Akku
    aufladen 54
    einsetzen 21
    entlädt sich 93
    Kapazität 4
    lagern 4
    technische Daten 98
    über Docking-Station aufladen 55
    über Netzadapter aufladen 54
    über USB-Anschluss aufladen 56
Akku-Betriebsdauer optimieren 56
Alarme
    einstellen 60
Annehmen-Taste 5
Anruf
    tätigen 33
Anzeige
    Bluetooth 6
    GPS 6
    Nachricht 6
Application button: switch on 49
Applikationstaste
    Kalender-Taste 5
    Kamera 5
    Posteingang 5
    SpeedMenu 5
Applikationstasten
    verwenden 14
Auslieferungszustand 51
Ausschalten 50
Ausschaltzeit 49
Battery
    inserting 22
Bedienelemente 8
Bedienung, grundlegend 24
Bildschirmtastatur
    verwenden 16
Bluetooth 86
    aktivieren 85
    Anzeige 6
CE-Kennzeichnung 102
CONNECTMOBILITY-E2C 25
    starten 25
Daten
    technische 97
Datensynchronisation
    über Docking-Station 30
Datensynchronisation über ActiveSync 28
Datenübertragung
    Bluetooth 86
    Wireless LAN 85
Datum
    einstellen 60
Datum stimmt nicht 91
Description of buttons 8
Display 5
    bleibt dunkel 91
    Reflexionsblendung 92
    reinigen 53
    verwenden 11
Display kalibrieren 24
Displayanzeige, schlecht lesbar 92
Displaybeleuchtung
    konfigurieren 88
Docking-Station verwenden 29
Drahtlose Datenübertragung 85, 86
Dunkles Display 91
Eingehendes Gespräch 34
Einschalten 50
Elektromagnetische Verträglichkeit 102
E-mail 65
E-Mail
    erstellen 65, 66
    konfigurieren 65
    SMTP 65
    versenden 66
    VPN-Firmennetz 65
E-Mail-Pull 66
E-Mail-Push 67
    Geräteverhalten 88
E-Mail-Versand
    über ActiveSync 66
Ende-Taste 5
    ausschalten 49
    einschalten 49
    reagiert nicht 93
Energiespar-Möglichkeiten 87
Energieverwaltung optimieren 87
Entgangene Anrufe
    anzeigen 34
Entsorgung 101
Erst-Start 23
Erweiterungskarte 57
    einsetzen 57
    entnehmen 58

Exchange Server
Daten synchronisieren 27
Datensynchronisation 26
konfigurieren 26
Falsches Datum/Uhrzeit 91
Fehlerbehebung 91
FN-Modus 9
Freisprechfunktion 37
FSC GPSLocator 71
FSC KeyLock 83
FSC MobileZip 79
FSC SecureLock 83
FSC SpeedMenu 60
Funkanzeige 5, 6
Funkkomponenten
aktivieren 85
Geräteeinstellung konfigurieren 60
Geräteinformationen 94
Gerätesperre 8, 82
Geräteverhalten bei E-Mail-Push 88
Gespräch
beenden 34
halten 38
GPS 71
Anzeige 6
GSM-Anschluss 5
Halten
Gespräch 38
Hardware, Überblick 5
Helles Display 92
Heute-Bildschirm 24
Hintergrundbild
einstellen 60
Hinweise
CE-Kennzeichnung 102
Entsorgung 101
Reinigung 53
Sicherheit 3
Hotline/Help Desk 94
IMEI-Nummer 95
Inbetriebnahme 21
Akku einbauen 22
Display 24
Erst-Start 23
grundlegende Bedienung 24
Heute-Bildschirm 24
Netzadapter anschließen 23
Indicator
battery charge level 6
Installation, neue Software 91
Internet
CONNECTMOBILITY-E2C 25
nutzen 69
Internet Explorer 69
Intranet
CONNECTMOBILITY-E2C 25
Java-Anwendungen
anzeigen 78
JBlend
Java 78
Kaltstart 51
Kamera
Bilder aufnehmen 73
Einstellungen 74
verwenden 73
Videos aufnehmen 74
Kein Ton 94
Kennwortschutz unter Pocket-PC 82
Key combinations 10
Konfigurieren
Telefoneinstellungen 44
Kontakte 42
Kurzwahl 36
Lagerung, Akku 4
Lautstärke
Profile 47
Lautstärke, minimal 94
Mailbox
einrichten 45
Menü
anpassen 60
Mikrofon 5
Mini-USB-Anschluss 5
MMS
konfigurieren 63
versenden 63
Modi
Profile 47
Nachrichten
erstellen 61
Navigationskreuz 5
verwenden 12
Netzadapter
mit Netzadapterleitung an Pocket-PC 55
technische Daten 99
Netzwerk
auswählen 44
Notational conventions 2
Nummer SMS-Service-Center-Zentrale
einrichten 45
Online-Hilfe
verwenden 31
Online-Tasten für Telefonie
verwenden 11
Operating elements 5
Optische Anzeigen
Profile 47
PDF Viewer 77
PDF-Dateien

anzeigen 77
PIN 43
eingeben 24
Pocket-PC
arbeitet nicht 93
ausschalten 48
bedienen 47
einschalten 23, 48
mit Computer verbinden 28
Nutzung während der Fahrt 52
Nutzung während des Flugs 52
reinigen 53
schaltet sich aus 92
startet nicht 92
transportieren 52
verbinden mit anderen Geräten 85
vernetzen 85
zurücksetzen 50
Pocket-PC ausschalten 50
Pocket-PC einschalten 50
Ports 5
Posteingang 61
E-Mail 61
MMS 61
SMS 61
Power adapter
connecting 23
Power-on indicator 5, 6
Problemlösungen 91
Profile 47
auswählen 48
konfigurieren 48
Programme
ClearVue PDF 77
FSC MobileZip 79
Windows Media Player 77
Recycling 101
Reinigung 53
Rufumleitung
einrichten 46
Safety notes 3
Schlechte Displayanzeige 92
Schlechter GPS-Empfang 94
Schneller Programmzugriff 60
SD-Steckplatz 5
Short Cuts 10
Sicherheit 81
Signs and symbols 2
Silent-Mode 9, 47
SIM Lock 43
SIM-Karte
einsetzen 21
sperren 44
SIM-Karten Manager 42
SIM-Kontakte 42
verwalten 42
SIM-Sicherheit 43
SMS
erstellen 62
SMS-Service-Center-Zentrale
einrichten 45
Softkey-Tasten
verwenden 14
Soft-Reset
durchführen 50
Software
Neu-Installation 91
Überblick 18
Sommerzeit 91
Sprachnotiz 5
Sprachwahl 35
Standby-Modus 49
Status
Akkuladezustand 6
Nachricht 6
Status indicator 5
Stift
herausnehmen 23
Störungsbehebung 91
Stummschalten
Telefon 38
Stylus: using 11
Tastatur 8
Technische Daten 97
Akku 98
Netzadapter 99
Pocket-PC 97
Telefon
Einstellungen 44
stummschalten 38
verwenden 33
Telefonbuch 42
Telefoneinstellungen
konfigurieren 44
Telefonfunktionen 33
Telefonkonferenz 39
Telefonnetz auswählen 44
Tipps 91
Töne
einstellen 60
Transport 52
Überblick
Hardware 5
Software 18
Uhrzeit
einstellen 60
stimmt nicht 91
USB-Datentransfer 59
USB-Host

Pocket-PC als USB-Host verwenden 59
VGA-Kamera 5
Videotelefonat 40
Voice Commander 35
Warmstart 50
Windows Media Player 77
Winterzeit 91
Wireless LAN 85
aktivieren 85
Wireless Manager 89
WLAN 85
aktivieren 85
Zeit stimmt nicht 91
Zurücksetzen 50, 51