ITS Intertek Testing Services
ETL SEMKO

TEST REPORT

Report Number: 30349051
Project Number: 3034905 & 3033726

Date of Test: November 10 to 12, 2002
Report Date: November 20, 2002

Testing performed on the
Vehicle Mounted Tracking System
Model: CDMA2000AGenT
FCC ID: QQZCDMA2000AGENT

to
FCC Parts 22 and 24

for
Coleman Technologies, Inc.

Test Performed by:
Intertek Testing Services
1365 Adams Court
Menlo Park, CA 94025

Test Authorized by:
Coleman Technologies.
20 N. Orange Avenue, Suite 300
Orlando, FL 32801

Prepared by: _____ **Date:** 12/20/02
Suresh Kondapalli

Reviewed by: David Chernomordik **Date:** 12/20/02
David Chernomordik
EMC Technical Manager

All services undertaken are subject to the following general policy: Reports are submitted for exclusive use of the client to whom they are addressed. Their significance is subject to the adequacy and representative character of the samples and to the comprehensiveness of the tests, examinations or surveys made. This report shall not be reproduced except in full, without written consent of Intertek Testing Services NA Inc. This report must not be used to claim product endorsement by A2LA, NIST nor any other agency of the U.S. Government.

TABLE OF CONTENTS

1.0 Introduction 4
1.1 Test Summary 4
1.2 Product Description 5
1.3 Test Configuration 6
1.4 Related Submittal(s) Grants 6

2.0 RF Power Output 7
2.1 Test Procedure 7
2.2 Test Equipment 7
2.3 Test Results 7

3.0 Radiated Power 14
3.1 Test Procedure 14
3.2 Test Result 14

4.0 Occupied Bandwidth 15
4.1 Test Procedure 15
4.2 Test Equipment 15
4.3 Test Results 15

5.0 Out of Band Emissions at Antenna Terminals 18
5.1 Test Procedure 18
5.2 Test Equipment 18
5.3 Test Results 18

6.0 Field Strength of Spurious Radiation 19
6.1 Test Procedure 19
6.2 Test Equipment 19
6.3 Test Results 19

7.0 Line Conducted Emissions 20
7.1 Test Procedure 20
7.2 Test Equipment 20
7.3 Test Results 20

8.0 Frequency Stability vs Temperature 21
8.1 Test Procedure 21
8.2 Test Equipment 21
8.3 Test Results 22

9.0 Frequency Stability vs Voltage 23

9.1 Test Procedure 23
9.2 Test Equipment 23
9.3 Test Results. 23

10.0 List of test Equipment 24

11.0 Miscellaneous Comments 25

11.0 Document History 26

12.0 Appendix A – Radiated Emissions Test Data 27

13.0 Appendix B - Out of Band Emissions 31

1.0 Introduction

1.1 Test Summary

FCC RULE	DESCRIPTION OF TEST	RESULT	PAGE
2.1046	RF Power Output	Complies 23 dBm - average 27 dBm - peak	7
22.913, 24.232	ERP, EIRP	Complies	14
2.1047	Modulation Requirements	Not Applicable	-
2.1049	Occupied Bandwidth, Emission Designator	1M25F9W	15
2.1051, 22.901(d) 22.917(f), 24.238(a)	Out of Band Emissions at Antenna Terminals Mobile Emissions In Base Frequency Range	Complies	18
2.1053	Field Strength of Spurious Radiation	Complies	20
15.107	Line Conducted Emissions	Not Applicable	-
2.1055	Frequency Stability vs. Temperature	Complies	23
2.1055	Frequency Stability vs. Voltage	Complies	25
2.1091	RF Exposure	Complies	*

* See file "RF exposure info"

1.2 Product Description

The Coleman Technologies, Inc. Model: CDMA2000AGenT is Vehicle Mounted Tracking device.

For more information, please refer to the attached product description.

Applicant	Coleman Technologies, Inc.,
Trade Name & Model No.	Coleman Technologies/ CDMA2000AGenT
Manufacturer Name & Address	Coleman Technologies, Inc., 20 N. Orange Avenue, Suite 300 Orlando, FL 32801
Contact:	Peter Stern: Phone 407/481-8600, FAX: 407/481-8618
FCC Identifier	QQZCDMA2000AGENT
Use of Product	Vehicle Mounted Tracking System
Whether quantity (>1) production is planned	[X] Yes, [ ] No
Type(s) of Emission	1M25F9W
Rated RF Output	824-849 MHz, 23 dBm (Average) 1850-1910 MHz, 23 dBm (Average)
Frequency Range	824 - 849 MHz, 1850 - 1910 MHz
Number of Channel(s)	
Antenna(s) & Gain,	8 dBi maximum in Cellular Band 5.5 dBi maximum in PCS Band
Detachable antenna?	[X]Yes [ ] No
Receiver L.O. frequency **External input**	 [] Audio [X] Digital Data

1.3 Test Configuration

Item #	Description	Make	Model No.	Serial No.
1	EUT	Coleman Technologies	CDMA2000AGenT	Not labeled
2	Laptop	Compaq	Armada 1750	6333/T/6400/D/M/1
3	Power supply			D30030012

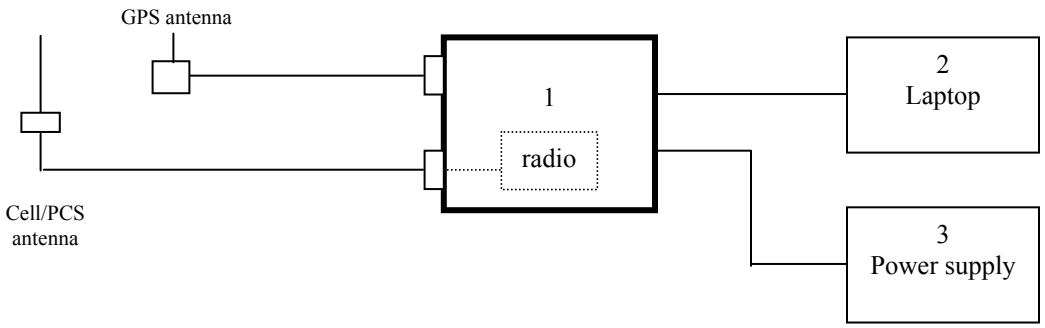

1.4 Related Submittal(s) Grants

None

2.0 RF Power Output

FCC 2.1046

2.1 Test Procedure

The transmitter output was connected to the Average Power Meter. The output power was adjusted to 23 dBm. The transmitter output was connected a calibrated coaxial attenuator, the other end of which was connected to a spectrum analyzer. The resolution and video bandwidths of the spectrum analyzer were set up to 10 MHz and 7 MHz accordingly. The peak power at the transmitter output was determined by adding the value of the attenuator and cable loss to the spectrum analyzer reading. Additional plots were made with 30 kHz resolution bandwidth and 300 Hz video bandwidth what corresponds to average value if bandwidth correction factor of 16 dB is added.

Tests were performed at three frequencies (low, middle, and high channels) in Cellular in PCS bands.

2.2 Test Equipment

Gigatronics 8542 Power Meter
Tektronix 2784 Spectrum Analyzer, 100 Hz – 40 GHz
10 dB Attenuator

2.3 Test Results

Frequency (MHz)	Average Power (dBm)	Measured Peak Power (dBm)
825.25	23.0	26.8
836.5	23.0	26.9
847.75	23.0	27.1
1851.25	23.0	26.9
1880.0	23.0	27.0
1908.75	23.0	26.8

For more details refer to the attached plots:

Cellular Band (CDMA Mode)	
Plot Number	**Description**
2.1	Low Channel
2.2	Middle Channel
2.3	High Channel
PCS Band (CDMA Mode)	
Plot Number	**Description**
2.4	Low Channel
2.5	Middle Channel
2.6	High Channel

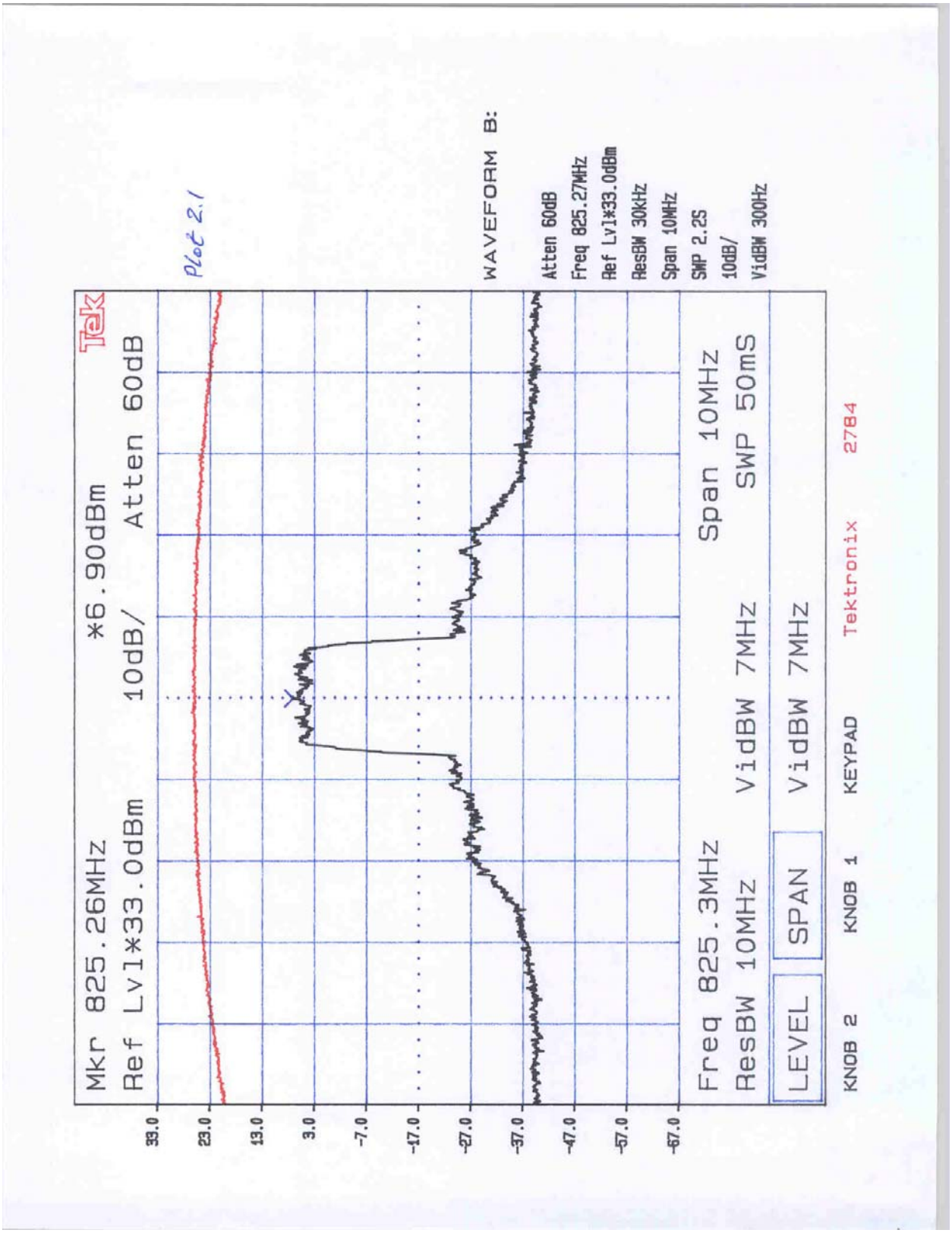
Plot 2.1
Tek
Mkr 825.26MHz
Ref Lvl*33.0dBm
*6.90dBm
10dB/
Atten 60dB
33.0
23.0
13.0
3.0
-7.0
-17.0
-27.0
-37.0
-47.0
-57.0
-67.0
WAVEFORM B:
Atten 60dB
Freq 825.27MHz
Ref Lvl*33.0dBm
ResBW 30kHz
Span 10MHz
SWP 2.2S
10dB/
VidBW 300Hz
Freq 825.3MHz
ResBW 10MHz
VidBW 7MHz
Span 10MHz
SWP 50mS
VidBW 7MHz
LEVEL
SPAN
KNOB 2
KNOB 1
KEYPAD
Tektronix
2784

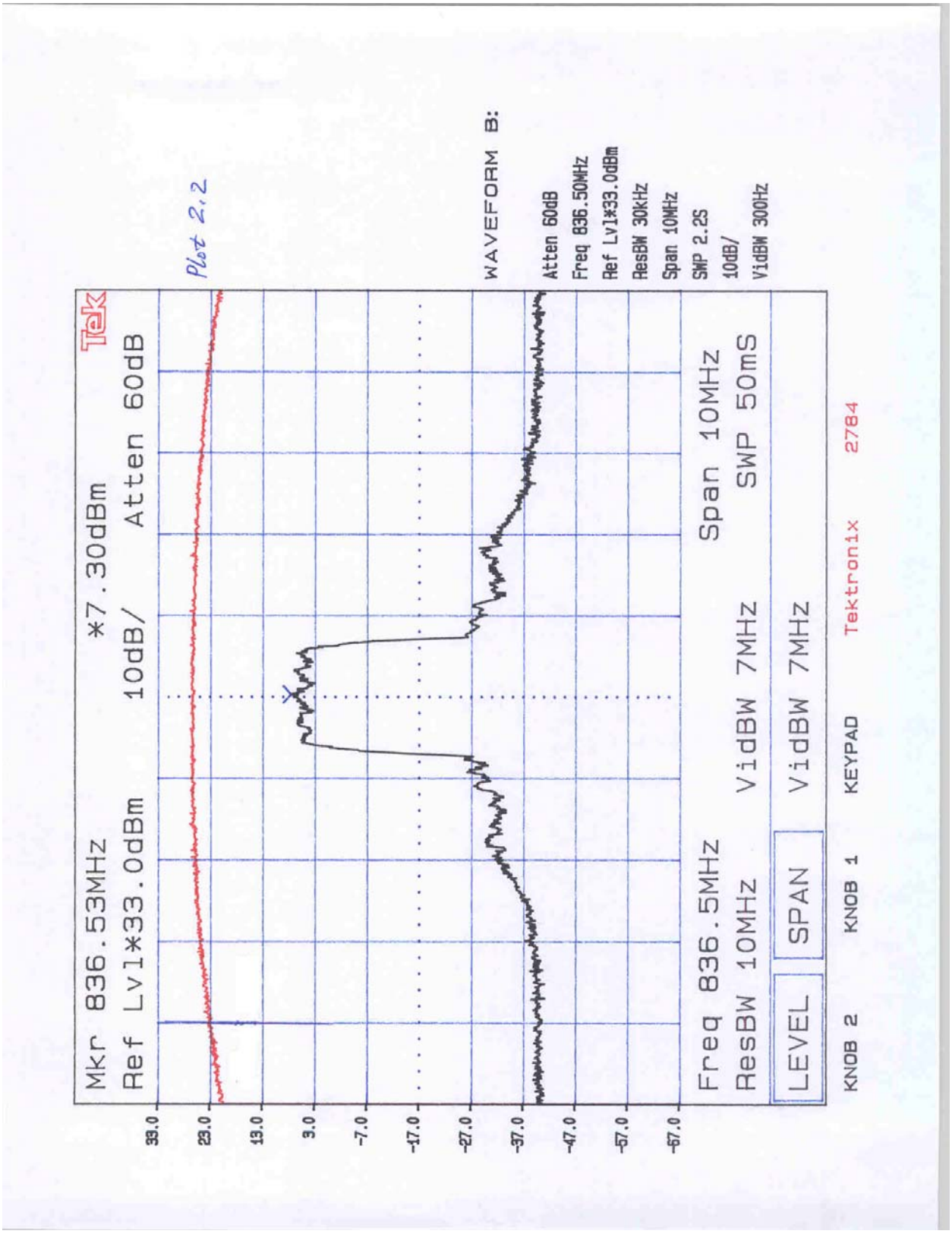
Plot 2.2
Tek
Mkr 836.53MHz
Ref Lvl*33.0dBm
*7.30dBm
10dB/
Atten 60dB
33.0
23.0
13.0
3.0
-7.0
-17.0
-27.0
-37.0
-47.0
-57.0
-67.0
WAVEFORM B:
Atten 60dB
Freq 836.50MHz
Ref Lvl*33.0dBm
ResBW 30kHz
Span 10MHz
SWP 2.2S
10dB/
VidBW 300Hz
Freq 836.5MHz
ResBW 10MHz
VidBW 7MHz
Span 10MHz
SWP 50mS
VidBW 7MHz
LEVEL
SPAN
KNOB 2
KNOB 1
KEYPAD
Tektronix
2784

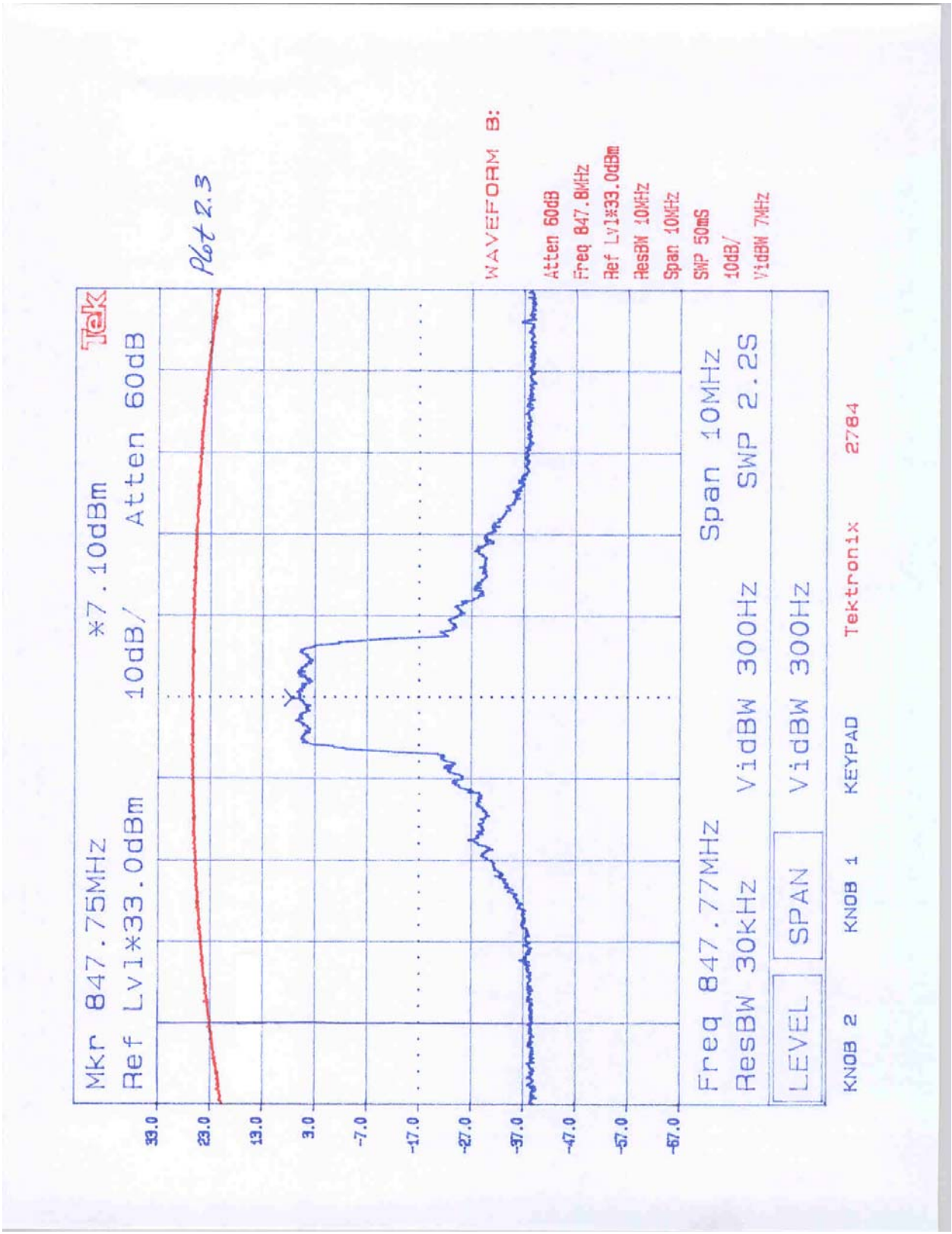
Plot 2.3
Tek
Mkr 847.75MHz
Ref Lvl*33.0dBm
*7.10dBm
10dB/
Atten 60dB
33.0
23.0
13.0
3.0
-7.0
-17.0
-27.0
-37.0
-47.0
-57.0
-67.0
WAVEFORM B:
Atten 60dB
Freq 847.8MHz
Ref Lvl*33.0dBm
ResBW 10MHz
Span 10MHz
SWP 50mS
10dB/
VidBW 7MHz
Freq 847.77MHz
ResBW 30kHz
VidBW 300Hz
Span 10MHz
SWP 2.2S
VidBW 300Hz
LEVEL
SPAN
KNOB 2
KNOB 1
KEYPAD
Tektronix
2784

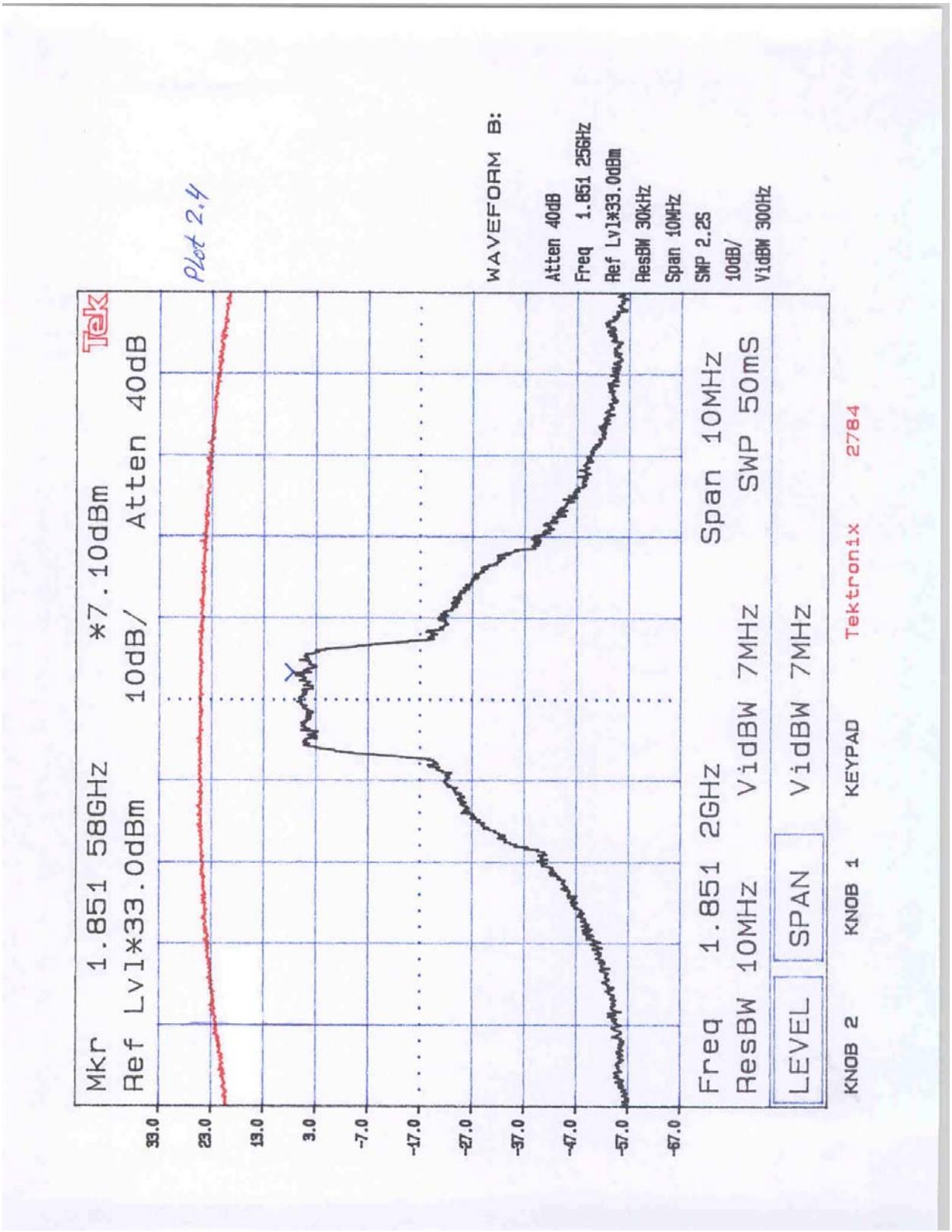
Plot 2.4
Tek
Mkr 1.851 58GHz *7.10dBm
Ref Lvl*33.0dBm 10dB/ Atten 40dB
33.0
23.0
13.0
3.0
-7.0
-17.0
-27.0
-37.0
-47.0
-57.0
-67.0
WAVEFORM B:
Atten 40dB
Freq 1.851 25GHz
Ref Lvl*33.0dBm
ResBW 30kHz
Span 10MHz
SWP 2.2S
10dB/
VidBW 300Hz
Freq 1.851 2GHz
ResBW 10MHz VidBW 7MHz
Span 10MHz
SWP 50mS
LEVEL SPAN VidBW 7MHz
KNOB 2 KNOB 1 KEYPAD Tektronix 2784

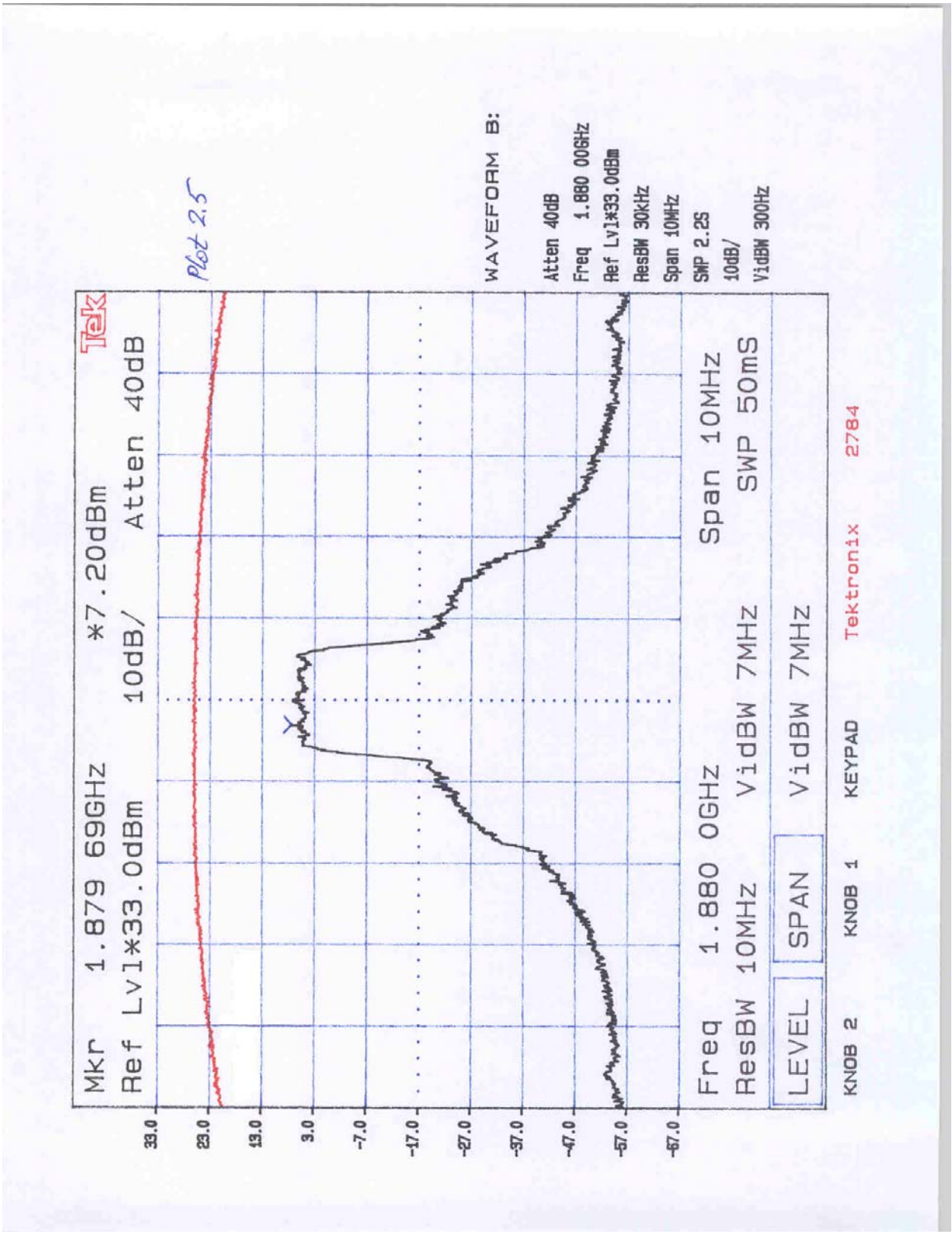
Plot 2.5
Tek
Mkr 1.879 69GHz *7.20dBm
Ref Lvl*33.0dBm 10dB/ Atten 40dB
33.0
23.0
13.0
3.0
-7.0
-17.0
-27.0
-37.0
-47.0
-57.0
-67.0
WAVEFORM B:
Atten 40dB
Freq 1.880 00GHz
Ref Lvl*33.0dBm
ResBW 30kHz
Span 10MHz
SWP 2.2S
10dB/
VidBW 300Hz
Freq 1.880 0GHz
ResBW 10MHz VidBW 7MHz
Span 10MHz
SWP 50mS
LEVEL SPAN VidBW 7MHz
KNOB 2 KNOB 1 KEYPAD Tektronix 2784

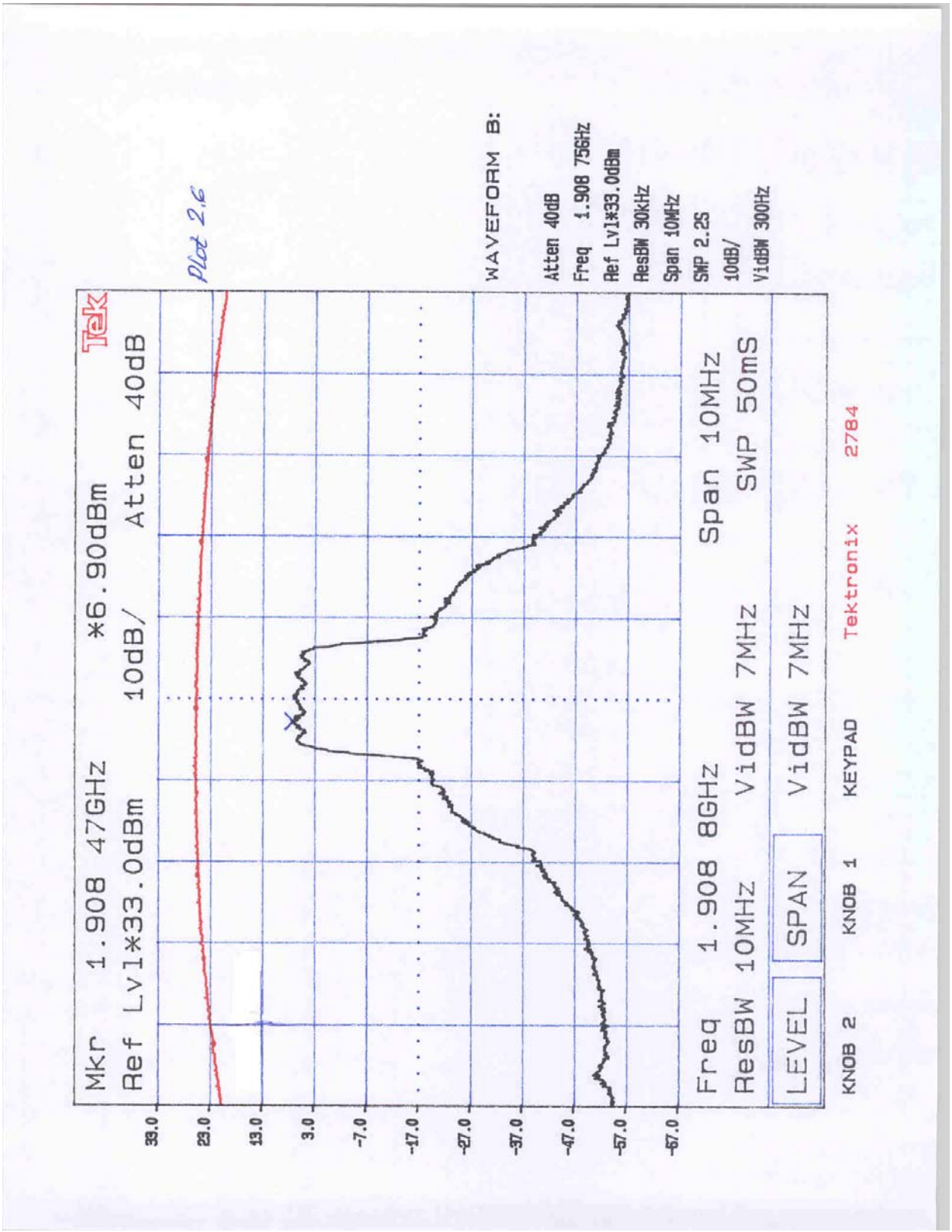
Plot 2.6
Tek
Mkr 1.908 47GHz *6.90dBm
Ref Lvl*33.0dBm 10dB/ Atten 40dB
33.0
23.0
13.0
3.0
-7.0
-17.0
-27.0
-37.0
-47.0
-57.0
-67.0
WAVEFORM B:
Atten 40dB
Freq 1.908 75GHz
Ref Lvl*33.0dBm
ResBW 30kHz
Span 10MHz
SWP 2.2S
10dB/
VidBW 300Hz
Freq 1.908 8GHz
ResBW 10MHz
VidBW 7MHz
Span 10MHz
SWP 50mS
VidBW 7MHz
LEVEL
SPAN
KNOB 2
KNOB 1
KEYPAD
Tektronix
2784

3.0 Radiated Power

FCC 22.913

The Effective Radiated Power (ERP) of mobile transmitters and auxiliary test transmitters must not exceed 7 Watts.

FCC 24.232

The Equivalent Isotropic Radiated Power (EIRP) must not exceed 2 Watts.

3.1 Test Procedure

The ERP/EIRP was calculated by adding the antenna gain (in dBd or dBi) to the output power in dBm.

3.2 Test Result

The antenna supplied with the device has a gain of 3 dBi. However, according to Installation Guide, the maximum allowed antenna gain is: 8 dBi for the Cellular band and 5.5 dBi for the PCS bang. Therefore,

In the band 824-849 MHz

The maximum ERP = 28.9 dBm (average)

The maximum ERP = 33.0 dBm (peak)

In the band 1850-1910 MHz

The maximum EIRP = 28.5 dBm (average)

The maximum EIRP = 32.5 dBm (peak)

Complies	

4.0 Occupied Bandwidth

FCC 2.1049

4.1 Test Procedure

The transmitter output was connected to a calibrated coaxial attenuator, the other end of which was connected to a spectrum analyzer. The Occupied Bandwidth (defined as the 99% Power Bandwidth) was measured with HP8546A Spectrum Analyzer.

4.2 Test Equipment

Hewlett Packard HP8546A Spectrum Analyzer

4.3 Test Results

See attached plots 4.1 and 4.2. The test result shows that the bandwidth is 1.288 MHz, which is 3% higher than the theoretical bandwidth for CDMA - 1.25 MHz. The Emission Designator was determined as 1M25F9W.

Plot 4.1
MARKER Δ
1.275 MHz
.17 dB
ACTV DET: PEAK
MEAS DET: PEAK QP AVG
MKRΔ 1.275 MHz
.17 dB
Last Hrd
Key Menu
SPAN
99%
PWR BW
%
AM
3rd ORD
MEAS
DELTA
MEAS
PK-PK
MEAS
More
2 of 2
LOG
10
dB/
#ATN
40 dB
REF OFFST 3.0 dB
REF 18.0 dBm
WA SB
SC FC
CORR
CENTER 836.500 MHz
#IF BW 30 kHz
#AVG BW 300 Hz
SPAN 2.000 MHz
SWP 667 msec

Plot 4.2
MARKER Δ
1.285 MHz
-.75 dB
LOG
10
dB/
#ATN
40 dB
REF OFFST 3.0 dB
REF 18.0 dBm
ACTV DET: PEAK
MEAS DET: PEAK QP AVG
MKRΔ 1.285 MHz
-.75 dB
WA SB
SC FC
CORR
CENTER 1.880000 GHz
#IF BW 30 kHz
#AVG BW 300 Hz
SPAN 2.000 MHz
SWP 667 msec
Last Hrd
Key Menu
SPAN
99%
PWR BW
%
AM
3rd ORD
MEAS
DELTA
MEAS
PK-PK
MEAS
More
2 of 2

5.0 Out of Band Emissions at Antenna Terminals

FCC 22.901(d), 22.917(e), 22.917(f), 24.238(a)

Out of Band Emissions:

The mean power of emissions must be attenuated below the mean power of the unmodulated carrier (P) on any frequency outside the frequency band by at least (43 + 10 log P) dB.

Mobile Emissions in Base Frequency Range:

The mean power of any emissions appearing in the base station frequency range from cellular mobile transmitters operated must be attenuated to a level not to exceed -80 dBm at the transmit antenna connector.

5.1 Test Procedure

The RF output of the transmitter was connected to a spectrum analyzer through appropriate attenuation. Sufficient scans were taken to show the out-of-band Emissions, if any, up to 10th harmonic.

5.2 Test Equipment

Tektronix 2784 Spectrum Analyzer

5.3 Test Results

Complies	Refer to the plots in Appendix B.

6.0 Field Strength of Spurious Radiation

FCC 2.1053, 22.901(d), 24.238(a)

6.1 Test Procedure

The measurement antenna was placed at a distance of 3 meters from the EUT. During the tests, the antenna height and polarization as well as EUT azimuth were varied in order to identify the maximum level of emissions from the EUT.

The frequency range up to tenth harmonic of each of the three fundamental frequency (low, middle, and high channels) for each band (cellular and PCS) was investigated. The tests were performed with the Radio Card installed in Laptop and PDA for both polarization of the transmitter's antenna (antenna in vertical and horizontal position). The worst case of emissions was reported.

For spurious emissions attenuation, the substitution method was used. On each frequency where the Field Strength was found above 63.4 dBuV/m (which corresponds to ERP = -33 dBm), the EUT was substituted by a reference antenna (half-wave dipole - below 1 GHz, or Horn antenna - above 1GHz), connected to a signal generator. The signal generator output was adjusted to obtain the same reading as from EUT. The ERP/EIRP at the spurious emissions frequency was calculated as in section 3. The spurious emissions attenuation was calculated as the difference between ERP/EIRP at the fundamental frequency (see section 3) and at the spurious emissions frequency.

The emissions from the digital part and receiver of the EUT were measured as well. The test data is presented in the separate FCC Verification Report.

6.2 Test Equipment

EMCO 3115 Horn Antennas
HP 8566B Spectrum Analyzer
Tektronix 2784 Spectrum Analyzer
Low Pass Filter
Preamplifiers

6.3 Test Results

All spurious emissions are attenuated more than 20 dB than the required attenuation limit. Therefore measurements by the substitution method were not performed.
Refer to the field strength data sheets in Appendix A

Test Result:	Complies

7.0 Line Conducted Emissions

FCC 15.107

7.1 Test Procedure

Test procedure described in the ANSI C63.4 Standard was employed. The EUT was connected to a DC power Supply which was connected to the AC line through the LISNs. Both HOT and NEUTRAL leads were tested.

7.2 Test Equipment

HP8568A Spectrum Analyzer with 85650 Quasi-peak adapter
Solar Electronics 8028-50-TS-24-BNC LISNs

7.3 Test Results

Test is not applicable. The EUT is used in an automobiles and battery powered only

8.0 Frequency Stability vs Temperature
FCC 2.1055

8.1 Test Procedure

Sierra Wireless Inc personnel performed the test.

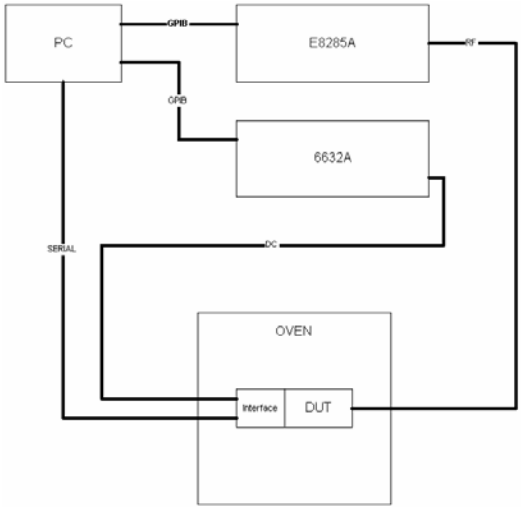

Test Setup Block Diagram

The Sierra Wireless SB555 module was placed inside the temperature chamber. After the temperature stabilized for approximately 20 minutes, the transmitting frequency was recorded.

8.2 Test Equipment

Aglient Wireless Test Set, model 8960
HP E3631A DC Power Supply

8.3 Test Results

Test Result:	Complies. Emission attenuation on the band-edges frequencies of the frequency block is not affected by the measured frequency instability.

Transmitting Frequency: 1880 MHz
Frequency error limit: 2.5 ppm or 4700 Hz

Temperature (°C)	Frequency Error (Hz)
-30	2.1
-20	4.0
-10	-2.1
0	0.5
10	2.7
20	2.9
30	4.7
40	-3.2
50	4.6

Note: The measured frequency stability vs. temperature for the Cellular band is identical (% difference) to the above table since the transmitting frequency is locked to the same oscillator.

9.0 Frequency Stability vs Voltage

FCC 2.1055

9.1 Test Procedure

Sierra Wireless Inc. personnel performed the test.

For the test setup block diagram, refer to sec. 8.

The Sierra Wireless SB555 module was connected to a DC Power Supply. The voltage was set to 115% of the nominal value and was then decreased to 85% of the nominal value. The output frequency was recorded for each voltage setting.

9.2 Test Equipment

Aglient Wireless Test Set, model 8960
HP E3631A DC Power Supply

9.3 Test Results.

Test Result:	Complies. Emission attenuation on the band-edges frequencies of the frequency block is not affected by the measured frequency instability.

Transmitting Frequency: 837 MHz
Frequency error limit: 2.5 ppm or 2092.5 Hz

Vcc, Volts	Difference (Hz)
2.805 *	-7.6
3.795 **	5.8

Transmitting Frequency: 1880 MHz
Frequency error limit: 2.5 ppm or 4700 Hz

Vcc, Volts	Difference (Hz)
2.805 *	-6.5
3.795 **	5.5

Note:

* 85% of the nominal voltage supplied to the modem,
** 115% of the nominal voltage supplied to the modem.

10.0 List of test Equipment

Measurement equipment used for emission compliance testing utilized the equipment on the following list:

Equipment	Manufacturer	Model/Type	Serial #	Cal Int	Cal Due
Bi-Log Antenna	EMCO	3143	9509-1160	12	9/19/03
Pre-Amplifier	Sonoma Inst.	310	185634	12	01/10/03
RF Filter Section	Hewlett Packard	85460A	3448A00267	12	7/16/03
EMI Receiver	Hewlett Packard	8546A	3710A00373	12	7/16/03
Spectrum Analyzer	Tektronix	2784	B3020108	12	8/08/03
Double-ridged Horn Antenna	EMCO	3115	9170-3712	12	6/02/03
Double-ridged Horn Antenna	EMCO	3115	8812-3049	12	4/03/03
Horn Antenna	EMCO	3160-09	-	#	#
Horn Antenna	EMCO	3160-10	-	#	#
Pre-Amplifier	Miteq	AMF-4D-001180-24-10P	799159	12	04/05/03
Pre-amplifier	CTT	ACO/400	47526	12	10/5/03
Wireless Test Set	Aglient	8960	GB41070182	12	06/27/03

No calibration required

11.0 Miscellaneous Comments

For setup photos see separate file "Set Up Photos"

11.0 Document History

Revision/ Job Number	Writer Initials	Date	Change
1.0 / 30349051	SS	December, 2002	Original document

12.0 Appendix A – Radiated Emissions Test Data

Radiated Emission Test Data

Test Result							
							10 November 2002
Test Mode: Tx, 824.75 MHz.				FCC Part 22 (Radiated Emission, Harmonics)			
Temperature: 21.0 C				Coleman Tech. Inc.			
Humidity: 51.0 %				Model: Vehicle Mounted Tracking System			
Frequency MHz	**Polarity**	**Spectrum analyzer reading dB(uV)**	**Cable loss (dB)**	**Pre-amplif. Gain dB**	**Ant.factor dB(1/m)**	**FS Level dB(uV/m)**	**Calculated ERP dBm**
1649.50	H	43.9	7.1	36.6	27.4	41.8	-55.6
2474.25	H	35.1	8.2	36.5	30.6	37.4	-60.0
3299.00	H	36.4	9.7	36.4	32.3	42.0	-55.4
4123.75	H	39.5	9.7	36.3	34.1	47.0	-50.4
4948.50	H	34.1	13.1	35.8	35.2	46.6	-50.8
5773.25	V/H	24.3*	11.3	35.3	36.4	36.7	-60.7
6598.00	V/H	24.3*	15.6	35.3	36.5	41.1	-56.3
7422.75	V/H	24.3*	13.0	35.4	37.9	40.0	-57.4
8247.50	V/H	24.3*	13.2	35.5	37.8	40.0	-57.4

Test Result							
							10 November 2002
Test Mode: Tx, 836.5 MHz.				FCC Part 22 (Radiated Emission, Harmonics)			
Temperature: 21.0 C				Coleman Tech. Inc.			
Humidity: 51.0 %				Model: Vehicle Mounted Tracking System			
Frequency MHz	**Polarity**	**Spectrum analyzer reading dB(uV)**	**Cable loss (dB)**	**Pre-amplif. Gain dB**	**Ant.factor dB(1/m)**	**FS Level dB(uV/m)**	**Calculated ERP DBm**
1673.0	H	45.2	7.1	36.6	27.7	43.4	-54.0
2509.5	H	35.2	8.2	36.5	30.7	37.6	-59.8
3346.0	H	35.5	10.1	36.4	32.4	41.6	-55.8
4182.5	H	32.4	9.7	36.3	34.1	39.9	-57.5
5019.0	H	29.2	13.5	35.8	35.3	42.2	-55.2
5855.5	V/H	23.4*	11.4	35.2	36.5	36.1	-61.3
6692.0	V/H	23.4*	14.6	35.3	36.6	39.3	-58.1
7528.5	V/H	23.4*	13.2	35.4	38.0	39.2	-58.2
8365.0	V/H	23.4*	13.1	35.4	37.8	38.9	-58.5

Test Result	
	10 November 2002
Test Mode: Tx, 847.75	FCC Part 22 (Radiated Emission, Harmonics)
Temperature: 21.0 C	Coleman Tech. Inc.
Humidity: 51.0 %	Model: Vehicle Mounted Tracking System

Frequency MHz	Polarity	Spectrum analyzer reading dB(uV)	Cable loss (dB)	Pre-amplif. Gain dB	Ant.factor dB(1/m)	FS Level dB(uV/m)	Calculated ERP dBm
1695.50	H	36.5	7.0	36.6	27.8	34.4	-63.0
2543.25	V/H	25.1*	8.2	36.5	30.8	27.6	-69.8
3391.00	H	26.3	10.2	36.4	32.5	32.4	-65.0
4238.75	H	32.7	9.9	36.3	34.1	40.4	-57.0
5086.50	V/H	22.6*	12.9	35.7	35.4	35.2	-62.2
5934.25	V/H	22.6*	11.4	35.2	36.5	35.3	-62.1
6782.00	V/H	22.6*	13.7	35.3	36.8	37.8	-59.6
7629.75	V/H	22.6*	13.4	35.4	38.0	38.4	-59.0
8477.50	V/H	22.6*	13.3	35.4	37.8	38.3	-59.1

a) RBw – 1 MHz, VBw – 1 KHz
b) * - Noise floor
c) Test was performer at 3 m.

Test Result								
								12 November 2002
Test Mode: Tx, 1851 MHz.					FCC Part 24 (Radiated Emission, Harmonics)			
Temperature: 21.0 C					Coleman Tech. Inc.			
Humidity: 51.0 %					Model: Vehicle Mounted Tracking System			
Frequency MHz	Spectrum analyzer reading dB(uV)	Polarity	Cable loss (dB)	Pre-amplif. Gain dB	Ant.factor dB(1/m)	Distance Factor dB	FS Level dB(uV/m)	Calculated ERP dBm
3702.0	7.2	V	6.4	0.0	32.5	0.0	46.1	-51.3
5553.0	18.2 *	V	8.3	36.7	36.1	0.0	25.9	-71.5
7404.0	14.7 *	V	10.2	36.0	38.0	0.0	26.9	-70.5
9255.0	14.5 *	V	10.9	37.2	40.2	0.0	28.4	-69.0
11106.0	37.0 **	V	7.2	36.3	40.7	9.5	39.1	-58.3
12957.0	36.0 **	V	7.8	37.2	41.1	9.5	38.2	-59.2
14808.0	36.0 **	V	8.4	36.1	41.1	9.5	39.9	-57.5
16659.0	30.0 **	V	9.0	35.8	41.3	9.5	35.0	-62.4
18510.0	24.0 **	V	9.6	35.6	40.2	9.5	28.7	-68.7

Test Result								
								12 November 2002
Test Mode: Tx, 1880 MHz.					FCC Part 24 (Radiated Emission, Harmonics)			
Temperature: 21.0 C					Coleman Tech. Inc.			
Humidity: 51.0 %					Model: Vehicle Mounted Tracking System			
Frequency MHz	**Spectrum analyzer reading dB(uV)**	**Polarity**	**Cable loss (dB)**	**Pre-amplif. Gain dB**	**Ant.factor dB(1/m)**	**Distance Factor dB**	**FS Level dB(uV/m)**	**Calculated ERP dBm**
3760.0	8.9	V	6.4	0.0	32.5	0.0	47.8	-49.6
5640.0	18.1 *	V	8.3	36.9	36.1	0.0	25.6	-71.8
7520.0	14.8 *	V	10.2	36.0	37.8	0.0	26.8	-70.6
9400.0	14.8 *	V	10.9	37.2	40.2	0.0	28.7	-68.7
11280.0	37.0 **	V	7.2	36.3	40.7	9.5	39.1	-58.3
13160.0	36.0 **	V	7.9	37.1	40.7	9.5	38.0	-59.4
15040.0	36.0 **	V	8.5	35.7	42.5	9.5	41.8	-55.6
16920.0	30.0 **	V	9.0	35.8	41.3	9.5	35.0	-62.4
18800.0	24.0 **	V	9.6	35.6	40.2	9.5	28.7	-68.7

a) RBw – 1 MHz, VBw – 1 KHz
b) * Noise floor
c) ** Test was performer at 1 m.

Test Result								
								12 November 2002
Test Mode: Tx, 1908.5 MHz					FCC Part 24 (Radiated Emission, Harmonics)			
Temperature: 21.0 C					Coleman Tech. Inc.			
Humidity: 51.0 %					Model: Vehicle Mounted Tracking System			
Frequency MHz	**Spectrum analyzer reading dB(uV)**	**Polarity**	**Cable loss (dB)**	**Pre-amplif. Gain dB**	**Ant.factor dB(1/m)**	**Distance Factor dB**	**FS Level dB(uV/m)**	**Calculated ERP dBm**
3817.0	7.3	H	6.4	0.0	32.1	0.0	45.8	-51.5
5725.5	18.1 *	V	8.3	36.9	36.1	0.0	25.6	-71.8
7634.0	14.0 *	V	10.2	36.1	37.8	0.0	25.9	-71.5
9542.5	14.4	H	10.9	37.2	39.0	0.0	27.1	-70.3
11451.0	37.0 **	V	7.2	36.3	40.7	9.5	39.1	-58.3
13359.5	36.0 **	V	7.9	37.1	40.7	9.5	38.0	-59.4
15268.0	36.0 **	V	8.5	35.7	42.5	9.5	41.8	-55.6
17176.5	30.0 **	H	9.2	36.1	43.0	9.5	36.6	-60.8
19085.0	24.0 **	V	9.8	35.6	40.2	9.5	28.9	-68.5

a) RBw – 1 MHz, VBw – 1 KHz
b) * Noise floor
c) ** Test was performer at 1 m.

13.0 Appendix B - Out of Band Emissions

Out of Band Emissions at Antenna Terminals

Refer to separate files