ESTECH Co., Ltd. 3rd Fl., Chungdam Bldg., 119-1 Chungdam-dong, Kangnamgu, Seoul	MIC KOLAS VCI FC	**Electromagnetic Interference Test Report**

Compliance Test Report for FCC

Report Number		ESTF150402-005		
Applicant	Company name	TECHSCAN KOREA CO., Ltd.		
	Address	2F, Mirae B/D, 779-19, Daerim-Dong, Yongdungpo-Gu, Seoul, Korea		
	Telephone	82-2-842-2211		
Product	Product name	BAR CODE SCANNER (READER)		
	Model No.	TSK-2000 SERIES	Manufacturer	TECHSCAN KOREA CO., Ltd.
	Serial No.	L2S300026	Country of origin	KOREA
Test date	2004-02-24		Date of issue	2004-02-26
Test location	ESTECH. Co., Ltd. 97-1 Hoiuk-Ri Majang-Myon, Icheon-city, KyungKi-Do, Korea			
Standard	FCC PART 15 2002 , ANSI C 63.4 2001			
Test item	■ Conducted Emission	☐ Class A ■ Class B	Test result	OK
	■ Radiated Emission	☐ Class A ■ Class B	Test result	OK
Measurement facility registration number		94696		
Tested by	Senior Engineer J.M. Yang		(Signature)	
Reviewed by	Director T.K. Lee		(Signature)	
Abbreviation	OK, Pass = Passed, Fail = Failed, N/A = not applicable			

* Note

- This is certified that the above mentioned producs have been tested for the sample provided by client
- No part of this document may be duplicated or reproduced by any means without the express written permission of the Estech Co., Ltd.

Contents

1. Laboratory Information ····· 3

2. Description of EUT ····· 4

3. Test Standards ····· 5

4. Measurement condition ····· 6

5. Measurement of radiated emission ····· 8

5.1 Measurement equipment ····· 8

5.2 Environmental conditions ····· 8

5.3 Test data ····· 9

6. Measurement of conducted emission ····· 10

6.1 Measurement equipment ····· 10

6.2 Environmental conditions ····· 10

6.3 Test data ····· 11

7. Photographs of test setup ····· 12

8. Photographs of EUT ····· 14

Appendix 1. Spectral diagram

Appendix 2. Phorographs of EUT in side PCB

Appendix 3. Block diagram of EUT

Appendix 4. Circuit Diagram

1. Laboratory Information

1.1 General

This EUT (Equipment Under Test) has been shown to be capable of compliance with the applicable technical standards and is tested in accordance with the measurement procedures as indicated in this report.
ESTECH attests to accuracy of test data. All measurement reported herein were performed by ESTECH Co., Ltd.
ESTECH assume full responsibility for the completeness of these measurements and vouch for the qualifications of all persons taking them.

1.2 Test Lab.

Corporation Name : ESTECH Co. Ltd

Head Office : 3 rd Fl., Chungdam Bldg., 119-1 Chungdam-dong Kangnam-gu , Seoul, Korea
(Safety & Telecom. Test Lab)

EMC Test Lab : 58-1 Osan-Ri, GaNam-Myon, YeoJoo-Gun, KyungKi-Do, Korea
97-1 Hoiuk-Ri Majang-Myon, Icheon-city, KyungKi-Do, Korea

1.3 Official Qualification(s)

FCC : Filed Laboratory at Federal Communications Commission

2. Description of EUT

2.1 Summary of Equipment Under Test

Product	: BAR CODE SCANNER (READER)
Model Number	: TSK-2000 SERIES
Serial Number	: L2S300026
Manufacturer	: TECHSCAN KOREA CO., Ltd.
Country of origin	: KOREA
Rating	: 5V DC
Receipt Date	: 2004-02-23

2.2 General descriptions of EUT

* Light Source : Visible Red (660nm)
* Skew Angle : ±65degree
* Scan Distance : 40-280mm
* Resolution : 4mil
* Storage Temp : -20 ~ +65℃
* Housing : ABS
* Weigh : 160g
* Scan Rate : 200Scan/sec
* Pitch Angle : ±50degree
* Field width : 140mm(15mil)
* Temp : 0 ~ 50℃ (operating)
* Ambient Light : 3,000 to 8,000lux
* Current : 28mA ~ 90mA
* IBM PC XT/AT/PS2 keyboard wedge

3. Test Standards

Test Standard : FCC PART 15 (2002)

This Standard sets out the regulations under which an intentional, unintentional, or incidental radiator may be operated without an individual license. It also contains the technical specifications, administrative requirements and other conditions relating to the marketing of Part 15 devices.

Test Method : ANSI C 63.4 (2001)

This standard sets forth uniform methods of measurement of radio-frequency (RF) signals and noise emitted from both unintentional and intentional emitters of RF energy in the frequency range 9 kHz to 40 GHz. Methods for the measurement of radiated and AC power-line conducted radio noise are covered and may be applied to any such equipment unless otherwise specified by individual equipment requirements. These methods cover measurement of certain decides that deliberately radiate energy, such as intentional emitters, but does not cover licensed transmitters. This standard is not intended for certification/approval of avionic equipment or for industrial, scientific, and medical (ISM) equipment These method apply to the measurement of individual units or systems comprised of multiple units

4. Measurement Condition

4.1 EUT Operation.

* The EUT was in the following operation mode during all testing
* The operational conditions of the EUT was determined by the manufacturer according to the typical use of the EUT with respect to the expected hightest level of emission
* After arranging EUT and peripheral device, artificially operation of bar code scannner switch and bar code continually output data.

4.2 Configuration and Peripherals

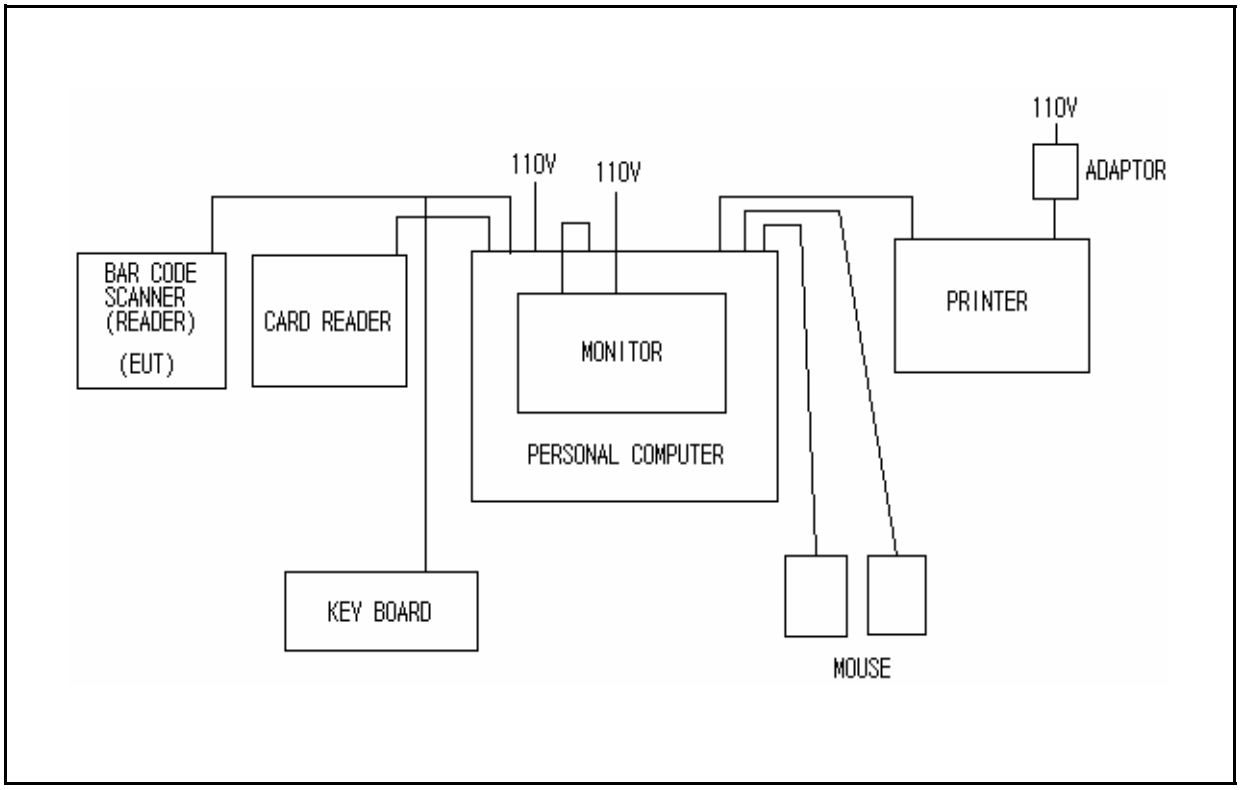

4.3 EUT and Support equipment

Equipment Name	Model Name	S/N	Manufacturer	Remark (FCC ID)
BAR CODE SCANNER (READER)	TSK-2000 SERIES	L2S300026	TECHSCAN KOREA CO., Ltd	EUT
PERSONAL COMPUTER	DHS(OPTIPLEX GX270)	NONE	DELL	-
MONITOR	D8897	CN11104168	HEWLETT PACKAD	-
PRINTER	C6414J	TH18M149P2	HEWLETT PACKAD	-
KEY BOARD	SEM-DT35	32006557	SAMSUNG ELECTRONICS CO., LTD	-
MOUSE	M-S48a	HCA31409057	LOGITECH	-
MOUSE	MSW-5	NONE	A4TECH	-
CARD READER	UR2060E	WR2A000870	NONE	-
ADAPTOR	C6409-60152	C1H14B	YOKOGAWA	-

4.4 Cable Connecting

Start Equipment		End Equipment		Cable Standard		Remark
Name	I/O port	Name	I/O port	Length	Shielded	
BAR CODE SCANNER (READER)	PS/2 KEYBOARD	PERSONAL COMPUTER	PS/2KEYBOARD	2.0	N	
BAR CODE SCANNER (READER)	PS/2 KEYBOARD	KEY BOARD	PS/2KEYBOARD	2.0	N	
PERSONAL COMPUTER	VIDEO	MONITOR	VIDEO	2.0	Y	
PERSONAL COMPUTER	PS/2 MOUSE	MOUSE	PS/2 MOUSE	2.0	N	
PERSONAL COMPUTER	PARALLEL	PRINTER	PARALLEL	2.0	Y	
PERSONAL COMPUTER	SERIAL	MOUSE	SERIAL	2.0	N	
PERSONAL COMPUTER	USB	CARD READER	USB	1.0	Y	
PRINTER	POWER	ADAPTOR	POWER	2.0	Y	

5. Measurement of radiated disturbance

Above 30 MHz Electric Field strength was measured in accordance with FCC Part 15 (2002) & ANSI C 63.4 (2001). The test setup was made according to FCC Part 15 (2002) & ANSI C 63.4 (2001) on an open test site, which allows a 3m distance measurement. The EUT was placed in the center of wooden turntable. The height of this table was 0.8m. The measurement was conducted with both horizontal and vertical antenna polarization. The turntable has fully rotated. For further description of the configuration refer to the picture of the test set-up.

5.1 Measurement equipments

Equipment Name	Type	Manufacturer	Serial No.	Next Calibration date
Receiver	ESPC	Rohde & Schwarz	845296/021	2004.6.17
Spectrum Analyzer	R3261B	ADVANTEST	1720302	2005.2.12
LogBicon Antenna	VULB 9160	S/B	3107	2004.6.13
Turn Table	2087	EMCO	2129	-
Antenna Mast	2070-01	EMCO	9702-203	-
ANT Mast Controller	2090	EMCO	1535	-
Turn Table Controller	2090	EMCO	1535	-

5.2 Environmental Condition

Test Place : Open site(3m)

Temperature (°C) : 8℃

Humidity (%) : 47%

5.3 Test data

Measurement Distance : 3 m

Frequency (MHz)	Reading (dBμV)	Position (V/H)	Height (m)	Correction Factor		Result Value		
				Ant Factor (dB)	Cable (dB)	Limit (dBμV/m)	Result (dBμV/m)	Margin (dBμV/m)
55.48	14.60	H	3.4	12.40	1.1	40.0	28.11	-11.89
47.56	20.10	V	2.0	12.77	1.0	40.0	33.89	-6.11
77.97	22.40	H	3.4	9.92	1.3	40.0	33.62	-6.38
80.02	26.00	H	3.0	8.77	1.3	40.0	36.09	-3.91
83.98	26.50	H	3.0	8.85	1.3	40.0	36.69	-3.31
112.04	23.40	V	1.0	11.10	1.6	43.5	36.11	-7.39
113.95	21.60	H	1.5	11.13	1.6	43.5	34.35	-9.15
125.94	24.50	V	1.0	12.11	1.7	43.5	38.32	-5.18
128.02	25.60	V	1.0	12.13	1.7	43.5	39.45	-4.05
144.00	25.00	V	1.0	13.40	1.9	43.5	40.27	-3.23
184.05	18.30	V	1.0	12.50	2.1	43.5	32.87	-10.63
200.03	18.40	H	1.3	10.38	2.2	43.5	30.96	-12.54
209.90	26.00	H	1.3	10.62	2.2	43.5	38.85	-4.65
233.88	22.00	H	1.2	11.33	2.4	46.0	35.69	-10.31
341.82	22.40	H	1.2	14.13	2.8	46.0	39.37	-6.63
437.75	14.10	H	1.0	16.15	3.3	46.0	33.51	-12.49
Remark	H : Horizontal, V : Vertical							

6. Measurement of conducted disturbance

The continuous disturbance voltage of AC Mains in the frequency from 0.15 to 30 MHz was measured in accordance to FCC Part 15 (2002) & ANSI C 63.4 (2001) The test setup was made according to FCC Part 15 (2002) & ANSI C 63.4 (2001) in a shielded. The EUT was placed on a non-conductive table at least 80 above the ground plan. A grounded vertical reference plane was positioned in a distance of 40cm from the EUT. The distance from the EUT to other metal surfaces was at least 0.8m. The EUT was only earthen by its power cord through the line impedance stabilizing network. The power cord has been bundled to a length of 1.0m.. The test receiver with Quasi Peak detector complies with CISPR 16.

6.1 Measurement equipments

Equipment Name	Type	Manufacturer	Serial No.	Next Calibration date
LISN	ESH3-Z5	Rohde & Schwarz	838979/010	2005. 2. 12
LISN	NNLA8120A	Schwarzbeck	NONE	2005. 2. 12
TEST Receiver	ESPC	Rohde & Schwarz	845296/021	2004. 6. 17
Pulse Limiter	ESH3Z2	Rohde & Schwarz	NONE	2004. 6. 17

6.2 Environmental Condition

Test Place : Shield Room

Temperature (°C) : 20℃

Humidity (%) : 34%

6.3 Test data

Frequency (MHz)	Correction Factor		Line (H/N)	Quasi-peak Value			Average Value		
	Lisn (dB)	Cable (dB)		Limit (dBμV)	Reading (dBμV)	Result (dBμV)	Limit (dBμV)	Reading (dBμV)	Result (dBμV)
0.175	0.07	0.0	N	64.74	49.92	50.01	54.74		
0.179	0.07	0.0	H	64.54	49.61	49.70	54.54		
0.211	0.07	0.0	H	63.15	48.06	48.17	53.15		
0.231	0.07	0.1	N	62.43	43.22	43.34	52.43		
0.375	0.07	0.1	N	58.39	42.29	42.50	48.39		
0.349	0.07	0.1	N	58.98	41.41	41.60	48.98		
0.591	0.08	0.2	N	56.00	50.80	51.08	46.00		
0.532	0.07	0.2	N	56.00	46.13	46.40	46.00		
0.516	0.07	0.2	H	56.00	44.49	44.76	46.00		
0.541	0.07	0.2	H	56.00	43.74	44.01	46.00	35.26	35.53
1.100	0.09	0.2	H	56.00	42.21	42.51	46.00		
0.991	0.09	0.2	N	56.00	41.96	42.25	46.00		
19.833	0.70	0.8	H	60.00	38.23	39.73	50.00		
6.002	0.24	0.4	N	60.00	36.79	37.38	50.00		
20.805	0.72	0.8	N	60.00	36.23	37.77	50.00		
15.867	0.63	0.8	H	60.00	36.07	37.50	50.00		
11.910	0.46	0.7	N	60.00	35.48	36.61	50.00		
19.520	0.69	0.8	H	60.00	35.46	36.95	50.00		
Remark	H : Hot Line, N : Neutral Line								

7. Photographs of test setup

7.1 Setup for Radiated Test : 30 ~ 1000 MHz

[Front]

[Rear]

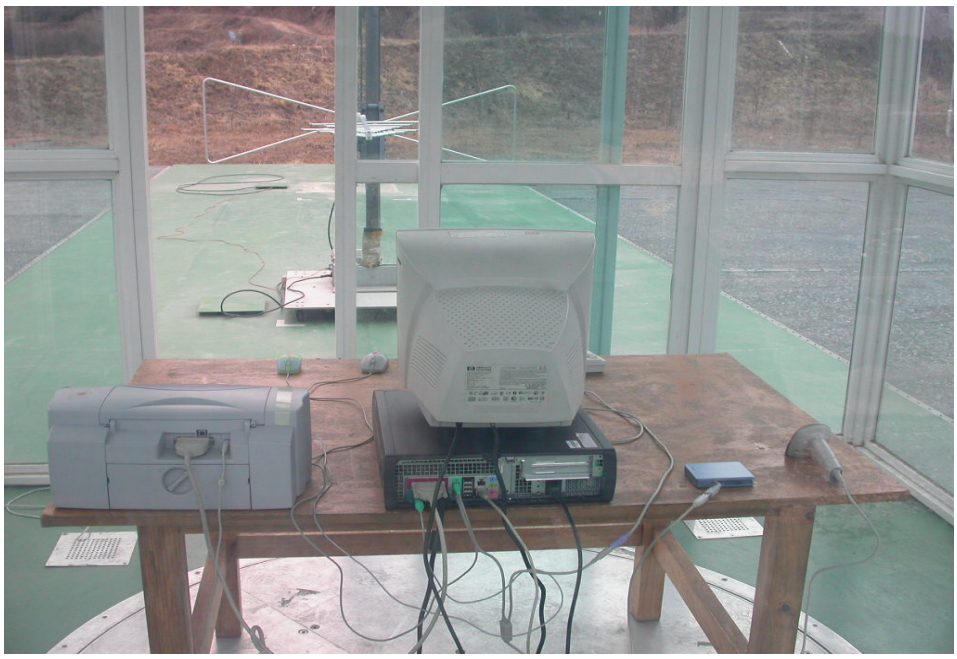

7.2 Setup for Conducted Test : 0.15 ~ 30 MHz

[Front]

[Rear]

8. Photographs of EUT

[Front]

[Rear]

Appendix 1. Spectral diagram

*HOT

24 Feb 2004 13:43

ESTECH
HOT

EUT:	TSK-2000SERISE
Manuf:	TechScan Korea co., Ltd.
Op Cond:	110V
Operator:	Senior Engineer J.M. Yang
Test Spec:	CLASS B
Comment:	

File: 0176_h.dat : techscan korea co., Ltd.

Scan Settings (1 Range)

Frequencies			Receiver Settings				
Start	Stop	Step	IF BW	Detector	M-Time	Atten	OpRge
150kHz	30MHz	0.8%	10kHz	PK+AV	20msec	Auto	60dB

Final Measurement: X QP / + AV
Meas Time: 1sec
Subranges: 25
Acc Margin: 60 dB

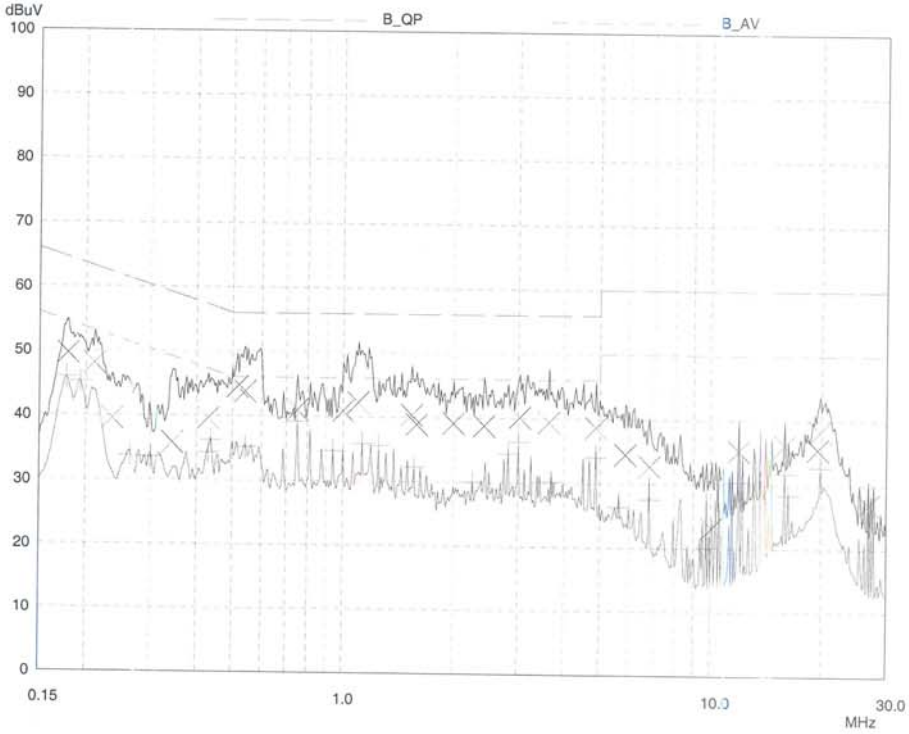

*NETRUL

24 Feb 2004 13:56

ESTECH
NEUTRAL

EUT:	TSK-2000SERISE
Manuf:	TechScan Korea co., Ltd.
Op Cond:	110V
Operator:	Senior Engineer J.M. Yang
Test Spec:	CLASS B
Comment:	

File: 0176_n.dat : techscan korea co., Ltd

Scan Settings (1 Range)

Frequencies			Receiver Settings				
Start	Stop	Step	IF BW	Detector	M-Time	Atten	OpRge
150kHz	30MHz	0.8%	10kHz	PK+AV	20msec	Auto	60dB

Final Measurement: X QP / + AV
Meas Time: 1sec
Subranges: 25
Acc Margin: 60 dB

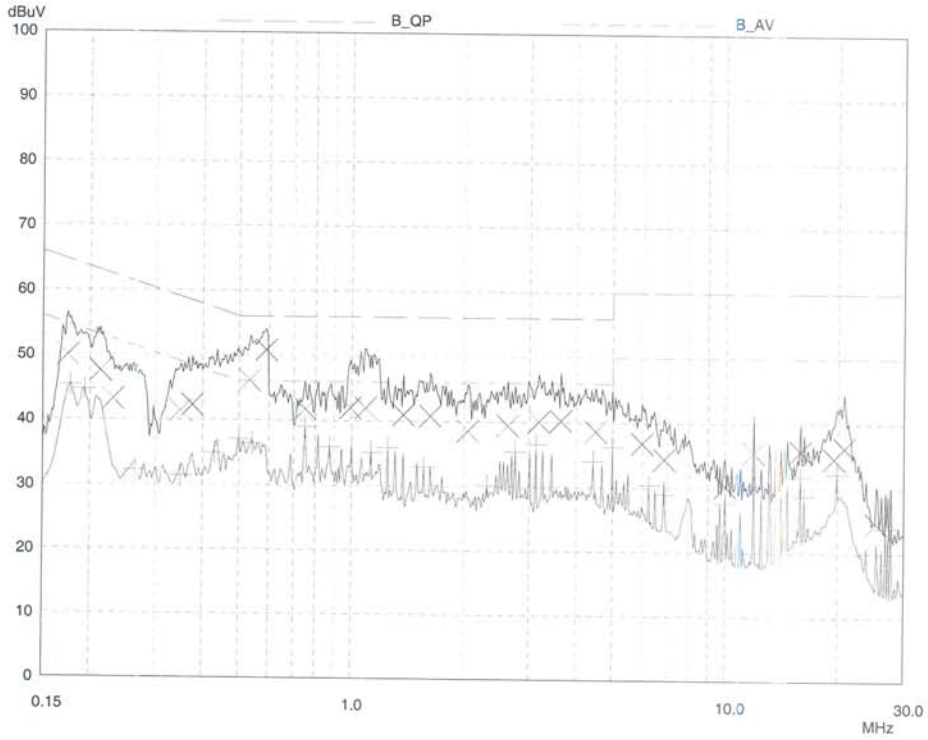

Appendix 2. Phorographs of EUT in side PCB

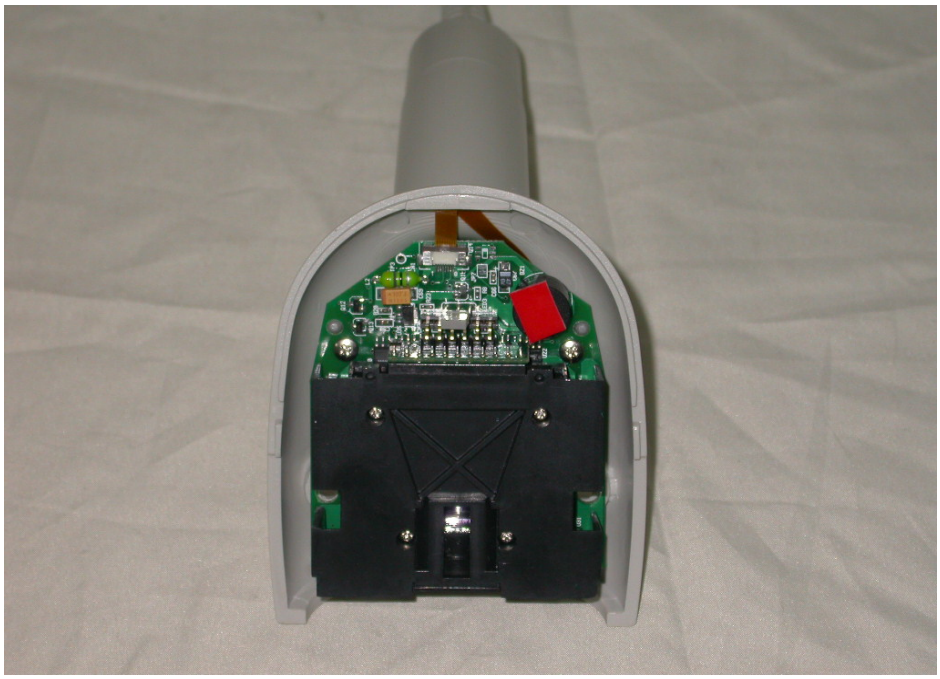

Appendix 3. Block diagram of EUT

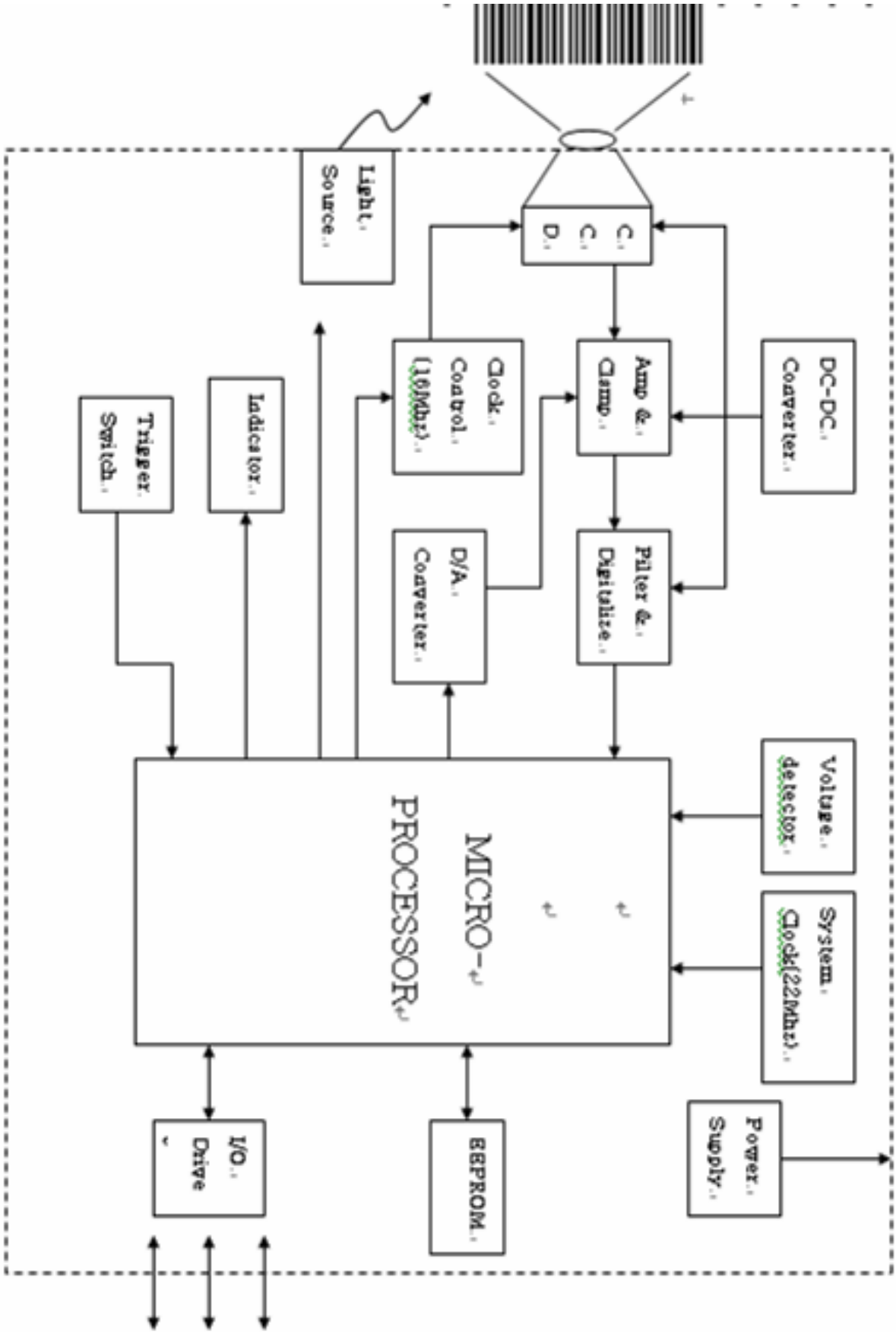

Appendix 4. Circuit Diagram