中国认可
国际互认
检测
TESTING
CNAS L4963

HAC TEST REPORT

Report No. 2017SAR251

FCC ID:	QRP-AZUMISPEEDP55
Applicant:	AZUMI S.A
Product:	Mobile Phone
Model:	Speed Pro 55
Issue Date:	2017-06-02

Prepared by: Chen Qiang **Reviewed by:** Yin Xiaoming **Approved by:** Sun Guangxu (Technical Manager)

报告专用章

Remark: This report details the results of the testing carried out on the samples specified in this report, the results contained in this test report do not relate to other samples of the same product. The manufacturer should ensure that all products in series production are in conformity with the product sample detailed in this report. The report shall not be reproduced except in full, without written approval of the Company.

Standards

Applicable Standards	**ANSI C63.19-2011:** Methods of Measurement of Compatibility between Wireless Communication Devices and Hearing Aids
	KDB 285076 D01v04r01: HAC Guidance
	KDB 285076 D02V02: T-Coil testing for CMRS IP

Conclusion

Hearing Aid Compatibility (HAC) of this equipment has been measured in all cases requested by the relevant standards above. The HAC measurement indicates that the EUT complies with the HAC limits of the ANSI C63.19-2011.

Change History

Version	Change Contents	Author	Date
V1.0	First edition	Chen Qiang	2017-05-27
V2.0	Add LTE band 2	Chen Qiang	2017-06-02

Note: The last version will be invalid automatically while the new version is issued.

CONTENTS:

STANDARDS 2

CONCLUSION 2

CHANGE HISTORY 3

1. STATEMENT OF COMPLIANCE 6

2. ADMINISTRATIVE INFORMATION 7

2.1 PROJECT INFORMATION 7
2.2 TEST LABORATORY INFORMATION 7
2.3 TEST ENVIRONMENT 7

3. CLIENT INFORMATION 8

3.1 APPLICANT INFORMATION 8
3.2 MANUFACTURER INFORMATION 8

4. EQUIPMENT UNDER TEST (EUT) AND ACCESSORY EQUIPMENT (AE) 9

4.1 INFORMATION OF EUT 9
4.2 IDENTIFICATION OF EUT 10
4.3 IDENTIFICATION OF AE 10

5. OPERATIONAL CONDITIONS DURING TEST 11

5.1 GENERAL DESCRIPTION OF TEST PROCEDURES 11
5.2 GSM TEST CONFIGURATION 11

6. HAC MEASUREMENTS SYSTEM CONFIGURATION 12

6.1 HAC MEASUREMENT SET-UP 12
6.2. DASY5 ISOTROPIC PROBE SYSTEM 13
6.2.1. CALIBRATION OF RF E-FIELD PROBES 13
6.2.2. RF field Probe modulation response *14*
6.3. OTHER TEST EQUIPMENT 15
6.3.1. Validation of dipoles *15*
6.3.2. Device Holder for Transmitters *16*
6.4. DETAILED NEAR-FIELD TEST PROCEDURE 16
6.5. DATA STORAGE AND EVALUATION 17
6.5.1. Data Storage *17*
6.5.2. Data Evaluation by SEMCAD *18*
6.6. T-COIL TEST 20
6.6.1 T-COIL COUPLING FIELD INTENSITY 21
6.6.2 FREQUENCY RESPONSE 22
6.7. MODULATION INTERFERENCE FACTOR 23
6.8. LOW-POWER EXEMPTION 25
6.9. LIMITS OF HAC RF AND T-COIL 25

7. CONDUCTED OUTPUT POWER MEASUREMENT 27

7.1. SUMMARY 27
7.2. CONDUCTED POWER RESULTS 27

8. TEST RESULTS 28

8.1. SYSTEM CHECK RESULTS 28
8.2. TEST RESULTS 29
8.2.1. Summary of HAC RF Measurement Results 29
8.2.2. Summary of HAC T-COIL Measurement Results 29
8.3. CONCLUSION 30

ANNEX A: EUT PHOTOGRAPH 31

ANNEX B: MEASUREMENT UNCERTAINTY 33

ANNEX C: MAIN TEST INSTRUMENTS 37

ANNEX D: TEST LAYOUT 38

ANNEX E: HAC SYSTEM CHECK RESULTS 40

ANNEX F: HAC RF TEST RESULTS 44

ANNEXG: HAC T-COIL TEST RESULTS 56

ANNEX H: PROBE CALIBRATION CERTIFICATE 56

ANNEX I: DIPOLE CD835V3 CALIBRATION CERTIFICATE 85

ANNEX J: DIPOLE CD1880V3 CALIBRATION CERTIFICATE 90

ANNEX K: TMFS CALIBRATION CERTIFICATE 96

1. STATEMENT OF COMPLIANCE

The Rating of Hearing Aid Compatibility (HAC) found during testing for **AZUMI S.A Mobile Phone Speed Pro 55** are as follows.

Rating of HAC summary:

Band	M-Rating	T-Rating
GSM850	M4	T3
GSM1900	M4	T3
WCDMA BAND II	M4	T4
WCDMA BAND V	M4	T4

This device is in compliance with HAC limits specified in guidelines FCC 47 CFR § 20.19 and ANSI Standard ANSI C63.19.

2. Administrative Information

2.1 Project Information

Date of start test	2017-05-17
Date of end test:	2017-05-18

2.2 Test Laboratory Information

Company:	Shanghai Tejet Communications Technology Co., Ltd Testing Center
Address:	Room 6205-6208, Building 6, No.399 Cailun Rd. Zhangjiang Hi-Tech Park, Shanghai, China
Post Code:	210203
Tel:	+86-21-61650880
Fax:	+86-21-61650881
Website:	www.tejet.cn

2.3 Test Environment

Temperature:	20℃～25℃
Relative Humidity:	20%～70%

3. Client Information

3.1 Applicant information

Company Name:	AZUMI S.A
Address:	Avenida Aquilino de la Guardia con Calle 47, PH Ocean Plaza, Piso 16 of. 16-01, Marbella, Ciudad de Panamá City, Rep. Panamá

3.2 Manufacturer Information

Company Name:	AZUMI HK LTD
Address:	FLAT/RM 18 BLK 1 14/F GOLDEN INDUSTRIAL BUILDING 16-26 KWAI TAK STREET KWAI CHUNG,HK

4. Equipment Under Test (EUT) and Accessory Equipment (AE)

4.1 Information of EUT

Device type	Portable device	
Product name	Mobile Phone	
Exposure category	Uncontrolled environment / general population	
Device operation configuration:		
Operating Mode(s):	GSM850	
	GSM1900	
	WCDMA BAND II/V	
Test modulation	(GSM)GMSK, （WCDMA）QPSK	
Antenna type:	Internal antenna	
Operating frequency range(s):	Band	Tx(MHz)
	GSM850	824.2～848.8
	GSM1900	1850.2～1909.8
	WCDMA BAND II	1852.4～1907.6
	WCDMA BAND V	826.4～846.6
	LTE BAND 2	1850～1910
	LTE BAND 4	1710～1755
	LTE BAND 7	2500～2570
Power Class	GSM850: 4,test with power level 5	
	PCS1900: 1,test with power level 0	
	WCDMA BAND II/V：3，test with maximum output power	
	LTE BAND 2/4/7： test with maximum output power	

Air-Interface	Band	RF Performance tested(C63.19)	T-coil Performance tested(C63.19)
GSM	850	yes	yes
	1900	yes	yes
WCDMA	Band II	no	yes
	Band V	no	yes
LTE	Band 2	no	no
	Band 4	no	no
	Band 7	no	no

4.2 Identification of EUT

EUT ID	SN or IMEI	Received Date
TN01	454564654656566	2017-05-17

*EUT ID: identify the test sample in the lab internally.

4.3 Identification of AE

AE ID*	Description
AE1	Battery
AE2	Travel Adaptor

AE1

Model	BT1615S
Manufacturer	Shenzhen Chuangkeyuan Electronic Technology co,.Ltd
Capacitance	2450mAh
Nominal Voltage	3.8V

AE2

Model	TPA-46D050100UU
Manufacturer	SHENZHEN TIANYIN ELECTRONICS CO.,LTD.
Length of DC line	0mm with USB connector

*AE ID: is used to identify the test sample in the lab internally.

5. Operational Conditions during Test

5.1 General description of test procedures

A communication link is set up with a system simulator by air link， and a call is established. The absolute radio frequency channel is allocated to low, middle and high respectively in the case of each band. The EUT is commanded to operate at maximum transmitting power.

Connection to the EUTis established via air interface with CMU200,and the EUT is set to maximum output power by CMU200. The antenna connected to the output of the base station simular shall be placed at least 50 cm away from the EUT. The signal transmitted by the simulator to the antenna feeding point shall be lower than the output power level of the EUT by at least 30 dB .

5.2 GSM Test Configuration

A communication link is set up with a System Simulator (SS) by air link, and a call is established. The EUT is commanded to operate at maximum transmitting power. Using CMU200 the power lever is set to “5” for GSM 850, set to “0” for GSM 1900. The test in the bands of GSM 850 and GSM 1900 are performed in the mode of speech transfer function.

While testing T-coil of GSM, CMU200 set to network/bit stream/handset low.

6. HAC Measurements system configuration

6.1 HAC Measurement set-up

The DASY5 system for performing compliance tests consists of the following items:

·A standard high precision 6-axis robot (Staubli TX=RX family) with controller, teach pendant and software. An arm extension for accommodating the data acquisition electronics (DAE).

·An isotropic _field probe optimized and calibrated for the targeted measurement.

·A data acquisition electronics (DAE) which performs the signal amplification, signal multiplexing, AD-conversion, offset measurements, mechanical surface detection, collision detection, etc. The unit is battery powered with standard or rechargeable batteries. The signal is optically transmitted to the EOC.

·The Electro-optical converter (EOC) performs the conversion from optical to electrical signals for the digital communication to the DAE. To use optical surface detection, a special version of the EOC is required. The EOC signal is transmitted to the measurement server.

·The function of the measurement server is to perform the time critical tasks such as signal filtering, control of the robot operation and fast movement interrupts.

·The Light Beam used is for probe alignment. This improves the (absolute) accuracy of the probe positioning.

·A computer running WinXP and the DASY5 software.

·Remote control and teach pendant as well as additional circuitry for robot safety such as warning lamps, etc.

·The generic twin phantom enabling the testing of left-hand and right-hand usage.

·The device holder for handheld mobile phones.

·Tissue simulating liquid mixed according to the given recipes.

· System validation dipoles allowing to validate the proper functioning of the system.

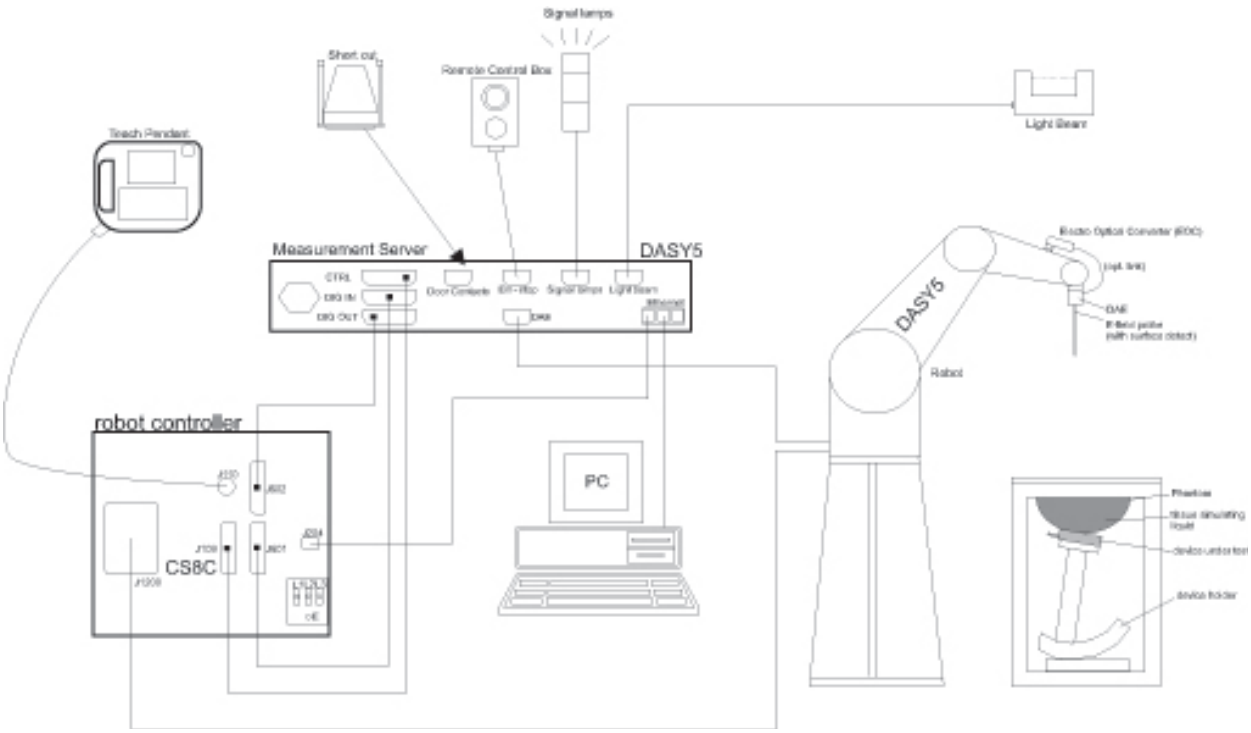

Figure 1. SAR Lab Test Measurement Set-up

6.2. DASY5 Isotropic Probe System

The HAC measurements were conducted with the dosimetric probe ER3DV6 , H3DV6 , Active Audio Magnetic Field Probe AM1DV3 (manufactured by SPEAG), designed in the classical triangular configuration and optimized for dosimetric evaluation.

6.2.1. Calibration of RF E-field probes

The purpose of the calibration for probe modulation response factor is to align the probe readings with the quantity of the RF signal most closely correlated with the intensity of interference to hearing aids.Probes used for measuring near-field emissions and calibrating immunity field levels shall be calibrated using the guidelines contained in IEEE Std 1309-2005. The field pattern shall be isotropic to a tolerance of± 20%. If probes with coaxial cables are used, the influence of cables on the field shall be accounted for in
the calibration. The H-field probe may have one, two, or three loops. In the case where these probes have less than three mutually orthogonal dipoles or loops, they shall be capable of rotation about their geometric centers to allow calibration and measurement in the three orthogonal axes. IEEE Std 1309-2005 provides for three calibration methods and several grades of calibration. The two methods that are most appropriate for ANSI C63.19 probe calibrations are Method A, using a transfer standard probe, or Method B, using a standard gain horn antenna in an anechoic chamber. The most appropriate grade of calibration is: FD, F2 (fL, fM, fH),57 A1, I0 for single-axis probes or I1 for “isotropic” probes, R0, T0, and M0. The grade designations are found in Annex A of IEEE Std 1309-2005.

The “maximum interception alignment” as defined and specified in 4.2.2.1 of IEEE Std 1309-2005 shall be used for calibration. The calibration field generation shall be via a pyramidal horn antenna in an anechoic chamber, either as a standard gain antenna, Method B (Table 2 of IEEE Std 1309-2005), or as a reference field generator using a similar probe as a transfer standard, Method A (Table 2 of IEEE Std 1309-2005). Anisotropy of “isotropic” probes shall be measured in accordance with 7.1.3 and
Equation (2) of IEEE Std 1309-2005.
The best-case expanded uncertainty, U, for probe calibration is U ≈ ± 1.1 dB for Method A and U ≈ ± 1.0 dB for Method B. Out of the allowable expanded uncertainty of ± 2 dB (see 4.1.2), these calibration uncertainties leave approximately ± 0.84 dB to ± 0.86 dB in terms of combined standard uncertainty, uC, for other contributors. That is: U = ± 2 dB, thus
$Uc = \pm 2 \div 2 = \pm 1$ dB; $Us^2 = Uc^2 - Ucal^2$;$Ucal = Ucal \div 2 = \pm 1.1 \div 2 = \pm 0.55$ dB (the value, Ucal = ± 1.1 dB, is from Method A); and, $Us = \sqrt{(12 - 0.552)} = \pm 0.84$ dB.

Figure 2.ER3DV6 E-field Probe

6.2.2. RF field Probe modulation response

In addition, for probes with a response to variations in the RF field of < 20 kHz, a calibration shall be made of the modulation response of the probe and its instrumentation chain. This calibration shall be performed with the field probe attached to the instrumentation that is to be used with it during the measurement. The response of the probe system to a CW field at the frequency(s) of interest is compared to its response to a
modulated signal with equal amplitude. The field level of the test signals shall be more than 10 dB above the ambient level and the noise floor of the instrumentation being used. The ratio of the CW reading to that taken with a modulated field shall be applied to the readings taken of modulated fields of the specified type.
This may be done using the following procedure:
1) Fix the probe in a set location relative to a field generating device, such as a reference dipole antenna or WB TEM,
2) Illuminate the probe with a CW signal at the intended measurement frequency.
3) Record the reading of the probe measurement system of the CW signal.
4) Record the power level of the CW signal being used to drive the field generating device.

5) Substitute a signal using the same modulation as that used by the intended WD for the CW signal.
6) Set the amplitude during transmission of the modulated signal to equal the amplitude of the CW signal.
7) Record the modulated signal reading from the probe measurement system.
8) The ratio, in linear units, of the CW to modulated signal reading is the modulation factor.

6.3. Other Test Equipment

6.3.1. Validation of dipoles

Equipment

1) Broadband dipoles 800 MHz to 950 MHz or 1.6 GHz to 2.5 GHz
2) Signal generator
3) RF amplifier
4) Calibrated E-field probes
5) Appropriate test location, i.e., anechoic room or at least a test area large enough so that reflections off of nearby objects do not disturb the test results

Validation procedure

1) Connect equipment as shown in Figure 4.
   Position the E-field probe at a 15 mm distance from the top surface of the dipole, which is alsofixed in an appropriate fixture (Figure C.1). A gauge block, like that shown in Figure A.3, may be used to set the 15 mm distance accurately.
2) Make sure that the desired measuring channel of the probe is aligned for maximum reception of the E-field generated by the dipole. This may be accomplished by rotating the probe until the maximum value is located. The E-field probe shall have been calibrated over the frequency range to be measured using standard calibration techniques.
3) Adjust the power level of the signal generator at the initial starting frequency such that the desired E-field strength at the 15 mm distance from the tip of the dipole is achieved. Setting the field strength to be in the range of category M2 is advised; see Table 5.1 for representative values.
4) Step the frequency in increments of ≤1%, adjusting the power fed into the dipole such that the desired E-field strength is maintained.
5) Record the frequency and signal generator setting at each frequency for use during the actual immunity test. A sample calibration chart in is provided in Table C.1, as an example. If the dipole has a broadband matching section, check that the VSWR is within the specified VSWR over the test band. Tune the dipole or adjust the matching section, if necessary, to achieve better matching..

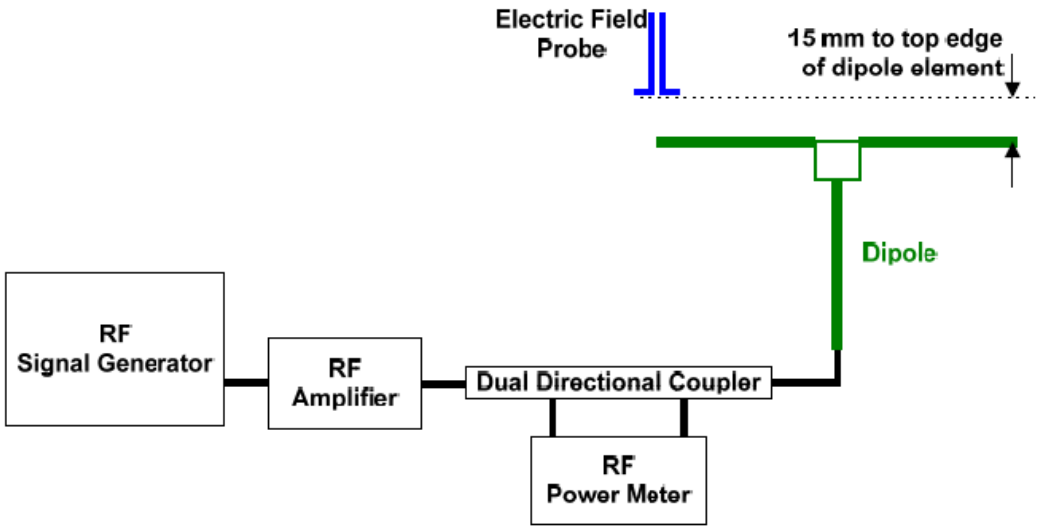

Figure 4. Dipole validation procedure

6.3.2. Device Holder for Transmitters

The DASY device holder is designed to cope with the die rent positions given in the standard. It has two scales for device rotation (with respect to the body axis) and device inclination (with respect to the line between the ear reference points). Thus the device needs no repositioning when changing the angles. The amount of dielectric material has been reduced in the closest vicinity of the device, since measurements have suggested that the inference of the clamp on the test results could thus be lowered.

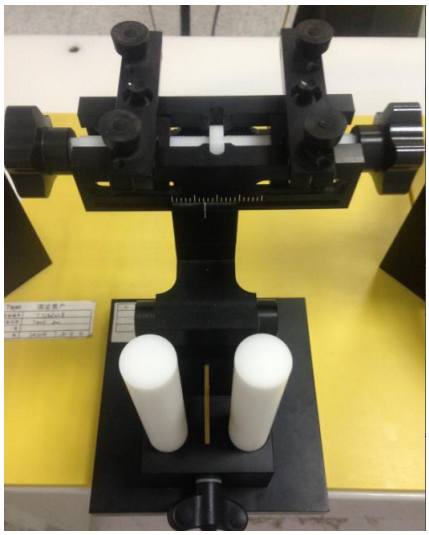

Figure 5.Device Holder

6.4. Detailed Near-field Test Procedure

Pre-test procedure

The following steps shall be performed before the WD near-field emissions test is performed (see

Figure 6). However, these steps need not be performed before every test. They shall be performed periodically, consistent with good laboratory practice and as required, for example, before testing types of WDs not assessed previously at a laboratory.

1) Check for probe positioning system repeatability and accuracy.

2) Confirm interference of reflective objects is less than –20 dB of the intended signal. This may be done by performing the same measurements on the same WD using multiple WD positions and orientations. The readings shall not differ, due to reflections, by more than ± 0.8 dB.

Pre-Test Instructions

Confirm calibration of field probes is current

↓

Calibration of field probes for modulation response

↓

Confirm calibration of other (test equipment is current Setup test bed)

↓

Check positioning system repeatability and accuracy

↓

Confirm reflections are less than –20 dB

↓

Proceed to test instruction

Figure 6—WD near-field emissions pre-test flowchart

6.5. Data Storage and Evaluation

6.5.1. Data Storage

The DASY5 software stores the acquired data from the data acquisition electronics as raw data (in microvolt readings from the probe sensors), together with all necessary software parameters for the data evaluation (probe calibration data, liquid parameters and device frequency and modulation data) in measurement files with the extension ".DA4". The software evaluates the desired unit and format for output each time the data is visualized or exported. This allows verification of the complete software setup even after the measurement and allows correction of

incorrect parameter settings. For example, if a measurement has been performed with a wrong crest factor parameter in the device setup, the parameter can be corrected afterwards and the data can be re-evaluated. The measured data can be visualized or exported in different units or formats, depending on the selected probe type ([V/m], [A/m], [°C], [mW/g], [mW/cm²], [dBrel], etc.). Some of these units are not available in certain situations or show meaningless results, e.g., a SAR output in a lossless media will always be zero. Raw data can also be exported to perform the evaluation with other software packages.

6.5.2. Data Evaluation by SEMCAD

The SEMCAD software automatically executes the following procedures to calculate the field units from the microvolt readings at the probe connector. The parameters used in the evaluation are stored in the configuration modules of the software:

Probe parameters:	- Sensitivity	Normi, a_{i0}, a_{i1}, a_{i2}
	- Conversion factor	$ConvF_i$
	- Diode compression point	Dcp_i
Device parameters:	- Frequency f	
	- Crest factor cf	
Media parameters:	- Conductivit	
	- Density	

These parameters must be set correctly in the software. They can be found in the component documents or they can be imported into the software from the configuration files issued for the DASY5 components. In the direct measuring mode of the multimeter option, the parameters of the actual system setup are used. In the scan visualization and export modes, the parameters stored in the corresponding document files are used.

The first step of the evaluation is a linearization of the filtered input signal to account for the compression characteristics of the detector diode. The compensation depends on the input signal, the diode type and the DC-transmission factor from the diode to the evaluation electronics.

If the exciting field is pulsed, the crest factor of the signal must be known to correctly compensate for peak power. The formula for each channel can be given as:

$$V_i = U_i + U_i^2 \cdot cf / dcp_i$$

With V_i = compensated signal of channel i (i = x, y, z)

U_i = input signal of channel i (i = x, y, z)

cf = crest factor of exciting field (DASY parameter)

dcp_i = diode compression point (DASY parameter)

From the compensated input signals the primary field data for each channel can be evaluated:

E-field probes: $E_i = (V_i / Norm_i \cdot ConvF)^{1/2}$

H-field probes: $H_i = (V_i)^{1/2} \cdot (a_{i0} + a_{i1} f + a_{i2} f^2) / f$

With V_i = compensated signal of channel i (i = x, y, z)

$Norm_i$ = sensor sensitivity of channel i (i = x, y, z)

[mV/(V/m)^2] for E-field Probes

$ConvF$ = sensitivity enhancement in solution

a_{ij} = sensor sensitivity factors for H-field probes

f = carrier frequency [GHz]

E_i = electric field strength of channel i in V/m

H_i = magnetic field strength of channel i in A/m

The RSS value of the field components gives the total field strength (Hermitian magnitude):

$E_{tot} = (E_x^2 + E_Y^2 + E_z^2)^{1/2}$

The primary field data are used to calculate the derived field units.

$SAR = (E_{tot}^2 \cdot \quad) \square \; / (\quad \cdot 1000)$

with SAR = local specific absorption rate in mW/g

E_{tot} = total field strength in V/m

□ = conductivity in [mho/m] or [Siemens/m]

□ = equivalent tissue density in g/cm3

Note that the density is normally set to 1 (or 1.06), to account for actual brain density rather than the
density of the simulation liquid. The power flow density is calculated assuming the excitation field to
be a free space field.

$P_{pwe} = E_{tot}^2 / 3770$ or $P_{pwe} = H_{tot}^2 \cdot 37.7$

with P_{pwe} = equivalent power density of a plane wave in mW/cm^2

E_{tot} = total electric field strength in V/m

***H**tot* = total magnetic field strength in A/m

6.6. T-coil Test

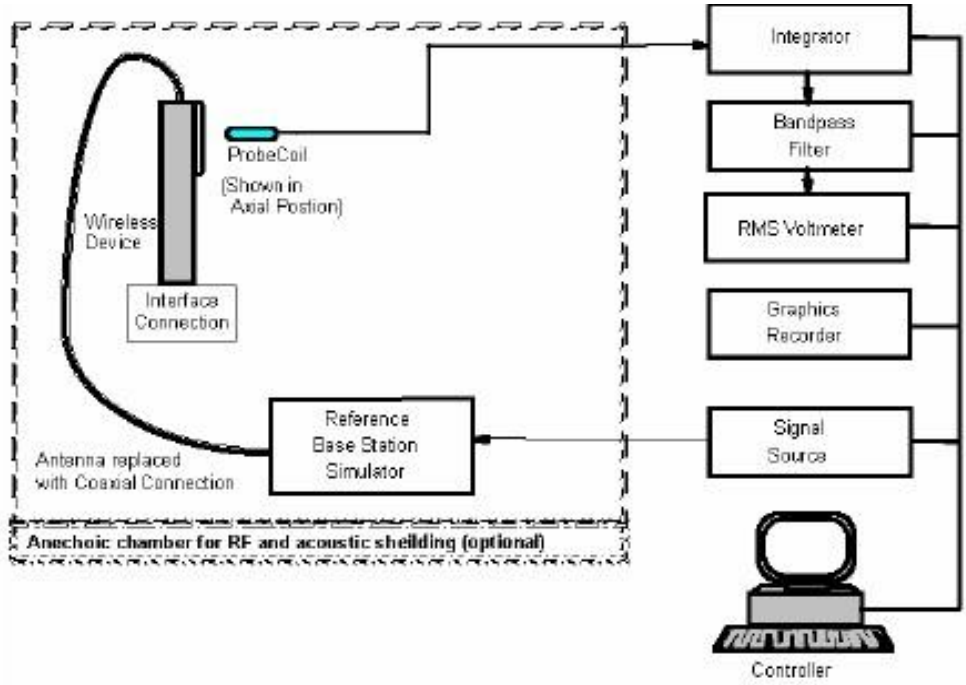

Figure 8. T-coil measurement test Set-up

A base station simulator, as shown in test setup Figure 6.1, allows the WD to be in its conversation mode. It is required that the base station simulator provide the complementary audio signal processing to the WD. Through the base station simulator, command the WD to transmit at maximum RF power.

NOTE—The WD is set to transmit at maximum RF power to ensure that associated baseband effects such as battery surge currents are accounted for. However, the WD antenna is replaced by a coax so as to mask the effects of the RF transmission signal from the measurement. Set the base station simulator to provide a low-level RF signal, approximately –50 dBm, using a frequency near the center of the frequency band. Inject a P.50 artificial speech signal, or similar speech signal in accordance with 9), for the digital mode.

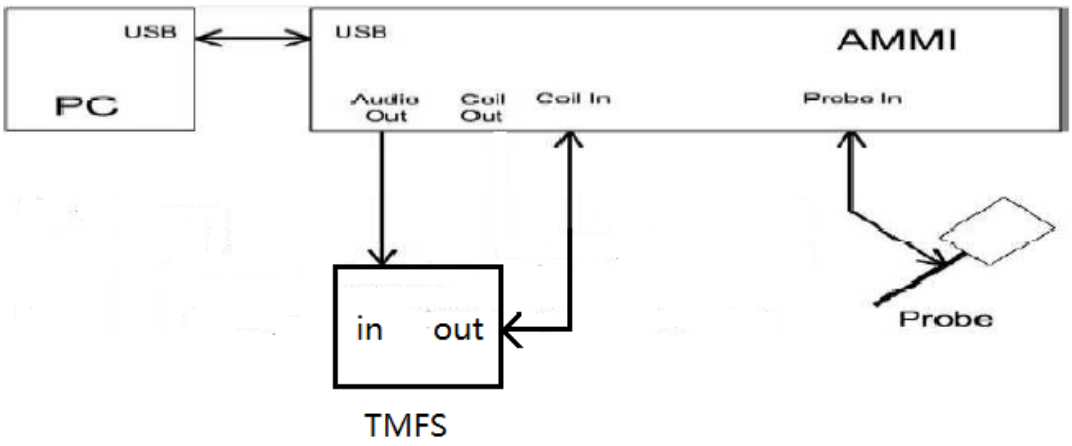

Figure 9. T-coil validation Set-up

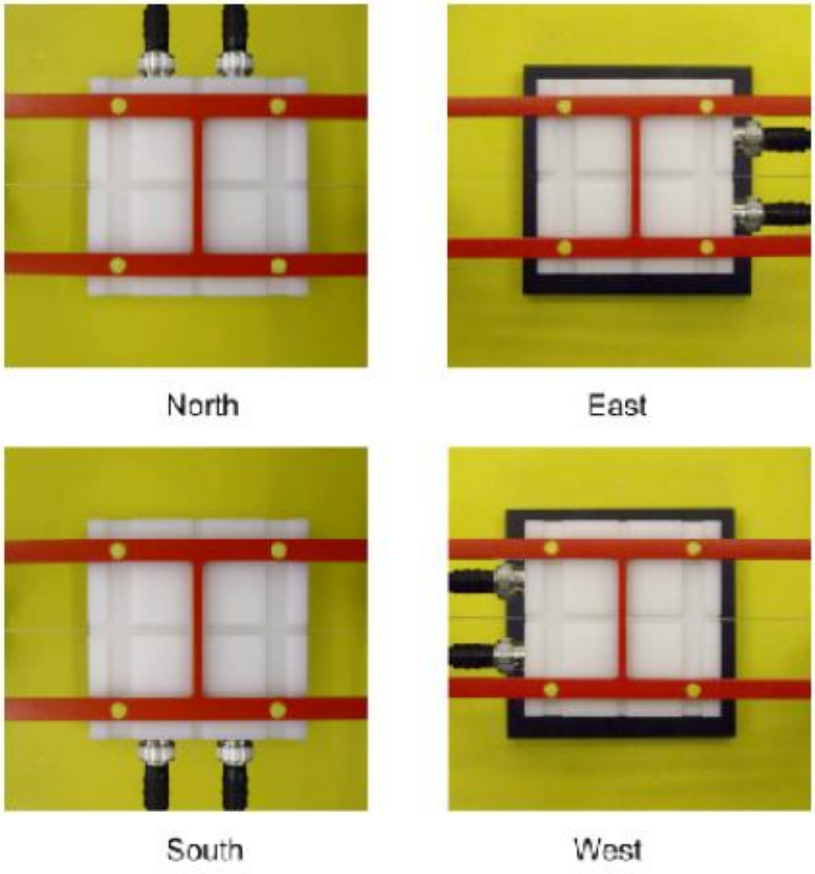

Figure 10. TMFS for T-coil validation Set-up 4 positions

6.6.1 T-Coil coupling field intensity

When measured as specified in this standard, the T-Coil signal shall be ≥ –18 dB (A/m) at 1 kHz, in a 1/3 octave band filter for all orientations.

6.6.2 Frequency response

The frequency response of the perpendicular component of the magnetic field, measured in 1/3 octave bands, shall follow the response curve specified in this subclause, over the frequency range 300 Hz to 3000 Hz.

Figure 11 and Figure 12 provide the boundaries as a function of frequency. These response curves are fortrue field-strength measurements of the T-Coil signal. Thus, the 6 dB/octave probe response has been corrected from the raw readings.

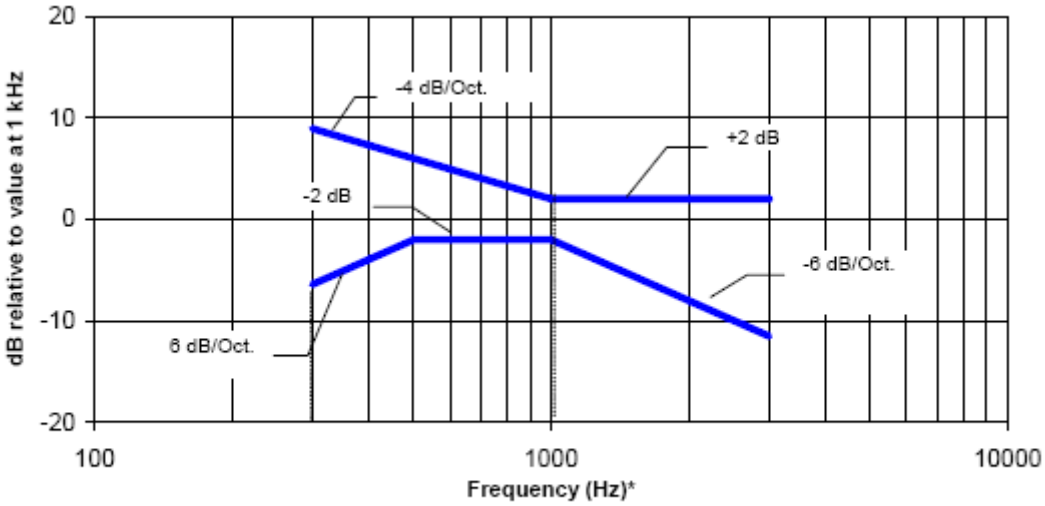

NOTE—Frequency response is between 300 Hz and 3000 Hz.

Figure 11 Magnetic field frequency response for EUTs with a field ≤ –15 dB (A/m) at 1 kHz

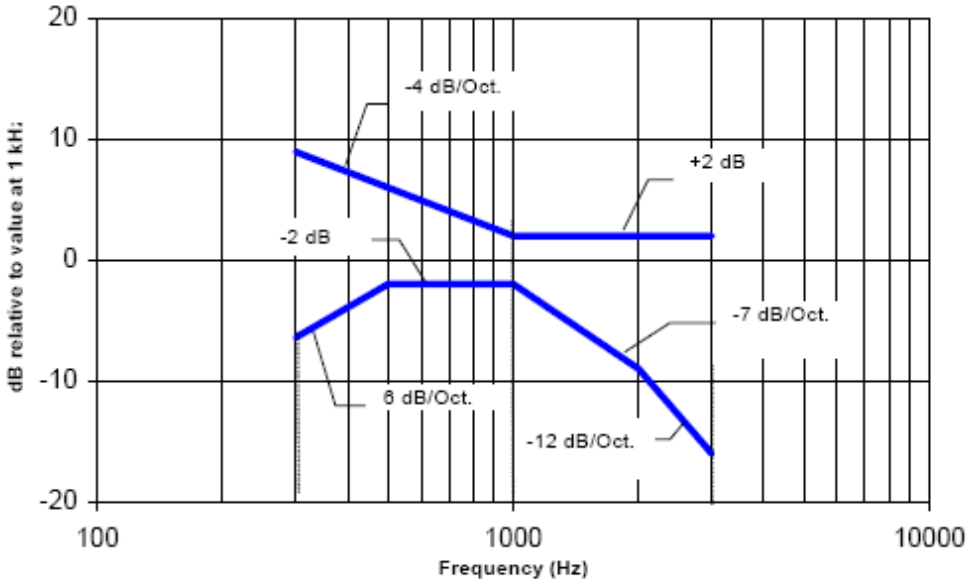

NOTE—Frequency response is between 300 Hz and 3000 Hz.

Figure 12 Magnetic field frequency response for EUTs with a field that exceeds –15 dB(A/m) at 1 kHz

6.7. Modulation interference factor

The HAC Standard ANSI C63.19-2011 defines a new Scaling using the Modulation Interference Fcator(MIF)

For any specific fixed and repeatable modulated signal, a modulation interference factor (MIF, expressed in dB) may be developed that relates its interference potential to its steady-state rms signal level or average power level. This factor is a function only of the audio-frequency amplitude modulation characteristics of the signal and is the same for field-strength and conducted power measurements. It is important to emphasize that the MIF is valid only for a specific repeatable audio-frequency amplitude modulation characteristic. Any change in modulation characteristic requires determination and application of a new MIF.

The MIF may be determined using a radiated RF field, a conducted RF signal, or in a preliminary stage, a mathematical analysis of a modeled RF signal:

a) Verify the slope accuracy and dynamic range capability over the desired operating frequency band of a fast probe or sensor, square-law detector, as specified in D.3, and weighting system as specified in D.4 and D.5. For the probe and instrumentation included in the measurement of MIF, additional calibration and application of calibration factors are not required.

b) Using RF illumination or conducted coupling, apply the specific modulated signal in question to the measurement system at a level within its confirmed operating dynamic range.

c) Measure the steady-state rms level at the output of the fast probe or sensor.

d) Measure the steady-state average level at the weighting output.

e) Without changing the square-law detector or weighting system, and using RF illumination or conducted coupling, substitute for the specific modulated signal a 1 kHz, 80% amplitudemodulated carrier at the same frequency and adjust its strength until the level at the weighting output equals the step d) measurement.

f) Without changing the carrier level from step e), remove the 1 kHz modulation and again measure the steady-state rms level indicated at the output of the fast probe or sensor.

g) The MIF for the specific modulation characteristic is provided by the ratio of the step f) measurement to the step c) measurement, expressed in dB (20 × log(step f))/step c)).

MIF values applied in this test report were provided by the HAC equipment provider,SPEAG,and the values are listed below

UID	Communication System Name	MIF(dB)
10021	GSM-FDD(TDMA,GMSK)	3.63
10011	UMTS-FDD(WCDMA)	-27.23
10039	CDMA2000 (1xRTT, RC1)	-19.77
10081	CDMA2000 (1xRTT, RC3)	-19.71
10295	CDMA2000 (1xRTT, RC1 SO3, 1/8th Rate 25 fr.)	3.26
10100	LTE-FDD(SC-FDMA,100%RB,20MHz,QPSK)	-23.48
10101	LTE-FDD(SC-FDMA,100%RB,20MHz,16-QAM)	-17.86
10108	LTE-FDD(SC-FDMA,100%RB,10MHz,QPSK)	-21.57
10109	LTE-FDD(SC-FDMA,100%RB,10MHz,16-QAM)	-16.87
10110	LTE-FDD(SC-FDMA,100%RB,5MHz,QPSK)	-23.39
10111	LTE-FDD(SC-FDMA,100%RB,5MHz,16-QAM)	-16.35
10139	LTE-FDD(SC-FDMA,100%RB,15MHz,QPSK)	-18.25
10140	LTE-FDD(SC-FDMA,100%RB,15MHz,16-QAM)	-19.37
10142	LTE-FDD(SC-FDMA,100%RB,3MHz,QPSK)	-22.36
10143	LTE-FDD(SC-FDMA,100%RB,3MHz,16-QAM)	-14.75
10145	LTE-FDD(SC-FDMA,100%RB,1.4MHz,QPSK)	-17.39
10146	LTE-FDD(SC-FDMA,100%RB,1.4MHz,16-QAM)	-13.6
10148	LTE-FDD(SC-FDMA,50%RB,20MHz,QPSK)	-18.28
10149	LTE-FDD(SC-FDMA,50%RB,20MHz,16-QAM)	-16.87
10154	LTE-FDD(SC-FDMA,50%RB,10MHz,QPSK)	-23.42
10155	LTE-FDD(SC-FDMA,50%RB,10MHz,16-QAM	-16.36
10156	LTE-FDD(SC-FDMA,50%RB,5MHz,QPSK)	-21.71
10157	LTE-FDD(SC-FDMA,50%RB,5MHz,16-QAM)	-15.78
10160	LTE-FDD(SC-FDMA,50%RB,15MHz,QPSK)	-17.95
10161	LTE-FDD(SC-FDMA,50%RB,15MHz,16-QAM)	-17.54
10163	LTE-FDD(SC-FDMA,50%RB,3MHz,QPSK)	-19.99
10164	LTE-FDD(SC-FDMA,50%RB,3MHz,16-QAM)	-14.41
10166	LTE-FDD(SC-FDMA,50%RB,1.4MHz,QPSK)	-18.1
10167	LTE-FDD(SC-FDMA,50%RB,1.4MHz,16-QAM)	-12.15
10169	LTE-FDD(SC-FDMA,1RB,20MHz,QPSK)	-15.63
10170	LTE-FDD(SC-FDMA,1RB,20MHz,16-QAM)	-9.76
10175	LTE-FDD(SC-FDMA,1RB,10MHz,QPSK)	-15.63
10176	LTE-FDD(SC-FDMA,1RB,10MHz,16-QAM)	-9.76
10177	LTE-FDD(SC-FDMA,1RB,5MHz,QPSK)	-15.63
10178	LTE-FDD(SC-FDMA,1RB,5MHz,16-QAM	-9.76
10181	LTE-FDD(SC-FDMA,1RB,15MHz,QPSK)	-15.63
10182	LTE-FDD(SC-FDMA,1RB,15MHz,16-QAM)	-9.76
10184	LTE-FDD(SC-FDMA,1RB,3MHz,QPSK)	-15.62
10185	LTE-FDD(SC-FDMA,1RB,3MHz,16-QAM)	-9.76
10187	LTE-FDD(SC-FDMA,1RB,1.4MHz,QPSK)	-15.62
10188	LTE-FDD(SC-FDMA,1RB,1.4MHz,16-QAM)	-9.76

The MIF measurement uncertainty is estimated as follows, declared by HAC equipment provider SPEAG,for modulation frequencies from slotted waveforms with fundamental frequency and at least 2 harmonics within 10 kHz:

i) 0.2 dB for MIF: -7 to +5 dB

ii) 0.5 dB for MIF: -13 to +11 dB

iii) 1 dB for MIF: >-20 dB

6.8. Low-power Exemption

Max Tune-up Limit

Operation Mode		Average Power(dBm)
GSM	GSM850	33.0
	GSM1900	31.0
WCDMA	Band II	24.0
	Band V	24.0
LTE	Band 2	23.0
	Band 4	23.0
	Band 7	22.0

Low-power Exemption

Band	Maximum Average Power(dBm)	Worst case MIF(dB)	Power+MIF (dB)	C63.19 test required
GSM850	33.0	3.63	36.63	Yes
GSM1900	31.0	3.63	34.63	Yes
WCDMA Band II	24.0	-27.23	-3.23	No
WCDMA Band V	24.0	-27.23	-3.23	No
LTE BAND 2	23.0	-9.76	13.24	No
LTE BAND 4	23.0	-9.76	13.24	No
LTE BAND 7	22.0	-9.76	12.24	No

According to ANSI C63.19 2011 4.4

RF air interface technologies that have low power have been found to produce sufficiently low RF interference potential, so that it is possible to exempt them from the product testing specified in Clause 5. as described in 5.4.4. An RF air interfacetechnology of a device is exempt from testing when its average antenna input power plus its MIF is≤17 dBm for any of its operating modes.

6.9. Limits of HAC RF and T-coil

RF E-field category

Emission categories	E-Field Emissions (V/m) < 960MHz
Category M1	50 to 55 dB(V/m)
Category M2	45 to 50 dB(V/m)
Category M3	40 to 45 dB(V/m)
Category M4	<40 dB(V/m)

Emission categories	E-Field Emissions (V/m) > 960MHz
Category M1	40 to 45 dB(V/m)
Category M2	35 to 40 dB(V/m)
Category M3	30 to 35 dB(V/m)
Category M4	<30 dB(V/m)

T-coil category

Category	**Telephone parameters WD signal quality [(signal+noise)-to-noise ratio in decibels]**
Category T1	0 dB to 10 dB
Category T2	10 dB to 20 dB
Category T3	20 dB to 30 dB
Category T4	> 30 dB

7. Conducted Output Power Measurement

7.1. Summary

The DUT is tested using an CMU200 communications tester as controller unit to set test channels and maximum output power to the DUT, as well as for measuring the conducted power. Conducted output power was measured using an integrated RF connector and attached RF cable.This result contains conducted output power for the EUT.

7.2. Conducted Power Results

GSM850	Conducted power(dBm)		
	Channel 128	Channel 189	Channel 251
Test Result	32.33	32.35	32.34

GSM1900	Conducted power(dBm)		
	Channel 512	Channel 661	Channel 810
Test Result	30.24	30.38	30.42

WCDMA Band II	Conducted power(dBm)		
	Channel 9262	Channel 9400	Channel 9538
12.2kbps RMC	23.55	23.77	23.26

WCDMA Band V	Conducted power(dBm)		
	Channel 4132	Channel 4183	Channel 4233
12.2kbps RMC	23.42	23.40	23.64

8. Test Results

8.1. System Check Results

System Check for RF E-field

Frequency	Description	Measurement Result	
		E-Field dB(V/m)	Div(%)
835MHz	Recommended result	108.0	\
	±10% window	97.2-118.8	
	Measurement value 2017-05-17	107.9	-0.09
1880MHz	Recommended result	90.2	\
	±10% window	81.18-98.22	
	Measurement value 2017-05-17	90.97	0.85

Note: 1. the graph results see ANNEX E.

2 .Recommended Values used derive from the calibration certificate and 100 mW is used as feeding power to the calibrated dipole.

8.2. Test Results

8.2.1. Summary of HAC RF Measurement Results

Test Case		Measurement Result	
Band	Channel	Max E-Field(V/m)	Category
GSM850	Low/128	33.60	M4
	Mid/189	33.65	M4
	High/251	33.76	M4

Test Case		Measurement Result	
Band	Channel	Max E-Field(V/m)	Category
GSM1900	Low/512	25.86	M4
	Mid/661	26.54	M4
	High/810	25.34	M4

8.2.2. Summary of HAC T-COIL Measurement Results

BAND	CH	Probe Position	Measurement position (x mm,y mm)	ABM1 (dB(A/m))	SNR (dB)	Frequency Response	T Category
GSM850	189	Radial (transversal)	0,-8.3	-7.34	27.60	pass	T3
		Axial	0,0	1.36	21.44		T3

BAND	CH	Probe Position	Measurement position (x mm,y mm)	ABM1 (dB(A/m))	SNR (dB)	Frequency Response	T Category
GSM1900	661	Radial (transversal)	-4.2,-8.3	-11.17	28.47	pass	T3
		Axial	0,0	1.0	24.97		T3

BAND	CH	Probe Position	Measurement position (x mm,y mm)	ABM1 (dB(A/m))	SNR (dB)	Frequency Response	T Category
WCDMA Band II	9400	Radial (transversal)	0,12.5	-9.84	32.51	pass	T4
		Axial	-4.2,0	-3.33	34.07		T4

BAND	CH	Probe Position	Measurement position (x mm,y mm)	ABM1 (dB(A/m))	SNR (dB)	Frequency Response	T Category
WCDMA Band V	4183	Radial (transversal)	0,12.5	-9.55	32.29	pass	T4
		Axial	-4.2,0	-3.36	34.21		T4

8.3. Conclusion

Band	M-Rating	PASS/FAIL	T-Rating	PASS/FAIL
GSM850	M4	PASS	T3	PASS
GSM1900	M4	PASS	T3	PASS
WCDMA BAND II	M4	PASS	T4	PASS
WCDMA BAND V	M4	PASS	T4	PASS

General Judgment： PASS

ANNEX A: EUT Photograph

EUT

BATTERY

Travel Adaptor

ANNEX B: Measurement Uncertainty

HAC Uncertainty Budget According to ANSI C63.19-2011

Error Description	Uncertainty Value	Prob Dist	Div.	(ci) E	Std. Unc. E
Measurement System					
Probe Calibration	5.1%	N	1	1	5.1%
Axial Isotropy	4.7%	R	$\sqrt{3}$	1	2.7%
Sensor Displacement	16.5%	R	$\sqrt{3}$	1	9.5%
Boundary Effects	2.4%	R	$\sqrt{3}$	1	1.4%
Phantom Boundary Effect	7.2%	R	$\sqrt{3}$	1	4.1%
Linearity	4.7%	R	$\sqrt{3}$	1	2.7%
Scaling to Peak Envelope Power	2.0%	R	$\sqrt{3}$	1	1.2%
System Detection Limit	1.0%	R	$\sqrt{3}$	1	0.6%
Readout Electronics	0.3%	N	1	1	0.3%
Response Time	0.8%	R	$\sqrt{3}$	1	0.5%
Integration Time	2.6%	R	$\sqrt{3}$	1	1.5%
RF Ambient Conditions	3.0%	R	$\sqrt{3}$	1	1.7%
RF Reflections	12.0%	R	$\sqrt{3}$	1	6.9%
Probe Positioner	1.2%	R	$\sqrt{3}$	1	0.7%
Probe Positioning	4.7%	R	$\sqrt{3}$	1	2.7%
Extrap. and Interpolation	1.0%	R	$\sqrt{3}$	1	0.6%
Test Sample Related					
Device Positioning Vertical	4.7%	R	$\sqrt{3}$	1	2.7%
Device Positioning Lateral	1.0%	R	$\sqrt{3}$	1	0.6%

Device Holder and Phantom	2.4%	R	$\sqrt{3}$	1	1.4%
Power Drift	5.0%	R	$\sqrt{3}$	1	2.9%
Phantom and Setup Related					
Phantom Thickness	2.4%	R	$\sqrt{3}$	1	1.4%
Combined Std. Uncertainty					14.8%
Expanded Std. Uncertainty(95% k=2)					29.6%

Uncertainty Budget for HAC T-Coil measurements

Uncertainty of Audio Band Magnetic Measurements According to ANSI C63.19-2011							
Error Description	Uncertainty Value	Prob Dist	Div.	(ci) ABM1	(ci) ABM2	Std. Unc. ABM1	Std. Unc. ABM2
Probe Sensitivity							
Reference Level	3.0%	N	1	1	1	3.0%	3.0%
AMCC Geometry	0.4%	R	$\sqrt{3}$	1	1	0.2%	0.2%
AMCC Current	1.0%	R	$\sqrt{3}$	1	1	0.6%	0.6%
Probe Positioning during Calibration.	0.1%	R	$\sqrt{3}$	1	1	0.1%	0.1%
Noise Contribution	0.7%	R	$\sqrt{3}$	0.0143	1	0.0%	0.4%
Frequency Slope	5.9%	R	$\sqrt{3}$	0.1	1.0	0.3%	3.5%
Probe System							
Repeatability / Drift	1.0%	R	$\sqrt{3}$	1	1	0.6%	0.6%
Linearity / Dynamic Range	0.6%	R	$\sqrt{3}$	1	1	0.4%	0.4%
Acoustic Noise	1.0%	R	$\sqrt{3}$	0.1	1	0.1%	0.6%
Probe Angle	2.3%	R	$\sqrt{3}$	1	1	1.4%	1.4%
Spectral Processing	0.9%	R	$\sqrt{3}$	1	1	0.5%	0.5%
Integration Time	0.6%	N	1	1	5	0.6%	3.0%
Field Disturbation	0.2%	R	$\sqrt{3}$	1	1	0.1%	0.1%
Test Signal							
Ref. Signal Spectral Response	0.6%	R	$\sqrt{3}$	0	1	0.0%	0.4%
Positioning							
Probe Positioning	1.9%	R	$\sqrt{3}$	1	1	1.1%	1.1%
Phantom Thickness	0.9%	R	$\sqrt{3}$	1	1	0.5%	0.5%

DUT Positioning	1.9%	R	$\sqrt{3}$	1	1	1.1%	1.1%
External Contributions							
RF Interference	0.0%	R	$\sqrt{3}$	1	0.3	0.0%	0.0%
Test Signal Variation	2.0%	R	$\sqrt{3}$	1	1	1.2%	1.2%
Combined Uncertainty							
Combined Std. Uncertainty (ABM Field)						**4.1%**	**6.1%**
Expanded Std. Uncertainty(95% k=2)						**8.2%**	**12.2%**

ANNEX C: Main Test Instruments

No.	Name	Type	Calibration Date	Valid Period
01	Power meter	Agilent E4419B	May 18th，2016	One year
02	Power sensor A	Agilent 8482A	May 18th，2016	One year
03	Power sensor B	Agilent 8485D	May 18th，2016	One year
04	Signal Generator	Agilent N5182A	Oct28th，2016	One year
05	Amplifier	ZHL-42W	NA	
06	BTS	CMU200	Oct28th，2016	One year
07	DAE	DAE4	Sep 28th，2016	One year
08	E-field Probe	ER3DV6	Aug 24th，2015	Two year
09	T-coil Test Probe	AM1DV3	Aug 25th，2015	Two year
10	Dipole835MHz	CD835V3	Aug 20th，2015	Two year
11	Dipole1880MHz	CD1880V3	Aug 20th，2015	Two year
12	T-coil validation kit	TMFS	NA	

ANNEX D: Test Layout

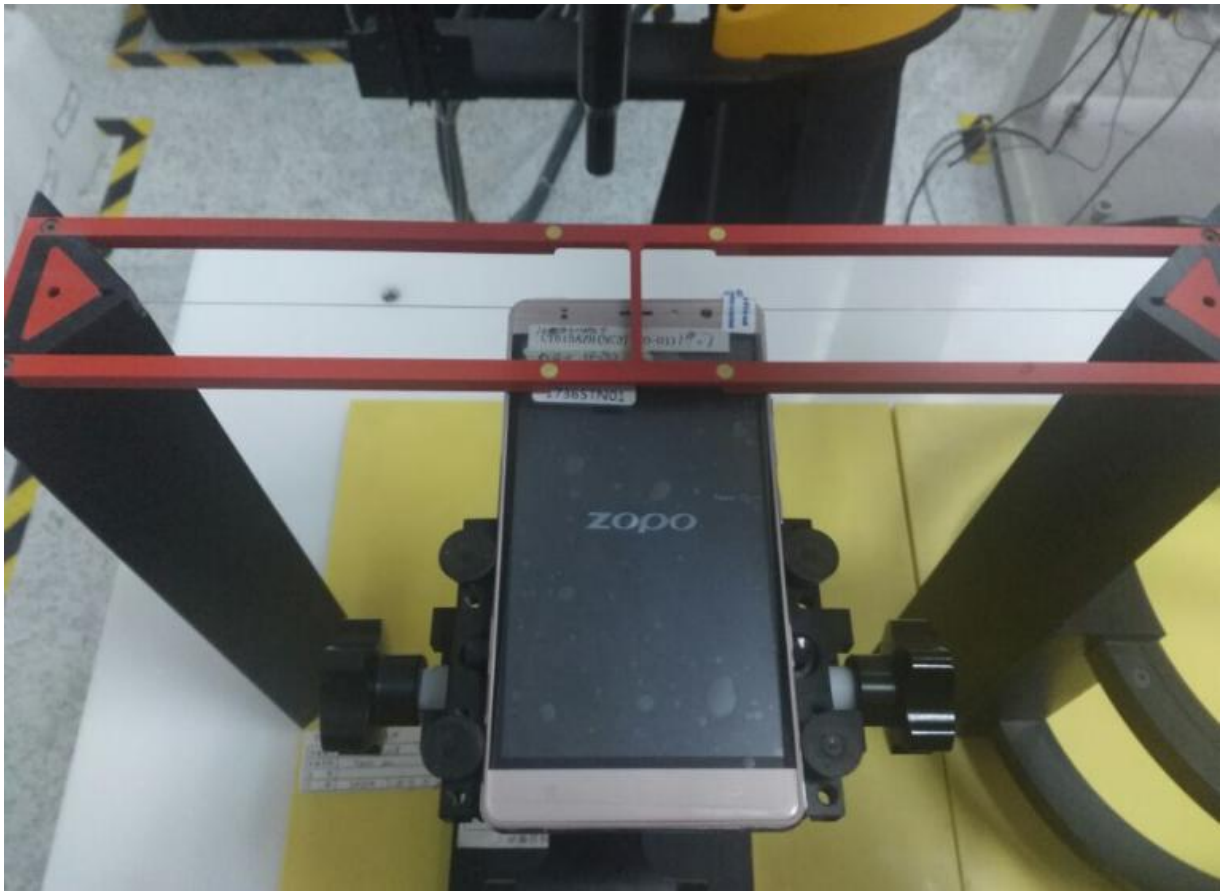

Picture 1: POSITION OF HAC RF

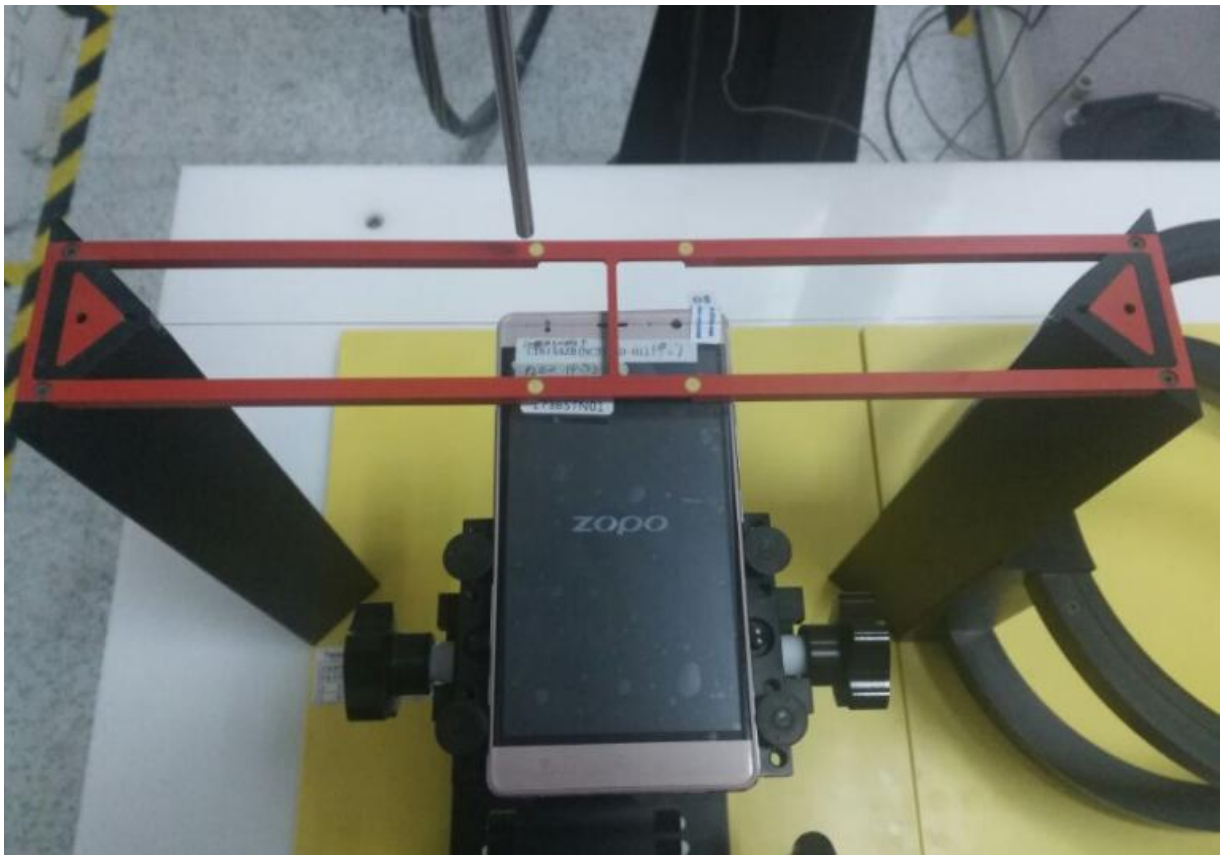

Picture 2: POSITION OF HAC T-Coil

ANNEX E: HAC System Check Results

HAC RF SYSTEM CHECK

HAC RF E-field system check 835MHz

Date: 17/05/2017
Communication System: UID 0, CW; Communication System Band: ITD835 (835.0 MHz); Frequency: 835 MHz;Communication System PAR: 0 dB
Medium parameters used: $\sigma = 0$ S/m, $\varepsilon_r = 1$; $\rho = 0$ kg/m^3
Phantom section: RF Section
Measurement Standard: DASY5 (IEEE/IEC/ANSI C63.19-2011)
DASY5 Configuration:

- Probe: ER3DV6 - SN2486; ConvF(1, 1, 1); Calibrated: 24/08/2015;
- Sensor-Surface: (Fix Surface)
- Electronics: DAE4 Sn1226; Calibrated: 28/09/2016
- Phantom: HAC Test Arch with AMCC; Type: SD HAC P01 BA;
- Measurement SW: DASY52, Version 52.8 (8); SEMCAD X Version 14.6.10 (7331)

Configuration/E Scan - measurement distance from the probe sensor center to CD835 = 10mm & 15mm/Hearing Aid Compatibility Test at 15mm distance (41x361x1): Interpolated grid: dx=0.5000 mm, dy=0.5000 mm
Device Reference Point: 0, 0, -6.3 mm
Reference Value = 105.8 V/m; Power Drift = -0.00 dB
Applied MIF = 0.00 dB
RF audio interference level = 40.40 dBV/m
Emission category: M3

MIF scaled E-field

Grid 1 **M4** **39.27 dBV/m**	Grid 2 **M3** **40.35 dBV/m**	Grid 3 **M3** **40.4 dBV/m**
Grid 4 **M4** **34.35 dBV/m**	Grid 5 **M4** **35.25 dBV/m**	Grid 6 **M4** **35.31 dBV/m**
Grid 7 **M4** **39.78 dBV/m**	Grid 8 **M3** **40.65 dBV/m**	Grid 9 **M3** **40.66 dBV/m**

Cursor:
Total = 40.66 dBV/m
E Category: M3
Location: -4, 73.5, 9.7 mm
Maximum value of Total (interpolated) = 107.9 V/m

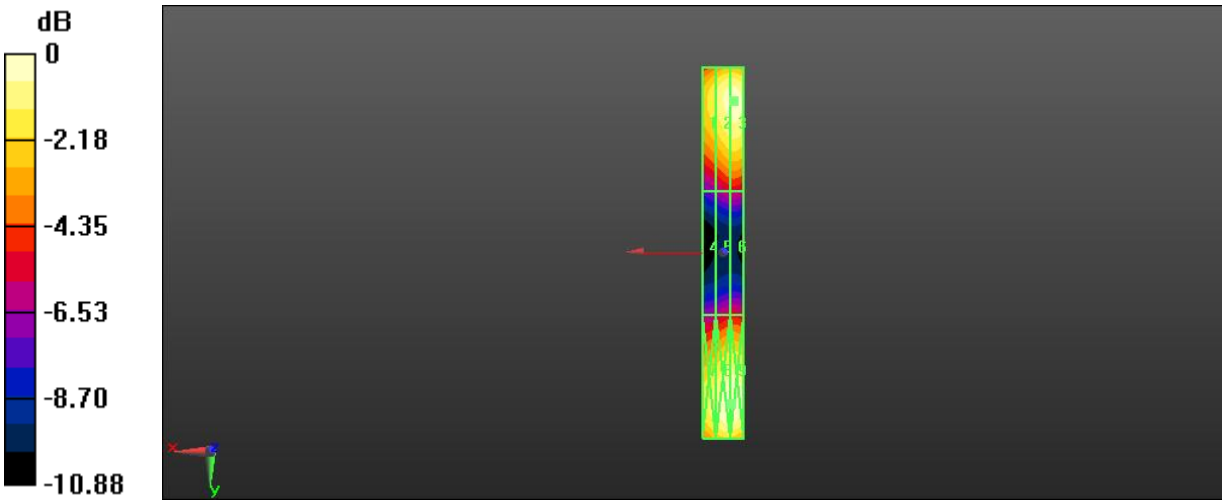

0 dB = 107.9 V/m = 40.66 dBV/m

HAC RF E-field system check 1880 MHz

Date: 17/05/2017

Communication System: UID 0, CW; Communication System Band: CD1880 (1880.0 MHz); Frequency: 1880 MHz;Communication System PAR: 0 dB

Medium parameters used: $\sigma = 0$ S/m, $\varepsilon_r = 1$; $\rho = 0$ kg/m^3

Phantom section: RF Section

Measurement Standard: DASY5 (IEEE/IEC/ANSI C63.19-2011)

DASY5 Configuration:

- Probe: ER3DV6 - SN2486; ConvF(1, 1, 1); Calibrated: 24/08/2015;
- Sensor-Surface: (Fix Surface)
- Electronics: DAE4 Sn1226; Calibrated: 28/09/2016
- Phantom: HAC Test Arch with AMCC; Type: SD HAC P01 BA;
- Measurement SW: DASY52, Version 52.8 (8); SEMCAD X Version 14.6.10 (7331)

Configuration 2/E Scan - measurement distance from the probe sensor center to CD1880 = 10mm & 15mm 2/Hearing Aid Compatibility Test at 15mm distance (41x181x1): Interpolated grid: dx=0.5000 mm, dy=0.5000 mm

Device Reference Point: 0, 0, -6.3 mm

Reference Value = 135.5 V/m; Power Drift = 0.03 dB

Applied MIF = 0.00 dB

RF audio interference level = 39.08 dBV/m

Emission category: M2

MIF scaled E-field

Grid 1 **M2** **38.34 dBV/m**	Grid 2 **M2** **39.08 dBV/m**	Grid 3 **M2** **39.08 dBV/m**
Grid 4 **M2** **36.24 dBV/m**	Grid 5 **M2** **36.67 dBV/m**	Grid 6 **M2** **36.77 dBV/m**
Grid 7 **M2** **38.42 dBV/m**	Grid 8 **M2** **39.14 dBV/m**	Grid 9 **M2** **39.18 dBV/m**

Cursor:

Total = 39.18 dBV/m

E Category: M2

Location: -4.5, 33, 9.7 mm

Maximum value of Total (interpolated) = 90.97 V/m

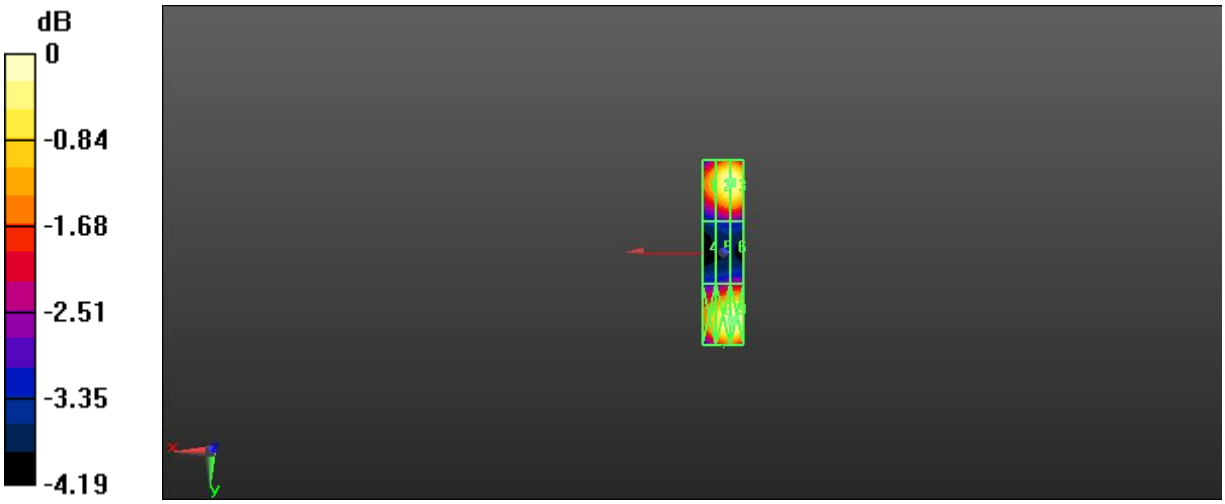

0 dB = 90.97 V/m = 39.18 dBV/m

ANNEX F: HAC RF Test Results

HAC RF E-Field

GSM850 HAC RF E-field Low

Date: 17/05/2017

Communication System: UID 0, GSM (0); Communication System Band: GSM850(824.0-849.0MHz); Frequency: 824.2 MHz;Communication System PAR: 9.191 dB

Medium parameters used: $\sigma = 0$ S/m, $\varepsilon_r = 1$; $\rho = 0$ kg/m^3

Phantom section: RF Section

Measurement Standard: DASY5 (IEEE/IEC/ANSI C63.19-2011)

DASY5 Configuration:

- Probe: ER3DV6 - SN2486; ConvF(1, 1, 1); Calibrated: 24/08/2015;
- Sensor-Surface: (Fix Surface)
- Electronics: DAE4 Sn1226; Calibrated: 28/09/2016
- Phantom: HAC Test Arch with AMCC; Type: SD HAC P01 BA;
- Measurement SW: DASY52, Version 52.8 (8); SEMCAD X Version 14.6.10 (7331)

GSM850/E Scan - ER3D: 15 mm from Probe Center to the Device/Hearing Aid Compatibility Test (101x101x1): Interpolated grid: dx=0.5000 mm, dy=0.5000 mm

Device Reference Point: 0, 0, -6.3 mm

Reference Value = 30.83 V/m; Power Drift = -0.01 dB

Applied MIF = 3.63 dB

RF audio interference level = 32.57 dBV/m

Emission category: M4

MIF scaled E-field

Grid 1 **M4** **29.47 dBV/m**	Grid 2 **M4** **31.53 dBV/m**	Grid 3 **M4** **31.53 dBV/m**
Grid 4 **M4** **30.93 dBV/m**	Grid 5 **M4** **32.57 dBV/m**	Grid 6 **M4** **32.56 dBV/m**
Grid 7 **M4** **32.17 dBV/m**	Grid 8 **M4** **33.6 dBV/m**	Grid 9 **M4** **33.59 dBV/m**

Category	Limits for E-Field Emissions < 960MHz	Limits for E-Field Emissions > 960MHz
M1	50 dBV/m - 55 dB V/m	40 dBV/m - 45 dB V/m
M2	45 dBV/m - 50 dB V/m	35 dBV/m - 40 dB V/m
M3	40 dBV/m - 45 dB V/m	30 dBV/m - 35 dB V/m
M4	<40 dBV/m	<30 dBV/m

Cursor:

Total = 33.60 dBV/m

E Category: M4

Location: -7.5, 25, 8.7 mm

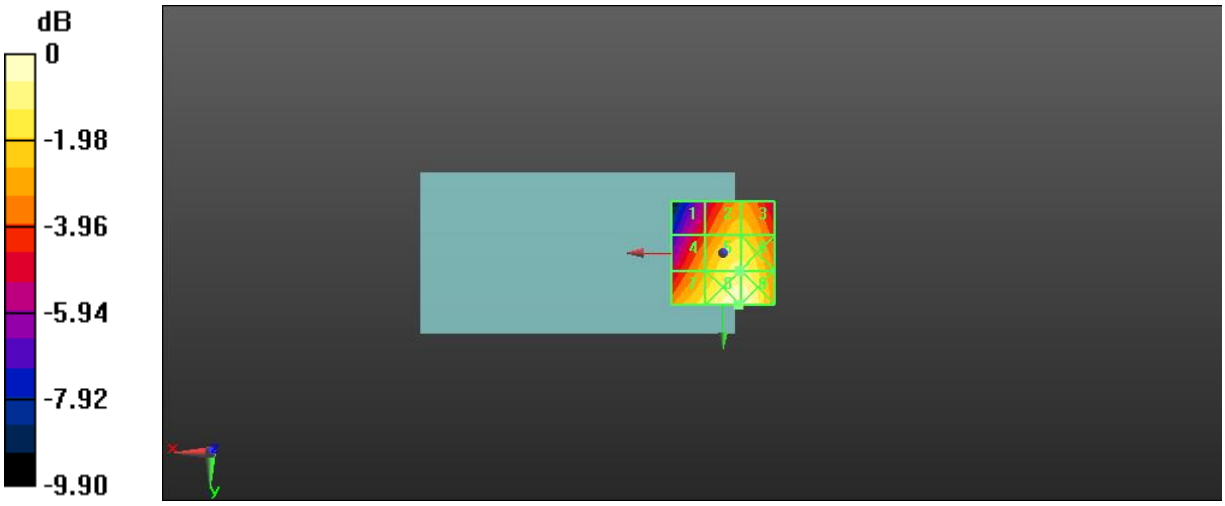

0 dB = 47.88 V/m = 33.60 dBV/m

GSM850 HAC RF E-field Mid

Date: 17/05/2017

Communication System: UID 0, GSM (0); Communication System Band: GSM850(824.0-849.0MHz); Frequency: 836.6 MHz;Communication System PAR: 9.191 dB

Medium parameters used: $\sigma = 0$ S/m, $\varepsilon_r = 1$; $\rho = 0$ kg/m^3

Phantom section: RF Section

Measurement Standard: DASY5 (IEEE/IEC/ANSI C63.19-2011)

DASY5 Configuration:

- Probe: ER3DV6 - SN2486; ConvF(1, 1, 1); Calibrated: 24/08/2015;
- Sensor-Surface: (Fix Surface)
- Electronics: DAE4 Sn1226; Calibrated: 28/09/2016
- Phantom: HAC Test Arch with AMCC; Type: SD HAC P01 BA;
- Measurement SW: DASY52, Version 52.8 (8); SEMCAD X Version 14.6.10 (7331)

GSM850/E Scan - ER3D: 15 mm from Probe Center to the Device 2/Hearing Aid Compatibility Test (101x101x1): Interpolated grid: dx=0.5000 mm, dy=0.5000 mm

Device Reference Point: 0, 0, -6.3 mm

Reference Value = 30.87 V/m; Power Drift = 0.05 dB

Applied MIF = 3.63 dB

RF audio interference level = 32.58 dBV/m

Emission category: M4

MIF scaled E-field

Grid 1 **M4** **29.42 dBV/m**	Grid 2 **M4** **31.49 dBV/m**	Grid 3 **M4** **31.48 dBV/m**
Grid 4 **M4** **30.98 dBV/m**	Grid 5 **M4** **32.58 dBV/m**	Grid 6 **M4** **32.58 dBV/m**
Grid 7 **M4** **32.25 dBV/m**	Grid 8 **M4** **33.65 dBV/m**	Grid 9 **M4** **33.64 dBV/m**

Category	Limits for E-Field Emissions < 960MHz	Limits for E-Field Emissions > 960MHz
M1	50 dBV/m - 55 dB V/m	40 dBV/m - 45 dB V/m
M2	45 dBV/m - 50 dB V/m	35 dBV/m - 40 dB V/m
M3	40 dBV/m - 45 dB V/m	30 dBV/m - 35 dB V/m
M4	<40 dBV/m	<30 dBV/m

Cursor:

Total = 33.65 dBV/m

E Category: M4

Location: -7.5, 25, 8.7 mm

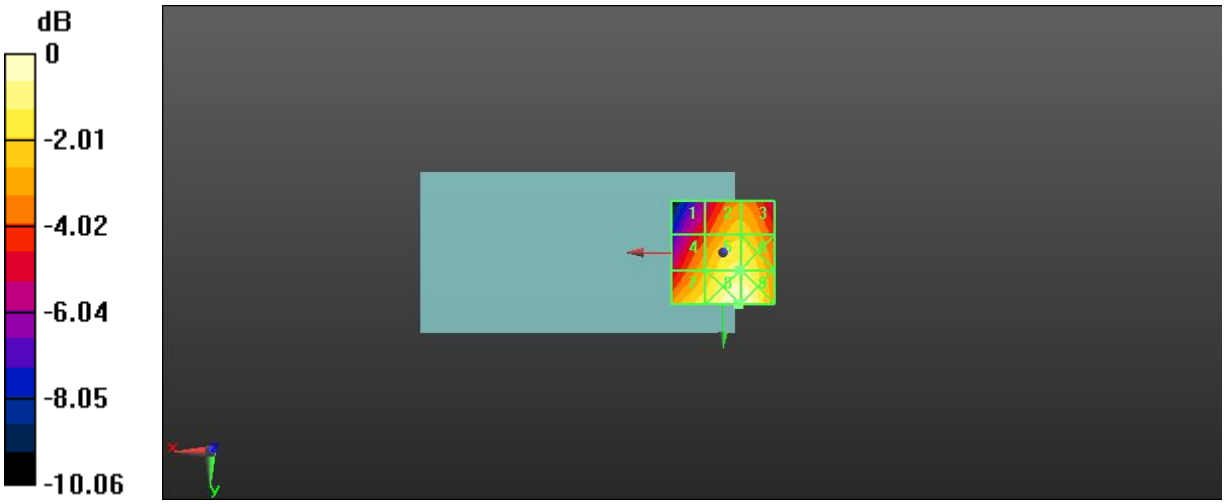

0 dB = 48.16 V/m = 33.65 dBV/m

GSM850 HAC RF E-field High

Date: 17/05/2017

Communication System: UID 0, GSM (0); Communication System Band: GSM850(824.0-849.0MHz); Frequency: 848.8 MHz;Communication System PAR: 9.191 dB

Medium parameters used: $\sigma = 0$ S/m, $\varepsilon_r = 1$; $\rho = 0$ kg/m^3

Phantom section: RF Section

Measurement Standard: DASY5 (IEEE/IEC/ANSI C63.19-2011)

DASY5 Configuration:

- Probe: ER3DV6 - SN2486; ConvF(1, 1, 1); Calibrated: 24/08/2015;
- Sensor-Surface: (Fix Surface)
- Electronics: DAE4 Sn1226; Calibrated: 28/09/2016
- Phantom: HAC Test Arch with AMCC; Type: SD HAC P01 BA;
- Measurement SW: DASY52, Version 52.8 (8); SEMCAD X Version 14.6.10 (7331)

GSM850/E Scan - ER3D: 15 mm from Probe Center to the Device 2 2/Hearing Aid Compatibility Test (101x101x1): Interpolated grid: dx=0.5000 mm, dy=0.5000 mm

Device Reference Point: 0, 0, -6.3 mm

Reference Value = 30.12 V/m; Power Drift = -0.05 dB

Applied MIF = 3.63 dB

RF audio interference level = 32.51 dBV/m

Emission category: M4

MIF scaled E-field

Grid 1 **M4** **29.06 dBV/m**	Grid 2 **M4** **31.25 dBV/m**	Grid 3 **M4** **31.25 dBV/m**
Grid 4 **M4** **30.88 dBV/m**	Grid 5 **M4** **32.51 dBV/m**	Grid 6 **M4** **32.51 dBV/m**
Grid 7 **M4** **32.41 dBV/m**	Grid 8 **M4** **33.76 dBV/m**	Grid 9 **M4** **33.75 dBV/m**

Category	Limits for E-Field Emissions < 960MHz	Limits for E-Field Emissions > 960MHz
M1	50 dBV/m - 55 dB V/m	40 dBV/m - 45 dB V/m
M2	45 dBV/m - 50 dB V/m	35 dBV/m - 40 dB V/m
M3	40 dBV/m - 45 dB V/m	30 dBV/m - 35 dB V/m
M4	<40 dBV/m	<30 dBV/m

Cursor:

Total = 33.76 dBV/m

E Category: M4

Location: -8, 25, 8.7 mm

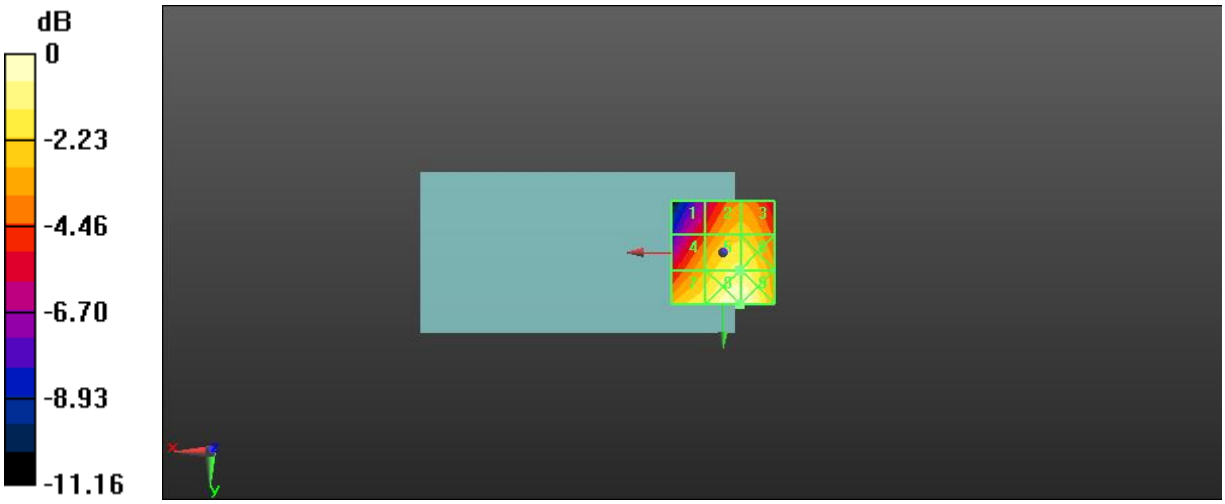

0 dB = 48.76 V/m = 33.76 dBV/m

GSM1900 HAC RF E-field Low

Date: 17/05/2017

Communication System: UID 0, GSM (0); Communication System Band: PCS1900(1850.0-1910.0MHz); Frequency: 1850.2 MHz;Communication System PAR: 9.191 dB

Medium parameters used: $\sigma = 0$ S/m, $\varepsilon_r = 1$; $\rho = 0$ kg/m^3

Phantom section: RF Section

Measurement Standard: DASY5 (IEEE/IEC/ANSI C63.19-2011)

DASY5 Configuration:

- Probe: ER3DV6 - SN2486; ConvF(1, 1, 1); Calibrated: 24/08/2015;
- Sensor-Surface: (Fix Surface)
- Electronics: DAE4 Sn1226; Calibrated: 28/09/2016
- Phantom: HAC Test Arch with AMCC; Type: SD HAC P01 BA;
- Measurement SW: DASY52, Version 52.8 (8); SEMCAD X Version 14.6.10 (7331)

GSM1900/E Scan - ER3D: 15 mm from Probe Center to the Device 2 2/Hearing Aid Compatibility Test (101x101x1): Interpolated grid: dx=0.5000 mm, dy=0.5000 mm

Device Reference Point: 0, 0, -6.3 mm

Reference Value = 7.762 V/m; Power Drift = -0.05 dB

Applied MIF = 3.63 dB

RF audio interference level = 25.67 dBV/m

Emission category: M4

MIF scaled E-field

Grid 1 **M4** **23.55 dBV/m**	Grid 2 **M4** **25.83 dBV/m**	Grid 3 **M4** **25.86 dBV/m**
Grid 4 **M4** **20.99 dBV/m**	Grid 5 **M4** **23.54 dBV/m**	Grid 6 **M4** **23.55 dBV/m**
Grid 7 **M4** **24.21 dBV/m**	Grid 8 **M4** **25.67 dBV/m**	Grid 9 **M4** **25.58 dBV/m**

Category	Limits for E-Field Emissions < 960MHz	Limits for E-Field Emissions > 960MHz
M1	50 dBV/m - 55 dB V/m	40 dBV/m - 45 dB V/m
M2	45 dBV/m - 50 dB V/m	35 dBV/m - 40 dB V/m
M3	40 dBV/m - 45 dB V/m	30 dBV/m - 35 dB V/m
M4	<40 dBV/m	<30 dBV/m

Cursor:

Total = 25.86 dBV/m

E Category: M4

Location: -10, -25, 8.7 mm

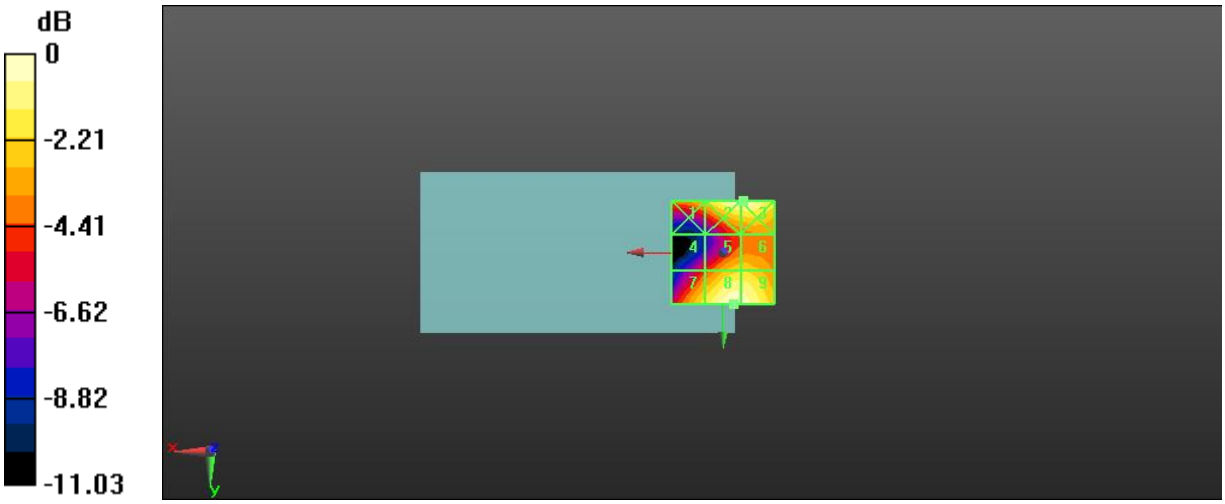

0 dB = 19.64 V/m = 25.86 dBV/m

GSM1900 HAC RF E-field Mid

Date: 17/05/2017

Communication System: UID 0, GSM (0); Communication System Band: PCS1900(1850.0-1910.0MHz); Frequency: 1880 MHz;Communication System PAR: 9.191 dB

Medium parameters used: $\sigma = 0$ S/m, $\varepsilon_r = 1$; $\rho = 0$ kg/m^3

Phantom section: RF Section

Measurement Standard: DASY5 (IEEE/IEC/ANSI C63.19-2011)

DASY5 Configuration:

- Probe: ER3DV6 - SN2486; ConvF(1, 1, 1); Calibrated: 24/08/2015;
- Sensor-Surface: (Fix Surface)
- Electronics: DAE4 Sn1226; Calibrated: 28/09/2016
- Phantom: HAC Test Arch with AMCC; Type: SD HAC P01 BA;
- Measurement SW: DASY52, Version 52.8 (8); SEMCAD X Version 14.6.10 (7331)

GSM1900/E Scan - ER3D: 15 mm from Probe Center to the Device 2 2 2/Hearing Aid Compatibility Test (101x101x1): Interpolated grid: dx=0.5000 mm, dy=0.5000 mm

Device Reference Point: 0, 0, -6.3 mm

Reference Value = 8.687 V/m; Power Drift = -0.02 dB

Applied MIF = 3.63 dB

RF audio interference level = 25.80 dBV/m

Emission category: M4

MIF scaled E-field

Grid 1 **M4** **24.61 dBV/m**	Grid 2 **M4** **26.54 dBV/m**	Grid 3 **M4** **26.53 dBV/m**
Grid 4 **M4** **20.48 dBV/m**	Grid 5 **M4** **23.58 dBV/m**	Grid 6 **M4** **23.61 dBV/m**
Grid 7 **M4** **24.36 dBV/m**	Grid 8 **M4** **25.8 dBV/m**	Grid 9 **M4** **25.67 dBV/m**

Category	Limits for E-Field Emissions < 960MHz	Limits for E-Field Emissions > 960MHz
M1	50 dBV/m - 55 dB V/m	40 dBV/m - 45 dB V/m
M2	45 dBV/m - 50 dB V/m	35 dBV/m - 40 dB V/m
M3	40 dBV/m - 45 dB V/m	30 dBV/m - 35 dB V/m
M4	<40 dBV/m	<30 dBV/m

Cursor:

Total = 26.54 dBV/m

E Category: M4

Location: -7.5, -25, 8.7 mm

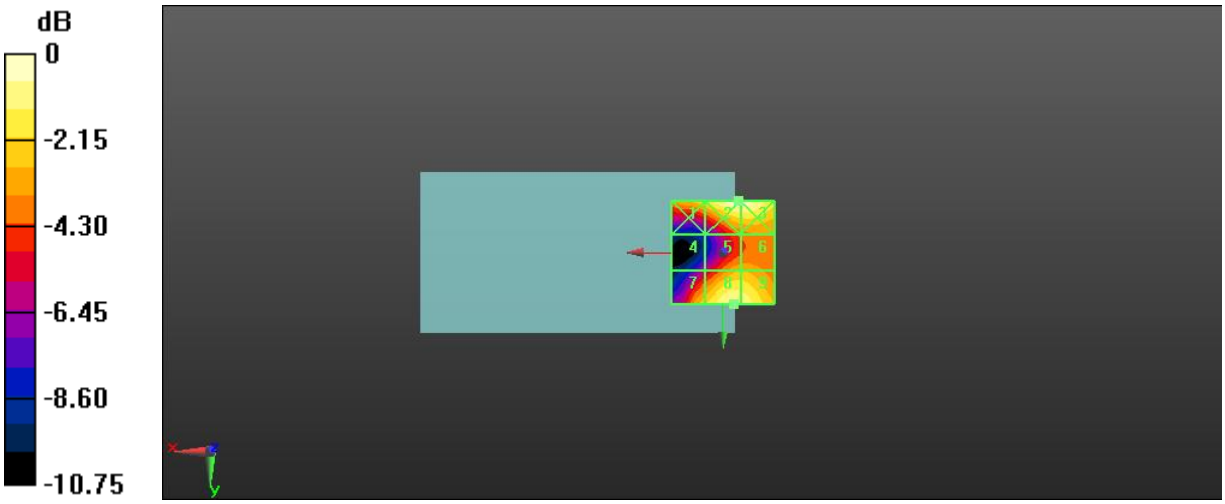

0 dB = 21.23 V/m = 26.54 dBV/m

GSM1900 HAC RF E-field High

Date: 17/05/2017

Communication System: UID 0, GSM (0); Communication System Band: PCS1900(1850.0-1910.0MHz); Frequency: 1909.8 MHz;Communication System PAR: 9.191 dB

Medium parameters used: $\sigma = 0$ S/m, $\varepsilon_r = 1$; $\rho = 0$ kg/m^3

Phantom section: RF Section

Measurement Standard: DASY5 (IEEE/IEC/ANSI C63.19-2011)

DASY5 Configuration:

- Probe: ER3DV6 - SN2486; ConvF(1, 1, 1); Calibrated: 24/08/2015;
- Sensor-Surface: (Fix Surface)
- Electronics: DAE4 Sn1226; Calibrated: 28/09/2016
- Phantom: HAC Test Arch with AMCC; Type: SD HAC P01 BA;
- Measurement SW: DASY52, Version 52.8 (8); SEMCAD X Version 14.6.10 (7331)

GSM1900/E Scan - ER3D: 15 mm from Probe Center to the Device 2 2 3/Hearing Aid Compatibility Test (101x101x1): Interpolated grid: dx=0.5000 mm, dy=0.5000 mm

Device Reference Point: 0, 0, -6.3 mm

Reference Value = 6.901 V/m; Power Drift = -0.04 dB

Applied MIF = 3.63 dB

RF audio interference level = 24.47 dBV/m

Emission category: M4

MIF scaled E-field

Grid 1 **M4** **22.95 dBV/m**	Grid 2 **M4** **25.34 dBV/m**	Grid 3 **M4** **25.34 dBV/m**
Grid 4 **M4** **20.13 dBV/m**	Grid 5 **M4** **22.74 dBV/m**	Grid 6 **M4** **22.82 dBV/m**
Grid 7 **M4** **23.61 dBV/m**	Grid 8 **M4** **24.47 dBV/m**	Grid 9 **M4** **24.36 dBV/m**

Category	Limits for E-Field Emissions < 960MHz	Limits for E-Field Emissions > 960MHz
M1	50 dBV/m - 55 dB V/m	40 dBV/m - 45 dB V/m
M2	45 dBV/m - 50 dB V/m	35 dBV/m - 40 dB V/m
M3	40 dBV/m - 45 dB V/m	30 dBV/m - 35 dB V/m
M4	<40 dBV/m	<30 dBV/m

Cursor:

Total = 25.34 dBV/m

E Category: M4

Location: -9, -25, 8.7 mm

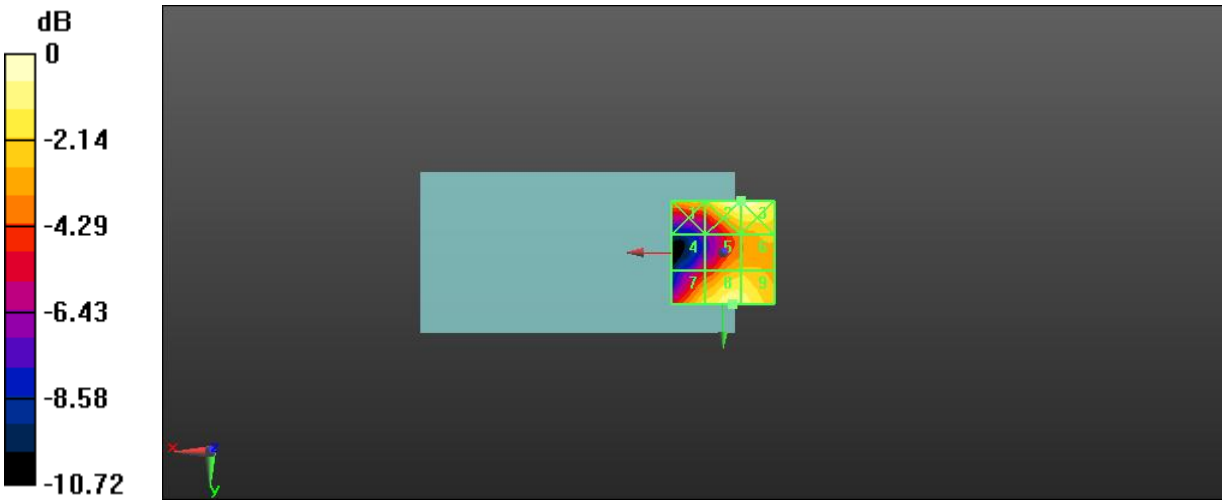

0 dB = 18.49 V/m = 25.34 dBV/m

ANNEXG: HAC T-Coil Test Results

GSM850 T-coil y (transversal)

Date: 18/05/2017
Communication System: UID 0, GSM (0); Communication System Band: GSM850(824.0-849.0MHz); Frequency: 836.6 MHz;Communication System PAR: 9.191 dB
Medium parameters used: $\sigma = 0$ S/m, $\varepsilon_r = 1$; $\rho = 0$ kg/m^3
Phantom section: TCoil Section
Measurement Standard: DASY5 (IEEE/IEC/ANSI C63.19-2011)
DASY5 Configuration:

- Probe: AM1DV3 - 3073; ;
- Sensor-Surface: 0mm (Fix Surface)
- Electronics: DAE4 Sn1226; Calibrated: 28/09/2016
- Phantom: HAC Test Arch with AMCC; Type: SD HAC P01 BA;
- Measurement SW: DASY52, Version 52.8 (8); SEMCAD X Version 14.6.10 (7331)

GSM850/General Scans/y (transversal) 4.2mm 50 x 50/ABM Signal(x,y,z) (13x13x1): Measurement grid: dx=10mm, dy=10mm
Signal Type: Audio File (.wav) 48k_voice_1kHz_1s.wav
Output Gain: 40.41
Measure Window Start: 300ms
Measure Window Length: 1000ms
BWC applied: 0.15 dB
Device Reference Point: 0, 0, -6.3 mm

Cursor:
ABM1 comp = -7.20 dBA/m
BWC Factor = 0.15 dB
Location: 4.2, 8.3, 3.7 mm

GSM850/General Scans/y (transversal) 4.2mm 50 x 50/ABM SNR(x,y,z) (13x13x1): Measurement grid: dx=10mm, dy=10mm
Signal Type: Audio File (.wav) 48k_voice_1kHz_1s.wav
Output Gain: 40.41
Measure Window Start: 300ms
Measure Window Length: 1000ms
BWC applied: 0.15 dB
Device Reference Point: 0, 0, -6.3 mm

Cursor:
ABM1/ABM2 = 27.60 dB
ABM1 comp = -7.34 dBA/m
BWC Factor = 0.15 dB
Location: 0, 8.3, 3.7 mm

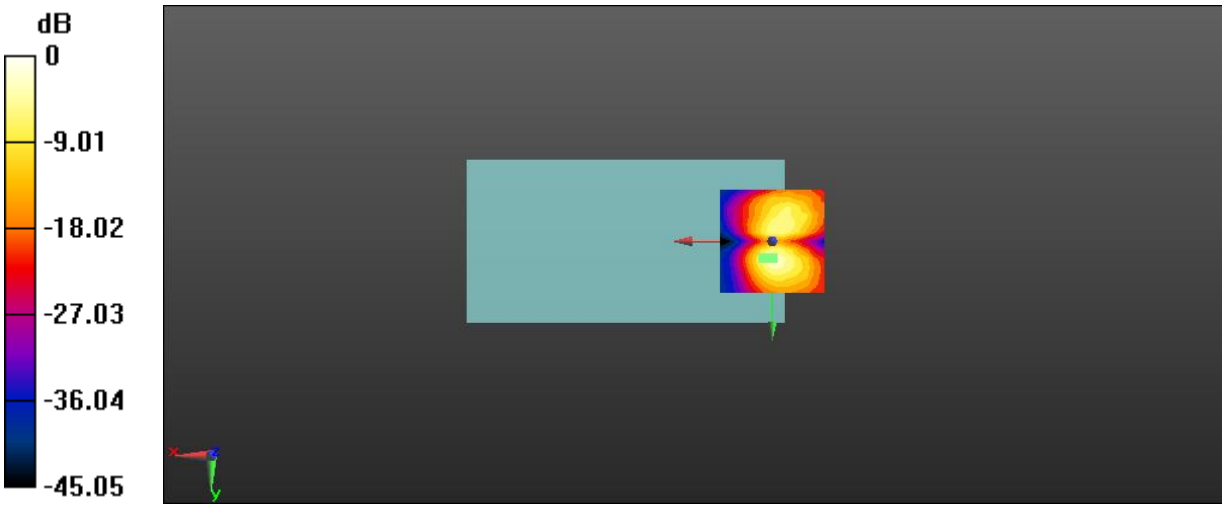

0 dB = 0.4366 A/m = -7.20 dBA/m

GSM850 T-coil z (axial)

Date: 18/05/2017

Communication System: UID 0, GSM (0); Communication System Band: GSM850(824.0-849.0MHz); Frequency: 836.6 MHz;Communication System PAR: 9.191 dB

Medium parameters used: $\sigma = 0$ S/m, $\varepsilon_r = 1$; $\rho = 0$ kg/m^3

Phantom section: TCoil Section

Measurement Standard: DASY5 (IEEE/IEC/ANSI C63.19-2011)

DASY5 Configuration:

- Probe: AM1DV3 - 3073; ;
- Sensor-Surface: 0mm (Fix Surface)
- Electronics: DAE4 Sn1226; Calibrated: 28/09/2016
- Phantom: HAC Test Arch with AMCC; Type: SD HAC P01 BA;
- Measurement SW: DASY52, Version 52.8 (8); SEMCAD X Version 14.6.10 (7331)

GSM850/General Scans/z (axial) 4.2mm 50 x 50/ABM Signal(x,y,z) (13x13x1):

Measurement grid: dx=10mm, dy=10mm

Signal Type: Audio File (.wav) 48k_voice_1kHz_1s.wav

Output Gain: 40.41

Measure Window Start: 300ms

Measure Window Length: 1000ms

BWC applied: 0.15 dB

Device Reference Point: 0, 0, -6.3 mm

Cursor:

ABM1 comp = 1.36 dBA/m

BWC Factor = 0.15 dB

Location: 0, 0, 3.7 mm

GSM850/General Scans/z (axial) 4.2mm 50 x 50/ABM SNR(x,y,z) (13x13x1):

Measurement grid: dx=10mm, dy=10mm

Signal Type: Audio File (.wav) 48k_voice_1kHz_1s.wav

Output Gain: 40.41

Measure Window Start: 300ms

Measure Window Length: 1000ms

BWC applied: 0.15 dB

Device Reference Point: 0, 0, -6.3 mm

Cursor:

ABM1/ABM2 = 21.44 dB

ABM1 comp = 1.36 dBA/m

BWC Factor = 0.15 dB

Location: 0, 0, 3.7 mm

GSM850/General Scans/z (axial) wideband at best S/N/ABM Freq Resp(x,y,z,f) (1x1x1): Measurement grid: dx=10mm, dy=10mm

Signal Type: Audio File (.wav) 48k_voice_300-3000_2s.wav
Output Gain: 78.96
Measure Window Start: 300ms
Measure Window Length: 2000ms
BWC applied: 10.80 dB
Device Reference Point: 0, 0, -6.3 mm

Cursor:
Diff = 1.39 dB
BWC Factor = 10.80 dB
Location: -0.8, -0.3, 3.7 mm

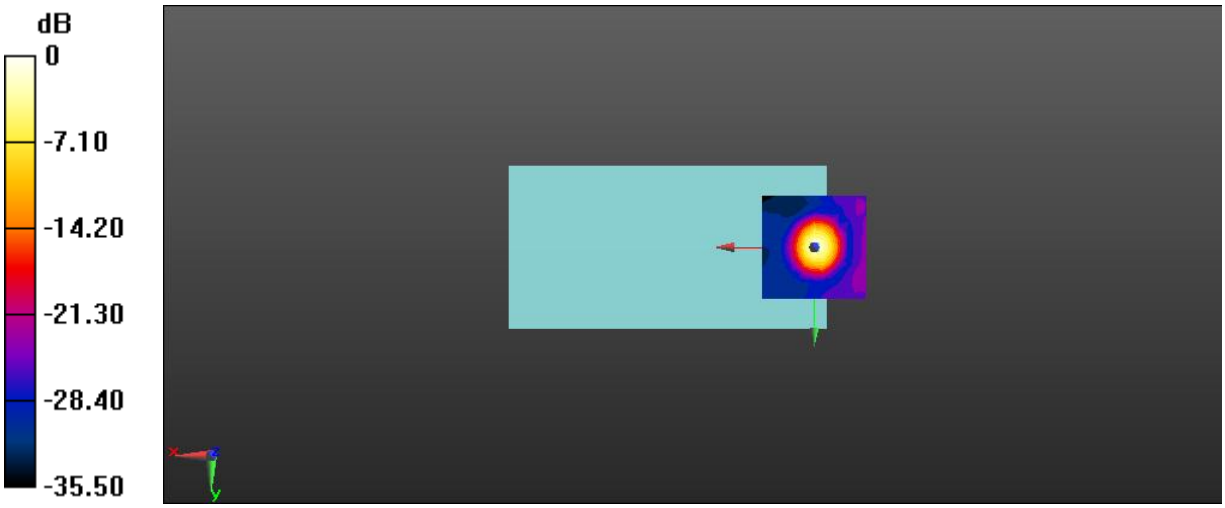

0 dB = 1.169 A/m = 1.36 dBA/m

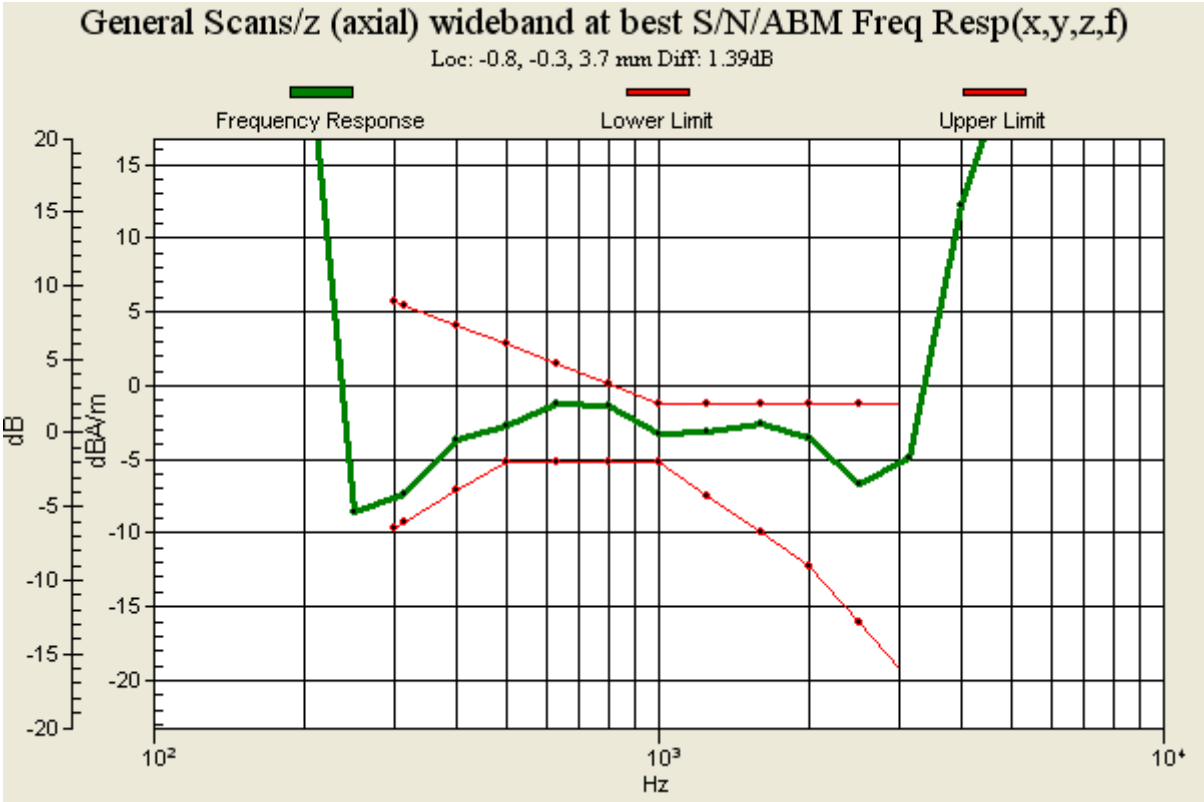

GSM1900 T-coil y (transversal)

Date: 18/05/2017

Communication System: UID 0, GSM (0); Communication System Band: PCS1900(1850.0-1910.0MHz); Frequency: 1880 MHz;Communication System PAR: 9.191 dB

Medium parameters used: $\sigma = 0$ S/m, $\varepsilon_r = 1$; $\rho = 0$ kg/m^3

Phantom section: TCoil Section

Measurement Standard: DASY5 (IEEE/IEC/ANSI C63.19-2011)

DASY5 Configuration:

- Probe: AM1DV3 - 3073; ;
- Sensor-Surface: 0mm (Fix Surface)
- Electronics: DAE4 Sn1226; Calibrated: 28/09/2016
- Phantom: HAC Test Arch with AMCC; Type: SD HAC P01 BA;
- Measurement SW: DASY52, Version 52.8 (8); SEMCAD X Version 14.6.10 (7331)

GSM1900/General Scans/y (transversal) 4.2mm 50 x 50/ABM Signal(x,y,z) (13x13x1): Measurement grid: dx=10mm, dy=10mm

Signal Type: Audio File (.wav) 48k_voice_1kHz_1s.wav

Output Gain: 40.41

Measure Window Start: 300ms

Measure Window Length: 1000ms

BWC applied: 0.15 dB

Device Reference Point: 0, 0, -6.3 mm

Cursor:

ABM1 comp = -7.49 dBA/m

BWC Factor = 0.15 dB

Location: 4.2, 8.3, 3.7 mm

GSM1900/General Scans/y (transversal) 4.2mm 50 x 50/ABM SNR(x,y,z) (13x13x1): Measurement grid: dx=10mm, dy=10mm

Signal Type: Audio File (.wav) 48k_voice_1kHz_1s.wav

Output Gain: 40.41

Measure Window Start: 300ms

Measure Window Length: 1000ms

BWC applied: 0.15 dB

Device Reference Point: 0, 0, -6.3 mm

Cursor:

ABM1/ABM2 = 28.47 dB

ABM1 comp = -11.17 dBA/m

BWC Factor = 0.15 dB

Location: -4.2, 8.3, 3.7 mm

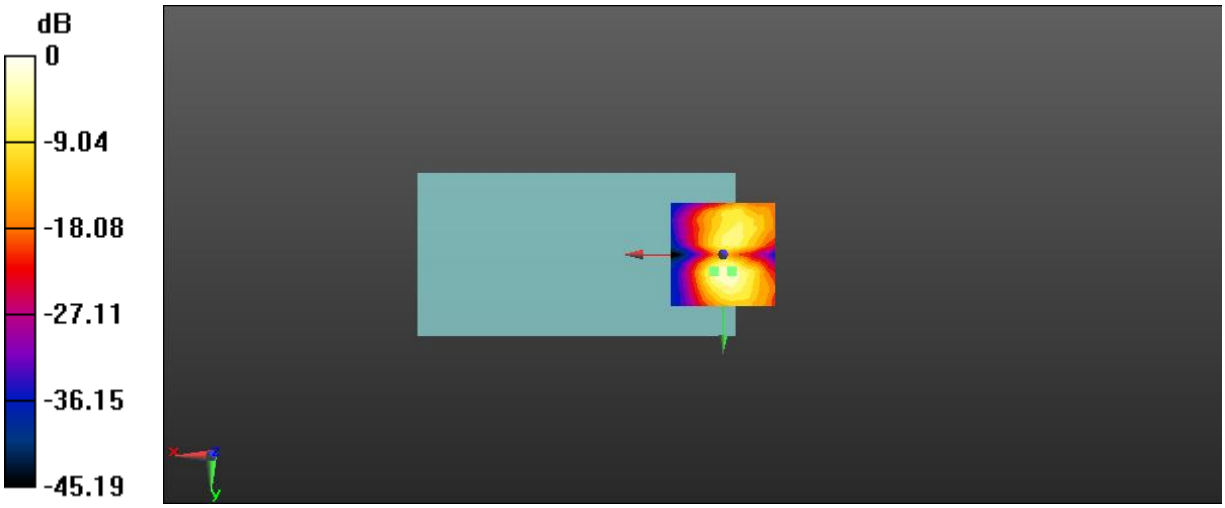

0 dB = 0.4223 A/m = -7.49 dBA/m

GSM1900 T-coil z (axial)

Date: 18/05/2017

Communication System: UID 0, GSM (0); Communication System Band: PCS1900(1850.0-1910.0MHz); Frequency: 1880 MHz;Communication System PAR: 9.191 dB

Medium parameters used: $\sigma = 0$ S/m, $\varepsilon_r = 1$; $\rho = 0$ kg/m^3

Phantom section: TCoil Section

Measurement Standard: DASY5 (IEEE/IEC/ANSI C63.19-2011)

DASY5 Configuration:

- Probe: AM1DV3 - 3073; ;
- Sensor-Surface: 0mm (Fix Surface)
- Electronics: DAE4 Sn1226; Calibrated: 28/09/2016
- Phantom: HAC Test Arch with AMCC; Type: SD HAC P01 BA;
- Measurement SW: DASY52, Version 52.8 (8); SEMCAD X Version 14.6.10 (7331)

GSM1900/General Scans/z (axial) 4.2mm 50 x 50/ABM Signal(x,y,z) (13x13x1):

Measurement grid: dx=10mm, dy=10mm

Signal Type: Audio File (.wav) 48k_voice_1kHz_1s.wav

Output Gain: 40.41

Measure Window Start: 300ms

Measure Window Length: 1000ms

BWC applied: 0.15 dB

Device Reference Point: 0, 0, -6.3 mm

Cursor:

ABM1 comp = 1.00 dBA/m

BWC Factor = 0.15 dB

Location: 0, 0, 3.7 mm

GSM1900/General Scans/z (axial) 4.2mm 50 x 50/ABM SNR(x,y,z) (13x13x1):

Measurement grid: dx=10mm, dy=10mm

Signal Type: Audio File (.wav) 48k_voice_1kHz_1s.wav

Output Gain: 40.41

Measure Window Start: 300ms

Measure Window Length: 1000ms

BWC applied: 0.15 dB

Device Reference Point: 0, 0, -6.3 mm

Cursor:

ABM1/ABM2 = 24.97 dB

ABM1 comp = 1.00 dBA/m

BWC Factor = 0.15 dB

Location: 0, 0, 3.7 mm

GSM1900/General Scans/z (axial) wideband at best S/N/ABM Freq Resp(x,y,z,f)

(1x1x1): Measurement grid: dx=10mm, dy=10mm
Signal Type: Audio File (.wav) 48k_voice_300-3000_2s.wav
Output Gain: 78.96
Measure Window Start: 300ms
Measure Window Length: 2000ms
BWC applied: 10.80 dB
Device Reference Point: 0, 0, -6.3 mm
Cursor:
Diff = 0.85 dB
BWC Factor = 10.80 dB
Location: -0.8, -0.2, 3.7 mm

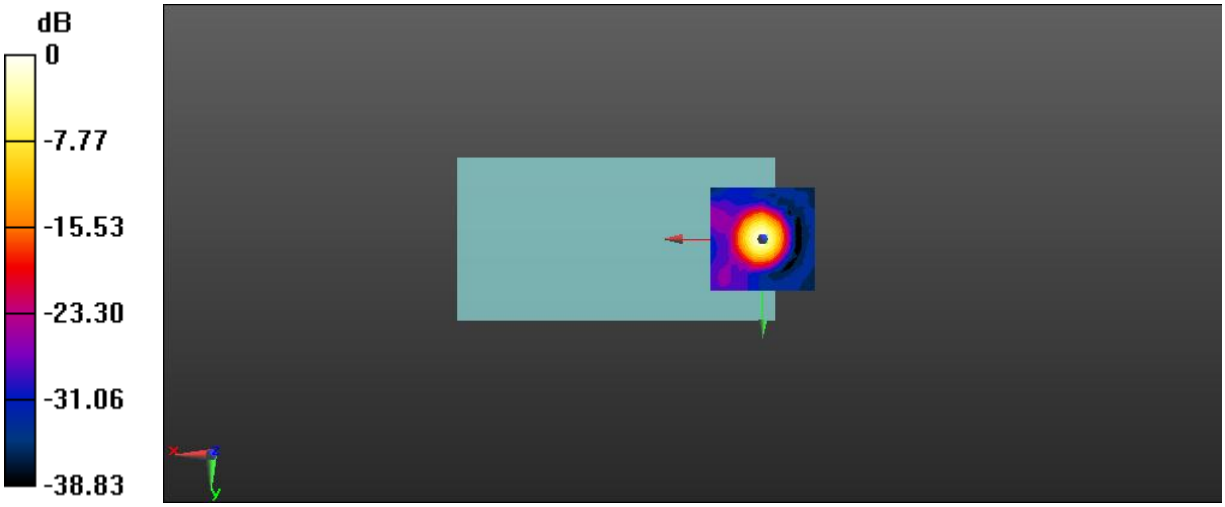

0 dB = 1.121 A/m = 1.00 dBA/m

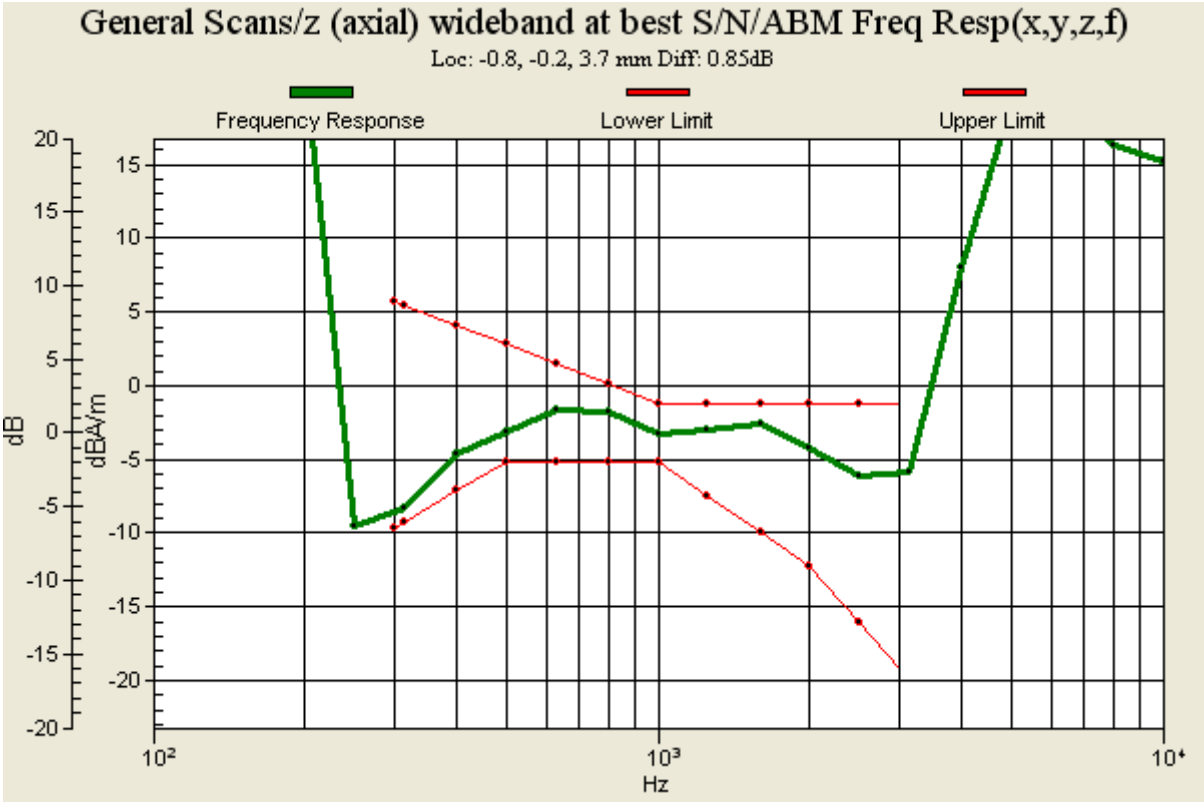

WCDMA Band II T-coil y (transversal)

Date: 18/05/2017

Communication System: UID 0, WCDMA (0); Communication System Band: BAND 2; Frequency: 1880 MHz;Communication System PAR: 0 dB

Medium parameters used: $\sigma = 0$ S/m, $\varepsilon_r = 1$; $\rho = 0$ kg/m^3

Phantom section: TCoil Section

Measurement Standard: DASY5 (IEEE/IEC/ANSI C63.19-2011)

DASY5 Configuration:

- Probe: AM1DV3 - 3073; ;
- Sensor-Surface: 0mm (Fix Surface)
- Electronics: DAE4 Sn1226; Calibrated: 28/09/2016
- Phantom: HAC Test Arch with AMCC; Type: SD HAC P01 BA;
- Measurement SW: DASY52, Version 52.8 (8); SEMCAD X Version 14.6.10 (7331)

WCDMA BAND II/General Scans/y (transversal) 4.2mm 50 x 50/ABM Signal(x,y,z) (13x13x1): Measurement grid: dx=10mm, dy=10mm

Signal Type: Audio File (.wav) 48k_voice_1kHz_1s.wav

Output Gain: 40.41

Measure Window Start: 300ms

Measure Window Length: 1000ms

BWC applied: 0.15 dB

Device Reference Point: 0, 0, -6.3 mm

Cursor:

ABM1 comp = -8.17 dBA/m

BWC Factor = 0.15 dB

Location: 0, 8.3, 3.7 mm

WCDMA BAND II/General Scans/y (transversal) 4.2mm 50 x 50/ABM SNR(x,y,z) (13x13x1): Measurement grid: dx=10mm, dy=10mm

Signal Type: Audio File (.wav) 48k_voice_1kHz_1s.wav

Output Gain: 40.41

Measure Window Start: 300ms

Measure Window Length: 1000ms

BWC applied: 0.15 dB

Device Reference Point: 0, 0, -6.3 mm

Cursor:

ABM1/ABM2 = 32.51 dB

ABM1 comp = -9.48 dBA/m

BWC Factor = 0.15 dB

Location: 0, 12.5, 3.7 mm

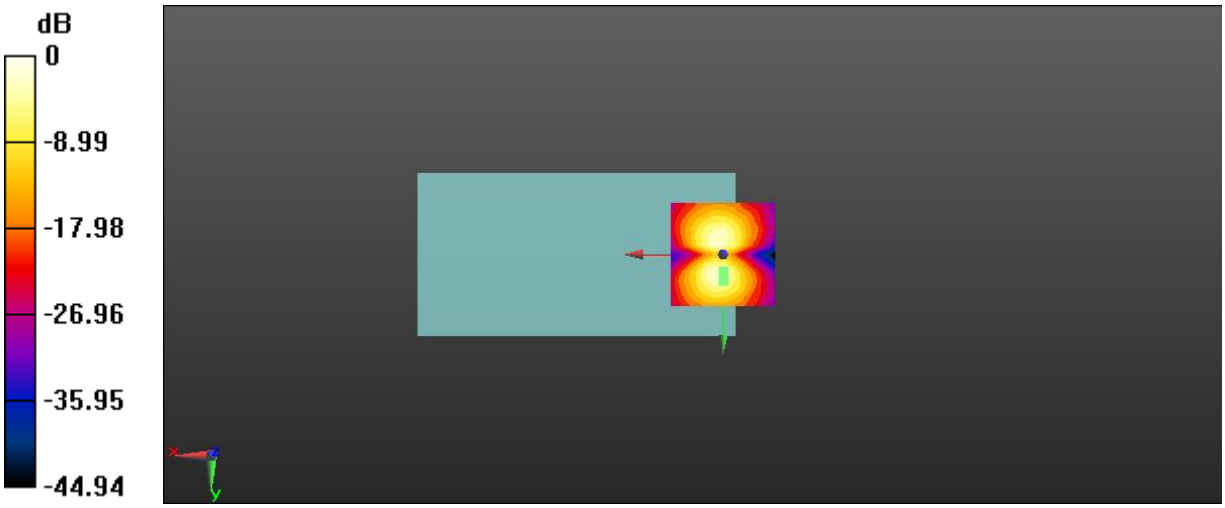

0 dB = 0.3906 A/m = -8.17 dBA/m

WCDMA Band II T-coil z (axial)

Date: 18/05/2017

Communication System: UID 0, WCDMA (0); Communication System Band: BAND 2; Frequency: 1880 MHz;Communication System PAR: 0 dB

Medium parameters used: $\sigma = 0$ S/m, $\varepsilon_r = 1$; $\rho = 0$ kg/m^3

Phantom section: TCoil Section

Measurement Standard: DASY5 (IEEE/IEC/ANSI C63.19-2011)

DASY5 Configuration:

- Probe: AM1DV3 - 3073; ;
- Sensor-Surface: 0mm (Fix Surface)
- Electronics: DAE4 Sn1226; Calibrated: 28/09/2016
- Phantom: HAC Test Arch with AMCC; Type: SD HAC P01 BA;
- Measurement SW: DASY52, Version 52.8 (8); SEMCAD X Version 14.6.10 (7331)

WCDMA BAND II/General Scans/z (axial) 4.2mm 50 x 50/ABM Signal(x,y,z) (13x13x1): Measurement grid: dx=10mm, dy=10mm

Signal Type: Audio File (.wav) 48k_voice_1kHz_1s.wav

Output Gain: 40.41

Measure Window Start: 300ms

Measure Window Length: 1000ms

BWC applied: 0.15 dB

Device Reference Point: 0, 0, -6.3 mm

Cursor:

ABM1 comp = 0.77 dBA/m

BWC Factor = 0.15 dB

Location: 0, 0, 3.7 mm

WCDMA BAND II/General Scans/z (axial) 4.2mm 50 x 50/ABM SNR(x,y,z) (13x13x1): Measurement grid: dx=10mm, dy=10mm

Signal Type: Audio File (.wav) 48k_voice_1kHz_1s.wav

Output Gain: 40.41

Measure Window Start: 300ms

Measure Window Length: 1000ms

BWC applied: 0.15 dB

Device Reference Point: 0, 0, -6.3 mm

Cursor:

ABM1/ABM2 = 34.07 dB

ABM1 comp = -3.33 dBA/m

BWC Factor = 0.15 dB

Location: -4.2, 0, 3.7 mm

WCDMA BAND II/General Scans/z (axial) wideband at best S/N/ABM Freq Resp(x,y,z,f) (1x1x1): Measurement grid: dx=10mm, dy=10mm

Signal Type: Audio File (.wav) 48k_voice_300-3000_2s.wav
Output Gain: 78.96
Measure Window Start: 300ms
Measure Window Length: 2000ms
BWC applied: 10.80 dB
Device Reference Point: 0, 0, -6.3 mm

Cursor:
Diff = 1.13 dB
BWC Factor = 10.80 dB
Location: -2.8, 0, 3.7 mm

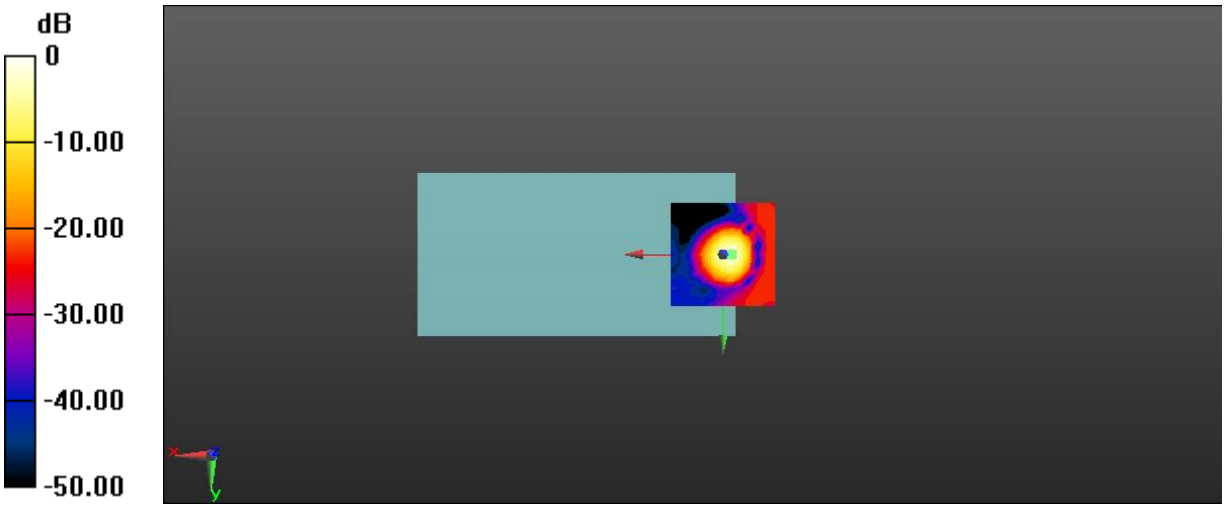

0 dB = 1.092 A/m = 0.77 dBA/m

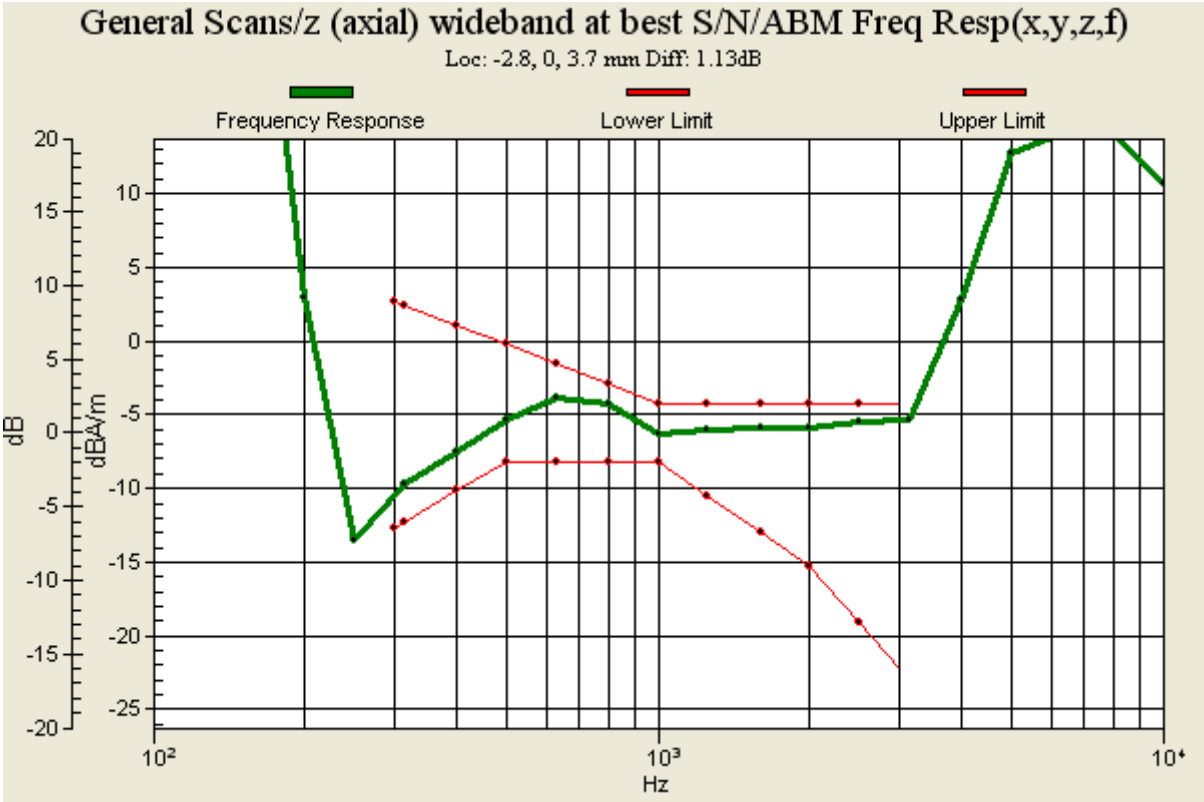

WCDMA Band V T-coil y (transversal)

Date: 18/05/2017

Communication System: UID 0, WCDMA (0); Communication System Band: BAND 5; Frequency: 836.6 MHz;Communication System PAR: 0 dB

Medium parameters used: $\sigma = 0$ S/m, $\varepsilon_r = 1$; $\rho = 0$ kg/m^3

Phantom section: TCoil Section

Measurement Standard: DASY5 (IEEE/IEC/ANSI C63.19-2007)

DASY5 Configuration:

- Probe: AM1DV3 - 3073; ;
- Sensor-Surface: 0mm (Fix Surface)
- Electronics: DAE4 Sn1226; Calibrated: 28/09/2016
- Phantom: HAC Test Arch with AMCC; Type: SD HAC P01 BA;
- Measurement SW: DASY52, Version 52.8 (8); SEMCAD X Version 14.6.10 (7331)

WCDMA BAND V/General Scans/y (transversal) 4.2mm 50 x 50/ABM Signal(x,y,z) (13x13x1): Measurement grid: dx=10mm, dy=10mm

Signal Type: Audio File (.wav) 48k_voice_1kHz_1s.wav

Output Gain: 40.41

Measure Window Start: 300ms

Measure Window Length: 1000ms

BWC applied: 0.15 dB

Device Reference Point: 0, 0, -6.3 mm

Cursor:

ABM1 comp = -8.20 dBA/m

BWC Factor = 0.15 dB

Location: 0, 8.3, 3.7 mm

WCDMA BAND V/General Scans/y (transversal) 4.2mm 50 x 50/ABM SNR(x,y,z) (13x13x1): Measurement grid: dx=10mm, dy=10mm

Signal Type: Audio File (.wav) 48k_voice_1kHz_1s.wav

Output Gain: 40.41

Measure Window Start: 300ms

Measure Window Length: 1000ms

BWC applied: 0.15 dB

Device Reference Point: 0, 0, -6.3 mm

Cursor:

ABM1/ABM2 = 32.29 dB

ABM1 comp = -9.55 dBA/m

BWC Factor = 0.15 dB

Location: 0, 12.5, 3.7 mm

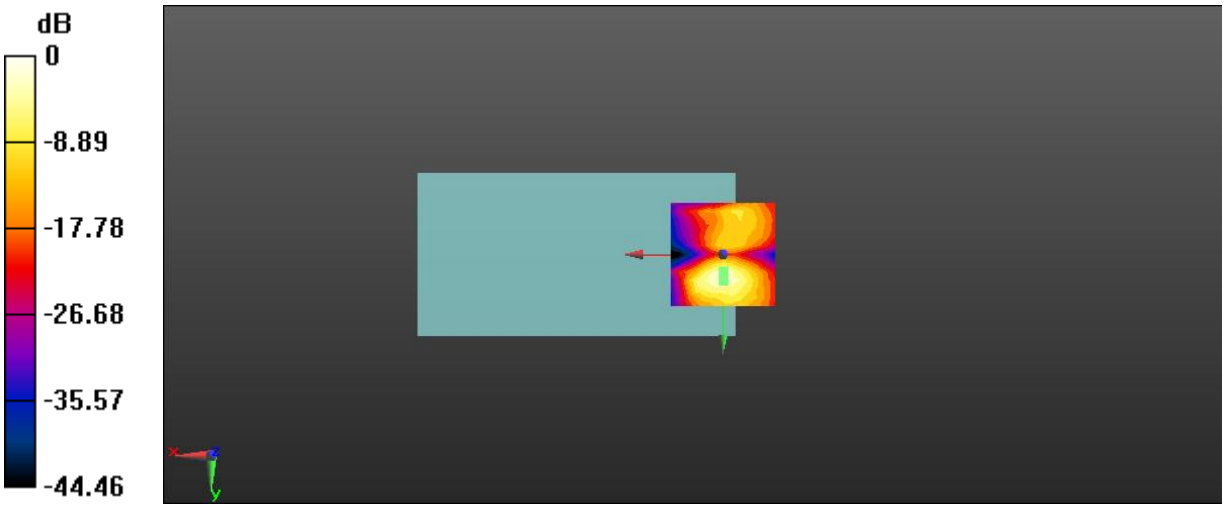

0 dB = 0.3890 A/m = -8.20 dBA/m

WCDMA Band V T-coil y (transversal) z (axial)

Date: 18/05/2017

Communication System: UID 0, WCDMA (0); Communication System Band: BAND 5; Frequency: 836.6 MHz;Communication System PAR: 0 dB

Medium parameters used: $\sigma = 0$ S/m, $\varepsilon_r = 1$; $\rho = 0$ kg/m^3

Phantom section: TCoil Section

Measurement Standard: DASY5 (IEEE/IEC/ANSI C63.19-2007)

DASY5 Configuration:

- Probe: AM1DV3 - 3073; ;
- Sensor-Surface: 0mm (Fix Surface)
- Electronics: DAE4 Sn1226; Calibrated: 28/09/2016
- Phantom: HAC Test Arch with AMCC; Type: SD HAC P01 BA;
- Measurement SW: DASY52, Version 52.8 (8); SEMCAD X Version 14.6.10 (7331)

WCDMA BAND V/General Scans/z (axial) 4.2mm 50 x 50/ABM Signal(x,y,z) (13x13x1): Measurement grid: dx=10mm, dy=10mm

Signal Type: Audio File (.wav) 48k_voice_1kHz_1s.wav

Output Gain: 40.41

Measure Window Start: 300ms

Measure Window Length: 1000ms

BWC applied: 0.15 dB

Device Reference Point: 0, 0, -6.3 mm

Cursor:

ABM1 comp = 0.69 dBA/m

BWC Factor = 0.15 dB

Location: 0, 0, 3.7 mm

WCDMA BAND V/General Scans/z (axial) 4.2mm 50 x 50/ABM SNR(x,y,z) (13x13x1): Measurement grid: dx=10mm, dy=10mm

Signal Type: Audio File (.wav) 48k_voice_1kHz_1s.wav

Output Gain: 40.41

Measure Window Start: 300ms

Measure Window Length: 1000ms

BWC applied: 0.15 dB

Device Reference Point: 0, 0, -6.3 mm

Cursor:

ABM1/ABM2 = 34.21 dB

ABM1 comp = -3.36 dBA/m

BWC Factor = 0.15 dB

Location: -4.2, 0, 3.7 mm

WCDMA BAND V/General Scans/z (axial) wideband at best S/N/ABM Freq

Resp(x,y,z,f) (1x1x1): Measurement grid: dx=10mm, dy=10mm
Signal Type: Audio File (.wav) 48k_voice_300-3000_2s.wav
Output Gain: 78.96
Measure Window Start: 300ms
Measure Window Length: 2000ms
BWC applied: 10.80 dB
Device Reference Point: 0, 0, -6.3 mm
Cursor:
Diff = 1.29 dB
BWC Factor = 10.80 dB
Location: -3.1, 0, 3.7 mm

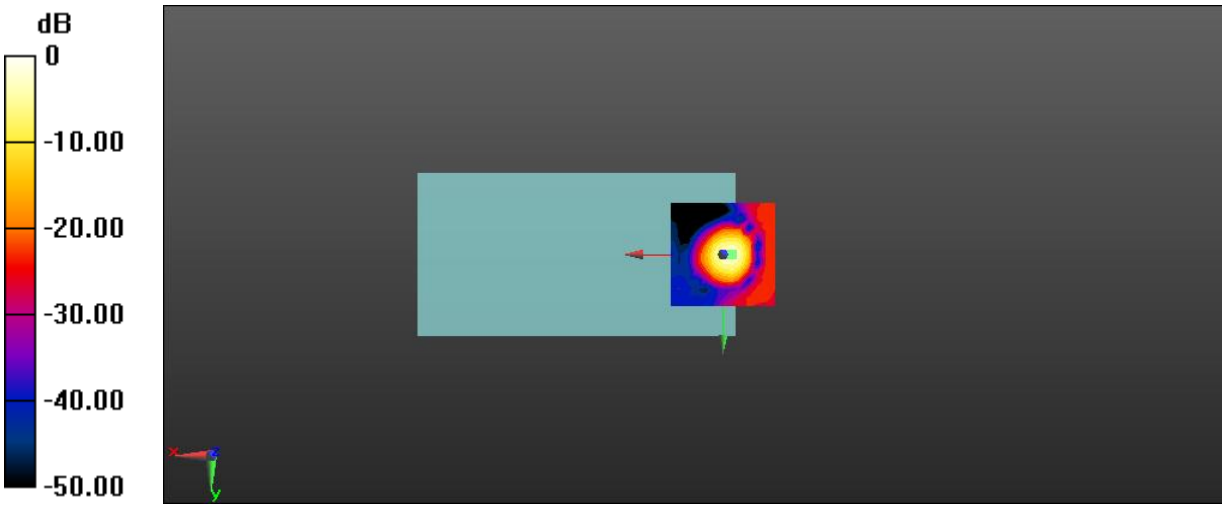
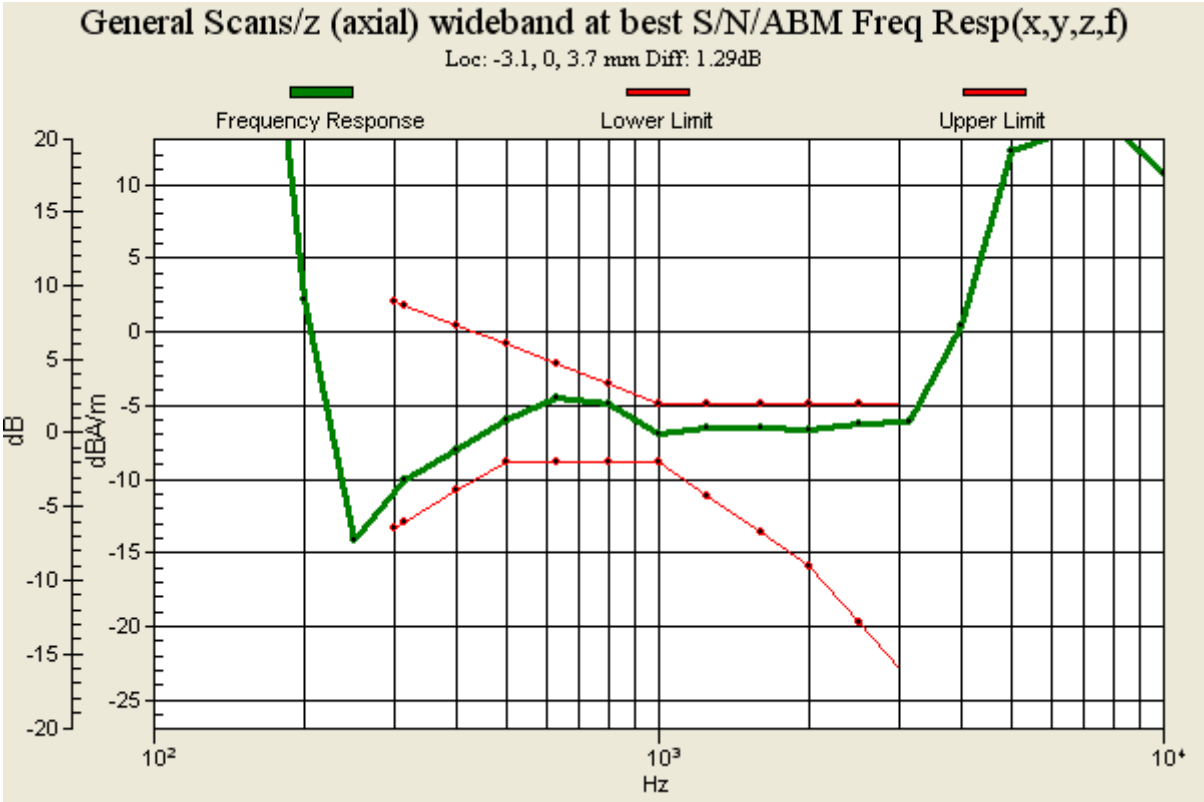
0 dB = 1.083 A/m = 0.69 dBA/m