ELECTROMAGNETIC EMISSIONS COMPLIANCE REPORT
INTENTIONAL RADIATOR CERTIFICATION TO
FCC PART 74 SUBPART H REQUIREMENT

OF

Wireless Microphone Transmitter

MODEL NO.: KST-6U

BRAND NAME: N/A

FCC ID: QSRKST6U

REPORT NO: HST0612MIC0202F

ISSUE DATE: December 26, 2006

Prepared for

Enping Karsect Electronics Corp Ltd
No.32, Xinping Road, Enping, Guangdong, China.

Prepared by

Guangzhou Huesent Testing Service Co.,Ltd.

d.b.a.

Guangzhou Huesent Testing Service Co.,Ltd.
Self-ordained 68# courtyard, No. 91, Dongguanzhuang Road,
Guangzhou, Guangdong, China.
TEL: 86-020-87221905 FAX: 86-020-87223892

VERIFICATION OF COMPLIANCE

Applicant……..…:	Enping Karsect Electronics Corp Ltd
Address……..:	No.32 Xinping Road Enping GuangDong China.
Manufacturer……:	Enping Karsect Electronics Corp Ltd
Address……..:	No.32 Xinping Road Enping GuangDong China.
Product Description..:	Wireless Microphone Transmitter
Brand Name……..:	N/A
Model Number……:	KST-6U
Serial Number……..:	N/A
File Number……..:	HST0612MIC0202F
Date of Test……..:	December 16, 2006 ~ December 24, 2006

We hereby certify that:

The report for the equipment was prepared by Guangzhou Huesent Testing Service Co.,Ltd. The test data, data evaluation, test procedures, and equipment configurations shown in this report were made in accordance with the procedures given in TIA/EIA 603; ANSI C 63.4:2001 and the sample tested as described in this report is in compliance with the FCC Rules Part 74 Subpart H.

The test results of this report relate only to the tested sample identified in this report.

Approved by:_____ **Date of Issue:** Dec 26, 2006

(Henly.xie/QA Manager)

Guangzhou Huesent Testing Service Co.,Ltd.

Table of Contents

1. GENERAL INFORMATION **4**

2. SYSTEM TEST CONFIGURATION **6**

3. SUMMARY OF TEST RESULTS **9**

4. DESCRIPTION OF TEST MODES **9**

5. MAXIMUM TRANSMITTER POWRE **10**

6. MODULATION CHARACTERISTICS **13**

7. FREQUENCY TOLERANCE **21**

8. EMISSION BANDWIDTH **25**

9. UNWANTED RADIATION **28**

APPENDIX 1

PHOTOGRAPHS OF SETUP **34**

1. GENERAL INFORMATION

1.1 Product Description

The Enping Karsect Electronics Corp Ltd, Model: KST-6U (referred to as the EUT in this report). The EUT is a 13 channels Wireless Microphone designed as Low Power Auxiliary Stations for transmitting voice only. It is designed by way of utilizing the FM modulation achieves the system operating.

A major technical descriptions of EUT is described as following:

A). Frequency Tolerance: 0.00061% (0.005%)

B). Communication Type: Voice/Tone only

C). Modulation: FM

D). Emission type: F3E

E). Emission designator: 53K3F3E (2M+2DK, M=12, D=36.63, K=1, Necessary Bandwidth = 53.2KHz)

F). Emission Bandwidth: 58.8 KHz (Limit: 200 KHz)

G).Peak Frequency Deviation: 36.63 KHz (Limit<±75 KHz)

H).Audio Frequency Response: 14.21 KHz

I). Maximum Transmitter Power: 3.12 mW (Limit: 250 mW)

J). Output power Modification: Fixed can't be change

K). Unwanted Radiation:

1). At least 60 dB (Limit 25 dB) on any frequency removed from the center of the authorized bandwidth by more than 50% up to and including 100% of the authorized bandwidth.

2). At least 65 dB (Limit 35 dB) on any frequency removed from the center of the authorized bandwidth by more than 100% up to and including 250% of the authorized bandwidth.

3). At least 27 dB (Limit 17.38 dB) on any frequency removed from the center of authorized bandwidth by more than 250%)

L). Antenna Designation: Integral

M). Power Supply: 3V dc by battery

N). DC Voltage= 2.54 and DC Current= 26.5 mA into the final stage for normal operation over the power range

O). Battery Endpoint: DC 2.4V

P). Operating Frequency Range and Channels

Frequency Range: 720 MHz – 806 MHz

CH01 – 720.00MHz CH02 – 763.00MHz CH03 – 806.00MHz

Q). Effective distance: 120M

1.2 Related Submittal(s) / Grant (s)

This submittal(s) (test report) is intended for FCC ID filing to comply with the FCC Part 74, Subpart H Rules.

1.3 Test Methodology

The radiated emission testing was performed according to the procedures of ANSI TIA/EIA 603 and FCC CFR 47 2.1046, 2.1047, 2.1049, 2.1051, 2.1053, 2.1055 and 2.1057

1.4 Test Facility

The open area test site used to collect the radiated data is located on the address of Compliance Engineering Service (China), No. 6, Jinao industrial park, No.35 Jukeng Road, Dashuikeng Village, Guanlan Town, Baoan District, Shenzhen, China. The Open Area Test Site is constructed and calibrated to meet the FCC requirements in documents ANSI C63.4: 2001 and CISPR 22/EN 55022 requirements. FCC Registered Test Site Number：101879.

1.5 Special Accessories

Not available for this EUT intended for grant.

1.6 Equipment Modifications

Not available for this EUT intended for grant.

1.7 Differences between Models

Model Name	Differences
None	None

2. System Test Configuration

2.1 EUT Configuration

The EUT configuration for testing is installed on RF field strength measurement to meet the Commission's requirement and operating in a manner which intends to maximize its emission characteristics in a continuous normal application.

2.2 EUT Exercise

The Transmitter was operated in the normal operating mode. The TX frequency was fixed which was for the purpose of the measurements.

2.3 GENERAL TECHNICAL REQUIREMENTS

a). Section 74.861 (e) - 1: Maximum transmitter power less than 50mW

b). Section 74.861 (e) - 3: Peak Frequency Deviation less than ±75 KHz

c). Section 74.861 (e) - 4: Frequency Tolerance less than 0.005%

d). Section 74.861 (e) - 5: Emission Bandwidth shall less than 200KHz

e). Section 74.861 (e) - 6: Unwanted radiation

According to Section 74.861 (e) – 6, the mean power of emission shall be attenuated below the mean output power of the transmitter in accordance with the following schedule:

1). At least 25 dB on any frequency removed from the center of the authorized bandwidth by more than 50% up to and including 100% of the authorized bandwidth.

2). At least 35 dB on any frequency removed from the center of the authorized bandwidth by more than 100% up to and including 250% of the authorized bandwidth.

3). At least 43 + 10 log10 (T) dB on any frequency removed from the center of the authorized bandwidth by more than 250%.

2.4 Configuration of Tested System

Fig. 2-1 Configuration of Tested System

Table 2-1 Equipment Used in Tested System

Item	Equipment	Mfr/Brand	Model/Type No.	FCC ID	Series No.	Note
E-1	Wireless Microphone Transmitter	N/A	KST-6U	QSRKST6U	N/A	***EUT***

3. SUMMARY OF TEST RESULTS

FCC Rules	Description Of Test	Result
§74.861 (e)-1	Carrier Power	Compliant
§74.861 (e)-3	Frequency Deviation	Compliant
§74.861 (e)-4	Frequency Tolerance	Compliant
§74.861 (e)-5	Operating Bandwidth	Compliant
§74.861 (e)-6	Unwanted Radiation	Compliant

4. DESCRIPTION OF TEST MODES

The EUT (Wireless Microphone) has been tested under normal operating condition. Three channels (the top one806.00 MHz, the middle one-763.00 MHz and the bottom one—720.00 MHz) have been chosen for testing.

5. MAXIMUMN TRANSMITTER POWER

5.1 PROVISIONS APPLICABLE

According to FCC Part 74 Section 74.861(e) – 1: The power of the measured unmodulated carrier power at the output of the transmitter power amplifier may not exceed 250mW

5.2 MEASUREMENT PROCEDURE

1). On a test site, the EUT shall be placed on a turntable and in the position closest to the normal use as declared by the user.

2). The test antenna shall be oriented initially for vertical polarization located 3m from the EUT to correspond to the transmitter.

3). The output of the antenna shall be connected to the measuring receiver and either a peak or quasi-peak detector was used for the measurement as indicated on the report. The detector selection is based on how close the emission level was approaching the limit.

4). The transmitter shall be switched on; if possible, without the modulation and the measurement receiver shall be tuned to the frequency of the transmitter under test.

5). The test antenna shall be raised and lowered through the specified range of height until the measuring receiver detects a maximum signal level.

6). The transmitter shall than be rotated through 360°in the horizontal plane, until the maximum signal level is detected by the measuring receiver.

7). The test antenna shall be raised and lowered again through the specified range of height until the measuring receiver detects a maximum signal level.

8). The maximum signal level detected by the measuring receiver shall be noted.

9). Replace the antenna with a proper Antenna (substitution antenna).

10). The substitution antenna shall be oriented for vertical polarization and, if necessary, the length of the substitution antenna shall be adjusted to correspond to the frequency of transmitting.

11). The substitution antenna shall be connected to a calibrated signal generator.

12). If necessary, the input attenuator setting of the measuring receiver shall be adjusted in order to increase the sensitivity of the measuring receiver.

13). The test antenna shall be raised and lowered through the specified range of the height to ensure that the maximum signal is received.

14). The input signal to substitution antenna shall be adjusted to the level that produces a level detected by the measuring receiver, that is equal to the level noted while the transmitter radiated power was measured, corrected for the change of input attenuation setting of the measuring receiver.

15). The input level to the substitution antenna shall be recorded as power level in dBm, corrected for any change of input attenuator setting of the measuring receiver.

16). The measurement shall be repeated with the test antenna and the substitution antenna oriented for horizontal polarization.

17). The measure of the effective radiated power is the larger of the two levels recorded, at the input to the substitution antenna, corrected for the gain of the substitution antenna if necessary.

5.3 TEST SETUP BLOCK DAIGRAM(setup block diagram of configuration)

TEST SETUP OF SUBSTITUTION METHOD:

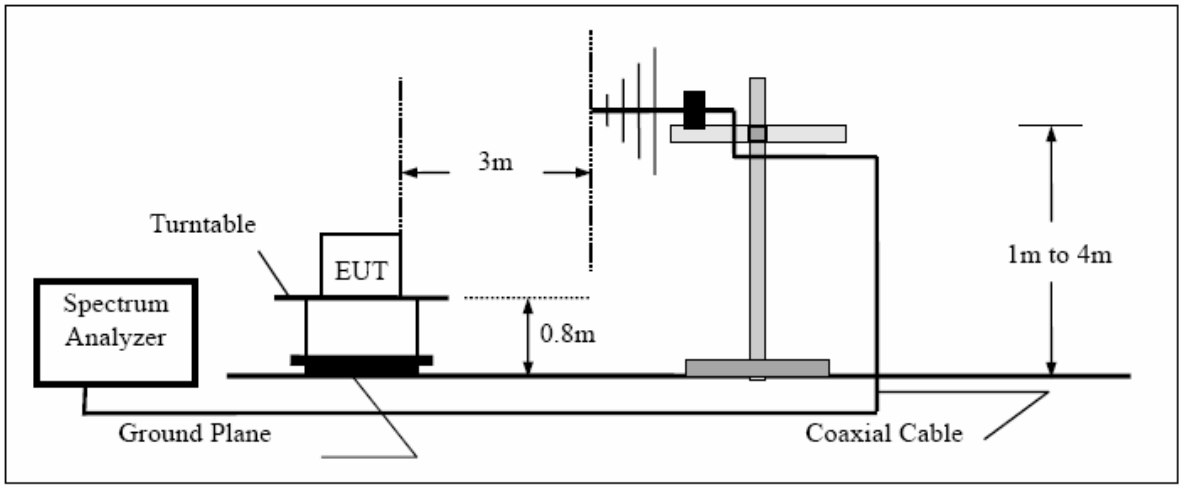

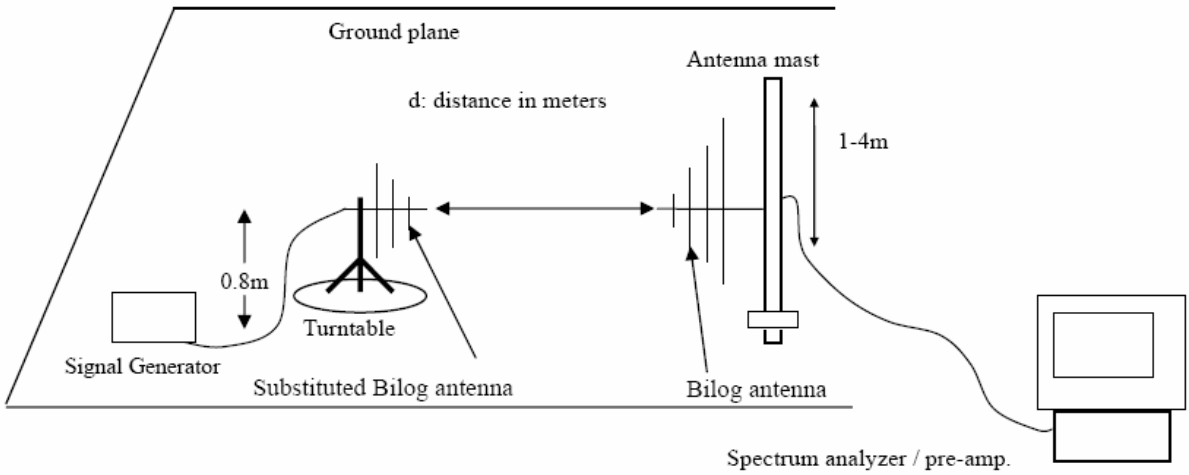

5.4 MEASUREMENT EQUIPMENT USED:

Open Area Test Site					
EQUIPMENT TYPE	**MFR**	**MODEL NO.**	**SERIAL NO.**	**LAST CAL.**	**CAL DUE.**
Spectrum Analyzer	ADVANTEST	R3132	N/A	06/08/2006	06/07/2007
EMI Test Receiver	HP	8546A	3448A00232	06/08/2006	06/07/2007
Pre-Amplifier	HP	8447D	2944A07999	06/08/2006	06/07/2007
Bi-Log Antenna	EMCO	3142	9910-1436	06/08/2006	06/07/2007
Bi-Log Antenna	SCHAFFNER	CBL6143	5082	06/08/2006	06/07/2007
CABLE	TIME MICROWAVE	LMR-400	N-TYPE04	06/08/2006	06/07/2007

5.5 TEST RESULT

The Output Power of Wireless Microphone

The top channel-806.00 MHz

Freq. (MHz)	Antenna Polarity	Reading (dBuV)	SGO/P (dBm)	Ant. Gain (dB)	Dipole Gain (dBi)	Cable (dB)	Corrected Power		Limit (W)
							(dBm)	(mW)	
806.000	V	-29.27	-12.24	10.81	0	1.71	4.94	3.12	0.25
806.000	H	-30.18	-15.32	10.81	0	1.71	-5.28	0.30	0.25

The middle channel-763.00MHz

Freq. (MHz)	Antenna Polarity	Reading (dBuV)	SGO/P (dBm)	Ant. Gain (dB)	Dipole Gain (dBi)	Cable (dB)	Corrected Power		Limit (W)
							(dBm)	(mW)	
763.00	V	-20.14	-5.14	11.74	0	1.66	2.99	1.99	0.25
763.00	H	-30.29	-18.38	11.74	0	1.66	-7.59	0.17	0.25

The bottom channel-720.00 MHz

Freq. (MHz)	Antenna Polarity	Reading (dBuV)	SGO/P (dBm)	Ant. Gain (dB)	Dipole Gain (dBi)	Cable (dB)	Corrected Power		Limit (W)
							(dBm)	(mW)	
720.00	V	-28.86	-14.13	11.56	0	1.44	-4.07	0.39	0.25
720.00	H	-29.32	-16.23	11.56	0	1.44	-6.06	0.24	0.25

6. MODULATION CHARACTERISTICS

6.1 PROVISIONS APPLICABLE

a).According to CFR 47 section 2.1047(a), for Voice Modulation Communication Equipment, the frequency response of the audio modulation circuit over a range of 100 to 5000Hz shall be measured.

b). According to CFR 47 section 74.861(e)-3, any form of modulation may be used. A maximum deviation of ±75 KHz is permitted when frequency modulation is employed.

6.2 MEASUREMENT METHOD

6.2.1 Modulation Limit

1). Configure the EUT as shown in figure 1, adjust the audio input for 60% of rated system deviation at 1KHz using this level as a reference (0dB) and vary the input level from –20 to +20dB. Record the frequency deviation obtained as a function of the input level.

2). Repeat step 1 with input frequency changing to 300,1000,3000, and 14000Hz in sequence.

6.2.2 Audio Frequency Response

1). Configure the EUT as shown in figure 1.

2). Adjust the audio input for 20% of rated system deviation at 1 KHz using this level as a reference (0 dB).

3). Vary the Audio frequency from 100 Hz to 30 KHz and record the frequency deviation.

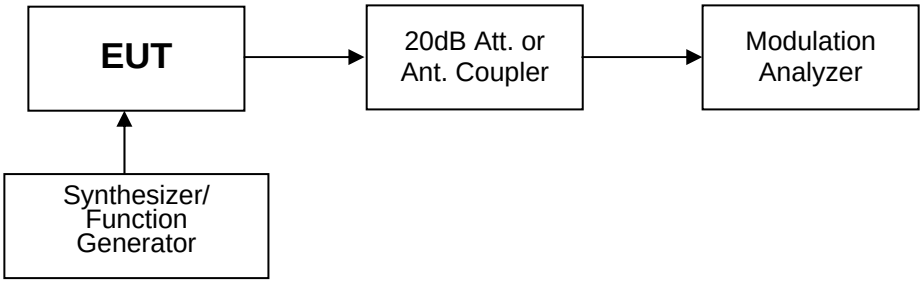

Figure 1: Modulation characteristic measurement configuration

6.3 MEASUREMENT INSTRUMENTS

EQUIPMENT TYPE	MFR	MODEL NUMBER	LAST CAL.	CAL DUE.
Audio Signal Generator	HP	3325A	06/08/2006	06/07/2007
Modulation Analyzer	HP	8920B	06/08/2006	06/07/2007
Attenuator	MINI CIRCUITS	MCL BW-S20W2	06/08/2006	06/07/2007

6.4 MEASUREMENT RESULT

a). Modulation Limit:

Top channel – 806.00 MHz

Modulation Level (dB)	Peak Freq. Deviation At 300 Hz (KHz)	Peak Freq. Deviation At 1000 Hz (KHz)	Peak Freq. Deviation At 3000 Hz (KHz)	Peak Freq. Deviation At 11000 Hz (KHz)
-20	7.72	7.94	8.05	10.17
-15	7.86	8.16	9.27	12.59
-10	10.89	10.28	12.59	15.96
-5	15.85	12.84	14.38	19.84
0	18.99	14.84	17.56	20.82
+5	21.33	18.96	19.87	24.10
+10	22.69	21.98	22.82	26.60
+15	22.79	23.76	26.90	31.90
+20	23.96	25.81	29.31	33.73

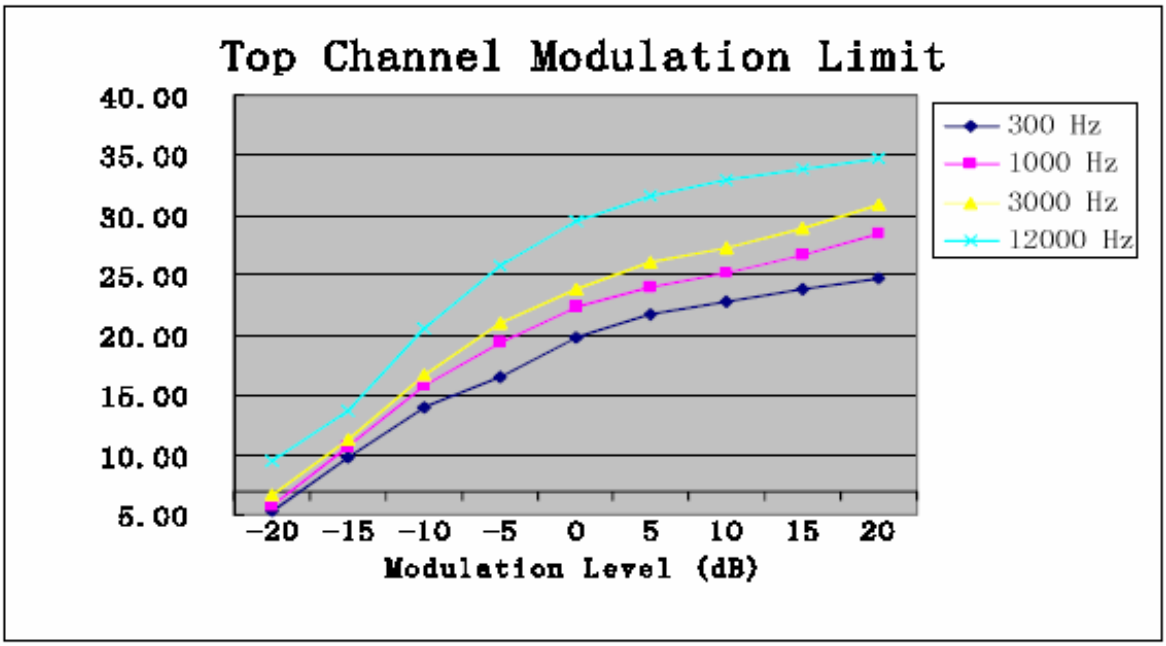

Middle channel – 763.00 MHz

Modulation Level (dB)	Peak Freq. Deviation At 300 Hz (KHz)	Peak Freq. Deviation At 1000 Hz (KHz)	Peak Freq. Deviation At 3000 Hz (KHz)	Peak Freq. Deviation At 11000 Hz (KHz)
-20	6.16	6.53	7.32	10.12
-15	11.04	11.76	12.40	14.64
-10	15.69	17.74	18.60	21.66
-5	18.56	20.65	22.21	27.01
0	21.87	23.79	24.81	31.05
+5	23.88	25.85	27.33	32.60
+10	25.14	26.81	29.02	33.55
+15	26.57	28.43	30.99	34.98
+20	27.91	30.64	33.17	36.63

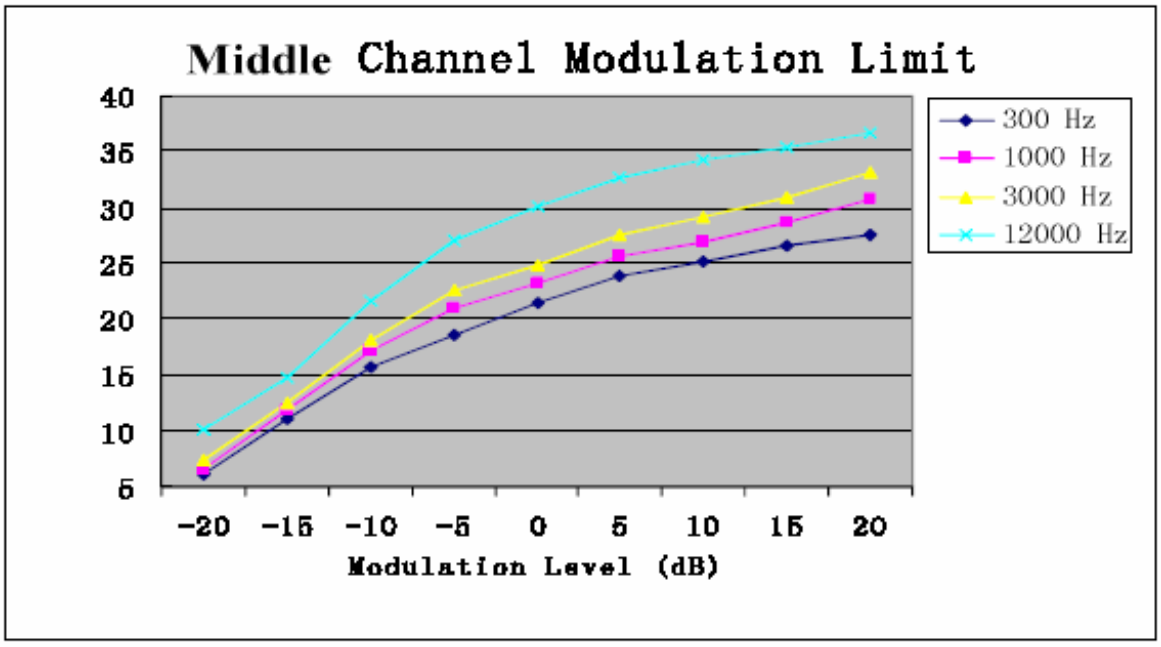

Bottom channel – 806.00 MHz

Modulation Level (dB)	Peak Freq. Deviation At 300 Hz (KHz)	Peak Freq. Deviation At 1000 Hz (KHz)	Peak Freq. Deviation At 3000 Hz (KHz)	Peak Freq. Deviation At 11000 Hz (KHz)
-20	6.90	6.37	7.21	10.00
-15	11.60	11.53	12.17	14.42
-10	14.04	16.70	17.66	21.24
-5	17.74	20.41	22.07	26.60
0	21.51	22.64	24.21	29.47
+5	22.94	24.86	26.84	32.02
+10	24.27	26.16	28.36	33.63
+15	25.88	27.87	30.15	34.74
+20	26.26	29.96	32.27	35.92

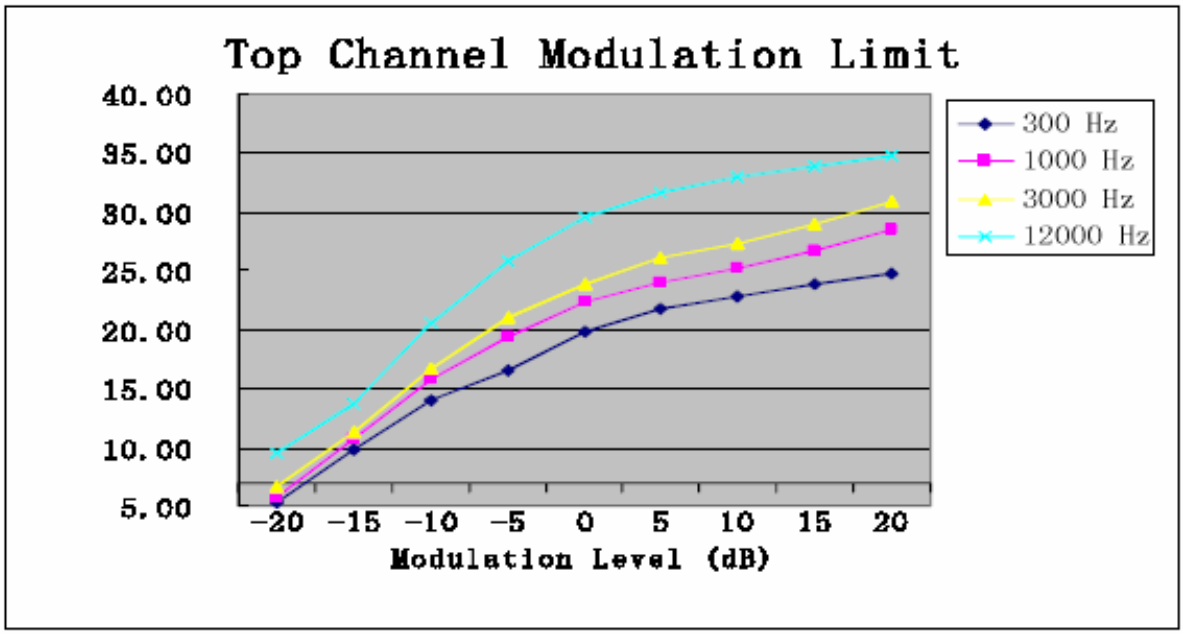

b). Audio Frequency Response:

Top channel – 806.00 MHz

Frequency (Hz)	Deviation (KHz)
100	6.89
200	7.67
300	8.08
400	8.50
500	8.82
600	9.42
700	9.59
800	9.66
900	9.93
1000	10.24
1200	10.51
1400	10.62
1600	10.76
1800	11.21
2000	11.23
2400	11.55
2800	11.84
3200	11.91
3600	12.20
4000	12.52
4500	12.81
5000	13.12
5500	13.22
6000	13.34
6500	13.39
7000	13.43
8000	13.73
9000	13.90
10000	13.95
12000	14.03
14000	13.71
16000	13.26
18000	12.24
20000	10.68
25000	9.42
30000	8.27

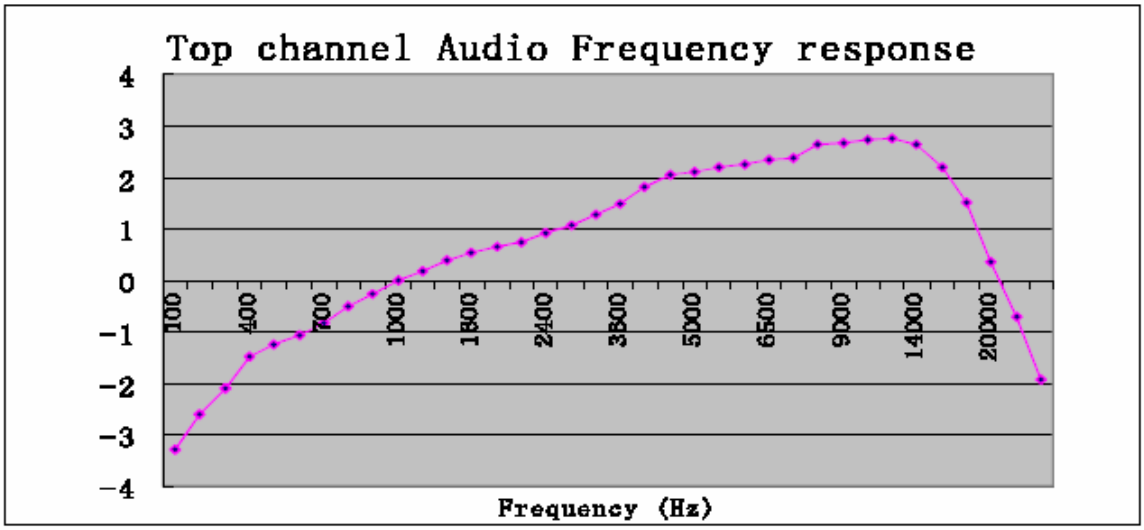
Top channel Audio Frequency response
4
3
2
1
0
-1
-2
-3
-4
100
400
700
1000
1600
2400
3600
5000
6500
9000
14000
20000
Frequency (Hz)

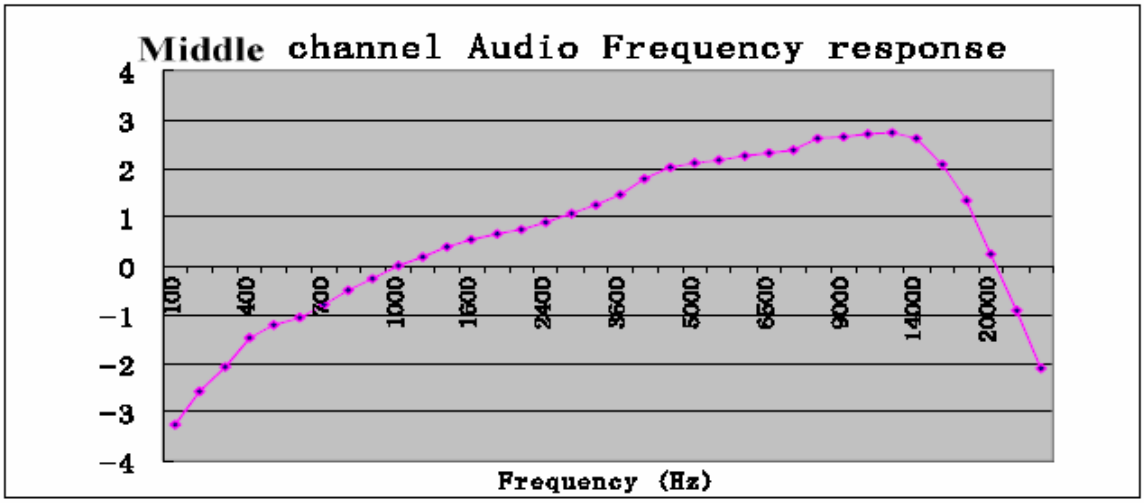
Middle channel Audio Frequency response
4
3
2
1
0
-1
-2
-3
-4
100
400
700
1000
1600
2400
3600
5000
6500
9000
14000
20000
Frequency (Hz)

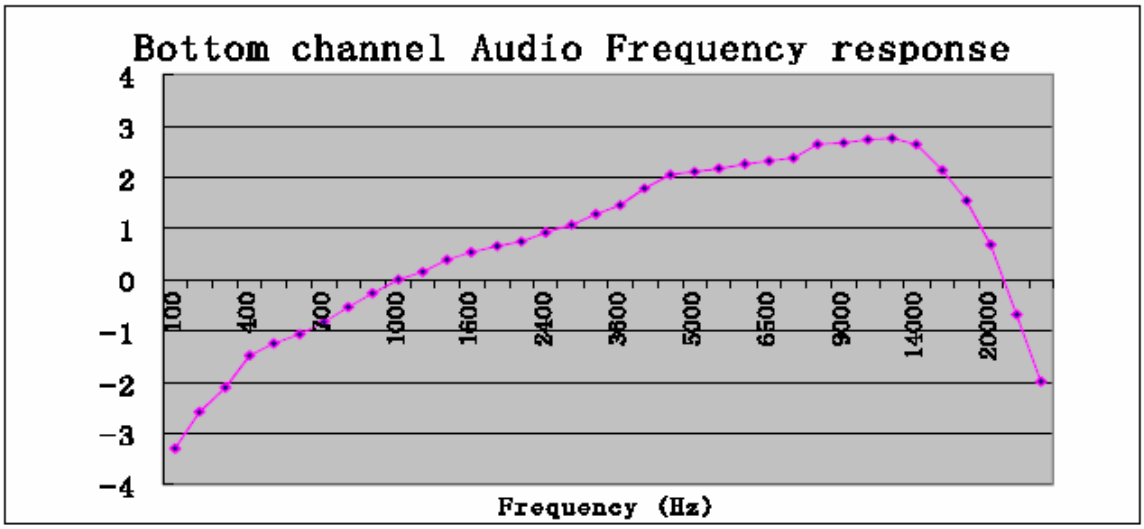
Bottom channel Audio Frequency response
4
3
2
1
0
-1
-2
-3
-4
100
400
700
1000
1600
2400
3600
5000
6500
9000
14000
20000
Frequency (Hz)

Middle channel –763.00 MHz

Frequency (Hz)	Deviation (KHz)
100	7.19
200	7.68
300	8.21
400	8.68
500	8.94
600	9.22
700	9.39
800	9.74
900	9.98
1000	10.38
1200	10.51
1400	10.88
1600	10.94
1800	11.16
2000	11.24
2400	11.43
2800	11.75
3200	11.91
3600	12.10
4000	12.67
4500	13.09
5000	13.13
5500	13.23
6000	13.36
6500	13.48
7000	13.63
8000	13.94
9000	13.99
10000	14.16
12000	14.13
14000	13.92
16000	13.19
18000	12.24
20000	10.66
25000	9.38
30000	8.19

Bottom channel – 720.00MHz

Frequency (Hz)	Deviation (KHz)
100	7.22
200	7.68
300	8.05
400	8.53
500	8.89
600	9.16
700	9.33
800	9.66
900	9.84
1000	10.35
1200	10.45
1400	10.78
1600	10.92
1800	11.14
2000	11.19
2400	11.28
2800	11.40
3200	11.84
3600	12.23
4000	12.69
4500	12.94
5000	13.06
5500	13.15
6000	13.18
6500	13.35
7000	13.56
8000	13.88
9000	13.94
10000	14.21
12000	14.07
14000	13.90
16000	13.12
18000	12.14
20000	11.17
25000	9.49
30000	8.25

7. FREQUENCY TOLERANCE

7.1 PROVISIONS APPLICABLE

a). According to FCC Part 2 Section 2.1055(a)(1), the frequency stability shall be measured with variation of ambient temperature from –30℃ to +50℃ centigrade.

b). According to FCC Part 2 Section 2.1055(d)(2), for hand carried battery powered equipment, the frequency stability shall be measured with reducing primary supply voltage to the battery operating end point, which is specified by the manufacture.

c). According to FCC Part 74 Section 74.861(e)-4, the frequency tolerance must be maintained within 0.005%.

7.2 MEASUREMENT PROCEDURE

7.2.1 Frequency stability versus environmental temperature

1. Setup the configuration per figure 1 for frequencies measurement inside an environment chamber, Install new battery in the EUT.
2. Turn on EUT and set SA center frequency to the EUT radiated frequency. Set SA Resolution Bandwidth to 1KHz and Video Resolution Bandwidth to 1KHz and Frequency Span to 50KHz.Record this frequency as reference frequency.
3. Set the temperature of chamber to 50℃. Allow sufficient time (approximately 30 min) for the temperature of the chamber to stabilize. While maintaining a constant temperature inside the chamber, turn the EUT on and measure the EUT operating frequency.
4. Repeat step 2 with a 10℃ decreased per stage until the lowest temperature -30℃ is measured, record all measured frequencies on each temperature step.

7.2.2 Frequency stability versus input voltage

1. Setup the configuration per figure 1 for frequencies measured at temperature if it is within 15 ℃ to 25℃. Otherwise, an environment chamber set for a temperature of 20℃ shall be used. Install new battery in the EUT.
2. Set SA center frequency to the EUT radiated frequency. Set SA Resolution Bandwidth to 1KHz and Video Resolution Bandwidth to 1KHz. Record this frequency as reference frequency.
3. For battery operated only device, supply the EUT primary voltage at the operating end point which is specified by manufacturer and record the frequency.

7.3 TEST SETUP BLOCK DIAGRAM (block diagram of configuration)

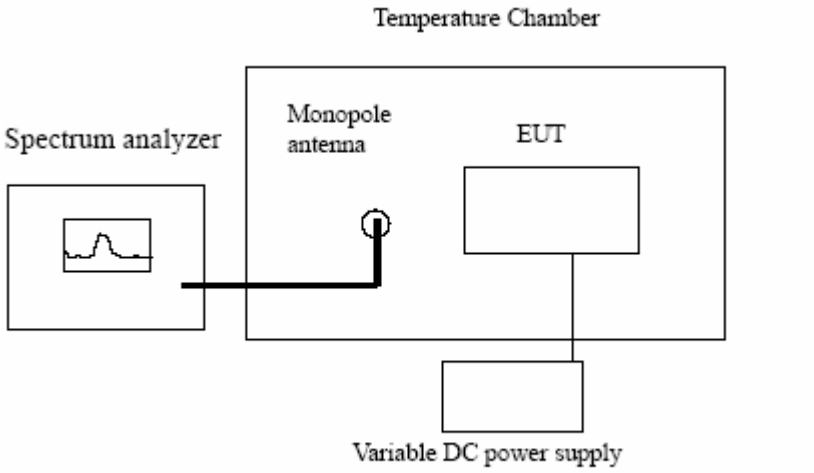

Figure 1

7.4 Test equipment used:

Equipment	Model No.	Serial No.	Cal. Due.
Advantest Spectrum Analyzer	R3132	120901472	06/06/2007
Shihin Temperature Chamber	BM50-CB	908	06/06/2007
DC Power Supply	WYK-605	N/A	06/06/2007
Huber + suhner low loss cable	N/A	N/A	06/06/2007
Monopole Antenna	N/A	N/A	N/A

7.5 TEST RESULT

a. Frequency stability versus input voltage (battery operation end point voltage is6.7V)

Wireless Microphone	Reference Frequency (MHz)	Frequency Measured at end point voltage	Frequency Error (%)	Limit (%)
Top channel	806.00	805.99812	-0.00023	0.005
Middle channel	763.00	762.99811	-0.00025	0.005
Bottom channel	720.00	719.99865	-0.00019	0.005

b. Frequency stability versus ambient temperature

Top channel-806.00 MHz

Reference Frequency: 212.1050 MHz			Limit: ±0.005%
Environment Temperature (℃)	Power Supply	Frequency deviation measured with time Elapse (30 minutes)	
		(MHz)	%
50	New Battery	806.00112	0.00014
40	New Battery	805.99939	-0.00008
30	New Battery	805.99854	-0.00018
20	New Battery	805.99834	-0.00021
10	New Battery	805.99804	-0.00024
0	New Battery	805.99782	-0.00027
-10	New Battery	805.99723	-0.00034
-20	New Battery	805.99691	-0.00038
-30	New Battery	805.99661	-0.00042

Middle channel-763.00 MHz

Reference Frequency: 195.8030 MHz			Limit: ±0.005%
Environment Temperature (℃)	Power Supply	Frequency deviation measured with time Elapse (30 minutes)	
		(MHz)	%
50	New Battery	763.00231	0.00030
40	New Battery	763.00124	0.00016
30	New Battery	763.00013	0.00002
20	New Battery	762.99846	-0.00020
10	New Battery	762.99967	-0.00004
0	New Battery	762.99941	-0.00008
-10	New Battery	762.99907	-0.00012
-20	New Battery	762.99864	-0.00018
-30	New Battery	762.99680	-0.00042

Bottom channel-720.00 MHz

Reference Frequency: 176.8050 MHz			**Limit: ±0.005%**
Environment Temperature (℃)	**Power Supply**	**Frequency deviation measured with time Elapse (30 minutes)**	
		(MHz)	**%**
50	New Battery	719.99905	-0.00013
40	New Battery	719.99804	-0.00027
30	New Battery	719.99736	-0.00037
20	New Battery	719.99858	-0.00020
10	New Battery	719.99698	-0.00042
0	New Battery	719.99670	-0.00046
-10	New Battery	719.99634	-0.00051
-20	New Battery	719.99599	-0.00056
-30	New Battery	719.99563	-0.00061

8. EMISSION BANDWIDTH

8.1 PROVISIONS APPLICABLE

According to FCC Part 74 Section 74.861(e)-5: The operation bandwidth shall not exceed 200KHz

8.2 MEASUREMENT PROCEDURE

1). The EUT was placed on a turn table which is 0.8m above ground plane.

2). Set EUT as normal operation

3). Set SPA Center Frequency = fundamental frequency , RBW,VBW= 1 KHz, Span =200 KHz.

4). Set SPA Max hold. Mark peak, -26dB.

8.3 TEST SETUP BLOCK DIAGRAM (Block Diagram of Configuration)

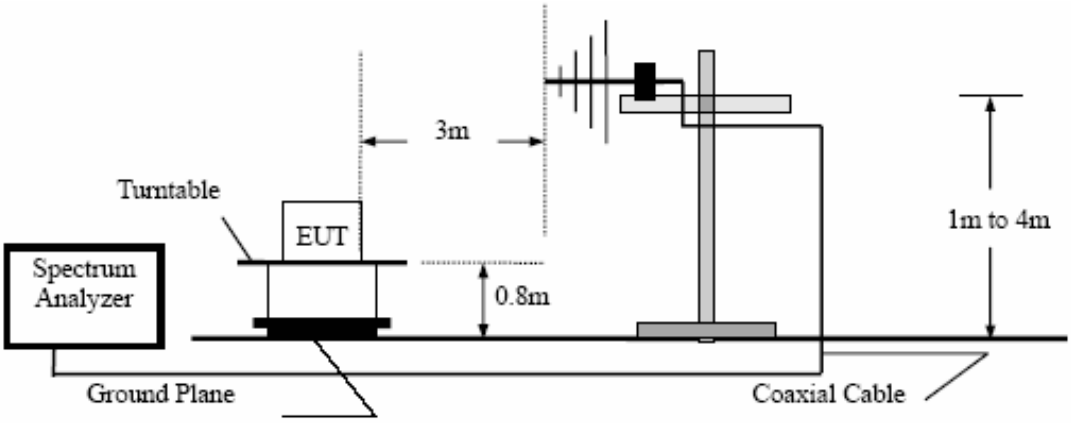

8.4 MEASUREMENT EQUIPMENT USED:

Open Area Test Site # 3					
EQUIPMENT TYPE	**MFR**	**MODEL NUMBER**	**SERIAL NUMBER**	**LASTCAL.**	**CAL DUE.**
Spectrum Analyzer	ADVANTEST	R3132	120901472	06/08/2006	06/07/2007
EMI Test Receiver	HP	8546A	3448A00232	06/08/2006	06/07/2007
Pre-Amplifier	HP	8447D	2944A07999	06/08/2006	06/07/2007
Bi-log Antenna	EMCO	3142	9910-1436	06/08/2006	06/07/2007

8.5 MEASUREMENT RESULT:

26dB bandwidth = 58.8 KHz
Refer to attached data chart.

Top channel - 806.0 MHz

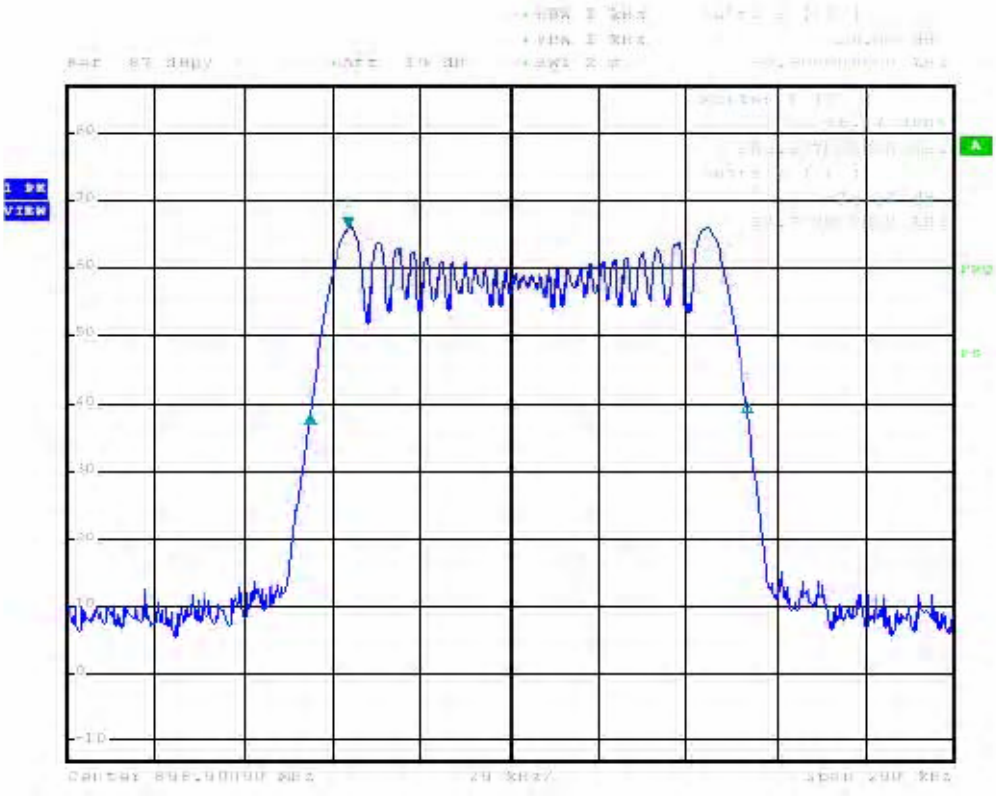

Middle channel – 763.0 MHz

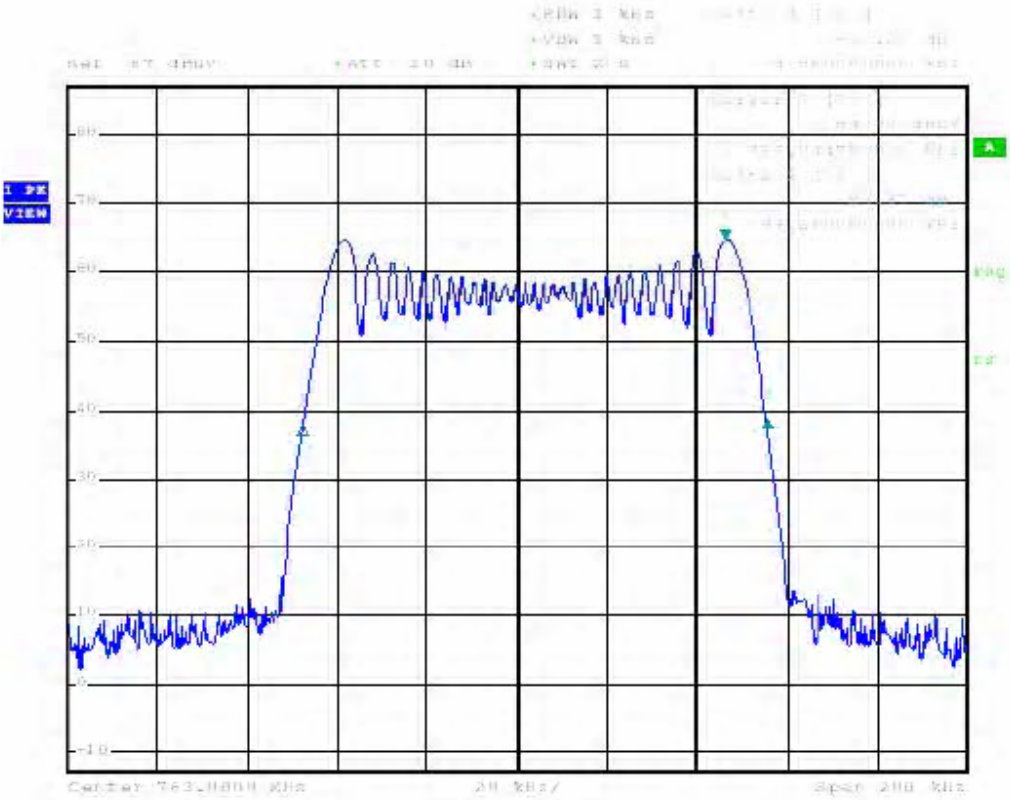

Bottom channel – 720.0 MHz

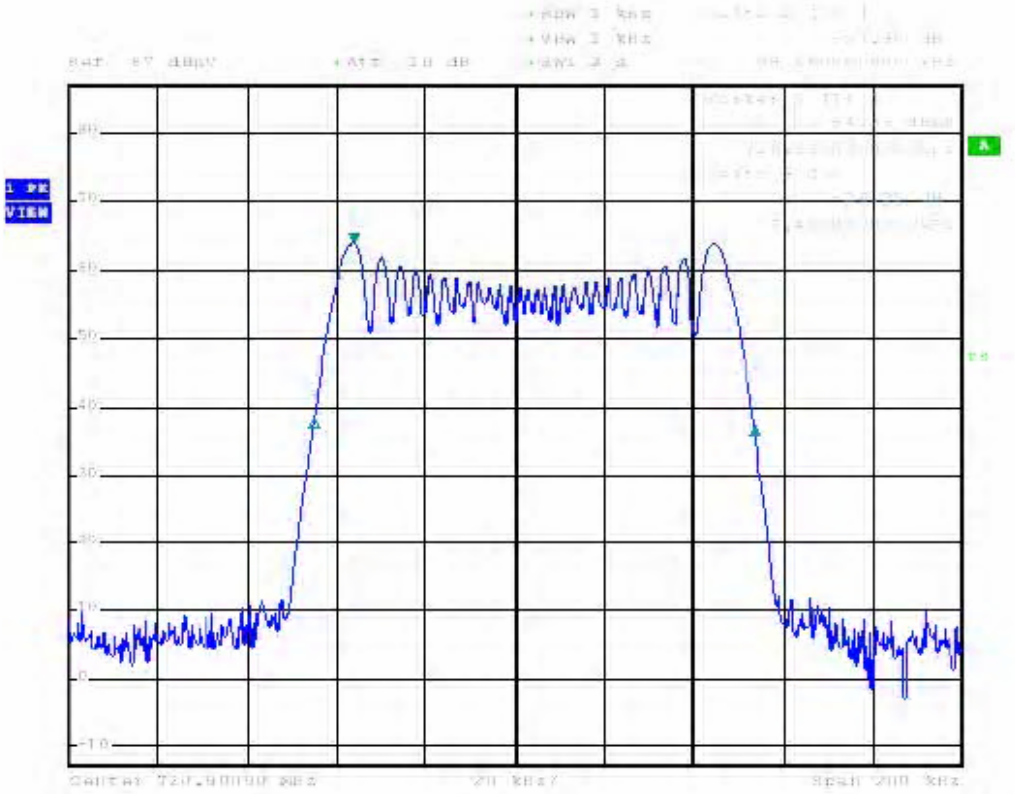

9. UNWANTED RADIATION

9.1 PROVISIONS APPLICABLE

According to Section 74.861(e)-6, The mean power of emissions shall be attenuated below the mean output power of the transmitter in accordance with the following schedule:

1). On any frequency removed from the operating frequency by more than 50 percent up to and including 100 percent of the authorized bandwidth: at least 25 dB;

2). On any frequency removed from the operating frequency by more than 100 percent up to and including 250 percent of the authorized bandwidth: at least 35 dB;

3). On any frequency removed form the operating frequency by more than 250 percent of the authorized bandwidth: at least 43 + 10 log10 (TP) dB

9.2 MEASUREMENT PROCEDURE

1). On a test site, the EUT shall be placed on a turntable, and in the position closest to the normal use as declared by the user.

2). The test antenna shall be oriented initially for vertical polarization located 3m from the EUT to correspond to the transmitter.

3). The output of the antenna shall be connected to the measuring receiver and either a peak or quasi-peak detector was used for the measurement as indicated on the report. The detector selection is based on how close the emission level was approaching the limit.

4). The transmitter shall be switched on; if possible, without the modulation and the measurement receiver shall be tuned to the frequency of the transmitter under test.

5). The test antenna shall be raised and lowered through the specified range of height until the measuring receiver detects a maximum signal level.

6). The transmitter shall than be rotated through 360°in the horizontal plane, until the maximum signal level is detected by the measuring receiver.

7). The test antenna shall be raised and lowered again through the specified range of height until the measuring receiver detects a maximum signal level.

8). The maximum signal level detected by the measuring receiver shall be noted.

9). The measurement shall be repeated with the test antenna set to horizontal polarization.

10). Replace the antenna with a proper Antenna (substitution antenna).

11). The substitution antenna shall be oriented for vertical polarization and, if necessary, the length of the substitution antenna shall be adjusted to correspond to the frequency of transmitting.

12). The substitution antenna shall be connected to a calibrated signal generator.

13). If necessary, the input attenuator setting of the measuring receiver shall be adjusted in order to increase the sensitivity of the measuring receiver.

14). The test antenna shall be raised and lowered through the specified range of the height to ensure that the maximum signal is received.

15). The input signal to substitution antenna shall be adjusted to the level that produces a level detected by the measuring receiver, that is equal to the level noted while the transmitter radiated power was measured, corrected for the change of input attenuation setting of the measuring receiver.

16). The input level to the substitution antenna shall be recorded as power level in dBm, corrected for any change of input attenuator setting of the measuring receiver.

17). The measurement shall be repeated with the test antenna and the substitution antenna oriented for horizontal polarization.

9.3 TEST SETUP BLOCK DIAGRAM (block diagram of configuration)

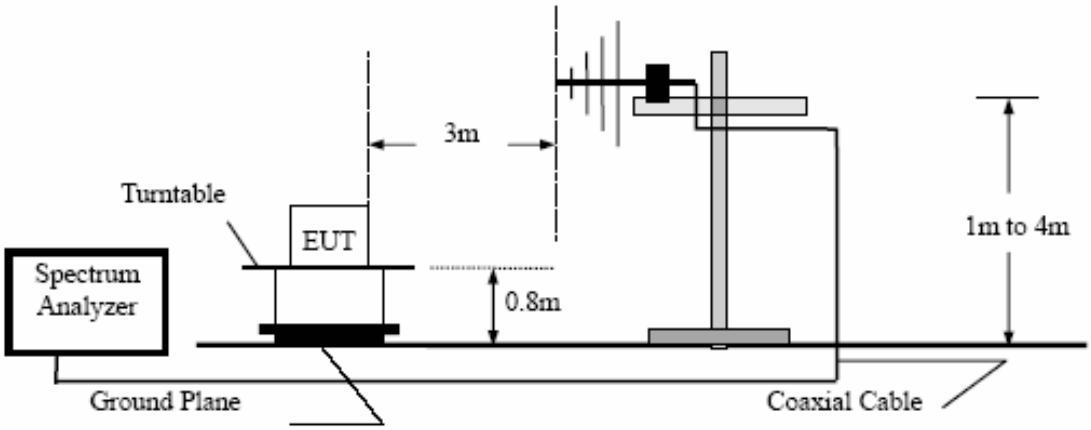

Radiation below 1GHz

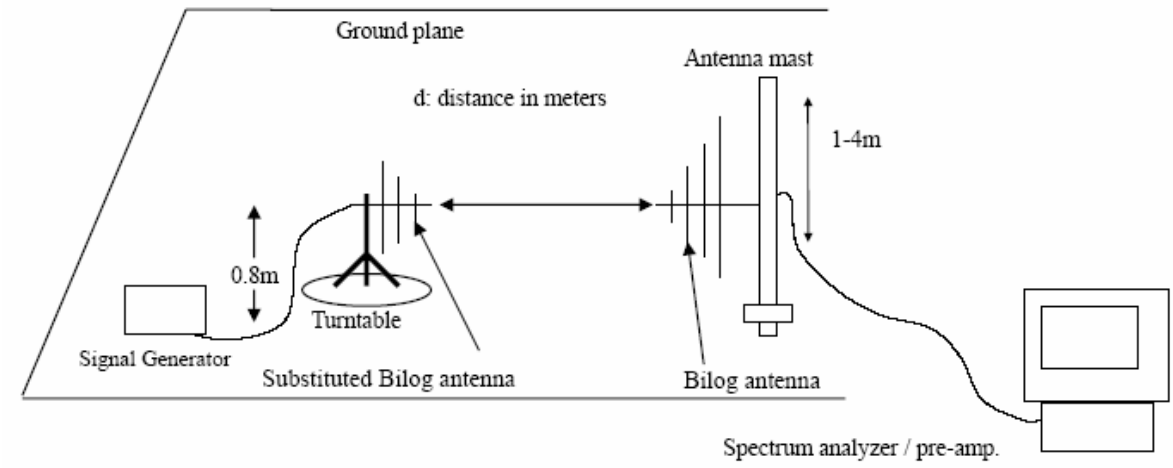

Radiation above 1GHz

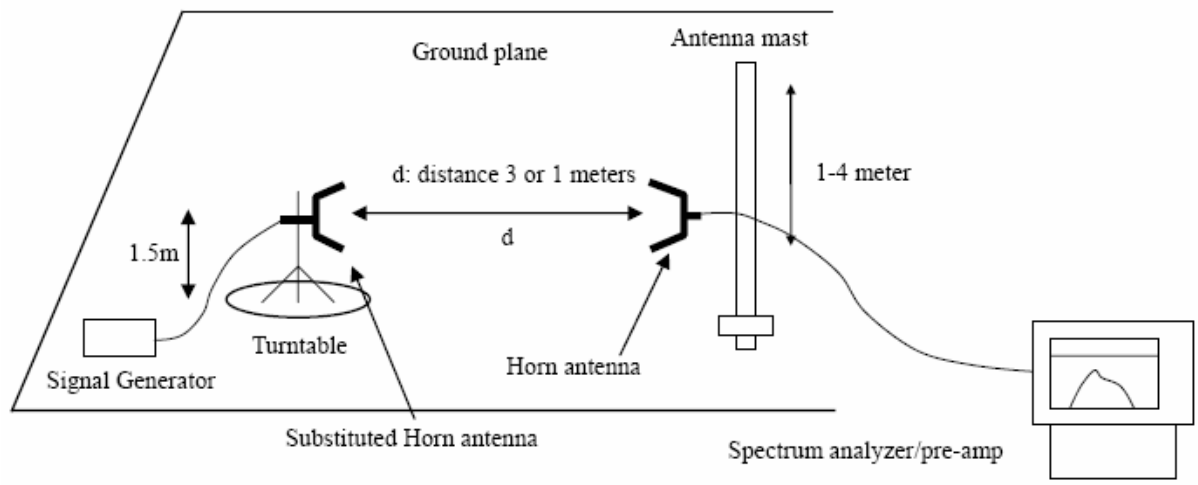

9.4 MEASUREMENT EQUIPMENT USED:

Open Area Test Site					
EQUIPMENT TYPE	**MFR**	**MODEL NO.**	**SERIAL NO.**	**LAST CAL.**	**CAL DUE.**
Spectrum Analyzer	ADVANTEST	R3132	N/A	06/08/2006	06/07/2007
EMI Test Receiver	HP	8546A	3448A00232	06/08/2006	06/07/2007
Pre-Amplifier HP	HP	8447D	2944A07999	06/08/2006	06/07/2007
Bi-Log Antenna	EMCO	3142	9910-1436	06/08/2006	06/07/2007
Bi-Log Antenna	SCHAFFNER	CBL6143	5082	06/08/2006	06/07/2007
CABLE	TIME MICROWAVE	LMR-400	N-TYPE04	06/08/2006	06/07/2007
Horn Antenna	ARA	DRG-118/A	104	06/08/2006	06/07/2007

9.5 MEASUREMENT RESULTS:

Calculation: Limit (dBm)= EL-43-10log10 (TP)

Notes: EL is the emission level of the Output Power expressed in dBm,, in this application, the EL is –9.6 dBm.

Limit (dBm)= -9.6-43-10log 10 (0.00011) = -13

Top channel & Middle channel & Bottom channel

Frequency (MHz)	Reading level (dBm)	Antenna Polarization	S.G. (dBm)	Cable loss (dB)	Ant.Gain (dB)	Emission level (dBm)	Limit (dBm)	Margin (dB)
*	*						-13	

Notes: * means the output power of all the spurious frequency is at least 20dB down to the limit.

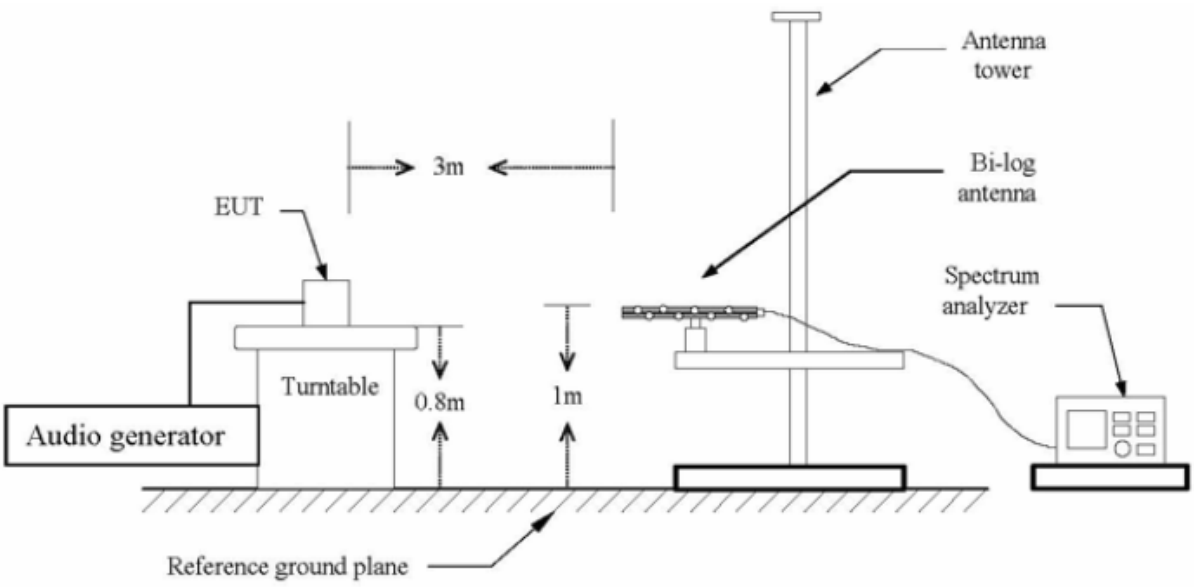

9.6 RADIATION EMISSION MASK:

Top channel - 806.0 MHz

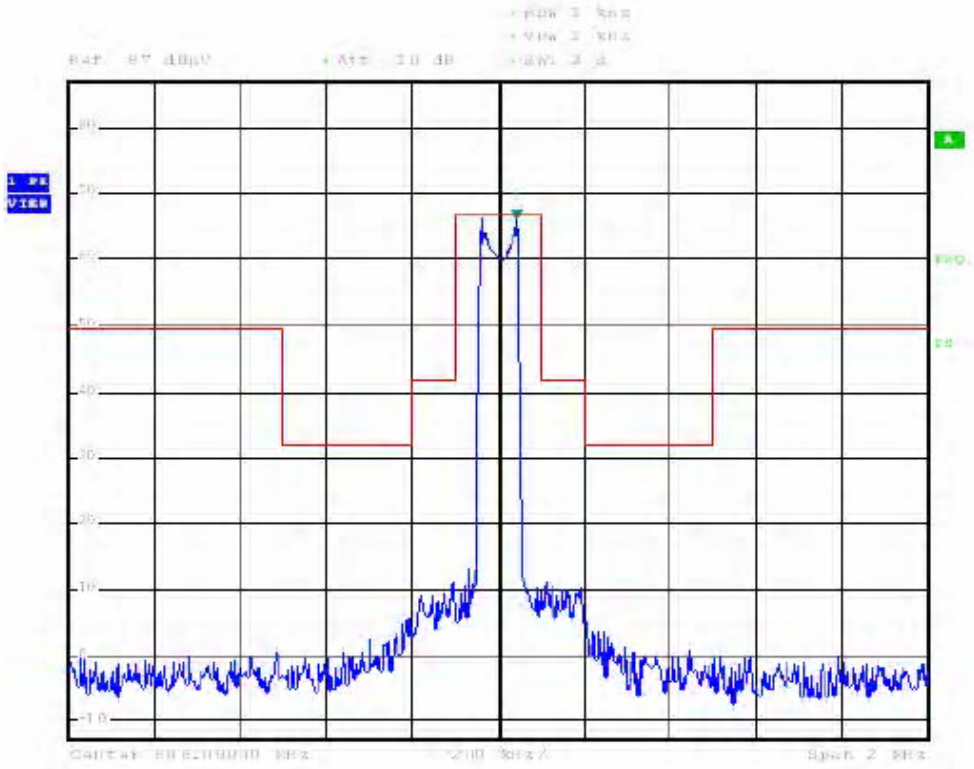

Middle channel – 763.0 MHz

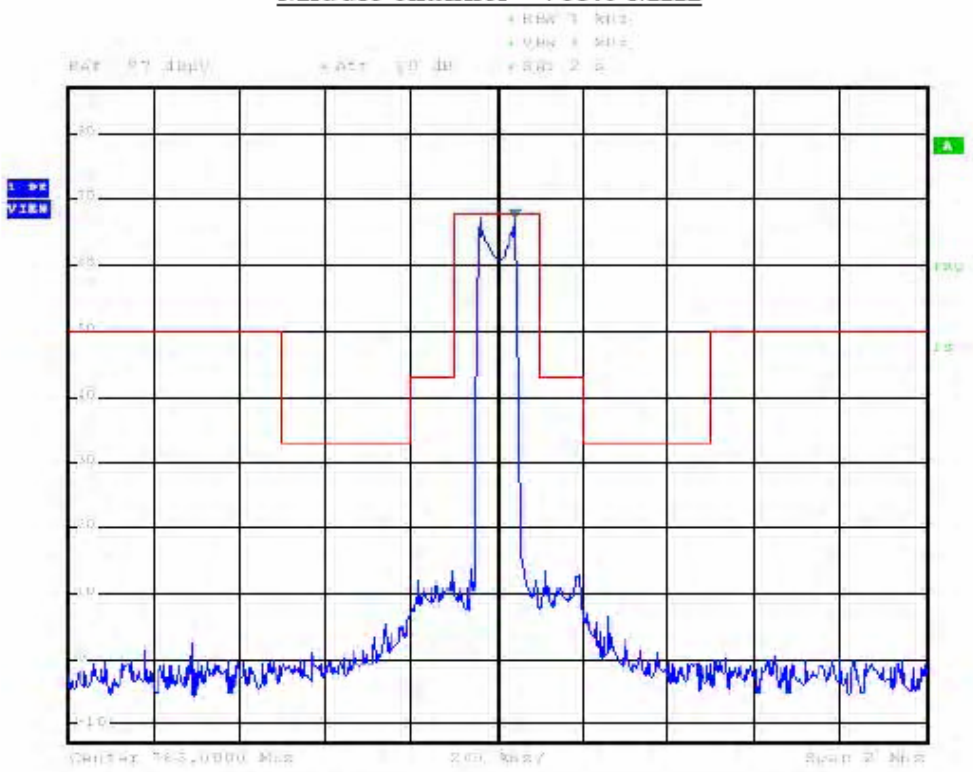

Bottom channel – 720.0 MHz

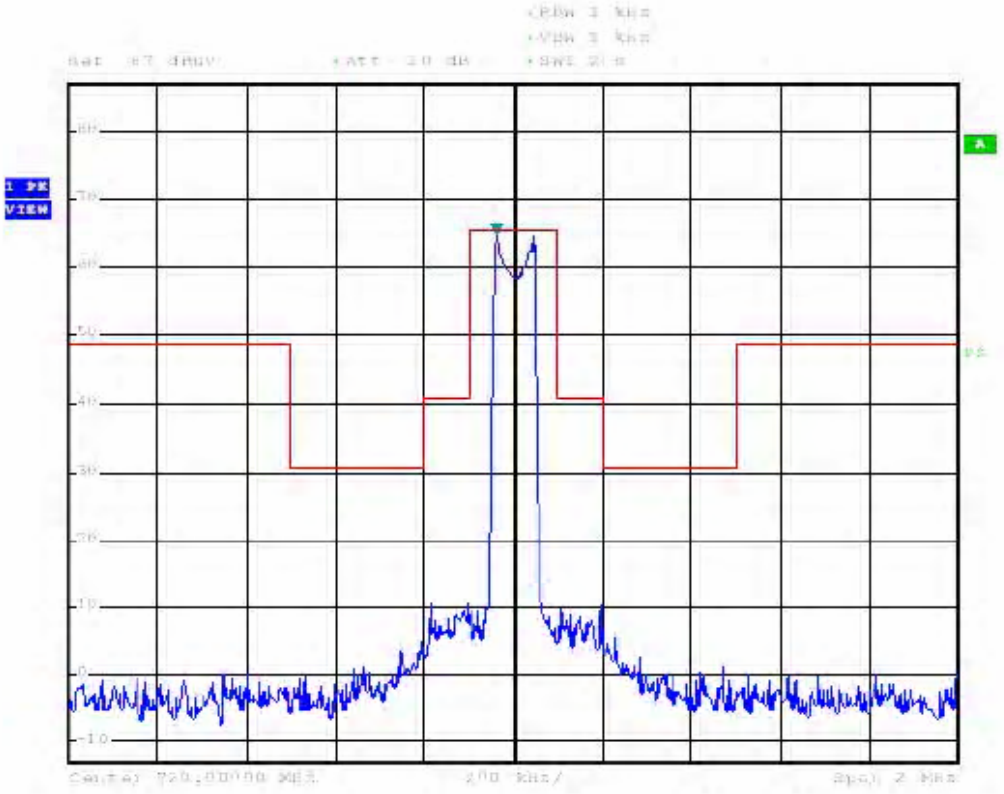

APPENDIX 1

PHOTOGRAPHS OF SET UP

Radiated Emission Setup Photo