pilot

WIRELESS CADENCE METER FOR THE LEMOND® REVMASTER STATIONARY CYCLE

Model : ZMS-1

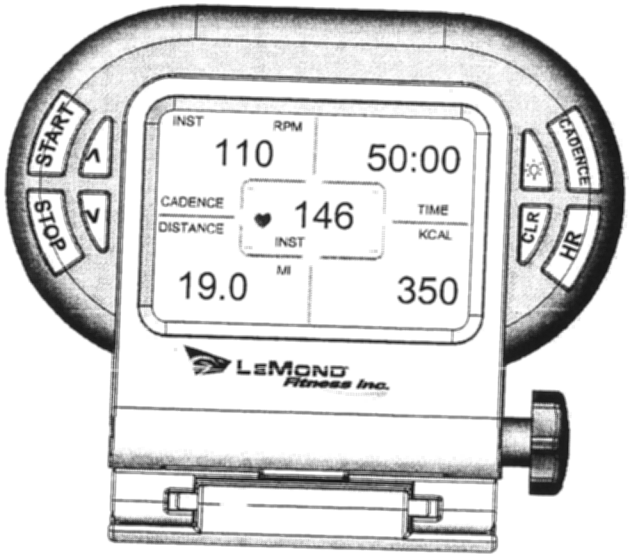

INSTRUCTION MANUAL

© 2004 LeMond Fitness
All rights reserved

© 2004 LeMond Fitness. LeMond, RevMaster, and Pilot are registered trademarks of LeMond Fitness in the United States and other countries.

IMPORTANT SAFETY INSTRUCTIONS

WARNING

BEFORE BEGINNING THIS OR ANY EXERCISE PROGRAM, CONSULT YOUR PHYSICIAN.

CERTAIN EXERCISES, PROGRAMS, OR TYPES OF EQUIPMENT MAY NOT BE APPROPRIATE FOR ALL INDIVIDUALS, ESPECIALLY IF YOU ARE ABOVE 40 YEARS OF AGE, AND/OR HAVE PRE-EXISTING HEALTH, AND/OR ORTHOPEDIC MEDICAL CONDITIONS. YOUR PHYSICIAN CAN HELP YOU DETERMINE WHAT ACTIVITIES OR PROGRAMS ARE MOST SUITABLE FOR YOU.

WARRANTY

This is to certify that the Pilot© wireless cadence meter is warranted by LeMond Fitness Inc. to be free of all defects in materials and workmanship. This warranty does not apply to any defect caused by negligence, misuse, accident, alteration, improper maintenance, or an "act of God." The Pilot cadence meter can only be used on the RevMaster indoor cycling bike. Any attempts to use this meter on any other equipment voids the warranty.

The Pilot carries a one year warranty on the meter and transmitter. Batteries are not warranted. Contact our Customer Service Department to report any problems. When calling, please be prepared to provide the customer service representative with the following information: Your name, the serial number of the inoperable unit, and the date(s) of purchase for the meter. If warranty replacement parts are shipped to you, you may be required to return the inoperable part.

LeMond Fitness Inc. neither makes, assumes nor authorizes any representative or other person to make or assume for us, any other warranty whatsoever, whether expressed or implied, in connection with the sale, service, or shipment of our products. We reserve the right to make changes and improvements in our products without incurring any obligation to similarly alter products previously purchased. In order to maintain your product warranty and to ensure the safe and efficient operation of your cadence meter, only authorized replacement parts can be used. This warranty is void if parts other than those provided by LeMond Fitness are used.

SPECIFICATIONS

Cadence Meter

Heart Rate Range:	30 to 240 bpm (beats per minute)
Heart Rate Accuracy:	± 4 bpm
Battery:	2 AA batteries
Battery Life:	6 months to 1 year, depending on usage

Transmitter

Emitted Frequency:	122 kHz
Battery:	3 AA batteries
Battery Life:	6 months to 1 year, depending on usage

CONTENTS

Description 7
Installation to the RevMaster 9
Console 9
Transmitter 10
Magnet 12
Display Window 13
Quick Start Program 15
Custom HR Training and Calorie Calculation 16
Key Functions 18
Cadence Training 20
Heart Rate Training 23
Start-Up Ride I - 30 Minutes 26
Start-Up Ride II - 40 Minutes 27
Troubleshooting 28
Appendix
FCC Compliance 30
Changing the Console and Transmitter
Codes and Dip Switch Codes 31
Dip Switch Codes 32
Console Codes 33

NOTE:

- Press any key to turn on the Pilot console.
- Never disassemble the console or transmitter as it can not be reassembled.
- The console is water resistant, not water proof. Do not deliberately place it in water.
- To clean the console, wipe it off with a clean rag sprayed with diluted household cleaner.

DESCRIPTION

The Pilot assembly consists of a console, a magnet, and a transmitter. A sensor in the transmitter counts the number of times a magnet mounted in the right crank passes the sensor. The transmitter will then send a coded RF (radio frequency) signal to the console containing the measured values.

The console has inboard receivers that pick up the signals from the transmitter and from telemetry (chest strap) heart rate signals. The heart rate is then shown in the display window. The console will track cadence (RPMs), speed (MPH/KPH), time, distance, and caloric expenditure.

The console and the transmitter use AA batteries as a source of power. Install the supplied batteries in the console and in the transmitter prior to using.

Console Battery Installation:

1. Remove the battery cover from the back of the console.
2. Insert 2 AA batteries into the battery compartment and reinstall the battery cover.

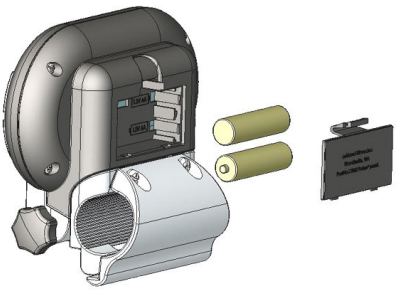

DESCRIPTION

Transmitter Battery Installation:

1. Remove the battery cover from the transmitter.
2. Install 3 AA batteries in the battery compartment and reinstall the battery cover.

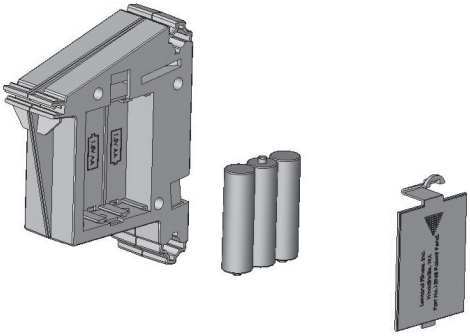

NOTE:

- Excessive use of the back light [ ]will drain the console batteries prematurely.
- Expected life of the console batteries is 6 months to 1 year.
- If the console battery power is low, then "**BATT LOW**" will be shown in the display window for 2 seconds after the display is turned on to inform you to change the console batteries.
- Expected life of the transmitter batteries is 6 months to 1 year.

INSTALLATION OF THE PILOT

THE CADENCE METER CAN ONLY BE INSTALLED ON A LEMOND REVMASTER BIKE.

To install the meter, the following tools are needed:

- Philips Screwdriver
- 4-mm Hex Key (supplied)

Console Installation:

1. Ensure that the batteries are installed in the console and the console turns on.
2. Spread the bottom of the console clamp apart and clamp it back together over the top center of the handle bar.

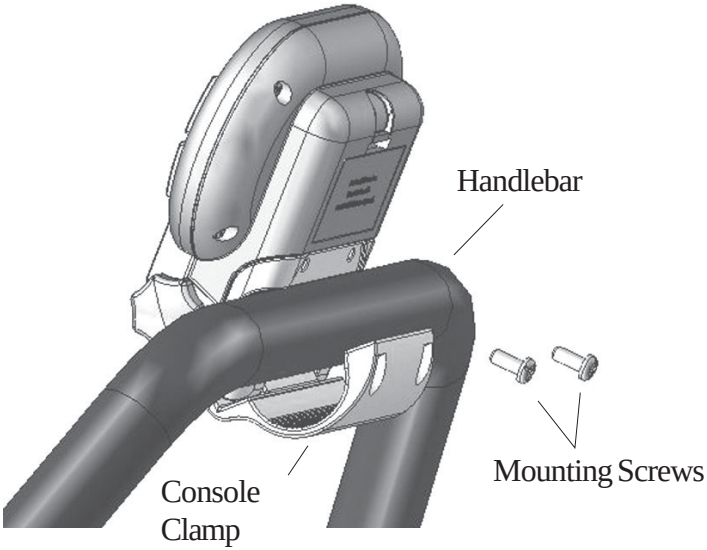

3. Insert a mounting screw into each hole and use a 4-mm hex key to tighten the screws.

Transmitter:

1. Ensure that the batteries are installed in the transmitter.
2. Use the philips screwdriver to remove the 2 philips head screws from the back cover on the left side of the bike.
3. Using the 4-mm hex key remove the 4 belt cover hex head screws from the right side of the bike.

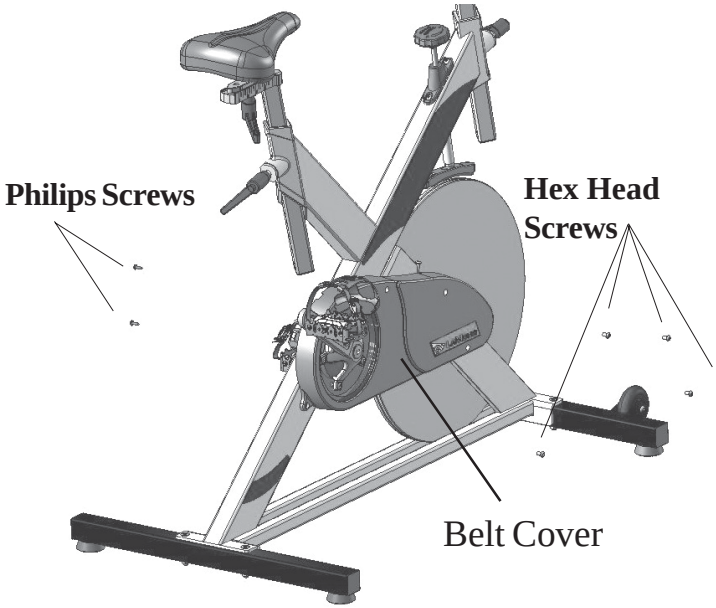

4. Remove the belt cover and place it inside up on the floor.
5. Peel the backing off the adhesive pad on the transmitter.

6. Position the transmitter over the inside rib and bosses (see picture below) of the belt cover and gently slide into place.
7. Press the transmitter into the belt cover to secure the adhesive backing to the inside belt cover.

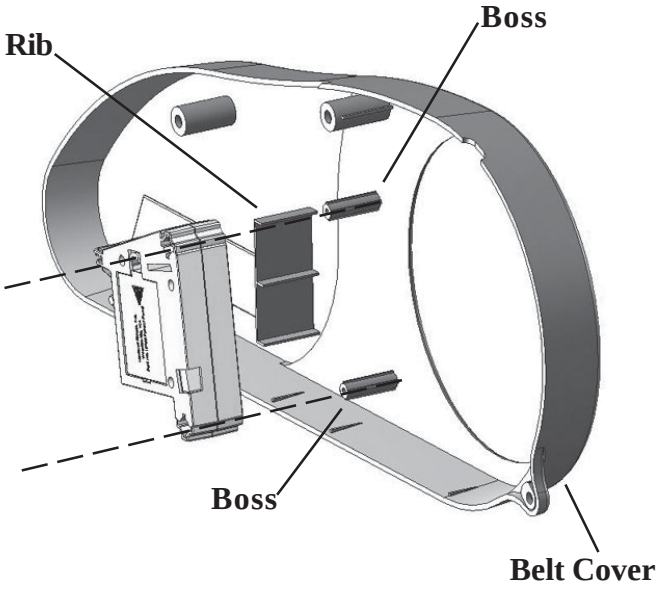

7. Reinstall the belt cover.

Magnet:

1. Rotate the right crank until it is at the 2:00 position.
2. Measure out 2.0” from the inside end of the crank and mark this location.
3. Firmy press the magnet into the groove on the inside crank arm at the measured location (see picture below).

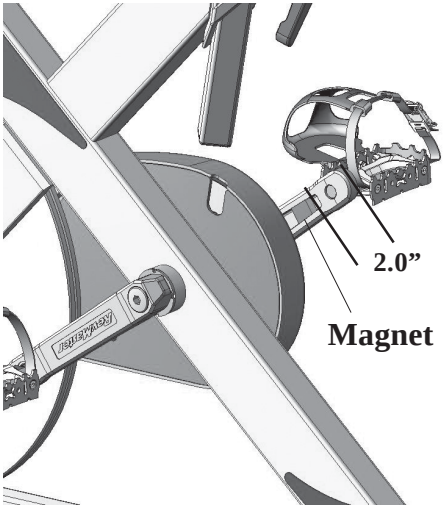

Checking the Installation:

1. Turn the console on by pressing START.
2. Rotate the cranks for 10 seconds and verify that the console is picking up the crank rotation and displaying RPM’s in the cadence section of the display window..
3. If you do not see RPMs in the display window, press the [CADENCE] key repeatedly until “INST” RPM is shown in the display window. If RPMs still do not show, refer to the troubleshooting section of this manual.

DISPLAY WINDOW

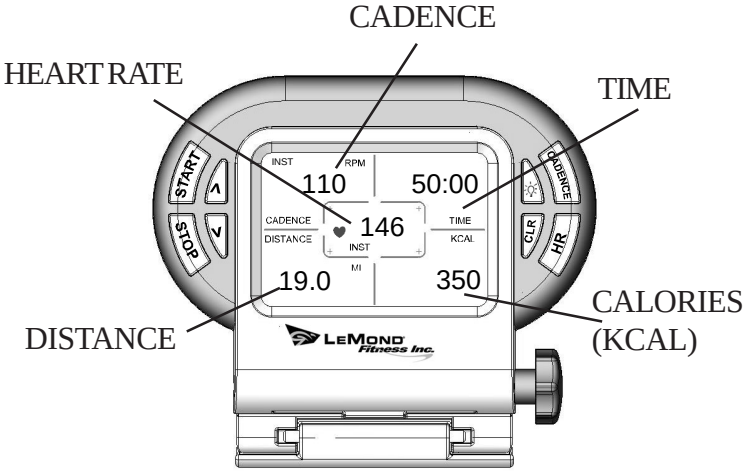

CADENCE

Cadence is the measurement of how fast the cranks are rotating in RPM's. The approximate speed of the bike can also be displayed (MPH/KPH) in this area.

TIME

Time is the length of time (min:sec) since you pressed the start button.

DISTANCE

Distance is the measurement of the approximate distance of the bike if the user was riding a bike with tires the same size of the flywheel.

KCAL

Kcal is the approximation of calories burned during your workout. The calories are estimated by measuring your instantaneous heart rate (HR) and factoring in your age, ambient HR, and weight.

HEART RATE

This is the measurement , by telemetry (chest strap), of your heart rate in beats per minute (BPM).

You must wear a chest strap during your workout in order to see your heart rate. The Pilot console will detect heart rate signals from most chest straps that emit an analog signal, or a digital Cardiosport® chest strap. An "A" (analog) or "D" (digital) will be displayed for a few seconds in the heart rate display section of the display window when a HR signal is initially received, to indicate the type of signal being received.

WARNING

IF AT ANY TIME DURING YOUR WORKOUT YOU FEEL CHEST PAIN, EXPERIENCE SEVERE MUSCULAR DISCOMFORT, FEEL FAINT, OR ARE SHORT OF BREATH, STOP EXERCISING IMMEDIATLELY. IF THE CONDITION PERSISTS, YOU SHOULD CONSULT YOUR MEDICAL DOCTOR IMMEDIATLEY

The Pilot also features heart zone training. After selecting your maximum and minium heart rate limits, the console will use flashing up and down arrows over the heart icon to indicate that you need to adjust your intensity either up or down to stay within your selected heart rate zone. See pg. 15 for more info.

QUICK START PROGRAM

Any time you want to bypass entering your personal data and start using the meter, simply press any key to turn on the console. After you press the [**START**] key, the timer will start counting and the console will start tracking usage information.

The Pilot will calculate calories burned based on the following default perimeters for Quick Start Workout:

Ambient Heart Rate (AHR):	70 bpm
Age:	30 Years old
Weight:	175 lbs.

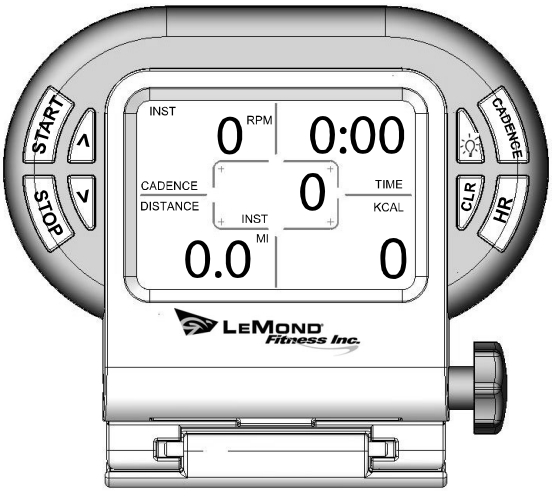

CUSTOM HEART RATE TRAINING AND CALORIE CALCULATIONS

1. Press and hold the [**HR**] key until the display window shows "∨ 240."
2. Use the [∨] key to change the upper limit of your target heart rate from 240 BPM to your desired beats per minute and press [HR] to select the number. Or, simply press [HR] to accept the default value of 240 BPM.

   Note: If your heart rate during your workout session is higher than the selected upper limit of your target heart rate range, there will be a flashing "**∨**" above the heart icon in the display window. This indicates that you should adjust your workout to bring your heart rate down.

3. The display window will now show "∧ 30."
4. Use the [∧] key to change the bottom limit of your target heart rate from 30 BPM to your desired beats per minute and press [HR] to select the number. Or, simply press [HR] to accept the default value of 30 BPM.

   Note: If your heart rate is lower than the selected bottom limit of your target heart rate range, there will be a flashing "**∧**" above the heart icon. This indicates that you should adjust your workout to bring your heart rate up.

5. The lower right portion of the display window will show 70 BPM as the default ambient heart rate (AHR).

CUSTOM HEART RATE TRAINING AND CALORIE CALCULATIONS (CONT.)

6. Use the [∧] or [∨] key to change the default AHR value to your AHR value.
7. Press the [**HR**] key to select your AHR value.
8. The default age of 30 years old will be displayed. Use the [∧] or [∨] key to change the default age to your age.
9. Press the [**HR**] key to select your age.
10. The default weight of 175 lbs. will be displayed. Use the [∧] or [∨] key to change the default weight to your weight.
11. Press the [**HR**] key to select your weight and return you to the main screen.
12. Press the [**START**] key to activate the timer and start tracking usage information.

KEY FUNCTIONS

[**START**]
The start key will start the timer and enable the cadence meter to begin calculating HR and Kcal values.

[**CLEAR**]

- A short press (< 3 sec) of the clear key will reset the time, distance and calorie measurements.
- Pressing and holding the clear key (> 3sec) will reset the AVG (average) and MAX (maximum) values for cadence and HR measurements. In addition, the calorie calculation values will be reset to their default values

[**STOP**]
The stop key will stop the calculation of the time, distance and calorie measurements without resetting the values of the measurements. Pressing the start key again will restart the console

[**CADENCE**]
The cadence key allows you to change the cadence section of the display window between INST (instantaneous) RPM, AVG (average) RPM, MAX (maximum) RPM, INST (instantaneous) MPH/KPH, AVG (average) MPH/KPH, and MAX (maximum) MPH/KPH.

[**∧**]
The up arrow allows you to increase the default max HR, min HR, ambient HR, age, and weight for target heart zone training and calorie calculations.

[∨]

The down arrow allows you to decrease the default max HR, min HR, ambient HR, age, and weight to select your values for target heart zone training and calorie calculations.

[**HR**]

- A short press of the heart rate key allows you to change the display of the HR section of the display window between INST (instantaneous) HR, AVG (average) HR and MAX (maximum) HR.

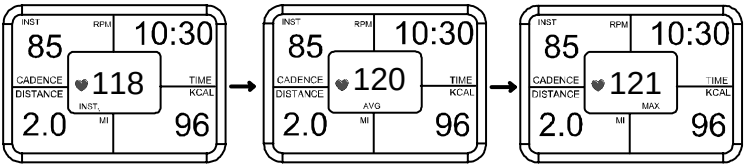

- A long press (> 3sec), places you in the HR data entry mode where you can use the [∧] and [∨] keys to select your upper target HR and lower target HR. You can also modify the ambient HR, age, and weight default values for more user specific calorie calculations.

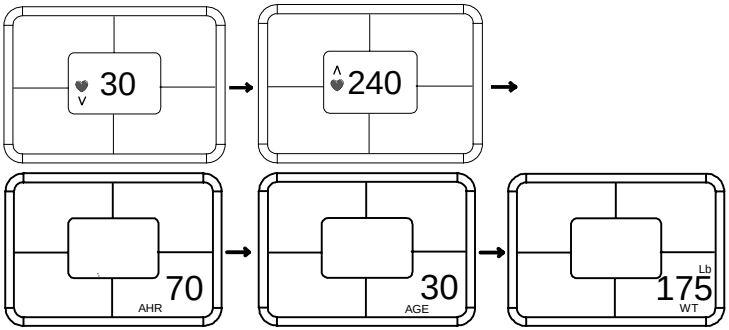

[ ]

Pressing the light key will back-light the display window for 5 seconds. If another key is pressed while the light is on, the back light will stay on for an additional 5 seconds. As long as keys are pressed with the back light on, the console light will stay on.

> **Note**: When the back light is on, all calculations are suspended during this time and heart rate and cadence is not detected.

CADENCE TRAINING

Definition of Cadence

How rapidly the cranks are rotated or the rhythm of the pedal stroke; often referred to as RPM (revolutions per minute).

Concepts using Cadence for training

You can choose the goal of your workout in relation to Resistance, Cadence, and Heart Rate . The intensity of your workout is affected by pedal speed change and the resistance applied.

Resistance Used	Cadence	Heart Rate	RPE	Feeling
Light	RPM 50-70	35%-50% MHR	1-2	Very easy
Light	RPM 70-90	50%-60% MHR	3-4	Easy
Light	RPM 90-100	60%-70% MHR	5	Steady; comfortable
Light	RPM 100-135	70%-85% MHR	6+	Challenging
Moderate	RPM 50-70	55%-65% MHR	4-5	Somewhat hard
Moderate	RPM 70-90	65%-75% MHR	5-6	Challenging, steady
Moderate	RPM 90-100	75%-85% MHR	6-7	Hard!
Moderate	RPM 100+	85%-100% MHR	7-10	Very hard; chasing
Heavy	RPM 50-60	70%-80% MHR	6-7	Hard; talking is hard
Heavy	RPM 60-70	80%-85% MHR	7-8	Very hard; pushing
Heavy	RPM 70-80	85%-90% MHR	8-9	Very Hard!!
Heavy	RPM 80+	90%-100% MHR	9-10	Maximal

Resistance Used	Speed Change	Effects on Heart Rate
Light	Lower RPM	HR remains relaxed
Light	Higher RPM	HR begins to rise
Moderate	Lower RPM	HR near to steady state
Moderate	Higher RPM	HR rises from steady state
Heavy	Lower RPM	HR rises - hard effort
Heavy	Higher RPM	HR rises very hard to maximal effort

Warm-Up

Warm up is of critical importance to the success of your cycling. The demands of your riding profile should be prepared in the warm-up to achieve maximal results. You must get your working muscles to a temperature of optimum performance where the circulatory system is delivering oxygen and nutrients efficiently to those muscles. Depending on the workout session goal, warm up can take from 15 minute to 20 minutes.

Time Recommendations for Specific Training Goals

The higher intensity the workout is going to be, the longer the warm-up should be with the appropriate heart rate zones (see Heart Rate Training section) and cadence being reached for a short period of time.

10 min.	Zone 1	RPM 70-80	Chat pace to start.
5 min.	Zone 2	RPM 80-90	Easy ride warm-up ends here (15 mins.)
3 min.	Zone 3	RPM 95-100	Endurance ride warm-up ends here (18 mins.)
2 min.	Zone 4	RPM 110-120	Interval training warm-up ends here (20 mins.)

Training Concepts

Based on *Heart Rate Monitor Book for Indoor and Outdoor Cyclists* by Sally Edwards and Sally Reed.

A. **Definition:** A physical, mental and emotional fitness system which maximizes your training, minimizes your time, and results in measurable cardiovascular health benefits.
B. **Heart Zone Training (HZT):** A system of setting goals, then organizing and executing around them by using a range of heartbeats.
C. **Principles:**
   1. HZT is an individualized and personalized program
   2. HZT makes it easier to manage now that you can measure and monitor
   3. HZT insures that multiple zones give you multiple benefits
   4. HZT is a wellness continuum from health fitness performance
   5. HZT is a complete system of cardiovascular training.

Heart Rate Terms

Maximum HR: the highest number of contractions of the heart muscle in one minute. You can determine your MHR by the following calculation:

220 - [10% body weight (lbs.) / 2] + 4 (Male) or 0 (Female) = MHR

Delta HR: the difference in heart rate with a change in body position.

Ambient HR: the number of beats per minute your heart contracts when you are awake but in a sedentary and stationary position.
Peak HR: highest heart rate during any one workout period.
Recovery HR: the number of beats per minute your heart drops after exercise, usually measured after two minutes of rest.
Average HR: the arithmetic average of your heart rate for a period of time.
Steady State HR: that heart rate which is held at the same number throughout the exercise period.
Threshold HR: that heart rate at the crossover point between aerobic and anaerobic metabolism.

Heart Zone Training

A. Determine your heart rate (in beats per minute) for the individual heart zones.

1. **Zone 1 – Healthy Heart Zone:**
   (50% - 60%) of your Max HR
2. **Zone 2 – Temperate Zone:**
   (60% - 70%) of your Max HR
3. **Zone 3 – Aerobic Zone:**
   (70% - 80%) of your Max HR
4. **Zone 4 – Threshold Zone:**
   (80% - 90%) of your Max HR
5. **Zone 5 – Redline zone:**
   (90% - 100%) of your Max HR

B. Determine your fitness goal:
   1. **Base -** individuals just starting their workout program need to build up to this level gradually.
   2. **Endurance**
   3. **Strength**
   4. **Speed**
   5. **Power**

C. Based on your fitness goal, determine the specific percentage of the workout time (not including warm up and cool down) needed in each of the following heart zones to achieve your fitness goal:

Base	
10% healthy heart	50-60% MHR
75% temperate	60-70% MHR
15% aerobic	70-80% MHR
Endurance	
5% healthy heart	50-60% MHR
20% temperate	60-70% MHR
70% aerobic	70-80% MHR
5% threshold	80-90% MHR
Strength	
15% temperate	60-70% MHR
75% aerobic	70-80% MHR
10% threshold	80-90% MHR
Speed	
80% aerobic	70-80% MHR
10% threshold	80-90% MHR
10% redline	90-100% MHR
Peak	
75% aerobic	70-80% MHR
15% threshold	80-90% MHR
10% redline	90-100% MHR

START-UP RIDE I - 30 MINUTES

Warm-up: *Start with realistic goals by pacing the workout intensity to how you feel. Drink water and ease up when over exerted.*
Key: ® = resistance

Duration	Profile	MHR	RPE
(5 minutes)	**Seated Flats**	**(55-65%)**	**2-3**
3 min. 80-95 RPM	Minimal ®		
2 min. 85-95 RPM	Light ®		
(5 minutes)	**XL's/ DL – light resistance**	**(60-70%)**	**3-4**
Focus on smooth pedal strokes and transitions when changing leg speed:			
2 min. /choose RPM	Accelerate leg speed 8 counts		
	Decelerate leg speed 8 counts		
2 min. /choose RPM	Accelerate 15 sec.		
	Decelerate 15 sec.		
30 sec. /choose RPM	Hold accelerated steady pace		
30 sec. /choose RPM	Decelerate pace, easy pedaling		

***Endurance Pacing*:** build heart rate up to steady state. Be specific to individual fitness level.

(15 minutes) *Practice with the resistance knob – add small resistance increases and then release. Notice changes in heart rate when exerting more intensity.*

Overall Profile: Start on flat road and establish starting resistance. Build leg speed up to 80 rpm working into the headwind. Describe pace line of riders who alternate turns riding at the front, pulling then resting by sitting in. Then, a short hill climb before the spin home.

Duration	Profile	MHR	RPE
1 min. choose RPM	Moderate resistance	**(70-85%)**	**4-6.5**
1 min. 70-80 RPM	Add ® try to maint. cadence		
1 min. 70-80 RPM	Add ® try to maint. cadence		
1 min. slow RPM	Add ®/option to stand up – slow down cadence		
1 min. 80-100 RPM	Release ® and spin easy	**(60-70%)**	**3-4**
[5 min.]	**[Repeat above sequence]**	**(70-85%)**	**4-6.5**
2 min. 80-100 RPM	**Seated Flat**	**(60-70%)**	**3-4**
3 min. 60-70 RPM	**Steep Hill Climb**	**(75-85%)**	**5.5-6.5**

Cool Down:

(2 minutes)	**Seated Flat**	**(55-65%)**	**2-3**
80-90 RPM	Comfortable spin with light ®		

Stretch: *Option on and off the bike.*
(3 minutes)
Stretch the muscles worked during the training. Add a few rotational torso movements to ease up any tension in the lower back or upper body.

START-UP RIDE II - 40 MINUTES

Duration	Profile	MHR	RPE
(15 minutes)	**Seated Flats**	**(55-65%)**	**2-3.5**
8 min. 80-110 RPM	**Warm-up** with minimal ® Gradually increase leg speed to 110 RPM		
2 min. 70-80 RPM	Add small increments of ®	**(65%-70%)**	**3.5-4.5**
2 min. 70-80 RPM	**Stand** and add some ®, but maintain the same cadence.	**(70-75%)**	**5**
3 min. 80-110 RPM	**Seated** recovery spin	**(55-65%)**	**2-3.5**
(14 minutes)	**Hill Climb**		
Focus on training strength and endurance			
1 min. 65-70 RPM	**Standing Climb** Add ® and slow cadence down	**(70-75%)**	**4-5**
1 min. 70-75 RPM	**Seated Climb** – same ® Slight increase of RPM	**(75-80%)**	**5+**
2 min. 70-75 RPM	**Standing Climb** Add slight ® same cadence	**(75-85%)**	**5.5-6**
2 min. steady	**Seated Climb** Keep ® and try to bring cadence back up if it slows down.	**(80-85%)**	**6 – 7**
2 min. steady	**Standing Climb** Maintain intensity and speed	**(80-85%)**	**6 – 7**
2 min. steady	**Seated Climb**/ Focus on breathing and efficient pedal strokes.	**(80-85%)**	**7**
1 min. 75-80 RPM	**Standing Climb**/speed up cadence, but not a major attack.	**(85+%)**	**7+**
1 min. 65-75 RPM	**Seated Climb** – ease up slightly on cadence if necessary.	**(85+%)**	**7+**
1 min. 70-80 RPM	**Stand Climb**	**(85+%)**	**7-8+**
Intensity is very strong; focus on breathing and maintaining cadence. Monitor the intensity and ease up if the heart rate feels too uncomfortable.			
1 min.	**Seated Climb** Finish strong without compromising technique.	**(85+%)**	**7-8+**
(6 minutes)	**Downhill and Recovery**		
Release to moderately light tension and speed up cadence:			
3 min. 95-110+ RPM	**Seated Downhill**	**(70-75%)**	**4-5**
3 min. 90-95 RPM	**Flat road spin**	**(65-70%)**	**3.5-4.5**
(5 minutes)	**Cool Down and Stretch**	**(50-60%)**	**1-2**
Release tension to light resistance and gradually decrease pedal speed.			
80-90 RPM	Easy pedaling, then stop to stretch		

Recover and lower heart rate. Stretch the muscles worked during the training. Add a few rotational torso movements to ease up any tension in the lower back or upper body.

TROUBLESHOOTING

No Display on Console

1. Press any key to bring the console out of sleep mode.
2. Ensure that the magnet is installed properly in the crank.
3. Ensure that the batteries are installed properly in the console and transmitter. If they are, install fresh batteries.
3. Verify that the console dip switch code matches the transmitter dip switch code (see Appendix).
4. Call our Customer Service department at 425-482-6773 for assistance.

No Heart Rate signal displayed

1. Ensure that your chest strap is worn correctly, and that there is moisture under the electrodes of the chest strap.
2. Relocate the RevMaster bike away from any equipment that could potentially interrupt the radio frequency signal, such as a DVD player or television, etc.
3. Enure that there is at least 36 inches between bikes in a group exercise class setting.
4. Call our Customer Service department at 425-482-6773 for assistance.

RPM or HR does not change

1. Press [CADENCE] repeatedly to toggle between instantaneous (INS), average (AVG), and maximum (MAX) values.
2. Press [HR] repeatedly to toggle between instantaneous (INS), average (AVG), and maximum (MAX) values.

Cadence number jumps high or low

1. Separate bikes that may be set to the same console code and are cross-talking, or change the console and transmitter codes on the bike (see Appendix).
2. Relocate the bike to a different part of the room, away from any RF interfernce areas.

CAUTION

EXTERNAL INTERFERENCE MAY BE CAUSED BY NEARBY TELEVISIONS, STEREO EQUIPMENT, SPEAKERS, ELECTRICAL WIRE CABLING, ETC. IF YOU EXPERIENCE DISTURBANCES IN THE CONSOLE DISPLAY TRY MOVING YOUR BIKE(S) AWAY FROM POTENTIAL RF INTERFERENCE AREAS.

3. Call our Customer Service department at 425-482-6773 for assistance.

Heart Rate signal gets interrupted or drops out

1. Ensure that there is a minimum distance of 36 inches between bikes.
2. Verify that your chest strap is secure and that the electrodes are making contact with your chest at all times.
3. Call our Customer Service department at 425-482-6773 for assistance.

APPENDIX

Notice of FCC Compliance

This equipment has been tested and found to comply with the limits for a Class C Low Power Communication Device Transmitter, pursuant to Part 15 of the FCC rules. Operation is subject to the following conditions: (1) This device may not cause harmful interference, and (2) this device must accept any interference received, including interference that may cause undesired operation.

There is no guarantee that interference will not occur in a particular installation. If this equipment experiences interference from a radio, television, or other RF signal, the user is encouraged to try and correct the interference by increasing the separation between the equipment and the apparatus emitting the interfering RF signal.

WARNING

CHANGES OR MODIFICATIONS TO EQUIPMENT NOT EXPRESSLY APPROVED BY LEMOND® FITNESS COULD VOID THE USER'S AUTHORITY TO OPERATE THIS EQUIPMENT.

APPENDIX

Changing the Console and Transmitter Codes

The console and the transmitter have dip switches that allow you to change the transmission code back and for the between a total of 16 different number codes (00-15) to help reduce cross talking between bikes in a class environment. Cross talking is when one bike picks up the RF signal from another bike, and interferes with the displayed numbers on the console.

- As long as the transmitter and console “dip” switches are set to the same number code, the two will communicate.

- To change the number codes, simply flip the dip switches on each component to the same number code.

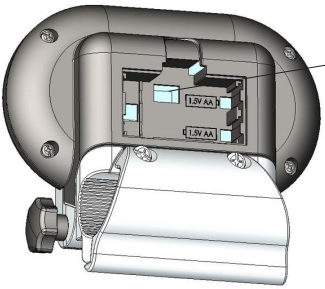

The console dip switches are located in the battery compartment

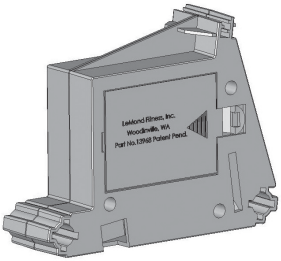

The transmitter dip switches are located below the battery compartment

APPENDIX

Dip Switch Codes

Match the code on the console to the code on the transmitter by flipping the dip switches on each unit to the corresponding up/ down sequences for the desired code as listed below.

Code Number (00-15)	Dip Switch Number 1	2	3	4
00	off	off	off	off
01	on	off	off	off
02	off	on	off	off
03	on	on	off	off
04	off	off	on	off
05	on	off	on	off
06	off	on	on	off
07	on	on	on	off
08	off	off	off	on
09	on	off	off	on
10	off	on	off	on
11	on	on	off	on
12	off	off	on	on
13	on	off	on	on
14	off	on	on	on
15	on	on	on	on

Note:

- The “on” position for the console dip switches is up toward the top of the console.

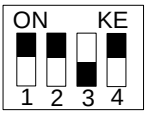

Console Dip Switches set to Code 11

- The “on” position for the transmitter dip switches is down toward the battery cover.

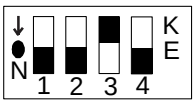

Transmitter Dip Switches set to Code 11

APPENDIX

Console Codes

[**CADENCE**] + [**HR**]
Pressing both these keys switches from English units - Miles (Mi), Miles per hour (MPH), and pounds (Lbs); to Metric units - Kilometers (Km), kilometers per hour (KPH), and kilograms (Kg).

[**CADENCE**] + [∧]
Pressing both these keys displays the console code.

> Note: the console will not display the transmitter code, you must remove the belt cover and visually inspect the transmitter to see what code it is set at.

[**CADENCE**] + [∨]
Pressing both these keys displays the chest strap HR code.

[**STOP**] + [∧] + [**CADENCE**]
Pressing all three keys at once will light up the entire display window. Use this code to verify that the Liquid Crystal Display (LCD) screen is working properly.

Corporate Headquarters
17280 Woodinville-Redmond Rd
Building B, Suite 888
Woodinville, WA 98072

Telephone: (425) 482-6773
Fax: (425) 482-6724
www.LeMondfitness.com

PN: 300204

© 2004 LeMond Fitness. LeMond, RevMaster, and Pilot are registered trademarks of LeMond Fitness in the United States and other countries.