Section A-A
2:1

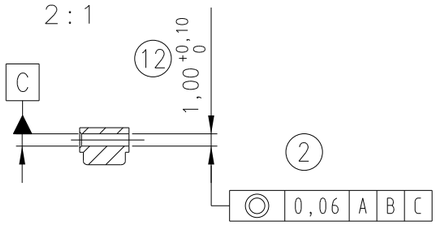

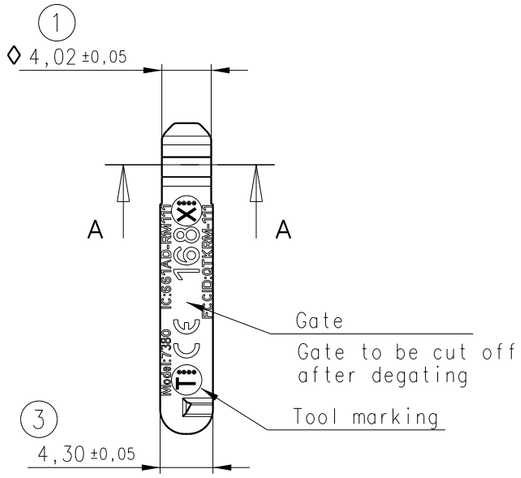

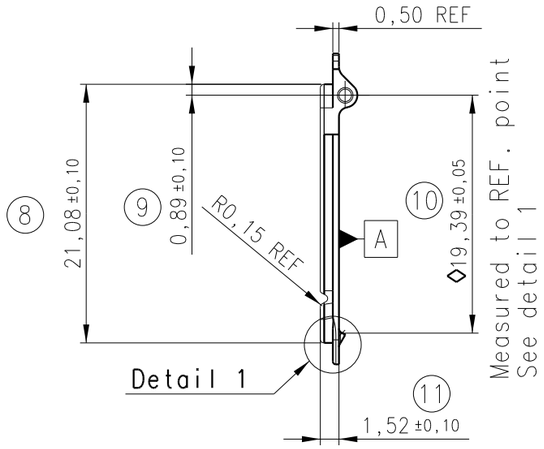

Surface Quality

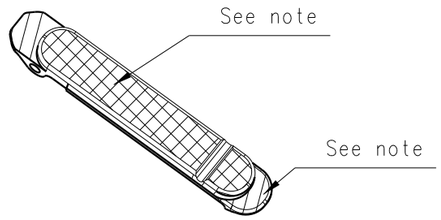

Marking:

Tool marking - must be changeable / replaceable (eg. placed on ejectorpin)

T = Tool number
• = Cavity number
• = 1
•• = 2
••• = 3
etc.

X = Tool version :
V = Under development
A = Mass approved
• = 3D Revision

Scale 1:1

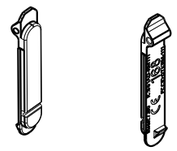

Detail 1
10:1

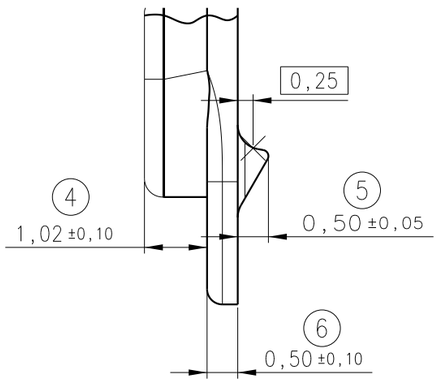

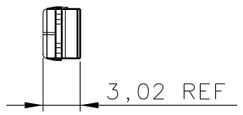

Notes:
1. Surface quality:
   Surfaces marked ( ) Polished according to DMY00006 MOSS 800/5 CLASS I
   Surfaces marked ( ) Polished according to DMY00006 MOSS 800/5 CLASS I
4. For complete documentation, this drawing must be accompanied by a 3D CAD-file with Part vers. number as stated in the title block.
5. Measurement Planes for the part are defined by the Datum Reference Control Frame: A B C
6. The parts centerline is defined by Datum Planes: B
7. Dimensions in this drawing are numbered by the numbers: 1 to 14
   Dimensions added:
   Dimensions removed: 7, 13, 14
8. Only dimensions with a dimension number is to be measured.
10. More detailed quality information in Visual Quality Document 040-015497-0.1.
11. Colours and Nokia Corporation Codes and PVD coating:
    See 040-017042 Paris Status list
13. Changes since last approved version:
    - FCC ID: QTKRM-III/IC: 661AD-RM111 Added to Item Name.

Material MIM PVD						Original Designer C.Svejgaard	
NOKIA	Sheet 1 of 1	Original Scale 2:1	0.4	1	Inissen 240505		
		Original Size A3	0.5	1	Inissen 090605		
Item Classification Component	1st Angle	Nokia Corp. Code See Notes	1.0	1	Inissen 160605	--------	AMK 160605
			2.0	2	VHarreby/200705	35356	AMK/200705
Item Name SIM Door Base FCC ID:QTKRM-III/IC: 661AD-RM111		Document Number 040-013886	Doc. Vers. 2.1	Part Vers. 2	Name / Date Pibsen 310805	Change Ref. -----	Approved / Date --- ------

Copyright © Nokia Corporation. All rights reserved.
THIS DRAWING IS PROTECTED BY COPYRIGHT AS AN UNPUBLISHED WORK.
UNAUTHORIZED REPRODUCTION OF THIS DRAWING IS NOT PERMITTED.
THIS DRAWING CONTAINS PROPRIETARY AND CONFIDENTIAL INFORMATION.
This document is property of Nokia Corporation.

All dimensions are in millimeters.

FUNCTIONAL CHARACTERISTICS KEY

◊ Process Capability Studies Required. (Total 2 pcs)

◆ Ongoing Statistical Process Control Required. (Total 0 pcs)

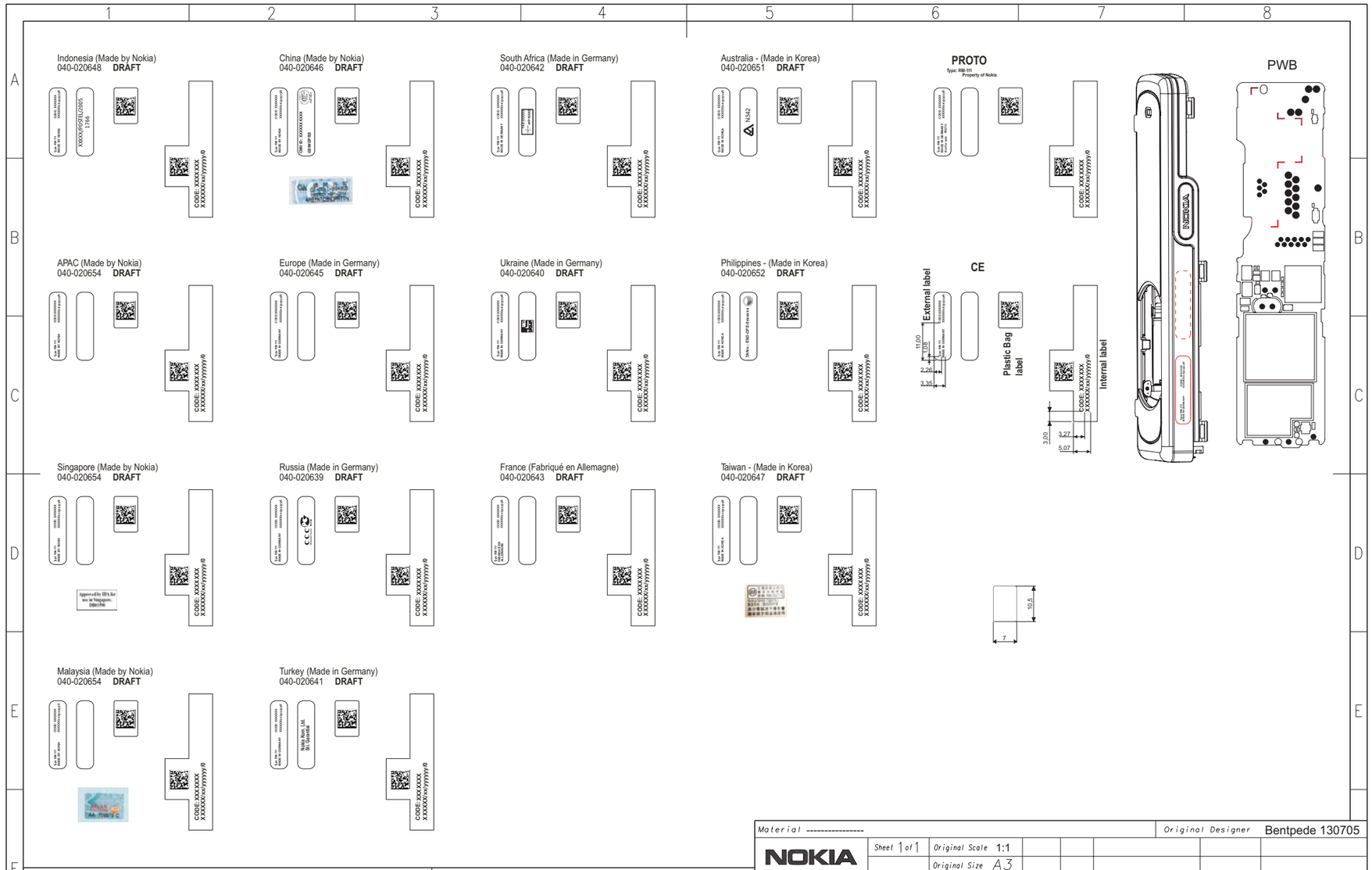
Indonesia (Made by Nokia)
040-020648 DRAFT
China (Made by Nokia)
040-020646 DRAFT
South Africa (Made in Germany)
040-020642 DRAFT
Australia - (Made in Korea)
040-020651 DRAFT
PROTO
Type: RM-111
Property of Nokia
PWB
APAC (Made by Nokia)
040-020654 DRAFT
Europe (Made in Germany)
040-020645 DRAFT
Ukraine (Made in Germany)
040-020640 DRAFT
Philippines - (Made in Korea)
040-020652 DRAFT
CE
External label
Plastic Bag label
Internal label
Singapore (Made by Nokia)
040-020654 DRAFT
Russia (Made in Germany)
040-020639 DRAFT
France (Fabriqué en Allemagne)
040-020643 DRAFT
Taiwan - (Made in Korea)
040-020647 DRAFT
Malaysia (Made by Nokia)
040-020654 DRAFT
Turkey (Made in Germany)
040-020641 DRAFT
CODE: XXXXXXX
XXXXXXXXXXXXXXXX
CODE: XXXXXXX
XXXXXXXXXXXXXXXX
CODE: XXXXXXX
XXXXXXXXXXXXXXXX