**INSTITUTO DE PESQUISAS ELDORADO**
**Departamento de Serviços Tecnológicos**
Laboratório de Compatibilidade Eletromagnética
☎ +(55) 19 – 3757-3137 Fax: +(55) 19 – 3757-3131
Rod. SP-340, Km 118,5
Condomínio Pólis - Prédio 11
CEP: 13086-902 Campinas - SP Brasil

# *FCC TEST REPORT*

*for*

# *FCC PART 15 CLASS B*

# *NOTEBOOK INFOWAY NOTE L3800*

ITAUTEC PHILCO S/A - GRUPO ITAUTEC PHILCO
Rua Santa Catarina, 01 - Tatuapé
CEP 03086-025 - São Paulo – SP – Brazil

## Summary

**1. Certification ..... 3**

**2. General description of equipment under test ..... 4**

2.1. Applicant ..... 4
2.2. Manufacturer ..... 4
2.3. Basic description of equipment under test ..... 4
2.4. Technical features of equipment under test ..... 4

**3. Test configuration of equipment under test ..... 5**

3.1. Test manner ..... 5
3.2. Test system description ..... 5
3.3. Test setup connection diagram ..... 8
3.4. Test software ..... 9

**4. Test general information ..... 9**

4.1. Test facility ..... 9
4.2. Standard measurement methods ..... 9
4.3. Test in compliance with ..... 9
4.4. Investigated frequency range ..... 10
4.5. Test distance ..... 10

**5. Conducted power line test ..... 10**

5.1. Major measuring instruments ..... 10
5.2. Test procedures ..... 10
5.3. AC powerline conducted emission test results ..... 11
5.4. Photographs of AC powerline conducted test configuration ..... 12

**6. Radiated emission test ..... 14**

6.1. Major measuring instruments ..... 14
6.1.1. from 30MHz to 1GHz ..... 14
6.1.2. from 1GHz to 8,5 GHz ..... 14
6.2. Test procedures ..... 14
6.3. Radiated emission test results ..... 15
6.3.1. from 30MHz to 1000MHz ..... 15
6.3.2. from 1GHz to 8,5GHz ..... 16
6.4. Photographs of radiated emission test configuration ..... 17

**7. Measuring equipment used list ..... 19**

# 1. CERTIFICATION

The electromagnetic interference tests which this report describes were conducted by an independent electromagnetic compatibility laboratory, in accordance with the test procedure specified in ANSI C63.4-1992 , CFR 47 Part 15 Subpart B and CISPR 22 Class B.
The test results contained in this report accurately represent the radiated, and power line conducted electromagnetic emissions generated by sample equipment under test at the time of the test.

**Equipment Tested:** Notebook
Model: Infoway Note L3800
Applied by Itautec Philco S/A.

**Sample received Date:** Jan. 15, 2003

**Final test Date** : Feb. 25, 2003

**Test Engineer**: Wagner Benetti

The results show that the sample equipment tested as described in this report is in compliance with CISPR 22 Class B for conducted emission limits and FCC Rules Part 15 Subpart B for radiated emission limits.

Approve & Signature

---
Loiberto Ararigboia Ferreira Verwiebe
Manager

This report could not be partially reproduced. The information is property of **Itautec Philco S.A.** and could not be disclosed by *Instituto de Pesquisas Eldorado* without a formal authorization.

# 2. GENERAL DESCRIPTION OF EQUIPMENT UNDER TEST

## 2.1. Applicant

ITAUTEC PHILCO S/A - GRUPO ITAUTEC PHILCO
Rua Santa Catarina, 01 - Tatuapé
CEP 03086-025 - São Paulo - SP
Inscrição Municipal : 2.280.388-2
CNPJ : 54.526.082/0004-84
Inscrição Estadual : 112.592.646.110

## 2.2. Manufacturer

ITAUTEC PHILCO S/A - GRUPO ITAUTEC PHILCO
Rua Santa Catarina, 01 - Tatuapé
CEP 03086-025 - São Paulo - SP
Inscrição Municipal : 2.280.388-2
CNPJ : 54.526.082/0004-84
Inscrição Estadual : 112.592.646.1101.3.

## 2.3. Basic description of equipment under test

Equipment : Notebook
Model No. : L3800
Trade Name : Itautec Philco S/A.
Data cable : Please see section 2.2 of this test report for details
Power Supply Type : Switching
Power Cord : Non-Shielded, 1.75m, 3 pin

## 2.4. Technical features of equipment under test

- Processor: Intel® Pentium® 4 1.6GHz Mobile
- Memory: 256 MB DDR PC266
- Floppy Disk: 3 ½" 1.44MB integrated
- Drives: Combo drive (DVD-8x CDRW 8x8x24)
- Hard Disk: HD 30 GB Ultra DMA 100 removable
- Display: Active matrix LCD screen TFT 15 " XGA 1400x1050
- Interfaces: 2 PCMCIA,
  2 Channel Universal Serial Bus Ports.,
  1 VGA Port,
  1 Infrared,
  1 Serial Port,
  1 Parallel Port,
  1 PS/2 Keyboard Port / Mouse
  2 Fire Wire IEEE1394 Ports,
  1 TV-Out Port
  Speaker Out, Mic In
- Size (W x H x D): 326x42x267
- Weight: 3,30 Kg with battery

# 3. TEST CONFIGURATION OF EQUIPMENT UNDER TEST

## 3.1. Test manner

a. The EUT was associated with peripherals (Support Units) pursuant to ANSI C63.4-1992 and the operation configuration was selected to maximize the emission characteristics in a typical application.

b. The HP Monitor, HP PS/2 Keyboard, Dell PS/2 Mouse, LeaderShip USB Mouse, Iomega Zip Drive, HP Printer, US Robotics Modem, Speaker System, Microphone, ASUS Dock, Epson LCD Projector, PCMCIA Card 2MB, PCMCIA Card 10/100 Mb/s, VST Fire Wire Hard Drive, were connected to the PC for the EMI test.

c. Frequency range investigated: conduction 150 KHz to 30 MHz, radiation 30 MHz to 8500MHz.

## 3.2. Test system description

Support Unit 1.

| | |
|---|---|
| Description | : HP Monitor |
| Model | : D2837A-60511 |
| Serial Number | : MX92711624 |
| Power Supply Type | : Switching |
| Power Cord | : Nonshielded, Detachable |
| FCC ID | : A3LCHB770 |

Support Unit 2.

| | |
|---|---|
| Description | : HP Keyboard |
| Model Number | : D4950B |
| Serial Number | : E03633MLUS-C |
| Power Supply Type | : N/A |
| Power Cord | : N/A |
| FCC ID | : CIGE03633 |

Support Unit 3.

| | |
|---|---|
| Description | : LeaderShip USB Mouse |
| Model Number | : AGM52U |
| Serial Number | : 104079109 |
| Power Supply Type | : N/A |
| Power Cord | : N/A |
| FCC ID | : N/A |

Support Unit 4.

| | |
|---|---|
| Description | : HP Printer (for parallel interface port) |
| Model Number | : C6429A |
| Serial Number | : US9791K00M |
| Power Supply Type | : Switching |
| Power Cord | : Nonshielded, Detachable |
| FCC ID | : N/A |

Support Unit 5.

| | |
|---|---|
| Description | : Iomega ZIP Drive (for USB interface port) |
| Model Number | : 7250USBPCM8P |
| Serial Number | : 7SB052A00G |
| Power Supply Type | : N/A |
| Power Cord | : N/A |
| FCC ID | : N/A |

Support Unit 6.

| | |
|---|---|
| Description | : Speaker System |
| Model Number | : CN-083EHG-47782 0B8-0910 |
| Serial Number | : N/A |
| Power Supply Type | : N/A |
| Power Cord | : N/A |
| FCC ID | : N/A |

Support Unit 7.

| | |
|---|---|
| Description | : Microphone |
| Model Number | : N/A |
| Serial Number | : N/A |
| Power Supply Type | : N/A |
| Power Cord | : N/A |
| FCC ID | : N/A |

Support Unit 8.

| | |
|---|---|
| Description | : ASUS Dock ( for Dock Station port ) |
| Model Number | : PortDock |
| Serial Number | : AS29XP022900 |
| Power Supply Type | : N/A |
| Power Cord | : N/A |
| FCC ID | : N/A |

Support Unit 9.

| | |
|---|---|
| Description | : Epson LCD Projector (for TV port ) |
| Model Number | : EMP-500 |
| Serial Number | : B920080145A |
| Power Supply Type | : Switching |
| Power Cord | : Nonshielded, Detachable |
| FCC ID | : N/A |

Support Unit 10.

| | |
|---|---|
| Description | : VST Fire Wire Hard Drive ( for Fire Wire port ) |
| Model Number | : FW9560-G |
| Serial Number | : 00643130037 |
| Power Supply Type | : Switching |
| Power Cord | : Nonshielded |
| FCC ID | : N/A |

Support Unit 11.

| | |
|---|---|
| Description | : External Fax Modem – US Robotics – 56K ( for serial port ) |
| Model Number | : 0701 |
| Serial Number | : 22U7G1PBQWLY |
| Power Supply Type | : Switching |
| Power Cord | : Nonshielded |
| FCC ID | : CJEMUL-35730-M5-E |

Support Unit 12.

| | |
|---|---|
| Description | : Dell PS/2 Mouse |
| Model Number | : X06-08477 |
| Serial Number | : 63618-OEM-3807145-1 |
| Power Supply Type | : N/A |
| Power Cord | : N/A |
| FCC ID | : N/A |

Support Unit 13.

| | |
|---|---|
| Description | : PCMCIA Card 2MB ( for PCMCIA port ) |
| Model Number | : S90023 |
| Serial Number | : 002F010001K0009 V.1.0 |
| Power Supply Type | : N/A |
| Power Cord | : N/A |
| FCC ID | : N/A |

Support Unit 14.

| | |
|---|---|
| Description | : PCMCIA Card 10/100 Mb/s ( for PCMCIA port ) |
| Model Number | : 335511-003 |
| Serial Number | : 00963324909 |
| Power Supply Type | : N/A |
| Power Cord | : N/A |
| FCC ID | : N/A |

### 3.3. Test setup connection diagram

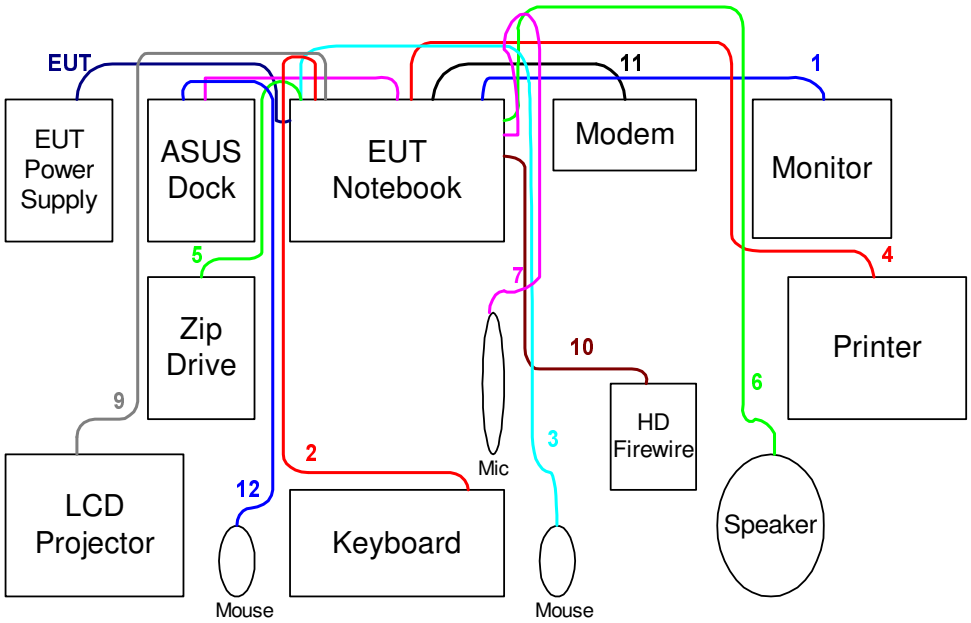


Fig. 1 – Diagram Test Setup

1. The I/O cable connected the Notebook to the Support Unit 1.
2. The I/O cable connected the Notebook to the Support Unit 2.
3. The I/O cable connected the Notebook to the Support Unit 3.
4. The I/O cable connected the Notebook to the Support Unit 4.
5. The I/O cable connected the Notebook to the Support Unit 5.
6. The I/O cable connected the Notebook to the Support Unit 6.
7. The I/O cable connected the Notebook to the Support Unit 7.
8. The I/O cable connected the Notebook to the Support Unit 8.
9. The I/O cable connected the Notebook to the Support Unit 9.
10. The I/O cable connected the Notebook to the Support Unit 10.
11. The I/O cable connected the Notebook to the Support Unit 11.
12. The I/O cable connected the Notebook to the Support Unit 12.

EUT is connected to the EUT Power Supply.

### 3.4. Test software

An executable program, TESTERS.EXE run under WIN 2000, which generates a complete line of continuously repeating exercise patterns was used as the test software.

The program executed as follows :

a. Turn on the power of all equipment.

b. The Notebook write and reads byte in the Floppy Disk Drive, Hard Disk, Fire Wire Hard Drive, USB Zip Drive, and PCMCIA Memory Card.

c. The Notebook sends " H" characters to the monitor, and the monitor displays " H" patterns on the screen.

d. The Notebook sends “H” characters to the LCD Projector, and Projector displays “H” patterns on the wall.

e. The Notebook sends " Reset" messages to the printer.

f. The Notebook sends " H" characters to the external modem through the serial port.

g. The Notebook sends " H" characters to the internal modem.

h. The Notebook write and reads byte in the server, trough the 10/100Mb/s PCMCIA Card.

i. Repeat the steps from b to g.

At the same time, “Media Player” was executed to play audio, and the “Sound Recorder” record the song.

## 4. TEST GENERAL INFORMATION

### 4.1. Test facility

This test was carried out by INSTITUTO DE PESQUISAS ELDORADO in an Semi-anechoic Chamber test site, for the radiated emission test and the EMC Lab for the conducted emission test.

Semi-Anechoic Chamber and EMC Lab. : INSTITUTO DE PESQUISAS ELDORADO
Departamento de Serviços Tecnológicos
Rodovia SP 340 (Campinas Mogi Mirim), km 118.5
CEP 13.088-902 – Fazenda Pau´Dalho
Campinas – SP – Brazil
Fone: +55 19 3757-3137
Fax: +55 19 3757-3131

### 4.2. Standard measurement methods

ANSI C63.4-1992 –

### 4.3. Test in compliance with

FCC Part 15 Class B, CISPR 22 Class B

### 4.4. Investigated frequency range

a. Conduction: from 150 kHz to 30 MHz
b. Radiation : from 30 MHz to 8,500 MHz

### 4.5. Test distance

The test distance of radiated emission from antenna to EUT is 3 m (from 30 MHz~8,500MHz).

## 5. CONDUCTED POWER LINE TEST

Conducted Emissions were measured from 150 kHz to 30 MHz with a bandwidth of 9 KHz on the 115 VAC power and return leads of the EUT, according to the methods defined in ANSI C63.4-1992 Section 3.1. The EUT was placed on a nonmetallic stand in a shielded room 0.8 meters above the ground plane as shown in section 5.3. The interface cables and equipment positioning were varied within limits of reasonable applications to determine which position produced maximum conducted emissions.

### 5.1. Major measuring instruments

| | | |
|---|---|---|
| Test Receiver | ESI026 – Rohde & Schwarz | |
| | Attenuation | 0 dB |
| | Start Frequency | 0.15 MHz |
| | Stop Frequency | 30 MHz |
| | Step MHz | 0.007MHz |
| | IF Bandwidth | 9 kHz |

### 5.2. Test procedures

a. Place the EUT 0.4 meter from the conducting wall of the shielding room and keep at least 80 centimeters from any other grounded conducting surface.
b. Connect EUT to the power mains through a line impedance stabilization network (LISN).
c. Connect all the support units to the other LISN.
d. The LISN provides 50 ohm coupling impedance for the measuring instrument.
e. The FCC states that a 50 ohm, 50 micro Henry LISN should be used.
f. Both sides of AC line were checked for maximum conducted interference.
g. The frequency range from 150 kHz to 30 MHz was searched.
h. Set the test-receiver system to Peak Detect Function and Specified Bandwidth with Maximum Hold Mode.
i. If the emission level of the EUT in peak mode was 6 dB lower than the limit specified, then testing will be stopped and peak values of EUT will be reported, otherwise, the emissions which do not have 6 dB margin will be retested one by one using the quasi-peak method and reported.

## 5.3. AC powerline conducted emission test results

- Frequency Range of Test : from 0.15 MHz to 30 MHz
- Temperature : 24℃ +/- 0,5ºC
- Relative Humidity : 47% +/- 3%
- Test Date : Feb. 24, 2003
- All emissions not reported here are more than 10 dB below the prescribed limit.

**Table 1 – Power Line Conducted Emission (Quasi-Peak)**

| Frequency MHz | Level dBµV | Limit dBµV | Margin dB | Line |
|---|---|---|---|---|
| 0.150000 | 40.00 | 66.00 | 26.00 | N |
| 0.210000 | 36.00 | 63.21 | 27.21 | N |
| 0.280000 | 30.00 | 60.82 | 30.82 | N |
| 0.420000 | 32.20 | 57.45 | 25.25 | N |
| 4.615000 | 30.20 | 56.00 | 25.80 | L1 |
| 4.750000 | 29.50 | 56.00 | 26.50 | L1 |

Test Engineer :

---
Jamilson Ramos

## 5.4. Photographs of AC powerline conducted test configuration

The photographs show the configuration used to generate maximum emission.

Fig. 2 – Front view of the Conducted EMI Test Setup

* The position of the mouse was such as to produce the higher conducted emission.

Fig. 3 – Side view of the Conducted EMI Test Setup

# 6. RADIATED EMISSION TEST

Radiated emissions from 30 MHz to 8,500 MHz were measured with a bandwidth of 120 kHz, according to the methods defined in ANSI C63.4-1992. The EUT was placed on a nonmetallic stand in the semi-anechoic chamber, 0.8 meter above the ground plane, as shown in section 6.4. The interface cables and equipment positions were varied within limits of reasonable applications to determine positions producing maximum radiated emissions.

## 6.1. Major measuring instruments

### 6.1.1. from 30MHz to 1GHz

- Amplifier (Rohde & Schwarz)
  Attenuation 0 dB
  RF Gain 25 dB
  Signal Input 1 GHz to 8,5 GHz

- EMI Receiver ( Rohde & Schwarz – ESI026 )
  Attenuation 0 dB
  Start Frequency 30 MHz
  Stop Frequency 1000 MHz
  Resolution Bandwidth 120 kHz
  Detector: Quasi-Peak

### 6.1.2. from 1GHz to 8,5 GHz

- Receiver (Rohde & Schwarz – ESI026)
  Attenuation 0 dB
  Start Frequency 1000 MHz
  Stop Frequency 8500 MHz
  Resolution Bandwidth 1 MHz
  Detector: Average

## 6.2. Test procedures

a. The EUT was placed on a rotary table top 0.8 meter above ground.

b. The EUT was set 3 meters from the interference receiving antenna, which was mounted on the top of a variable height antenna tower.

c. The table was rotated 360 degrees to determine the position of the highest radiation.

d. The antenna is a half wave dipole and its height is varied between one meter and four meters above ground to find the maximum value of the field strength both horizontal and vertical polarization of the antenna are set to make the measurement.

e. For each suspected emission the EUT was arranged to its worst case and then was tuned the antenna tower (from 1 M to 4 M) and turn table (from 0 degree to 360 degrees) to find the maximum reading.

f. Set the test-receiver system to Peak Detect Function and specified bandwidth with Maximum Hold Mode.

g. If the emission level of the EUT in peak mode was 6 dB lower than the limit specified, then testing will be stopped and peak values of EUT will be reported, otherwise, the emissions which do not have 6 dB margin will be repeated one by one using the quasi-peak method and reported.

## 6.3. Radiated emission test results

### 6.3.1. from 30MHz to 1000MHz

- Temperature : 25°C +/- 1,5ºC
- Relative Humidity : 59% +/- 5%
- Test Date : Feb. 25, 2003
- Emission level (dBµV/m) = 20 log Emission level (µV/m)
- Corrected Reading : Antenna Factor + Cable Loss + Reading = Emission
- All emissions not reported here are more than 10 dB below the prescribed limit.

**Table 2 – Radiated Emission 30MHz–1000MHz (Quasi-Peak)**

| Frequency (MHz) | Antenna Factor (dB/m) | Cable Loss (dB) | Reading (dBµV) | Emission (dBµV/m) | Limit | | Margin (dB) | Height (cm) | Azimuth (deg) | Pol. |
|---|---|---|---|---|---|---|---|---|---|---|
| | | | | | (µV/m) | (dBµV/m) | | | | |
| 31.980000 | 17.9 | 0,30 | 18,70 | 36.90 | 100 | 40.00 | 3.1 | 100 | 359 | V |
| 47.940000 | 10.1 | 0,40 | 20,60 | 31.10 | 100 | 40.00 | 8.9 | 100 | 128 | V |
| 88.260000 | 9.4 | 0,50 | 18,70 | 28.60 | 150 | 43.50 | 14.9 | 400 | 291 | H |
| 589.860000 | 22.1 | 1,60 | 19,40 | 43.10 | 200 | 46.00 | 2.9 | 171 | 199 | H |
| 964.740000 | 26.9 | 1,90 | 8,60 | 37.40 | 500 | 54.00 | 16.6 | 169 | 359 | V |

Test Engineer :

---
Amar Ndiaye

### 6.3.2. from 1GHz to 8,5GHz

- Temperature : 25°C +/- 1,5 ºC
- Relative Humidity : 59% +/- 5%
- Test Date : Feb. 26, 2003
- Emission level (dBµV/m) = 20 log Emission level (µV/m)
- Corrected Reading : Antenna Factor + Cable Loss + Reading = Emission
- All emissions not reported here are more than 10 dB below the prescribed limit.

**Table 3 – Radiated Emission 1GHz-8,5GHz (Average)**

| Frequency (GHz) | Antenna Factor (dB/m) | Cable Loss (dB) | Reading (dBµV) | Emission (dBµV/m) | Limit | | Margin (dB) | Height (cm) | Azimuth (deg) | Pol. |
|---|---|---|---|---|---|---|---|---|---|---|
| | | | | | (µV/m) | (dBµV/m) | | | | |
| 1.00000 | 30.1 | 2.00 | 6.10 | 38.20 | 500 | 54.00 | 15.80 | 102 | 0 | V |
| 1.09300 | 29.9 | 2.00 | 9.90 | 41.80 | 500 | 54.00 | 12.20 | 249 | 0 | V |
| 1.24300 | 29.5 | 2.20 | 1.00 | 32.70 | 500 | 54.00 | 21.30 | 100 | 178 | V |
| 1.35080 | 28.8 | 2.30 | 7.50 | 38.60 | 500 | 54.00 | 15.40 | 233 | 278 | V |
| 1.43080 | 28.7 | 2.40 | -4.40 | 26.70 | 500 | 54.00 | 27.30 | 269 | 352 | V |
| 1.51000 | 27.8 | 2.50 | 6.50 | 36.80 | 500 | 54.00 | 17.20 | 270 | 275 | V |

Test Engineer :

---
Amar Ndiaye

## 6.4. Photographs of radiated emission test configuration

The photographs show the configuration that generated the maximum emission.

Fig. 4 – Rear view of the Radiated EMI Test Setup

Fig. 5 – Front view of the Radiated EMI Test Setup

# 7. MEASURING EQUIPMENT USED LIST

| Equipment | Model | Manufacturer | Identification | Test |
|---|---|---|---|---|
| Semi-Anechoic Chamber | SAC | ETS | 1136-00 | Radiated |
| EMI Test Receiver | ESI26 | Rohde & Schwarz | 1432 | Radiated |
| Control Software | ES-K1 | Rohde & Schwarz | N/A | Radiated |
| Biconilog Antenna | 3142 | EMCO | 1176-06 | Radiated |
| Horn Antenna | 3115 | EMCO | 1176-05 | Radiated |
| Antenna Mast / Turntable Controller | 1050 | EMCO | 1176-27 | Radiated |
| Pre Amplifier | TS-PR18 | Rohde & Schwarz | 1176-06 | Radiated |
| Relay Switch | SCU | Rohde & Schwarz | 1176-02 | Radiated |
| Antenna Mast | - | EMCO | 1176-00 | Radiated |
| Wooden Table | - | - | N/A | Radiated |
| EMI Receiver | ESI-07 | Rohde & Schwarz | 301058 | Conducted |
| LISN | ESH5Z3 | Rohde & Schwarz | 3J97BNJSN266 | Conducted |
| Control Software | ESK1 | Rhode & Schwarz | N/A | Conducted |
| Wooden Table | - | - | N/A | Conducted |

Table 4 – Equipment used in Conducted and Radiated Emission Tests