dAP technologies

Rugged Tablet Computer

User Manual

M9020

dAP technologies
Toll Free : +1 (855) DAP-TECH (327-8324)
www.daptech.com

United States
8945 South Harl Avenue, Suite 112
Tempe, Arizona, 85284 USA
Phone: +1 (855) DAP-TECH

2915 Premiere Parkway, Suite 300
Duluth, Georgia, 30097 USA
Phone: +1 (855) DAP-TECH

Canada
4535 Wilfrid Hamel Blvd., Suite 100
Quebec City, QC Canada G1P 2J7
Toll Free: +1 (800) 363-1993
Phone: +1 (418) 681-9394
Fax: +1 (418) 681-0799

Europe, Middle East, Africa
9 The Chambers, Vineyard
Abingdon UK OX14 3PX
Phone: +44 (0) 1235 462130
Fax: +44 (0) 1235 462131

Copyright © 2014 DAP Technologies. All rights reserved.

No part of this manual may be reproduced, copied, translated, or transmitted in any form or by any means, electronic or mechanical, for any purpose, without the written permission of DAP Technologies.

TRADEMARKS

All product names, trademarks or logos mentioned herein are the properties of their respective owners.

Microsoft, Windows, and the Windows logo are either registered trademarks or trademarks of Microsoft Corporation in the United States and/or other countries. Microsoft products are licensed to OEMs by Microsoft Licensing, Inc., a wholly owned subsidiary of Microsoft Corporation.

The Bluetooth® word mark and logos are registered trademarks owned by Bluetooth SIG, Inc.

All other brand and product names are trademarks or registered trademarks of their respective owners.

NOTE:

Display images shown may vary slightly from actual display. Information in this manual is subject to change without notice.

DISCLAIMER

DAP Technologies reserves the right to make any product changes without notice, including circuits and/or software described or contained in this manual in order to improve design and/or performance. DAP Technologies assumes no responsibility or liability for the use of the described product(s), conveys no license or title under any patent, copyright, or masks work rights to these products, and makes no representations or warranties that these products are free from patent, copyright, or mask work right infringement, unless otherwise specified. Applications that are described in this guide are for illustration purposes only. DAP Technologies makes no representation or warranty that such application will be suitable for the specified use without further testing or modification.

WARRANTY

DAP Technologies warrants that each of its products is free from material and workmanship defect for a period of one year starting from the invoice date. If the customer discovers a defect, DAP Technologies will, at its option, repair or replace the defective product at no charge to the customer, provided it is returned during the warranty period, with transportation charges prepaid. The returned product must be properly packaged in its original packaging to obtain warranty service.

Contents

Preface.....v

Notational Conventions vi

Getting Started.....1-1

Unpacking 1-2

Optional Items.....1-3

Device Overview 1-4

Front View.....1-4

Rear View (With Compartment Cover and Battery Packs).....1-6

Rear View (Without Compartment Cover and Battery Packs)..1-7

Top and Bottom View.....1-9

Installing the Hand Strap and Stylus.....1-10

Removing the Stylus.....1-11

Releasing the Compartment Cover 1-12

Tightening the Compartment Cover.....1-13

Installing the Memory Card 1-13

Removing the Memory Card.....1-14

Installing the SIM Card 1-15

Installing the Battery Pack.....1-17

Removing the Battery Pack 1-18

Connecting to AC Power 1-19

Turning the M9020 On and Off.....1-20

Turning On.....1-20

Turning Off.....1-21

Operating Your Tablet Computer 2-1

Using the Touch Screen 2-2
Calibrating the Screen 2-3
Using the Integrated Keyboard 2-5
Keyboard Overview 2-5
Special Function Keys 2-5
Navigation Keys 2-6
Using the Panel Keys 2-6
Using Wireless LAN 2-7
Turning the Wireless Radio On and Off 2-7
Connecting to a Wireless Network 2-9
Using Bluetooth 2-10
Turning the Bluetooth On and Off 2-10
Turning the Bluetooth Adapter On and Off 2-11
Pairing with Bluetooth Devices 2-12
Configuring Bluetooth Settings 2-15
Using the WWAN Network 2-17
Connecting to a WWAN Network 2-17
Using AirCard® Watcher 2-18
Configuring AirCard® Watcher Settings 2-20
Using GPS 2-22
Turning the GPS On and Off 2-22
Enabling the Location Sensors 2-23
Using u-center 2-24
Using the Camera 2-26
Opening the Camera 2-26
The Camera Screen 2-27
Shooting Photos 2-28
Camera Settings 2-29
Using the DAP Control Center 2-32
Opening the DAP Control Center 2-32
Viewing System Information 2-33
Defining Hotkeys 2-34

Using the Barcode Reader 2-36
Using ScannerManager 2-37
Working With Bluetooth Scanners 2-40

Connecting Your M9020 3-1
Connecting USB Devices 3-2
USB Port Connection.....3-2
Connecting VGA Devices 3-3
Connecting Audio Devices 3-4
Connecting Serial Devices 3-5

Managing Power 4-1
Battery Pack 4-2
Charging the Battery Pack.....4-2
Checking the Battery Level.....4-4
Replacing the Battery Pack 4-5
Power Management 4-6
Power Saving Tips.....4-6

Expanding Your M9020 5-1
Connecting the Docking Station 5-2
Overview of the Vehicle Docking Station 5-2
Docking the M9020.....5-4
Connecting the Docking Station 5-6

Maintenance, Troubleshooting and Specifications A-1
Taking Care of Your M9020 .....A-2
Location Guidelines A-2
General Guidelines A-2
Cleaning Guidelines.....A-2
Touchscreen Guidelines A-2
Troubleshooting.....A-3
M9020 Specifications A-5

Regulatory Information B-1

Important Information B-2

Safety Information (EN) B-3

Informations de sécurité (FR) B-4

About the Batteries B-5

About the Adapter B-5

FCC Regulations B-6

ANSI/ISA 12.12.01-2013 ..... B-7

CAN/CSA C22.2 No. 213-M1987 ..... B-7

CE Notice (European Union) B-7

RF Exposure Information (SAR) B-8

IC Regulations B-8

Important Note B-9

Preface

This manual contains information that will help you operate this rugged computer. It is divided into six chapters and two appendices.

- **Chapter 1: Getting Started**, takes you through the process of setting up your M9020 and identifying its external components.
- **Chapter 2: Operating Your M9020**, tells you how to use M9020's components and features.
- **Chapter 3: Connecting Your M9020**, provides information on installing and using peripheral devices.
- **Chapter 4: Managing Power**, provides information on power management.
- **Chapter 5: Expanding Your M9020**, provides information on installing and using optional accessories, such as docking stations, expansion modules, etc.
- **Appendix A**, provides technical specifications and information on caring for your M9020, and gives solutions to common problems you may encounter when using the device.
- **Appendix B**, provides regulatory information and safety notices on your M9020.

Notational Conventions

Throughout this manual, the following conventions are used to distinguish elements of text.

> NOTE: Identifies additional information that requires special attention.

> CAUTION: Identifies important information that, if not followed, may result in loss of data or damage to the device.

Hardware and keyboard keys are shown in a bold typeset. For example:

Press the F1 key to complete.

A title, command, setup item, value, option, or button that you can see on the screen is shown in bold typeface. For example:

Select **When I press the power button**, set it to **Shut down**, and then tap the **Save changes** button.

CHAPTER 1

Getting Started

Congratulations on purchasing the DAP M9020. Its rugged design allows you to use it in harsh outdoor environments. You can use it under blazing heat, subzero cold, driving rain or dusty surroundings – places you could not take a consumer-grade tablet computer.

This chapter tells you, step by step, how to get the M9020 up and running. You will find instructions for the following procedures:

- Unpacking
- Device Overview (an explanation of the external components and their functions)
- Installing the Hand Strap
- Installing the SIM Card
- Installing Battery Packs and Connecting to AC Power
- Turning the M9020 On and Off

Unpacking

After unpacking the shipping carton, you should find these standard items. Inspect all items. If any item is damaged or missing, notify your dealer immediately.

√ M9020

√ Battery Packs

√ Power Adapter

√ AC Power Cord

√ Stylus

√ Hand Strap

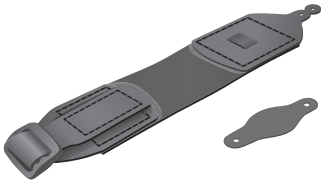

√ VGA Cable

√ Screws

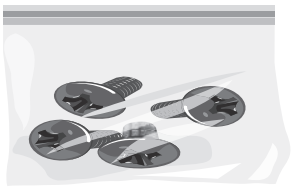

√ Cleaning Cloth

√ Screen Protector Film

√ Windows 7 Certificate of Authenticity Label (COA)

√ Quick Start Guide

Keep the shipping carton and packaging materials in case you need to ship or store the M9020 in the future.

> NOTE: Actual items may slightly differ depending on the purchased configuration.

Optional Items

√ Docking Station

√ Battery Charger

Device Overview

Front View

No.	Item		Description
1	2.0 MP Front Camera		Allows you to take photos.
2	Barcode Scanner Button	IIIIII	Press to activate the barcode scanner located on the top left corner of M9020.
3	Menu and Function Keys		Common Windows function keys (F1 ~ F5, Menu).

No.	Item		Description
4	LED		**Battery Mode (On Battery Power):** • Solid Green: *Power on*. • Blinking Greeen: *Suspend: Every 3 seconds*. • Blinking Red (The average of two batteries)**:** *- <= 20%, blinking interval 5s*. *- <= 15%, blinking interval 3s*. *- <= 10%, blinking interval 1s.* *- <= 5%, Hibernate.* *(Depends on OS setting).* • Solid Red: *Either Battery #1 or Battery #2 is missing*. **AC Mode (On External Power):** • Solid Green: *Fully charged: Both batteries are fully charged*. • Blinking Greeen: *Suspend: Every 3 seconds*. • Solid Blue: *Either battery is being charged.* • Solid Red**:** *- Faulty: Cannot charge*. *- Either Battery #1 or Battery #2 is missing.*
5	Keyboard		Integrated keyboard.
6	Power Switch		Press to turn on the M9020.
7	Speaker		Integrated speaker.
8	Camera Button		Press to access the front / rear camera feature.
9	Light Sensor		Provides automatic display brightness functionality.

Rear View (With Compartment Cover and Battery Packs)

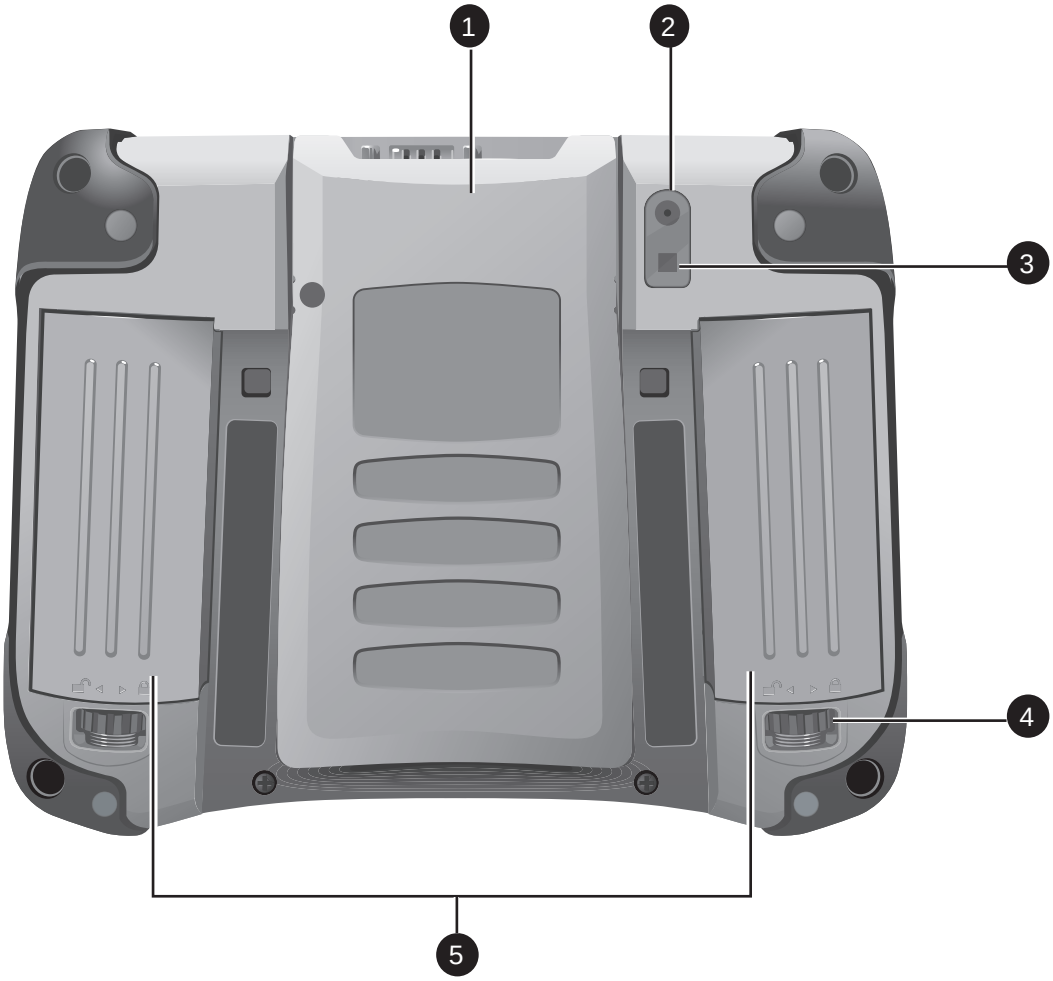

No.	Item	Description
1	Compartment Cover	Covers the internal connectors. See the connectors in “Rear View (Without Compartment Cover and Battery Packs)” on page 1-7.
2	5.0 MP Rear Camera	Allows you to take photos.
3	Camera Flash	Provides flash lighting for use with the camera or just as an assisting light.
4	Battery Lock Latch	Rotate the latch to lock or unlock the battery pack.
5	Battery Packs	Supplies power to your M9020 when external power is not connected. **NOTE**: At least one battery pack is required to power up the M9020.

Rear View (Without Compartment Cover and Battery Packs)

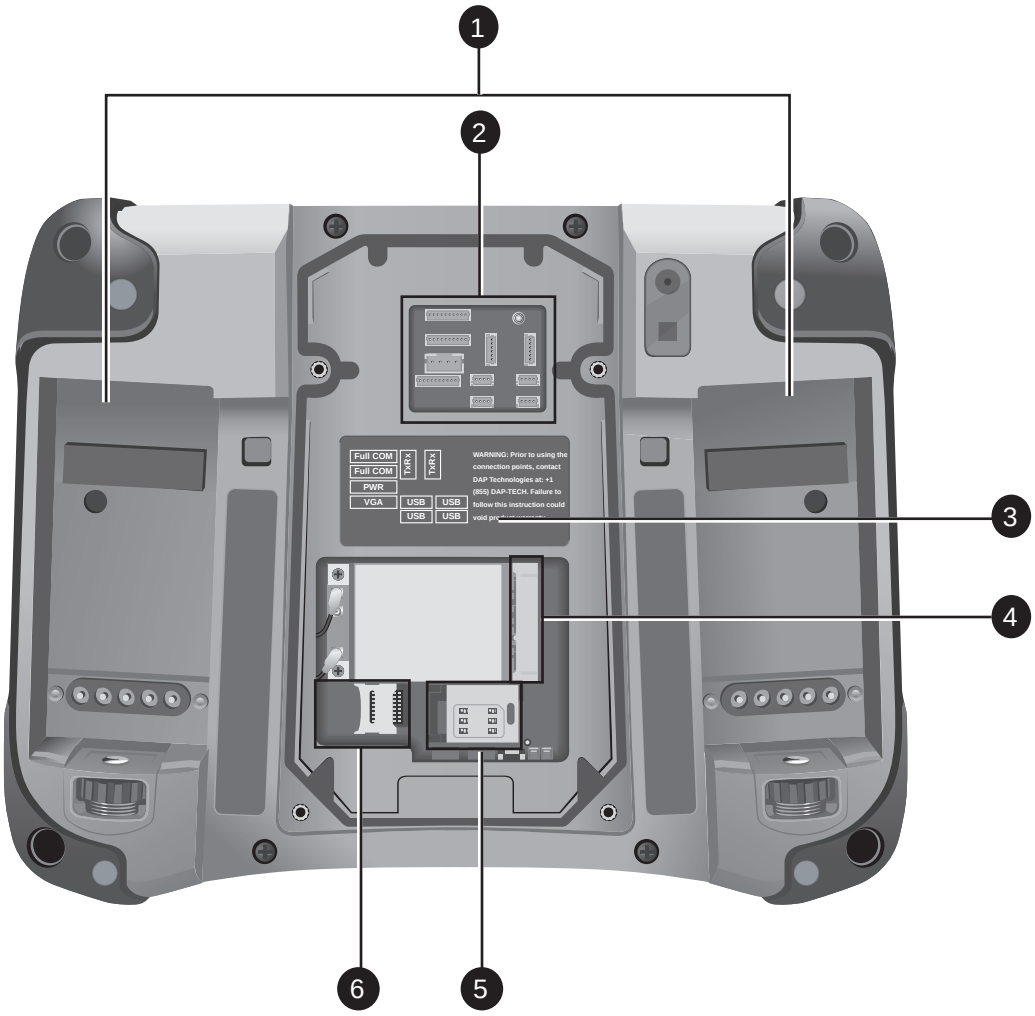

No.	Item	Description
1	Battery Bays	Bays for battery pack installation.
2	Cable Connectors	See more “Cable Connectors Placement” on page 1-8.
3	Cable Connectors Location Label	This label includes information about the connector placement under the compartment cover.
4	WWAN Card Connector	Connection for the WWAN card. **NOTE**: On the illustration the WWAN card is already connected.
5	SIM Card Slot	For installation of a SIM card for WWAN data network connectivity.
6	MicroSD card slot	For installation of a Micro SD memory card.

Cable Connectors Placement

The cable connectors are located under the compartment cover on the rear panel. The following image illustrates the connector locations.

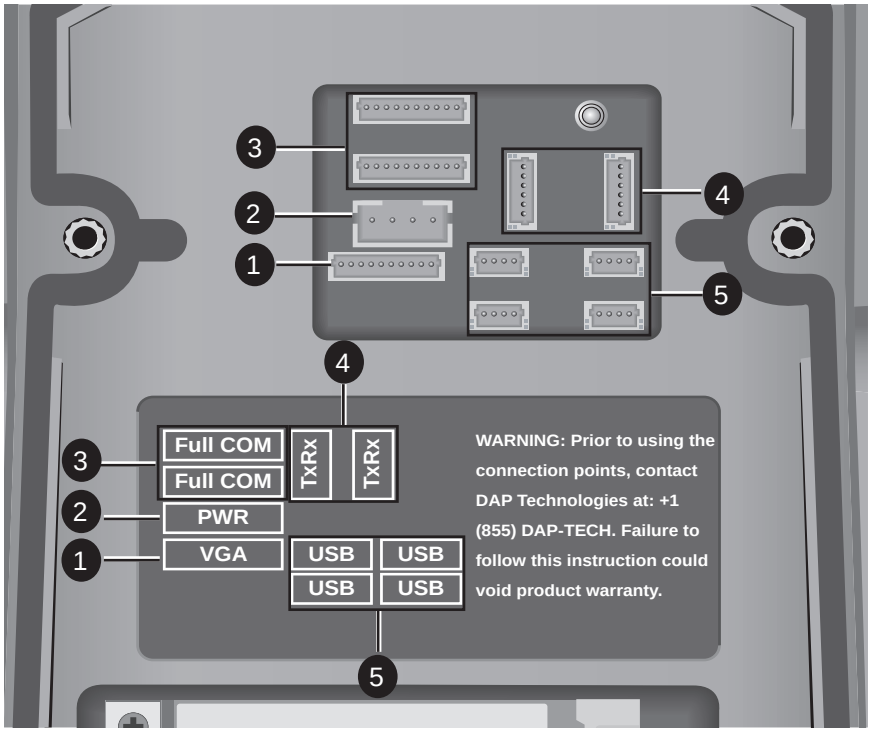

No.	Item
1	VGA
2	PWR
3	2x Full COM
4	2x TxRx
5	4x USB

Top and Bottom View

Top View

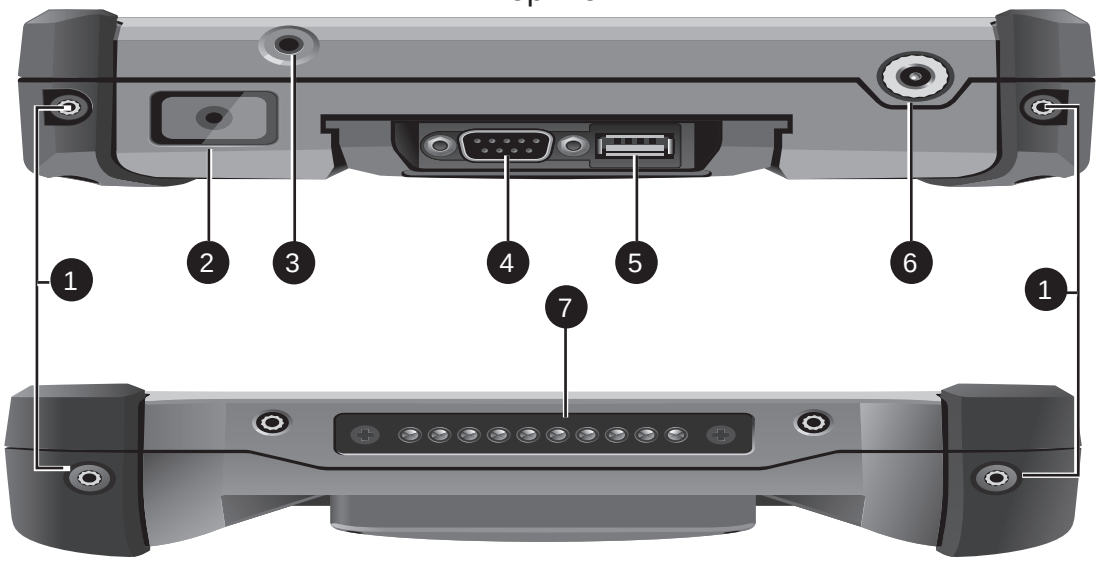

Bottom View

No.	Item	Description
1	Screw Holes for Hand Strap	To attach the Hand strap to the side of the M9020.
2	Barcode Reader	For reading 1D/2D barcodes.
3	Audio Connector	Connects to a stereo headset, external speakers, or an audio recording device.
4	RS-232 Connector	Connection for serial devices, such as a scanner, printer, etc.
5	USB Port	Connection for USB 2.0 compatible devices such as a USB storage.
6	Power Connector	Connects to the AC adapter.
7	Docking Connector	Connects to a docking station (optional).

Installing the Hand Strap and Stylus

Your M9020 comes with a stylus for use with the touch screen.

For storing the stylus, you need to attach the supplied hand strap to your M9020.

Perform the following to prepare and install the hand strap and stylus to your M9020:

1. Align the screws on the hand strap with the screw holes on the top and bottom of M9020.
2. Use the tip of the stylus to attach the screw on the hand strap to the screw hole on top of M9020.

3. Repeat step 2 for the bottom side of M9020.

4. Insert the stylus into the stylus loop on the hand strap.

Removing the Stylus

Pull the stylus by its tab to remove it from the hand strap.

Releasing the Compartment Cover

To access the connectors under the compartment cover, you need to release the cover first.

Perform the following to release the compartment cover:

1. Use the tip of the stylus to release the four (4) screws on the compartment cover.

> CAUTION: Avoid damaging the cable connectors. RS-232 and USB cables are connected to the motherboard under the compartment cover.

2. Lift the cover in an angle as shown.

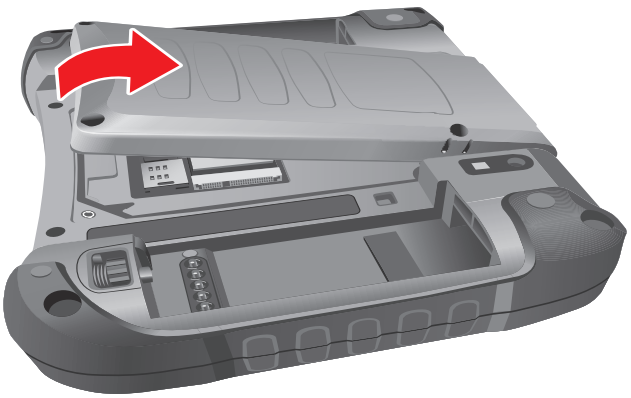

Tightening the Compartment Cover

After the connections are complete, slide the tabs on the compartment cover into the slots on the top of the M9020.

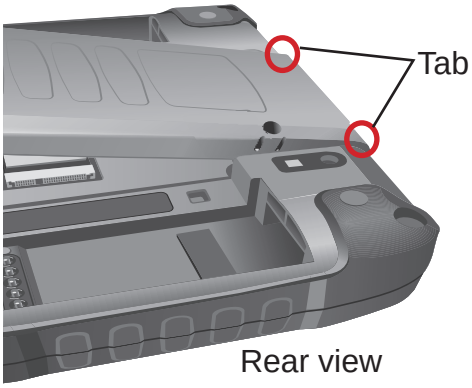

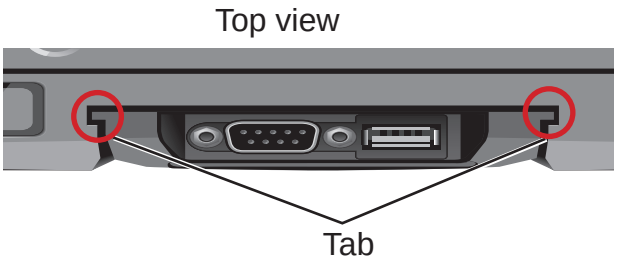

Installing the Memory Card

The M9020 has a memory card slot for additional storage space.

Perform the following to install a microSD card in your M9020:

1. Release the compartment cover. See “Releasing the Compartment Cover” on page 1-12.
2. Slide the microSD socket cover to the “**OPEN**” direction.

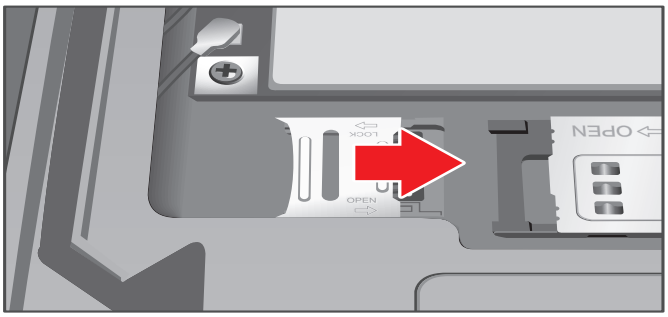

3. Open the socket cover.

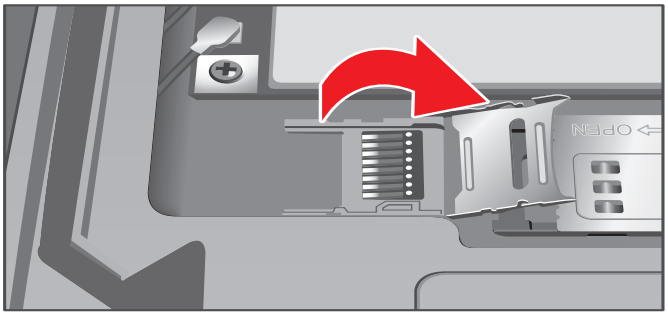

4. Place the microSD card into the socket, connectors facing the golden socket connectors.

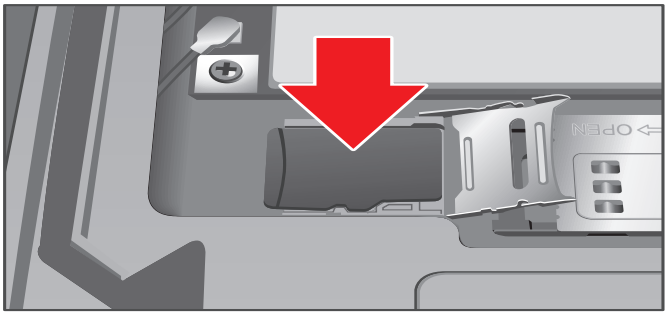

5. Close the microSD socket cover.

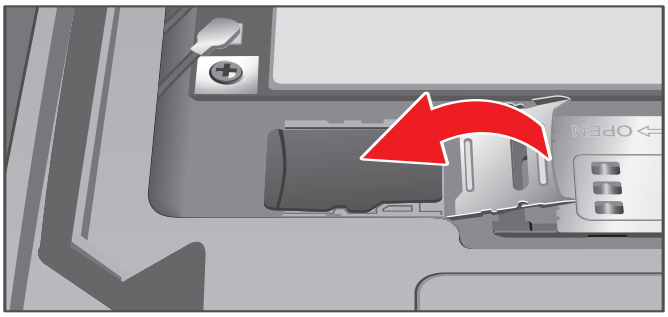

6. Slide the microSD socket cover to the “**LOCK**” direction.

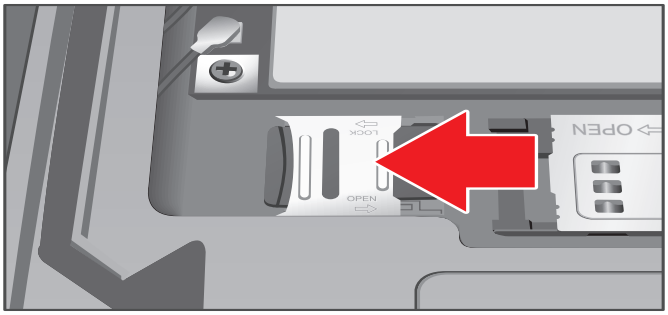

7. Tighten the compartment cover. See “Tightening the Compartment Cover” on page 1-13.

Removing the Memory Card

Follow the microSD card installation steps in reverse order, to remove the microSD card.

Installing the SIM Card

The M9020 supports data connection using WWAN SIM cards.

Perform the following to install the SIM card in your M9020:

1. Release the compartment cover. See “Releasing the Compartment Cover” on page 1-12.
2. Slide the SIM card holder to the “**OPEN**” direction.

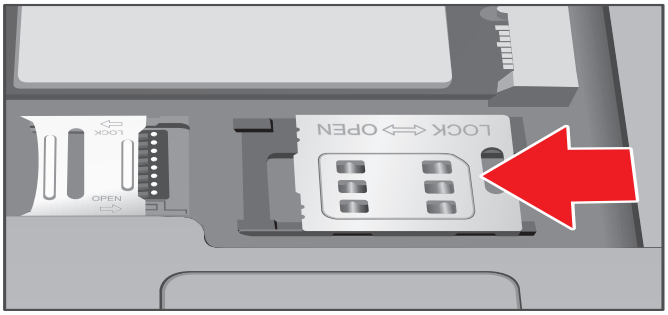

3. Open the SIM card holder as shown.

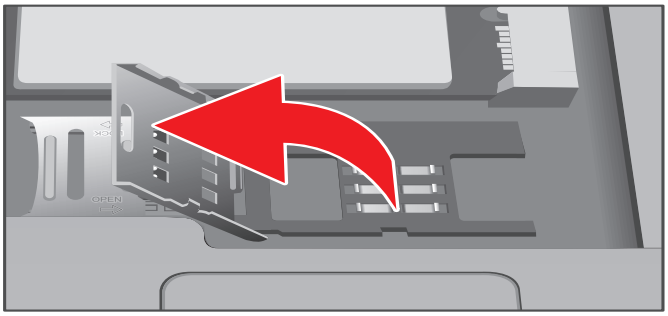

4. Insert the SIM card into the holder. Make sure the golden contacts face the socket.

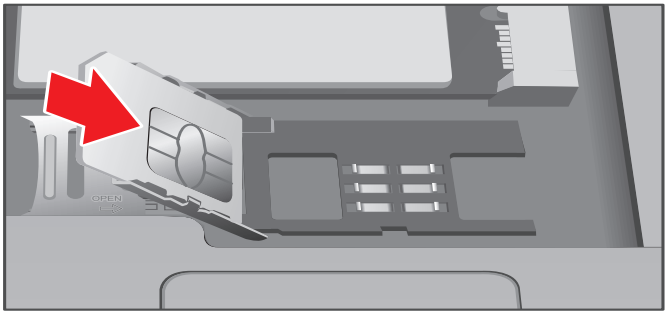

5. Close the SIM card holder.

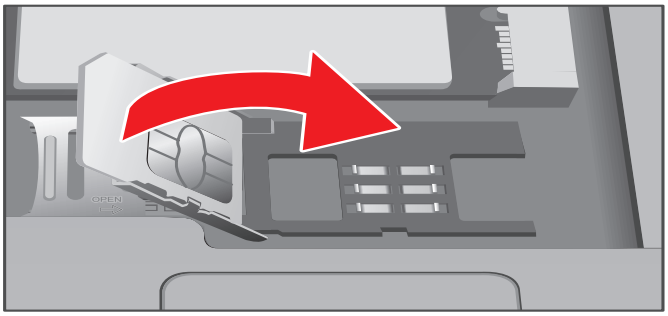

6. Slide the SIM card holder to the “**LOCK”** direction.

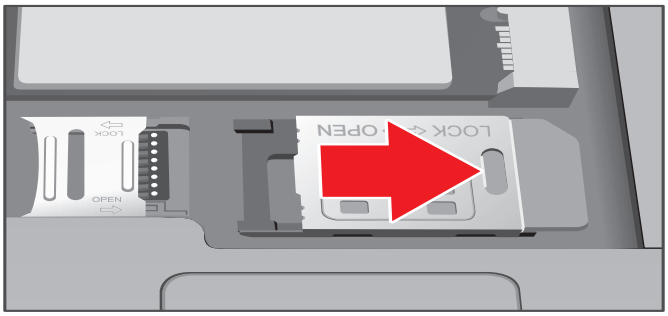

7. Tighten the compartment cover. See “Tightening the Compartment Cover” on page 1-13.

> NOTE:
> - For more information on connecting to a WWAN network, see “Connecting to a WWAN Network” on page 2-17.

Removing the SIM Card

1. Turn off the M9020 (see “Turning On” on page 1-20).
2. Follow the SIM card installation steps in reverse order, to remove the SIM card. See “Installing the SIM Card” on page 1-15.