CHAPTER 3

Connecting Your M9020

You can extend the capabilities of your M9020 by connecting other peripheral devices. When using a device, be sure to read the instructions accompanying the device together with the relevant section in this chapter.

This chapter gives guidelines on installing and using the following devices:

- USB
- VGA
- Audio
- Serial

Connecting USB Devices

Your M9020 has one USB port available on the top of the compartment cover.

USB Port Connection

Use the USB port to connect USB devices, such as a flash disk drive, scanner, printer, keyboard, and mouse.

To connect a USB device, simply plug the device cable into the USB port of your M9020.

Connecting VGA Devices

Your M9020 has one VGA port for connecting VGA devices, such as an external monitor.

Perform the following, to connect a VGA device:

1. Release the compartment cover. See “Releasing the Compartment Cover” on page 1-12.
2. Gently disconnect the RS-232 and USB cables from the connectors on motherboard.

3. Remove the compartment cover.
4. Connect the VGA cable to the VGA connector of the M9020.
5. Connect the VGA cable to the VGA device.

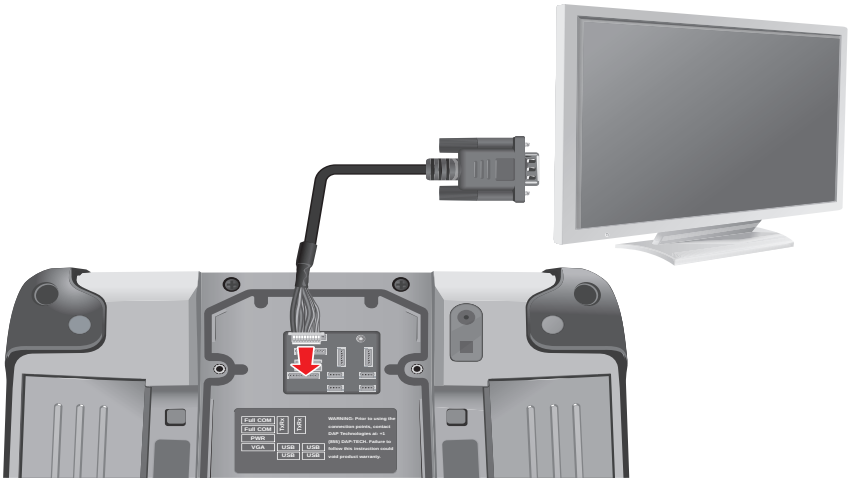

Connecting Audio Devices

Your M9020 has one combo audio connector that supports both audio in and audio out devices. You can connect speakers, headphones, or a stereo headset.

To connect an audio device, simply plug the device cable into the audio connector of your M9020.

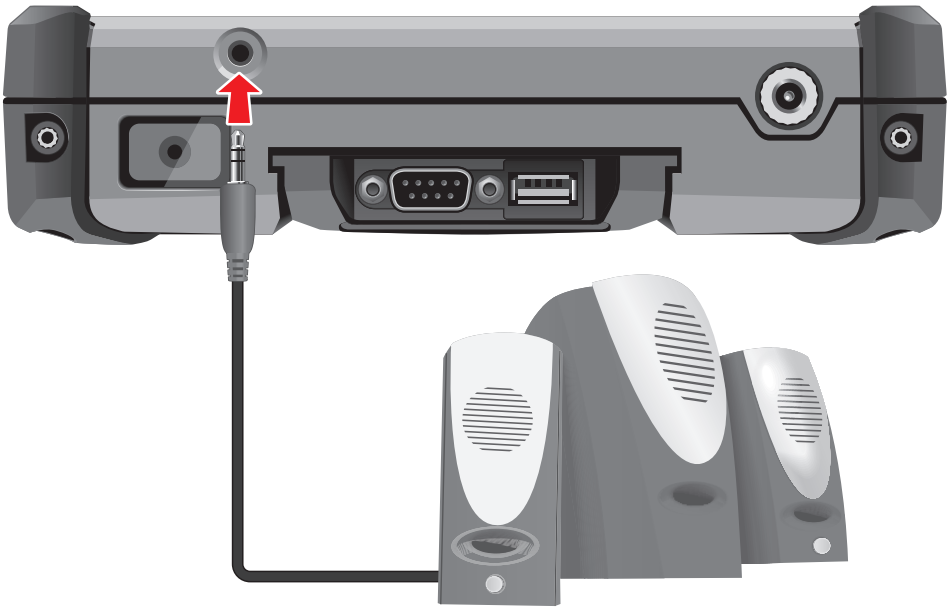

Connecting Serial Devices

Your M9020 has one RS-232 port for connecting serial devices, such as barcode scanners, printers, among others.

To connect a serial device, simply plug the device cable into the RS-232 port of your M9020. Attach the screws to secure the connection.

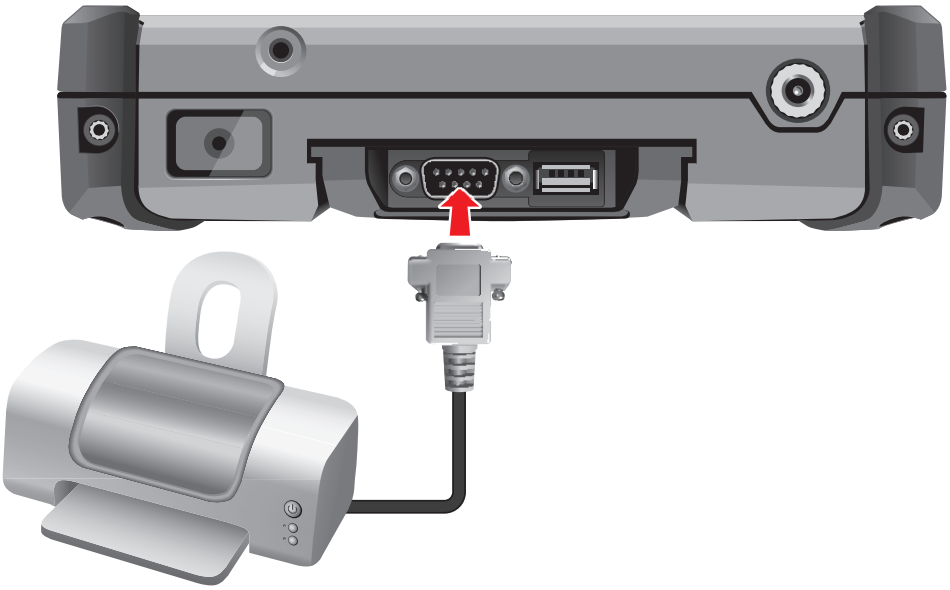

CHAPTER 4

Managing Power

Your M9020 operates either on external AC power or on battery power.

This chapter tells you how you can effectively manage power. To maintain optimal battery performance, it is important that you use the battery in the proper way.

The topics in this chapter include:

- How to charge the battery pack
- How to check the battery level
- What happens when the battery is low and what actions to take
- What is Power Management
- How to save power

Battery Pack

The operating time of a fully charged battery pack depends on how you use the device.

When you use applications that often access peripherals, or when you stay connected to a wireless network, the operating time of the battery may be shortened.

> WARNING:
> - Do not disassemble the battery pack. There are no user-serviceable parts inside. Doing so may present risk of exposure to harmful chemicals, explosion or fire.
> - Contact your local waste disposal service provider regarding the disposal or recycling of used battery packs.

Charging the Battery Pack

Perform one of the following, to charge the battery pack(s):

Via M9020

1. With the battery pack(s) installed, plug the DC cord of the AC adapter into the power connector of M9020.
2. Plug the female end of the AC power cord into the AC adapter.
3. Then plug the male end of the AC power cord into an electrical outlet.

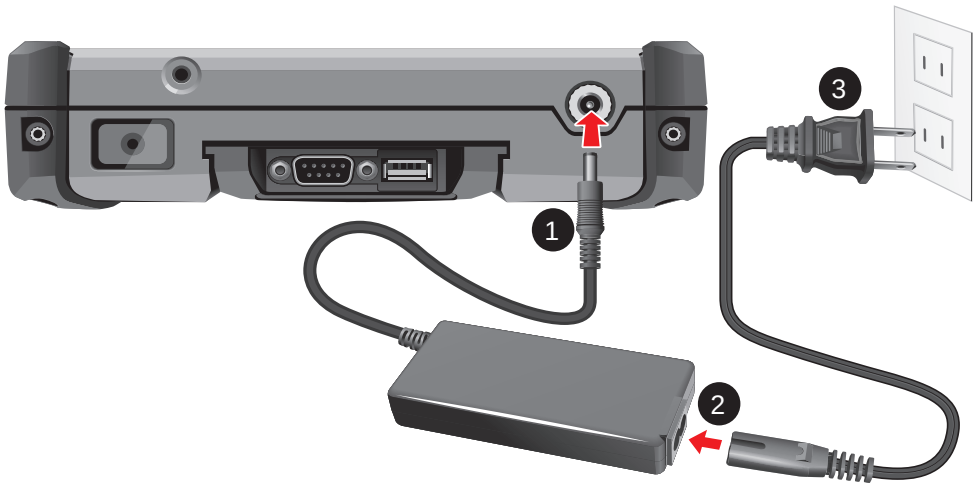

> CAUTION:
> - When you disconnect the AC adapter, disconnect from the electrical outlet first and then from M9020. A reverse procedure may damage the AC adapter or M9020.
> - When unplugging the connector, always hold the plug head. Never pull on the cord.

Via Charger (Optional)

1. From the top side of the battery pack, align and place the battery into the battery charger.
2. Press down on the battery pack.
3. Repeat the above steps to install the second battery pack if necessary.

4. Plug the DC cord of the AC adapter into the power connector of the battery charger.
5. Plug the female end of the AC power cord into the AC adapter.
6. Then plug the male end of the AC power cord into an electrical outlet.

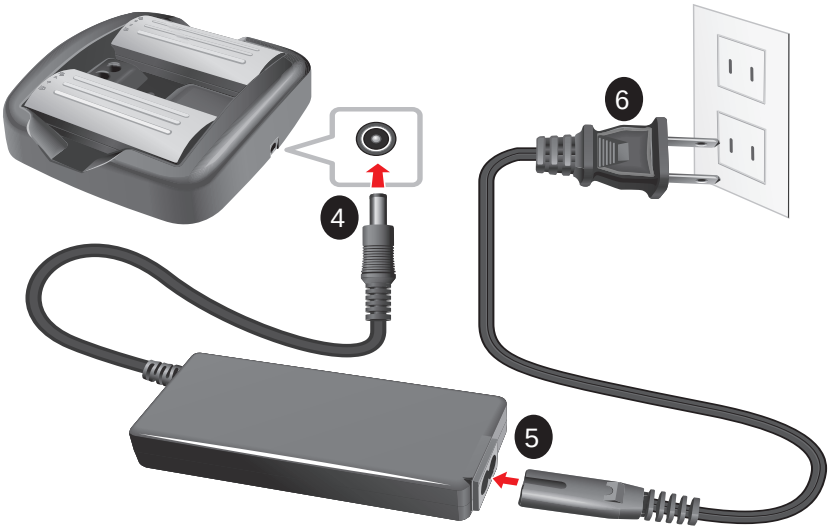

7. Wait until the LED indicator on the battery charger lights from “red” to “green”, indicating charging is finished.

NOTE:
- The additional battery pack is optional.
- The battery pack(s) are hot-swappable.

Checking the Battery Level

Tap the battery icon ( ) or ( ) on the taskbar. The window below appears.

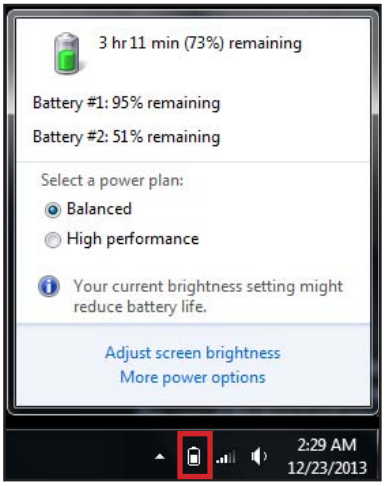

On battery power

Or

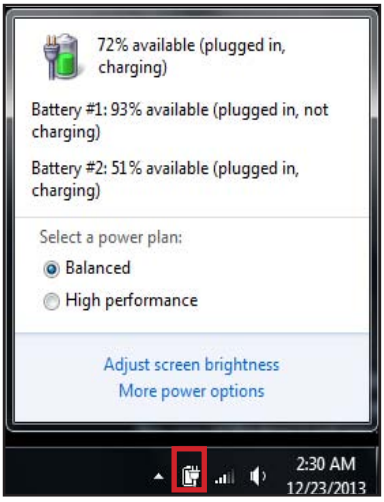

While charging the battery

> NOTE: The battery capacity indicator shows only an approximate battery level status.

Replacing the Battery Pack

If you rely on battery power for a long period of time, consider purchasing additional batteries to allow a continuous use of the device.

To replace the battery pack, perform the following:

1. Place M9020 face down on a flat even surface.
2. Rotate the lock latch to the unlock (🔓) direction, until the battery pack is released from the socket.

3. Release the battery pack from the bay and remove.

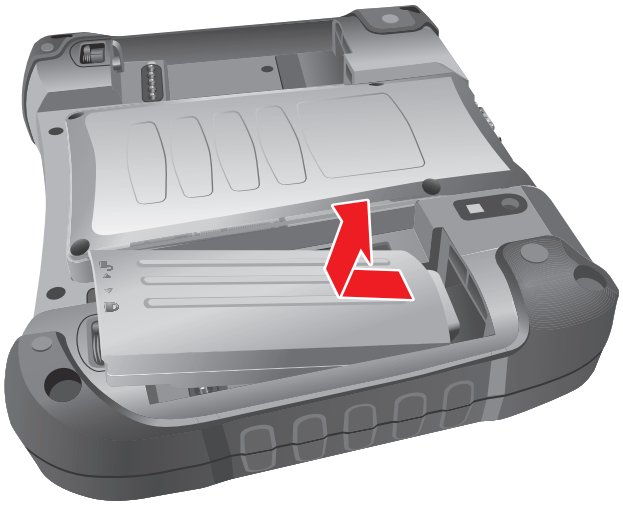

4. Install the replacement battery pack (see “Installing the Battery Pack” on page 1-17).

Power Management

The power management feature helps reduce power consumption which extends battery life.

Your M9020 supports ACPI (Advanced Configuration and Power Interface) for power management. Power supply to different components is controlled on an as-needed basis. This allows maximum power conservation and performance at the same time.

Windows comes with pre-defined Power Options (**Balanced**, **Power Saver**, and **High Performance**) for you to select. You can access Power Options by tapping **Start** > **Control Panel** > **Power Options**. By default, your M9020 is in **Balanced Mode**.

For detailed information on power management, see Windows Help.

Power Saving Tips

Here are some practical suggestions that you can do to maximize the operating time of the battery:

- Enable Power Management. Choose a power plan that saves power. A power plan is a collection of hardware and system settings that control how your M9020 manages power.
- Decrease the LCD brightness to the lowest comfortable level.
- Shorten the length of time before Windows turns off the display.
- Many USB devices use power just by being connected. If you use a USB flash drive, unplug it when you are not using it.
- Deactivate the Wireless LAN function if you are not using it.
- Deactivate Bluetooth wireless feature if you are not using it.
- Turn off M9020 when you are not using it.

CHAPTER 5

Expanding Your M9020

You can optimize the capabilities of your M9020 by using a docking station. This chapter gives guidelines on installing and using the Vehicle Dock.

Connecting the Docking Station

The Vehicle Dock, a docking station designed for use with your M9020, is available as an optional accessory.

Overview of the Vehicle Docking Station

Front View

No.	Item	Description
1	Docking Station Connector	For connection with the M9020.

Rear View

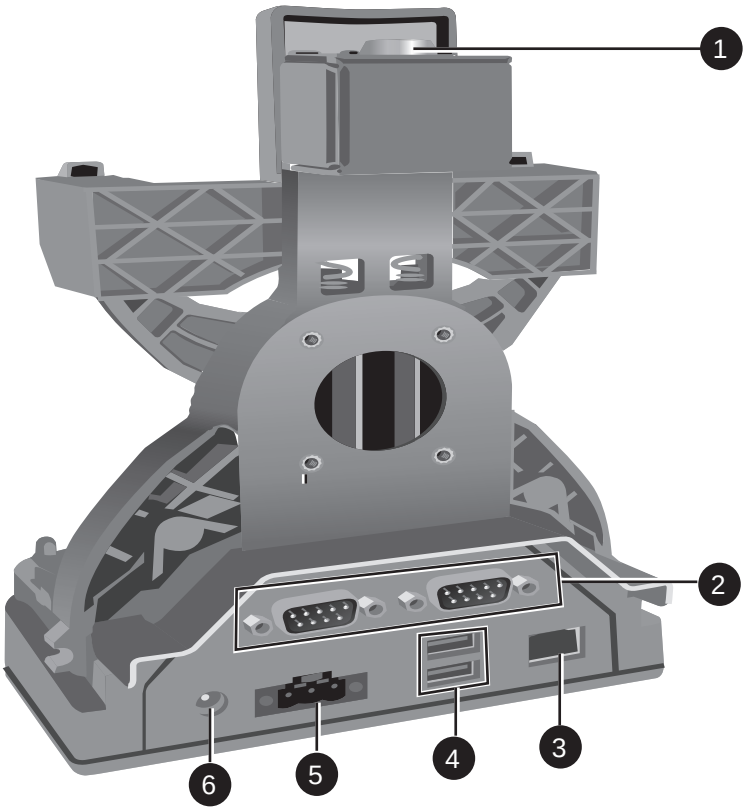

No.	Item	Description
1	Lock	Locking system to avoid the device being taken from the dock.
2	RS-232 Connectors	Connection for serial devices, for example, a scanner or a printer.
3	RJ-45 Connector	Provides connection to a LAN.
4	USB Ports	Connection for 2 x USB 2.0 compatible devices, for example, USB flash drives.
5	Bare leads DC connector	Connection for DC power supply with bare leads.
6	Power Connector	Connects to the AC adapter.

Docking the M9020

Perform the following to dock the M9020:

1. Align the golden connector and guide pin holes on your M9020 with the golden connector and guide pins on the docking station.
2. Insert M9020 into the guide pin holes on the docking station.

3. Slightly push the upper part of M9020 towards the docking station, until you hear the “click” sound, indicating that the device is fixed to the docking station.

Un-docking the M9020

Perform the following to un-dock the M9020:

While holding the M9020, press the release latch on the docking station and then lift the device to un-dock it.

Connecting the Docking Station

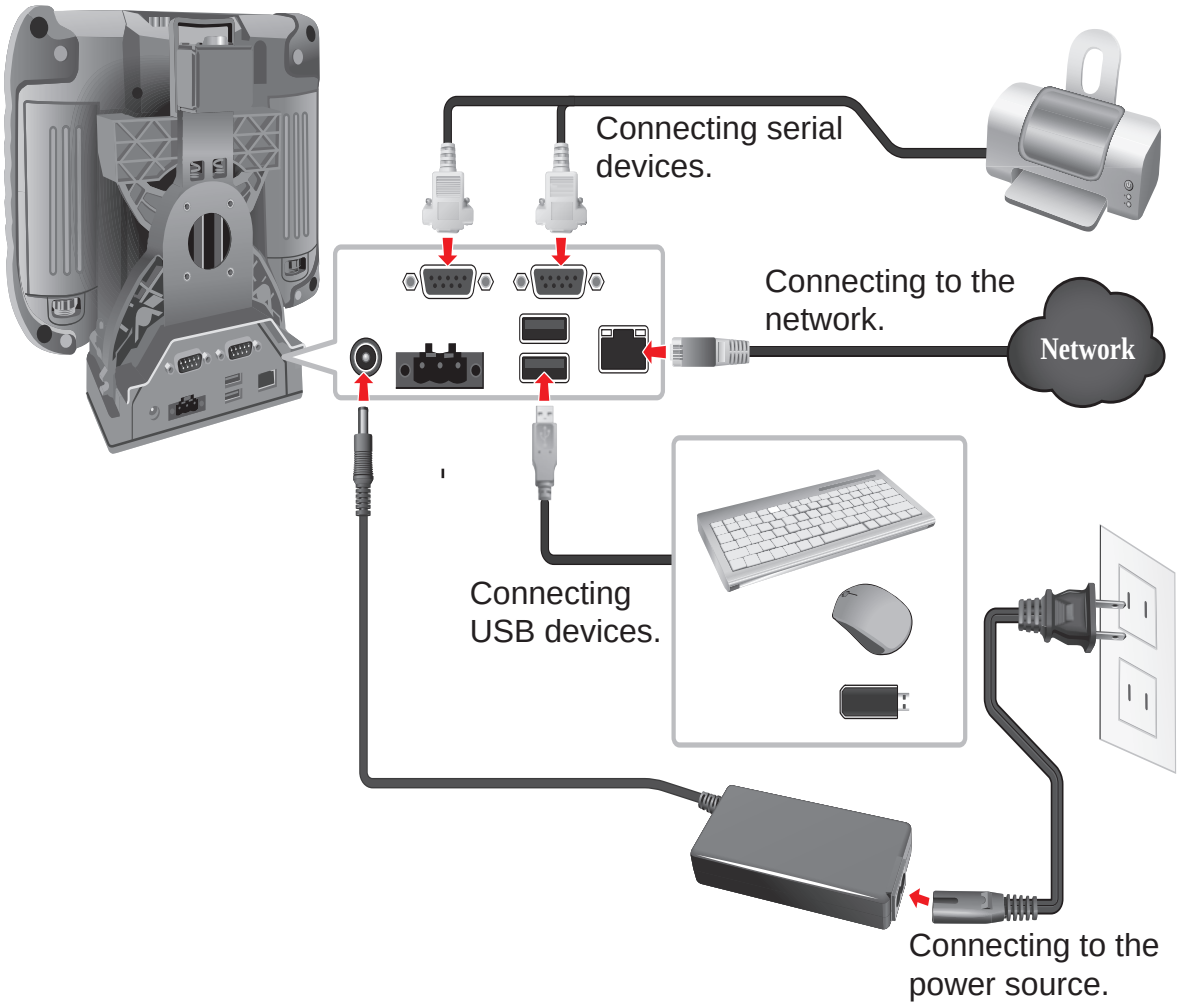

APPENDIX A

Maintenance, Troubleshooting and Specifications

This chapter covers the following topics:

- How to care for your M9020
- Troubleshoot your M9020
- M9020 Specifications

Taking Care of Your M9020

Location Guidelines

- Keep the M9020 at least 13 cm (5 inches) away from electrical appliances that can generate a strong magnetic field such as a TV, refrigerator, motor, or a large audio speaker.

General Guidelines

- Do not place heavy objects on top of the device as this may damage the display.
- To maximize the life of the backlight in the display, allow the backlight to automatically turn off as a result of power management. Avoid using a screen saver or other software that prevents the power management from working.

Cleaning Guidelines

- Use a soft cloth moistened with water or a non-alkaline detergent to wipe the exterior of the M9020.
- Gently wipe the display with a soft, lint-free cloth. Do not use alcohol or detergent on the display.

Touchscreen Guidelines

- Use your finger or the included stylus on the display. Using a sharp or metallic object may cause scratches and damage the display, thereby causing errors.
- Use a soft cloth to remove dirt on the display. The touchscreen surface has a special protective coating that prevents dirt from sticking to it. Not using a soft cloth may cause damage to the special protective coating on the touchscreen surface. To clean off hard to remove dirt, blow some steam on the particular area and gently wipe away using a soft cloth.
- Do not use excessive force on the display. Avoid placing objects on top of the display as this may cause the glass to break.

When there is a noticeable discrepancy in the operation of the touchscreen function (stylus touch does not correlate to the proper location on the screen), recalibrate the touchscreen display (see “Calibrating the Screen” on page 2-3).

Troubleshooting

If you encounter problems when using the M9020, try the following troubleshooting tips first to detect and solve the problem. If the problem persists, contact customer support.

Problem	Solution
The battery is not charging.	• Make sure the AC adapter is properly connected.
Nothing appears on the screen.	• The device may be in sleep mode. Press the power button to wake up the display. • The brightness level may be too low. Increase brightness (see “Special Function Keys” on page 2-5).
The screen suddenly turns blank and the power indicator goes off.	• Make sure the AC adapter is properly connected. • If using a battery pack, the battery pack may be depleted, replace or charge the battery.
I cannot use the wireless LAN feature.	• Make sure that wireless LAN feature is turned on.
Wireless LAN signal quality is poor.	• The M9020 may be out of range. Move the device closer to the access point or another wireless LAN device associated with it. • Check if your surroundings have interferences, such as microwave ovens or cordless phones. Move the device away from objects causing interference.
I cannot connect to another wireless LAN device.	• Make sure that the wireless LAN feature is turned on. • Make sure that the SSID setting is the same for every wireless LAN device in the network. • Restart the M9020. • Make sure the IP address or subnet mask setting is correct.
I cannot connect to another device with Bluetooth.	• Make sure that both devices have Bluetooth turned on. • Make sure that the distance between the two devices is within 10 meters and there are no walls or large obstructions between the devices. • Make sure that both devices are turned on and are configured to be discoverable. • Make sure that both devices are compatible.

Problem	Solution
The GPS application cannot find my location.	• Make sure that GPS is turned on. • Make sure that the GPS receiver and the location sensor are enabled in Control Panel. • The device may be out of coverage area. Move your M9020 outdoors or closer to a window. • The device may be out of coverage area. Move your M9020 outdoors or closer to a window.
No sound is produced.	• Make sure the volume is not muted. • If using an external audio device, make sure that the cable is properly connected.
I cannot project the M9020 display to another monitor.	• Make sure the VGA cable is connected correctly. • Make sure the output setting selected is correct.
Devices connected through the Vehicle Dock are not working.	• Make sure the Vehicle Dock is connected to an electrical outlet. • Make sure the cables are properly connected.

M9020 Specifications

Technical Specifications	
Operating System	• Windows® 7 Professional • (optional Windows® Embedded Standard 7
Processor	Intel® N2600 Dual Core 1.6 GHz
Memory	4GB DDR3
Display	• Sunlight-viewable • Glass-on-glass resistive touchscreen • Landscape or portrait orientation • Passive stylus or finger operation • 7-inch (1024 × 600)
Camera	• 5.0 MP rear camera with auto-focus and flash • 2.0 MP front camera
Storage	64 to 256 GB solid state drive
Connectivity	• WLAN: Summit 802.11 a/b/g/n • WWAN: Gobi™ 5000 4G LTE • GPS: » u-blox 6 position hybrid GSP/SBAS engine (WASS, EGNOS, MSAS) » A-GPS: AssistNow online and AssistNow offline services, OMA SUPL compliant • Bluetooth® V4.0+EDR • RFID antenna: Integrated, linearly polarized • RFID standards supported: » UHF - EPCglobal Gen 2 with DRM » AEI - eGo, SeGo, ATA, Allegro/Title-21, Gen2 • RFID frequency range: » UHF - EU: 865-868MHz; US: 902-928MHz » AEI - 865-868MHz, 902-928MHz
LED Status Indicator	Battery Full / Charging / Low / Power On
Keypad & Buttons	• Qwerty keypad • 5 programmable function keys • Dedicated scanner and camera buttons
Input/Output	Physical: • Power jack • 1× USB 2.0 • 1× RS-232 Via dock connector: • 1× USB 2.0 • 1× Ethernet 10/100 • 1× power 10-24v DC

Technical Specifications	
Expansion Slot	• Micro SD card slot (up to 32 GB) • 4 × USB 2.0 • 1 × power output 5V 2A • 1 × SVGA • 4 × RS-232
Barcode Scanning / Data Capture	• Short range barcode: 1D/2D barcode scanner • Camera: » 5.0 MP rear camera with auto-focus and flash » 2.0 MP front camera
Audio	• Intel® HD Audio • Speaker 1.3 watt • Stereo headset jack
Battery	2x External batteries: • Li-ion battery pack, 7.4 V, 3100 mAh (hot-swappable) Input: • 10-20 VDC, 2A
AC Adapter	AC 100 ~ 240V, 50 ~ 60Hz, DC 12V input
Regulatory	• FCC Class B • CE • RoHS • WEEE • ANSI/ISA 12.12.01, Nonincendive Electrical Equipment for use in Class I and II, Division 2 and Class III, Divisions 1 and 2 Hazardous (Classified) Locations; CAN/CSA C22.2 No. 213-M1987, Non-incendive Electrical Equipment for Use in Class I, Division 2 Hazardous Locations • Lacer safety: » A21CFR1040.10 » IEC/EN 60825-1

Physical Specifications	
Dimensions	• 9.0 (L) × 7.3 (W) × 2.0 (H) inches • 230 (L) × 185 (W) × 51 (H) mm
Weight	• 2.5 lb. • 1334 g

Environmental Specifications	
Operating Temperature	-22 to +122 °F [-30 to +50 °C]
Charging Temperature	14 to +122 °F [-10 to +50 °C]
Storage Temperature	-22 to +158 °F [-30 to +70 °C]
Drop	Multiple 6-foot (1.8-meter) drops to concrete
ESD	15 kV air discharge, 8 kV direct discharge
Sealing	IP67 certified
Humidity	5%-95%, non-condensing
Vibration	MIL-STD-810F

NOTE: Specifications are subject to change without notice.

APPENDIX B

Regulatory Information

This appendix provides regulatory statements and safety notices about your M9020.

> NOTE: Marking labels located on the exterior of your M9020 indicate the regulations that your model complies with. Check the marking labels and refer to the corresponding statements in this appendix. Some notices apply to specific models only.

Important Information

ATTENTION: Pour réduire le risque d'incendie ou de choc électrique ne pas exposer l'appareil à la pluie ou à l'humidité. VERIFIER que le cordon électrique est la prise murale pour un delai d'inactivite prolongé. Pour arrêter complètement l'alimentation de l'appareil, débranchez le cordon d'alimentation de la prise AC. N'enlever ni le capot arrière ni les pièces internes de l'appareil. Contactez un personnel qualifié si nécessaire.

SA1965

AVERTISSEMENT ÉLECTRIQUE
Utilisé pour les instructions destinés à alerter l'utilisateur d'un CHOC ÉLECTRIQUE mortel ou de blessure grave en cas d'utilisation incorrecte de l'unité.

SA1966

AVERTISSEMENT
Utilisé pour les instructions destinés à alerter l'utilisateur d'un risque mortel ou de blessure grave en cas d'utilisation incorrecte de l'unité.

ATTENTION: Pour réduire le risque d'incendie ou de choc electrique ne pas exposer l'appareil à la pluie ou à l'humidité FAIRE le cordon électrique est DÉBRANCHÉ DE LA PRISE MURALE DANS UN DELAI DE PROLONGER INACTIVITÉ. De se désengager totalement LE POUVOIR DE L'UNITE, S'IL VOUS PLAÎT DEBRANCHER LE CORDON D'ALIMENTATION DE LA PRISE AC. NE PAS Romove le capot arrière, pas de PIÈCES À L'INTÉRIEUR. Contactez un personnel qualifié S'il faut le réparer.

SA1965

ELECTRIQUE AVERTISSEMENT
Sert aux instructions destin es alerter l'utilisateur d'un CHOC ÉLECTRIQUE mortel ou de blessure grave en cas d'utilisation incorrecte de l'unit.

SA1966

AVERTISSEMENT
Sert aux instructions destin es alerter l'utilisateur d'un risque mortel ou de blessure grave en cas d'utilisation incorrecte de l'unit .

Safety Information (EN)

Follow and adhere to all warnings and instructions on the screen. For your safety, please read all safety and operating instructions before using the M9020. Keep this manual for future reference.

1. Carefully read all recommendations and precautions for use before using this product.
2. Retain all recommendations and precautions for future reference as necessary.
3. Read and be sure to understand all warnings listed in the precautions.
4. Follow all operating precautions when using this product.
5. Use only a dry cloth to clean this product.
6. Do not place the product near any heat sources such as radiators, warm air intakes, stoves or other heat-generating devices (including amplifiers or other heat producing equipment).
7. Do not disregard the safety that a polarized or grounded connection can provide. A polarized connection consists of two plugs, one of which is larger than the other. A grounded connection has two blades and a third one that is grounded. If the main plug provided cannot be inserted into your outlet, consult an electrician to replace your obsolete outlet.
8. Protect the power cord from being crushed or pinched, particularly in the area of the plugs, any receptacles used, and the point of exit from the apparatus. Do not break off the ground pin of the power cord.
9. Use only accessories specified by the manufacturer.
10. Use only with accessories specified by the manufacturer or sold with the product.

11. Unplug this apparatus during lightning storms or when it is not being used for long periods.
12. Refer all servicing to qualified service personnel. A technical intervention is required when the apparatus has been damaged in any way or does not operate normally.

Informations de sécurité (FR)

Suivez et respectez tous les avertissements et instructions figurant sur l'écran. Pour votre sécurité, s'il vous plaît lire toutes les consignes de sécurité et de fonctionnement avant d'utiliser le M9020. Gardez ce manuel pour référence future.

1. Lire avec attention toutes les recommandations et precautions d'emploi avant d'utiliser ce produit.
2. Veuillez conserver ces recommandations et précautions pour référence future.
3. Lire et comprendre tous les avertissements énumérés dans les précautions d'emploi.
4. Suivre toutes les précautions d'emploi pour utiliser ce produit.
5. Utiliser exclusivement un chiffon sec pour nettoyer ce produit.
6. Ne pas placer le produit près de toute source de chaeur telle que radiateurs, arrivées d'air chaud, fourneaux ou autres appareils générant de la chaleur (incluant les amplificateurs producteurs de chaleur) .
7. Ne pas négliger la sécurité que procure un branchement polarisé ou avec raccordement à la terre, Un branchement polarisé comprend deux fiches dont l'une est plus large que l'autre. Un branchement à la terre comprend deux fiches plus une troisième reliée à la terre. Si la fiche secteur fournie ne s'insert pas dans votre prise de courant. consulter un 'électricien afin de remplacer votre prise obsolète.
8. Protéger le cordon d'alimentation de tout écrasement ou pincement, particulièrement au niveau des fiches, des réceptacles utilisés et à l'endroit de sortie de l'appareil. Ne pas casser la fiche de terre du cordon d'alimentation.
9. Utiliser uniquement les accessoires spécifiés par le constructeur.
10. Utilisez seulement des accessoires spécifiés par le manufacturier ou vendus avec le produit.
11. Débrancher cet appareil lors d'orages ou s'il n'est pas utilize pendant une longue période.
12. Faire exécuter le service par du personnel qualifié. Une intervention technique est requise lorsque l'appareil a été endommagé ou n'opère pas normalement.

About the Batteries

Nordic Lithium Cautions (for lithium-ion batteries)

CAUTION!
Danger of explosion if battery is incorrectly replaced. Replace only with the same or equivalent type recommended by the manufacturer. Dispose of used batteries according to the manufacturer's instructions. (English)

ATTENTION!
Il y a danger d'explosion s'il y a remplacement incorrect de la batterie. Remplacer uniquement avec une batterie du mêre type ou d'un type équivalent recommandé par le constructeur. Mettre au rebut les batteries usagées conformément aux instructions du fabricant. (French)

About the Adapter

- Use only the supplied AC adapter (Rating: Input DC 15V, 2.4A). Use of another type of AC adapter will result in malfunction and/or danger.
- Do not use the adapter in a high moisture environment. Never touch the adapter when your hands or feet are wet.
- Allow adequate ventilation around the adapter when using it to operate the device or charge the battery. Do not cover the AC adapter with paper or other objects that will reduce cooling. Do not use the AC adapter while it is inside a carrying case.
- Connect the adapter to a proper power source. The voltage requirements are found on the product case and/or packaging.
- Do not use the adapter if the cord becomes damaged.
- Do not attempt to service the unit. There are no serviceable parts inside. Replace the unit if it is damaged or exposed to excess moisture.

FCC Regulations

This device complies with part 15 of the FCC Rules. Operation is subject to the following two conditions: (1) This device may not cause harmful interference, and (2) this device must accept any interference received, including interference that may cause undesired operation.

This device has been tested and found to comply with the limits for a Class B digital device, pursuant to Part 15 of the FCC Rules. These limits are designed to provide reasonable protection against harmful interference in a residential installation. This equipment generates, uses and can radiate radio frequency energy and, if not installed and used in accordance with the instructions, may cause harmful interference to radio communications. However, there is no guarantee that interference will not occur in a particular installation. If this equipment does cause harmful interference to radio or television reception, which can be determined by turning the equipment off and on, the user is encouraged to try to correct the interference by one or more of the following measures:

- Reorient or relocate the receiving antenna.
- Increase the separation between the equipment and receiver.
- Connect the equipment into an outlet on a circuit different from that to which the receiver is connected.
- Consult the dealer or an experienced radio/TV technician for help.

Changes or modifications not expressly approved by the party responsible for compliance could void the user‘s authority to operate the equipment.

Operation on the 5.15-5.25GHz frequency band is restricted to indoor use only. The FCC requires indoor use for the 5.15-5.25GHz band to reduce the potential for harmful interference to co-channel Mobile Satellite Systems. Therefore, it will only transmit on the 5.25-5.35 GHz, 5.47-5.725 GHz and 5.725 –5.850 GHz band when associated with an access point (AP).

ANSI/ISA 12.12.01-2013

Nonincendive Electrical Equipment for use in Class I and II, Division 2 and Class III, Divisions 1 and 2 Hazardous (Classified) Locations.

CAN/CSA C22.2 No. 213-M1987

Non-incendive Electrical Equipment for Use in Class I, Division 2 Hazardous Locations.

CE Notice (European Union)

This device has been tested and found to conform with the limits set for a Class B product.

- EN 55022 — “Limits and Methods of Measurement of Radio Interference Characteristics of Information Technology Equipment”
- EN 55024 — “Information technology equipment - Immunity characteristics - Limits and methods of measurement”
- EN 61000-3-2 — “Electromagnetic compatibility (EMC) - Part 3: Limits - Section 2”
- EN 61000-3-3 — “Electromagnetic compatibility (EMC) - Part 3: Limits - Section 3”
- EN 60950 — “Safety of Information Technology Equipment.”
- EN 55022 Emissions requirements

RF Exposure Information (SAR)

This device is compliance with SAR for general population /uncontrolled exposure limits in ANSI/IEEE C95.1-1999 and had been tested in accordance with the measurement methods and procedures specified in OET Bulletin 65 Supplement C.

This equipment complies with FCC RF radiation exposure limits set forth for an uncontrolled environment. This device was tested for operations with the device contacted directly to the human body to the back side of the EUT. To maintain compliance with FCC RF exposure compliance requirements, avoid direct contact to the transmitted antenna during transmitting.

IC Regulations

This device complies with Industry Canada license-exempt RSS standard(s). Operation is subject to the following two conditions:

(1) this device may not cause interference, and

(2) this device must accept any interference, including interference that may cause undesired operation of the device.

Le présent appareil est conforme aux CNR d'Industrie Canada applicables aux appareils radio exempts de licence. L'exploitation est autorisée aux deux conditions suivantes:

(1) l'appareil ne doit pas produire de brouillage, et

(2) l'utilisateur de l'appareil doit accepter tout brouillage radioélectrique subi, même si le brouillage est susceptible d'en compromettre le fonctionnement."

This Class B digital apparatus complies with Canadian ICES-003

Cet appareil numérique de la classe B est conforme à la norme NMB-003 du Canada.

The device could automatically discontinue transmission in case of absence of information to transmit, or operational failure. Note that this is not intended to prohibit transmission of control or signaling information or the use of repetitive codes where required by the technology.

The device for the band 5150-5250 MHz is only for indoor usage to reduce potential for harmful interference to co-channel mobile satellite systems; the maximum antenna gain permitted (for devices in the bands 5250-5350 MHz and 5470-5725 MHz) to comply with the e.i.r.p. limit; and The maximum antenna gain permitted (for devices in the band 5725-5850 MHz) to comply with the e.i.r.p. limits specified for point-to-point and non point-to-point operation as appropriate, as stated in section A9.2(3). In addition, High-power radars are allocated as primary users (meaning they have priority) of the band 5250-5350 MHz and this radar could cause interference and/or damage to LE-LAN devices.

The County Code Selection feature is disabled for products marketed in the US/ Canada. For product available in the USA/ Canada markets, only channel 1~11 can be operated. Selection of other channels is not possible.

Important Note

IC Radiation Exposure Statement

This EUT is compliance with SAR for general population/uncontrolled exposure limits in IC RSS-102 and had been tested in accordance with the measurement methods and procedures specified in IEEE 1528.

Toll Free : +1 (855) DAP-TECH (327-8324)
www.daptech.com

United States
8945 South Harl Avenue, Suite 112
Tempe, Arizona, 85283 USA
Phone: +1 (855) DAP-TECH

2915 Premiere Parkway, Suite 300
Duluth, Georgia 30097, USA
Phone: +1 (855) DAP-TECH

Canada
4535 Wilfrid Hamel Blvd., Suite 100
Quebec City, QC Canada G1P 2J7
Toll Free: +1 (800) 363-1993
Phone: +1 (418) 681-9394
Fax: +1 (418) 681-0799

Europe, Middle East, Africa
9 The Chambers, Vineyard
Abingdon UK OX14 3PX
Phone: +44 (0) 1235 462130
Fax: +44 (0) 1235 462131

PN: XXXX-XXXXXXX • March 2014