Remote Control

Model 54.0

Quick Start Guide

dish
TUNED IN TO YOU™

Turn On Your Remote

1 Remove the back cover by pushing the tab upward, and remove the *PULL* tab

2 Replace the back cover

3 Open the front panel of your DISH receiver, and press the *SYS INFO* button

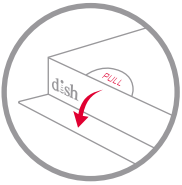

4 Press the *SAT* button on the side of the remote control

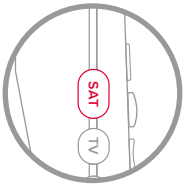

You will hear three beeps from the remote control, indicating it has paired with your DISH receiver

Pair Your Remote

1 Press the home button twice

2 Select *Settings* and then *Remote Control*

3 Select *TV* and then *TV Pairing Wizard*

4 Follow the prompts

5 You can also pair your remote with an *Auxiliary Device* such as a Blu-ray™ player or stereo

Activate Backlighting

To activate the backlighting on your remote control, simply pick it up, move it, or shake it gently in a dark room.

It's that easy!

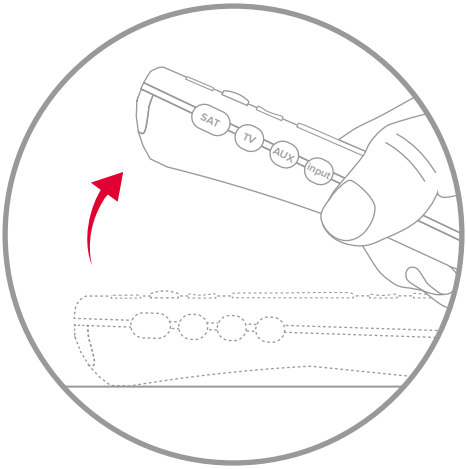

To conserve your remote control's battery life, a light sensor detects the amount of light in the room. If the room is sufficiently dark, backlighting will turn on, allowing you to see the remote's buttons.

Explore Your Remote

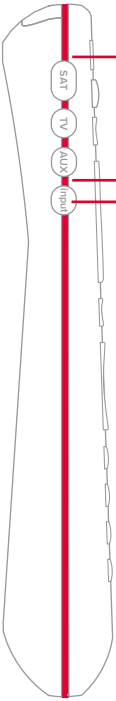

Device Buttons
Use your remote as a universal remote control by pairing it with your TV and an auxiliary device such as a Blu-ray™ player or stereo

Input
Change inputs on your TV when in TV mode

When in SAT mode, use this button to swap picture-in-picture or multi-view windows

Explore Your Remote

Home
Easily find movies, sports, and shows that are live, on your DVR, or on demand—all in one place

Power
Turn your TV, DISH receiver, and other selected devices on and off

Options
Access additional options and features in the current menu

Back/Live TV
Press to go back one menu

Press and hold to go to live TV

Skip Backward
Press to skip back 10 seconds

Press and hold to rewind

Recall
While watching TV, press to see the channels you have watched recently

Diamond Button
Customize this button to turn closed captioning on and off, launch Netflix®, turn on picture in picture, and more

See *Personalize Your Remote* in this guide

Microphone
Listens to you when you are using voice control

Light Sensor
Extends battery life by determining whether backlighting should be activated when you pick up the remote

Voice Control
Find what you're looking for by pressing and holding this button, speaking into the microphone, and releasing it

Info/Help
Press to get more information about a program

Press and hold to get quick tips in most menus

Skip Forward
Press to skip forward 30 seconds

Press and hold to fast-forward

Channel Up & Down
In addition to changing channels, use these buttons to page through menus such as the *Guide*

Double-Diamond Button
You can personalize this button too!

Take Control with Your Voice

1 Press and hold the voice button

2 Say the name of a movie, TV show, sport, sports team, actor, collection, or feature

3 Release the voice button

4 Try other examples such as

"Watch ESPN"
"Big Bang Theory"
"Batman movies"
"Action movies with Matt Damon"
"Launch Game Finder"
"Denver Broncos"
"Closed captioning on"
"Text to speech on"

Personalize Your Remote

1 Press and hold the diamond or double-diamond button

or

2 Select from the menu what you want the button to do

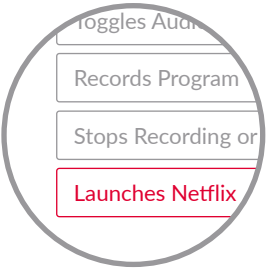

You can turn closed captioning on and off, launch Netflix®, turn on picture in picture (PiP), record a program with one click, and more

3 Select *OK*

That's it!

Locate Your Remote Anytime

1 Open the front panel of your DISH receiver

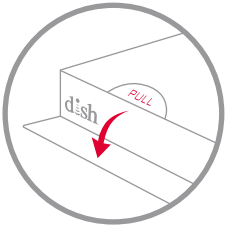

2 Press the *LOCATE REMOTE* button

You will hear a series of beeps from your remote, allowing you to find it.

It's that simple!

Regulatory Information

This device complies with Part 15 of FCC Rules. Operation is subject to the following two conditions:

1. This device may not cause harmful interference,

   and

2. This device must accept any interference received, including interference that may cause undesired operation.

This equipment has been tested and found to comply with the limits for a Class B digital device, pursuant to Part 15 of the FCC Rules. These limits are designed to provide protection against harmful interference in a residential installation. This equipment generates, uses, and can radiate radio frequency energy and, if not installed and used in accordance with the instructions, may cause harmful interference to radio communications. However, there is no guarantee that interference will not occur in a particular installation. If this equipment does cause harmful interference to radio or television reception, which can be determined by turning the equipment off and on, the user is encouraged to try to correct the interference by following one or more of the following measures:

- Reorient or relocate the receiving antenna.
- Increase the separation between the equipment and receiver.
- Connect the equipment into an outlet on a circuit different from that to which the receiver is connected.
- Consult the dealer or an experienced radio/TV technician for help.

Changes or modifications to this device may void your authority to operate this equipment.

Safety Instructions

You must keep safety in mind while using this device. Keep these and any other instructions for future reference.

Observe Warnings: Carefully follow all warnings on the device and in the operating instructions.

Heat: Do NOT place the device near heat sources such as radiators, stoves, heat registers, or other appliances that produce heat.

Case and Use

Cleaning: Do NOT use liquid, abrasive, solvent, or aerosol cleaners. Use a damp cloth for cleaning.

When Not in Use: Remove the batteries if this device is to be left unattended or unused for a long period of time.

Refer servicing to qualified personnel when a solid object or liquid has fallen onto or into the device.

Do NOT attempt to service this device. Refer all servicing to qualified personnel. Opening covers other than the battery cover will void the warranty.

Need Help?

Press and hold *Info/Help*

Channel 103

The Hopper Features Guide

mydish.com/support/remotes

TUNED IN TO YOU™

Warranty, safety, regulatory, and legal information
can be found at mydish.com/support/remotes

DN009048