Service Manual

JuniorGuard series

Rev. March/03

Table of contents:

1. Overview of the 8.2 MHz systems
2. Factors to be considered during installation
3. Parameters of Juniorguard
4. The transmitter board (TX) and its settings
5. Overview of the receiver board (RX) and the test box, possible settings
6. Examples of complete systems
7. Addendum
8. Recommended tools
9. FCC

1.Overview of 8.2 MHz systems

The transmitter of the radio frequency system emits frequency modulated (generally with ±10% frequency deviation) radio signal with 8.2 MHz carrier. The security labels (tags) include LC resonator circuits tuned to a particular frequency (8.2 MHz ±5%). In the field radiated by the antenna they generate a signal clearly detectable by the receiver. The receiver analyses this signal in several cycles and based on a well-defined algorithm, according to different criteria – supposed that the signal shows the attributes of a real label – and gives an alarm. This alarm is generally an audible and visible signal, but the relay outputs are capable of driving other external devices, too. In the system developed by Shopguard we use microprocessor control, digital signal processing and correlation filters, therefore, signal detection is extremely reliable and the number of false alarms is minimal. The system handles the complete range of available tags: hard tags (drop-shaped and circular) with prints defined by the customer, guard frames for goods (safers) with wire loops (swinging coil with a single winding) or paper labels that fit for CDs, double CDs, DVDs, MCs, VIDEOs and GAMEBOY modules, as well as paper labels that can or can not be deactivated. The deactivator device for paper labels can be integrated into the system; removers for hard tags and opener for savers are also available.

2. In this section we list the circumstances that can disturb the system's proper operation.

- The distance from electronic cash registers, and computer displays (and from other digitally operated equipment) should be at least 70-75 cm,
- Cables carrying pulse signals (e.g. cables connecting the keyboard to the alarm centre, cables connecting to regulators of air condition systems) should run at least ~70 cm from the antenna,
- Cables of power line equipment (230 V / 400 V) may not run in parallel (vertically) with the antenna body within ~1.5 m,
- Power cables should not run in the basement between the antennas,
- The distance between metallic objects, mirrors and the antenna should be at least 30-40 cm,
- Moving grids, shades, automatic doors may not be placed within ~0.5 m (1m is recommended),
- At switch-on (and permanently in case of faulty ignition circuit), high voltage advertising lights and any kind of gas-discharge tubes (e.g. halides lamps) produce a noise with many harmonics that reduces the system's operability,
- In order to avoid mutual disturbances, the nearby goods EAS (Electronic Article Surveillance) systems must be synchronized,
- No labels should be placed near-by the power cable,
- No labels should be placed beside the antennas, within a range of 1.5 – 2 x the response distance,
- If possible, the antennas should not be placed beside metallic or metal bearing columns,
- The RX (receiver) antenna must be placed far away from the noise sources.

3.Parameters of Juniorguard

It's a very attractive styling antenna. It's available in black, chrome, antique silver and wood variant.

Available detection distances:

TAGS:	DISTANCES:
40x40 mm paper	130 cm
Mini hard tag	160 cm
Round hard tag	160 cm

The necessary settings:

	TX	**RX**
Impedance	JP 10, 11 at 3	-
Tuning capacitor	JP 12, 13 at 1	JP 9 at 1
Damping resistor	It's in inside of antenna	It's in inside of antenna

The main characteristic parameters of the system:

Height:	1.68 m / 5.51 feet
Width:	0.33 m / 1.08 feet
Depth:	0,09 m / 0.29 feet
Weight:	8 kg
Material:	Chromium or colour steel tube
Power:	220-240 VAC @ 50 Hz (EU) 110-120 VAC @ 60 Hz (US)

DETECTION PATTERNS FOR JUNIOR SYSTEMS BY 4X4 STICKERLABELS

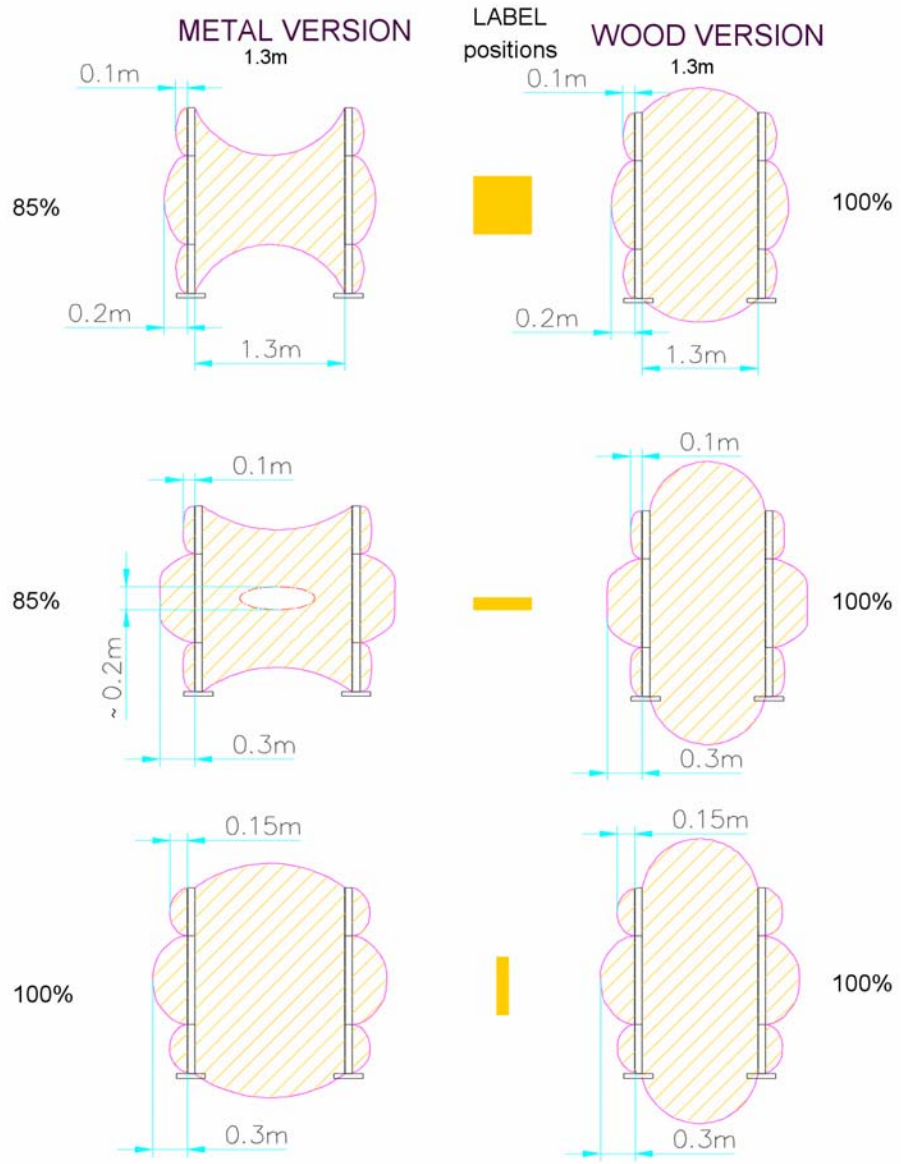

These parameters are guaranteed if there is no metal object close to the antennas !

4. The transmitter board (TX) and its settings

4.1. Schematic diagram of the transmitter board:

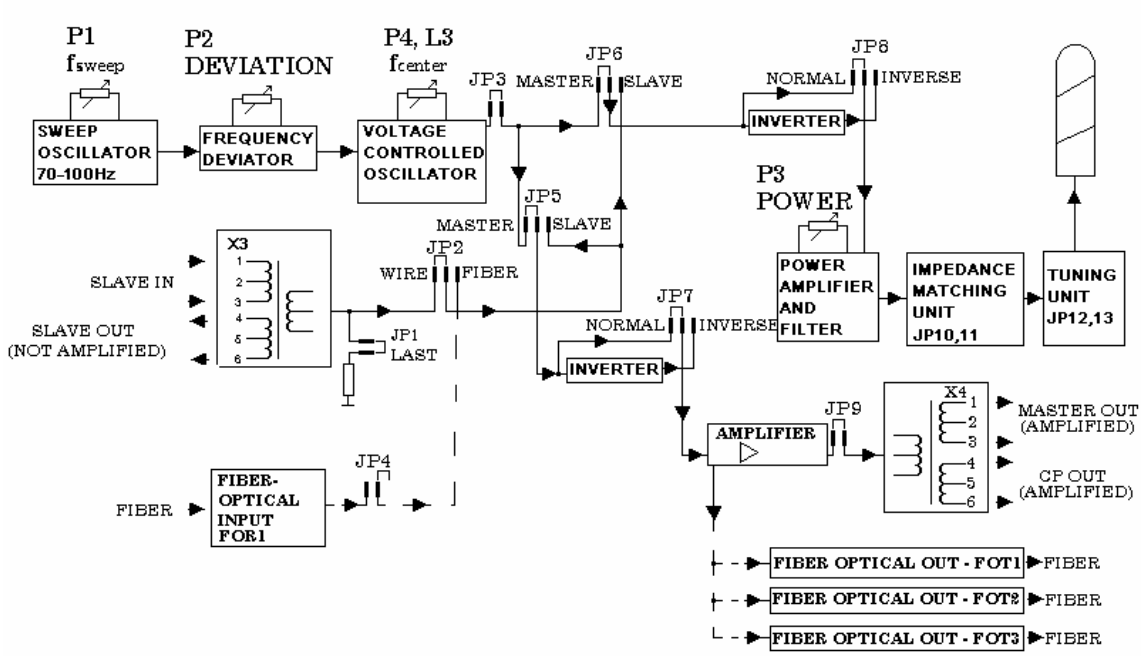

The above figure shows the schematic diagram of the transmitter circuit. Functions of the individual blocks are:

Sweep oscillator:

Provides the approx. 82 Hz modulation frequency for VCO.

Voltage controlled oscillator (VCO):

This is a voltage-controlled oscillator with 8.2 MHz output frequency. This output frequency is frequency modulated by the sweep generator. The frequency deviation is generally ±10 %.

Slave inputs:

If the antenna operates as a slave, we drive the power amplifier with the signal of a master transmitter. The connection can be established with cables. We use this solution with few antennas only, because it may collect and forward noises and it may cause unwanted couplings that may make impossible to operate larger systems. In larger systems (in case of certain bad environmental conditions even with 2 antennas) we use optical connections, because they are insusceptible for external electric disturbances, do not cause couplings but they are expensive, need special tools and knowledge. ***Optical interfaces are optional!*** The optical input is FOR1.

Phase inverter circuits:

In case of several transmitter antennas, inversion of the antenna signal phase may be needed, because the antenna signals block out each other in counter phase.

Slave outputs:

If we operate the board in slave mode and use cable connections, then the next board should be connected to the slave output (better if you use the Master out or CP out for synchronising because it's amplified), and at the last member of the chain, the termination resistance should be connected by using JP1. In case of optical connection, one board should provide max.3 outputs (FOT1…3) operating in both master and slave modes.

Master + CP output:

In master mode, this output can drive the slave input of the next transmitter through wire connection. It operates also in slave mode; in this case it outputs the amplified signal of the previous transmitter. The Master out and CP out are the same.

FET power amplifier Low-pass filter:

It provides the output signal for the antenna. In order to dissipate the lowest possible heat, it operates in switching mode. The output power level can be set by changing the power supply voltage through the adjusting potentiometer P3 POWER. The amplifier is protected.

The power amplifier provides a square-wave signal with rich harmonic content. In order to protect the radio frequency environment, this signal must be filtered.

Matching and tuning unit:

Its task is to match and tune the antenna to the end stage of the transmitter with the settings described in the overview of antennas section.

Antenna:

It emits the RF signal provided by the transmitter.

4.2. Connectors, settings, test points:

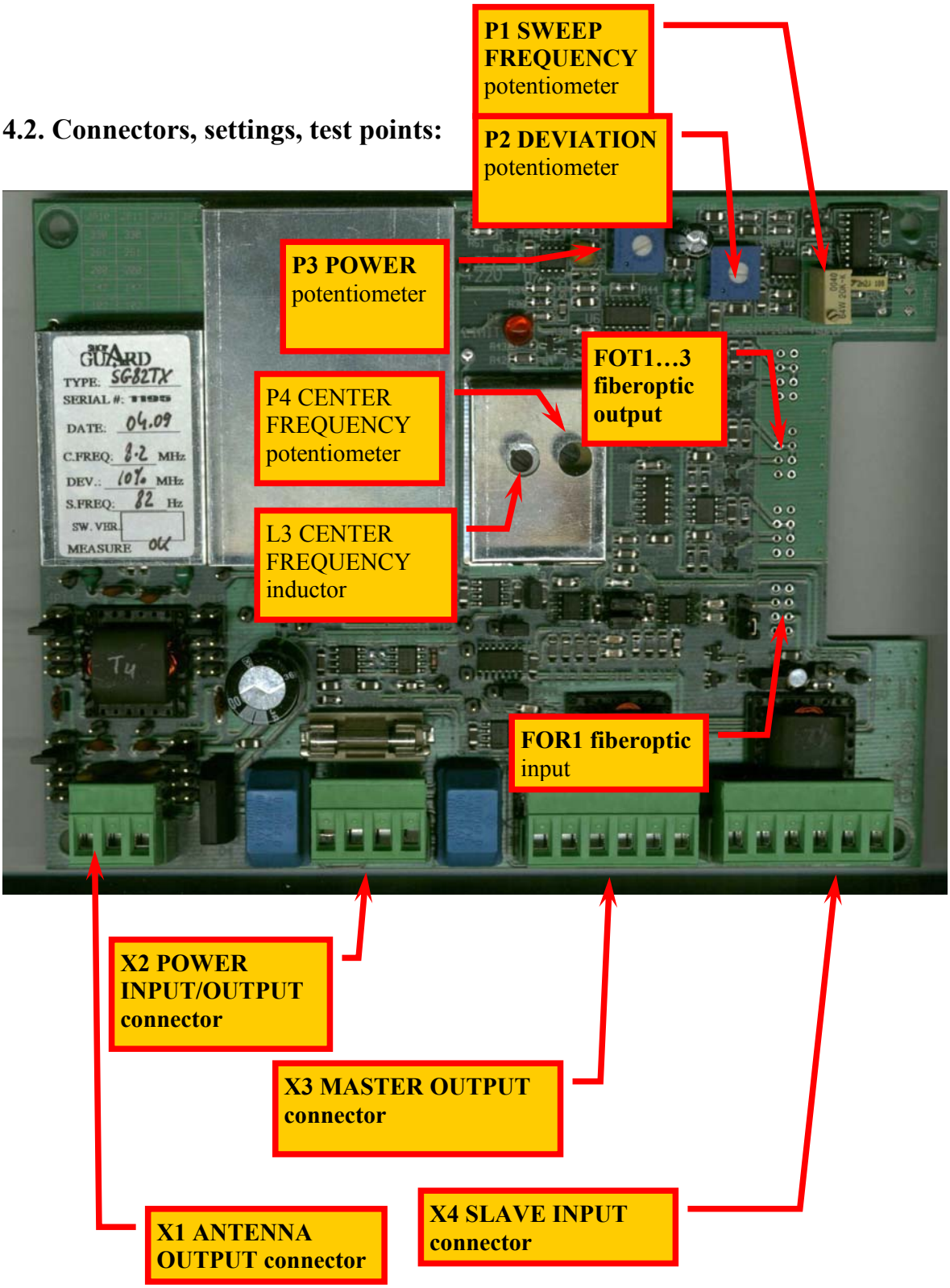

The photo on the last page shows SG82TX version REV3.0. The most important connectors, jumpers, potentiometers, as well as the optical transmitter and receiver are shown in picture.

X1-X4 CONNECTORS

JP1-13 JUMPERS

FOR1 OPTICAL INPUT

FOT1-3 OPTICAL OUTPUT

F1 FUSE

T1,2 MATCHING TRANSFORMER

P1-4 POTENTIOMETERS

The following table shows the functions of the connectors from left to the right:

X1	1	antenna
	2	GND
	3	antenna
X2	1	+24V DC input
	2	a +24V return path (GND)
	3	+power supp. output to the receiver (noise filtered)
	4	- power supp. output to the receiver (noise filtered)
X3	1	master output
	2	centre tap
	3	master output
	4	cp output
	5	centre tap
	6	cp output
X4	1	slave input
	2	centre tap
	3	slave input
	4	slave output
	5	centre tap
	6	slave output

The following table shows the setting elements:

P1	Sweep frequency
P2	Deviation (hub)
P3	RF power
P4	Centre frequency (varicap's bias point)
L3	Centre frequency

LEDs:

D5	DC power supply
D6	RF pow. ampl. protection activated (antenna fails, shorted, it is not at the resonance point, no input signal at the power stage or other failures)

Test points:

TP1	+22V DC
TP2	+12V DC
TP3	+12V DC (master oscillator)
TP4	+5V
TP5	+5.6 V
TP6	0…+20V, depends on the position of P3
TP7	sweep frequency
TP8	Varicap's bias point
TP9	RF power amplifier input
TP10	Slave amplifier input
TP11	Input to cable output slave amplifier
TP12	Output to RF control amplifier 1
TP13	Output to RF control amplifier 2
TP14	Output to RF power amplifier 1
TP15	Output to RF power amplifier 2
TP16	RF output to antenna 1
TP17	RF output to antenna 2
TP18	Output inhibit signal
TP19	Current sensing resistor of the protection of the RF pow. amp.

The board fuse is 0.8A, glass-tube fuse, 5/20 mm, delayed.

JP1	Termination for the last slaved board
JP2	Optical/wire slave input
JP3	Master oscillator power supply
JP4	FOR1 power supply
JP5	Slave output from the a master oscillator / slave input (1-2/2-3)
JP6	RF signal from the master oscillator / slave input
JP7	Slave phase
JP8	RF output signal phase
JP9	Power supply of the cabled slave output amplifier
JP10&11	Antenna interface 1 330 Ω upper 2 261 Ω 3 200 Ω 4 147 Ω 5 102 Ω lower
JP12&13	Antenna resonance tuning capacity 1 direct – no tuning capacity 2 150 pF 3 124 pF 4 107 pF 5 68 pF 2-5 263 pF

4.3. MASTER / SLAVE SETTINGS

JUMPERS	MASTER WITH WIRE CABLE	MASTER WITH OPTICAL CABLE	SLAVE WITH WIRE CABLE	SLAVE WITH OPTICAL CABLE
JP1	OFF	OFF	ON if it's the last	OFF
JP2	2-3	1-2	2-3	1-2
JP3	ON	ON	OFF	OFF
JP4	OFF	OFF	ON	ON
JP5	1-2 (M)	1-2 (M)	2-3 (S)	2-3 (S)
JP6	1-2 (M)	1-2 (M)	2-3 (S)	2-3 (S)
JP7*	1-2 or 2-3	1-2 or 2-3	1-2 or 2-3	1-2 or 2-3
JP8*	1-2 or 2-3	1-2 or 2-3	1-2 or 2-3	1-2 or 2-3
JP9	ON	ON	ON	ON
JP10-13	These jumpers are in factory default settings.	These jumpers are in factory default settings.	These jumpers are in factory default settings.	These jumpers are in factory default settings.
		AT LEAST 1 FOT OPTICAL OUTPUT MUST BE SOLDERED!		FOR 1 SOLDERED! IF IT'S NOT THE LAST SLAVE FOT1 (2,3) OPTICAL OUTPUT MUST BE SOLDERED!

FOR1, FOT1-3 ARE OPTIONAL!
*jumpers are in 2-3 is recommended.

Master/slave wire connections:
MASTER X3 1,3 ->
SLAVE X4 1,3 (1 to 1, and 3 to 3) and X3 1,3 ->
on next SLAVE X4 1,3 and X3 1,3 to next SLAVE X4 1,3
on the last SLAVE JP1 is ON.
Cable is normal twisted pair cable 2x0.35 or 2x0.5 mm or RG 174 coax.
RG 174 is for sync. from TX to deactivator

Master/slave optical connections:
MASTER FOT1 (or 2 or 3) ->
SLAVE FOR1 and FOT1 (or 2 or 3) to next SLAVE

Opto TX = HFBR-1414 (Hewlett Packard)
Opto RX = HFBR-2416 (Hewlett Packard)
Connectors and cables for these type of TX, RX.
Use 62.5/125 um ST – ST multimode fiberoptic cable.
Before you use optical synchronisation contact with Shopguard's technical experts!

You can install the system with wire up to 4 TX boards. If it's higher you must to use optical connections.

5. Overview of the receiver board (RX) and the test box, possible settings

5.1. Schematic diagram of the receiver board:

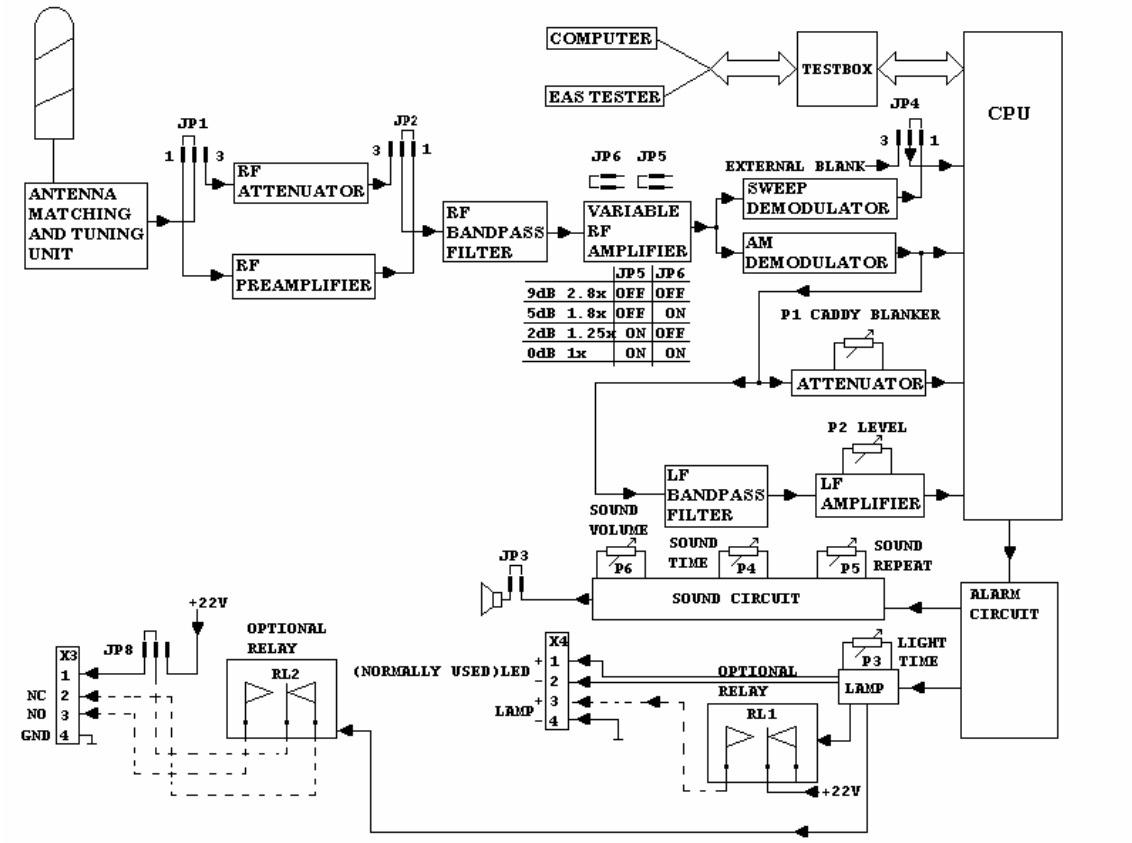

Tasks of the individual blocks are the following:

Antenna:
Receives the signal of the transmitter, or the tag in the transmitter's field.
Antenna matching and tuning unit:
Matching and tuning the antenna to the board by using the JP9 jumper row.
RF pre-amplifier / RF attenuator:
In case of remote antennas, it amplifies the RF signal to an appropriate level / in case of close range antennas (and Cactusguard antenna) it lowers the RF signal to an appropriate level.
RF band-pass filter:
It selects the band for the effective operation.
RF amplifier with variable gain:
Setting of the RF signal to be processed according to the processing task. (JP5, JP6)
AM demodulator:
The tag in the field of the transmitter causes amplitude modulation. Demodulation of this signal, generation of the signal proportional with the RF field strength, as well as a signal for the processor, that is proportional with the environmental noise.

Low frequency band-pass filter:
Its task is to select the effective bandwidth of the demodulated AM signal for the processor. Its level can be adjusted with the potentiometer P2 LEVEL.
Caddy (shopping trolley) blanker:
In some case there is possible necessary to use caddy blanker function. The detection function is switched off when caddy (shopping trolley) is between the antennas.
CPU:
It is the central element of the board. Its task is to detect tags by using the software running on it. It generates the blanking pulse from the sweep signal, generates alarm, controls ALC and serves the test box.
Sweep demodulator:
Demodulation of the FM signal. With its help, the transmitter and the receiver are capable of synchronized operation. It can be locked in the appropriate frequency range by using the PLL RF tuning capacity (position number C86).
Test box:
It provides possibility to perform system settings and communication with EAS tester or computer.
EAS tester:
It's a very helpful tool to controlling the parameters of RX board in visual and numerical modes.
Alarm circuit:
Generates alarm signal for the sound and lamp circuit.
Sound circuit:
Generates alarm by a beeper. Potentiometers: P6 volume, P4 sound repeat, P5 sound time.
Lamp circuit:
Generates alarm by lamp and for optional relays. Potentiometer: P3 light time.
Optional relays:
RL1 for using lamp. (Normally LEDs used for light signal in the antennas)
RL2 for sending the alarm signal for other systems: etc. CCTV. It can provide contact or +22 V, in NO and NC method.

5.2. Connectors, settings and test points of the receiver board:

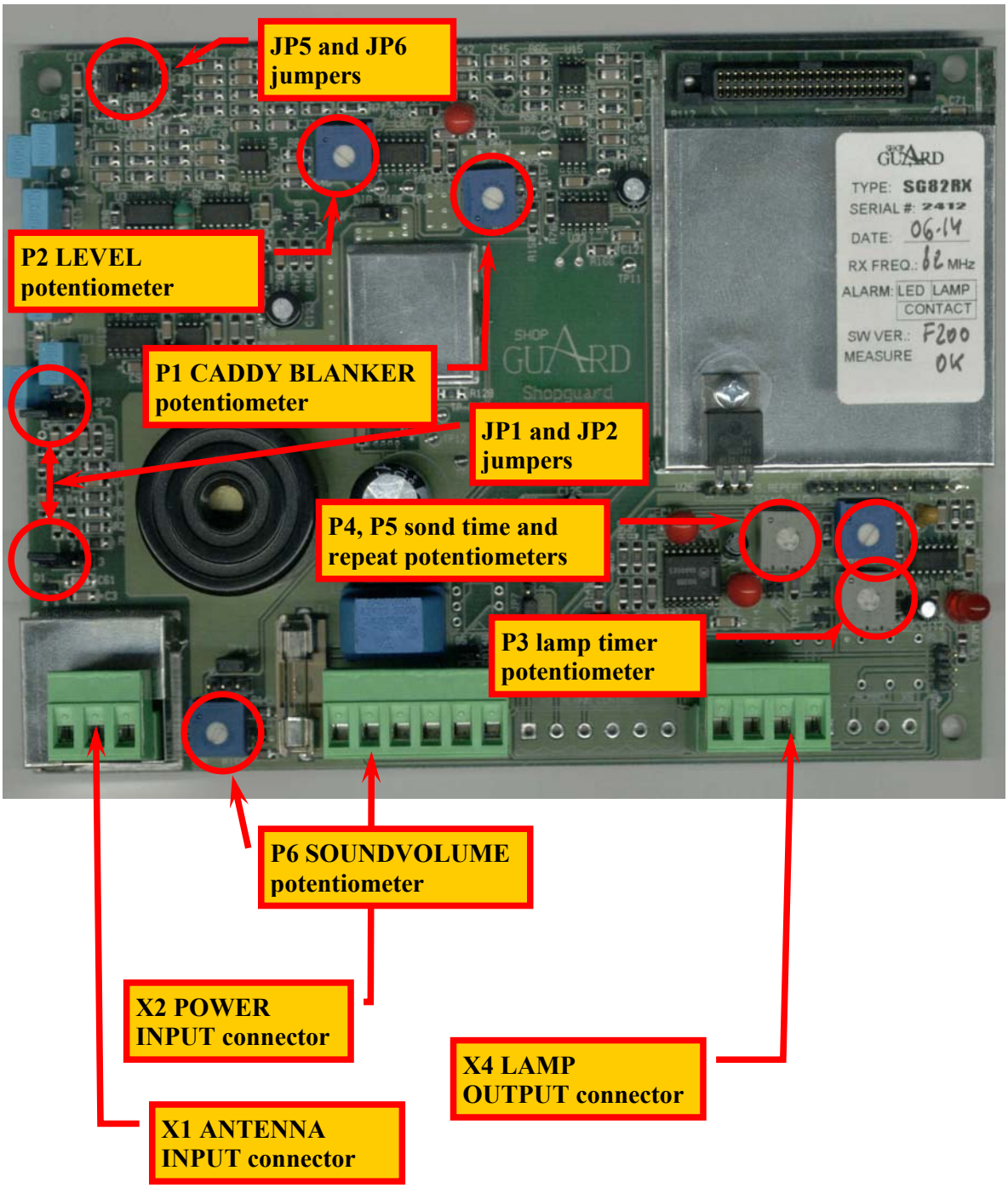

You can see the receiver board on this picture. On the datasheet are some important information for you: type, serial number, date, centre frequency (8.2MHz or 10MHz), software version. If you find problems with the board or the system, please send us these information.

The board connectors:

X1	1 antenna 2 common 3 antenna
X2	1 +24V DC power supply 2 0 V DC power supply 3 N.C. 4 N.C. 5 –external blanking signal 6 + external blanking signal
X3	1 alarm output 2 alarm input from another RX board 3 +22V 4 GND 5 GND 6 external input of sweep demodulator (wire synchron input)
X4	1 +LED (+22 V and 100 Ω) 2 –LED (100 mA max.) 3 +lamp 4 –lamp
X5	relay 1 output common point if JP8 / 2-3 closed relay 2 output (NC) relay 3 output (NC) 4 common point
X6	test box connector

Functions of the LEDs:

D6 (red)	Alarm signaling
D7 (red)	Power supply indicator

Setting possibilities:

C86	PLL RF
P2	LF level
P3	Lamp timer
P4	Audible signal timer
P5	Audible signal repeat
P6	Audible signal volume
P1	Caddy blanker

5.3. The test box (PCB-TEST 1.0)

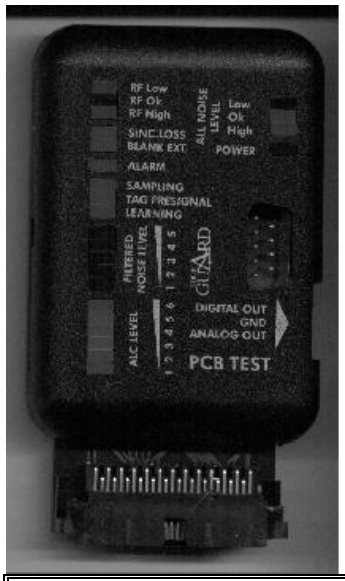

The test box connects to the X6 connector of the receiver board. The receiver board can be fitted even if the receiver board is operating. It provides help for testing and setting of the system delivered with factory set boards. The LEDs indicate the following (from up to down):

(In case of proper operation and without alarm, the LEDs indicated with ***underlined bold Italics*** should be lit)

POWER +5 V DC OK (GREEN)	+5 V OK
RF LOW	RF level is low on RX
RF OK	RF level is OK
RF HIGH	RF level is high
NOISE HIGH (RED)	High noise level
NOISE CRITICAL (YELLOW)	Critical noise level
NOISE OK (GREEN)	Noise level OK
ALC1- ALC6 (YELLOW)	ALC level (Auto Level Control)
FILTERED NOISE LEVEL 1…5 (GREEN)	Filtered noise level
LEARNING (RED)	Caddy blanking
TAG PRESIGNAL (YELLOW)	Tag signal detected during at least 8 consecutive rising or falling sweeps
SAMPLING (RED)	Oversampling
ALARM (RED)	Alarm
BLANK EXTERNAL (RED)	External blanking signal
SYNC. LOSS(RED)	Synchronisation is loss

6. Examples of complete systems

IMPORTANT: the following sections help you to setting the systems with receiver board from software version F196 and hardware version 7.0. There is no difference by settings in the different transmitter board versions.

In this section you can find examples for settings of different systems. We draw your attention to some important items:

IMPORTANT: The software of the receiver board stands up and starts to operate only if the green RF OK LED is ON.

In order to decrease adverse reflections and interaction with other systems, you should use as low transmit power as possible. The antennas should be installed always according to section overview of the antennas of this manual. For commissioning the system you should always use the labels with the worst parameters. During the test run you should hold the label in equal distance from the TX and RX antennas, in the half of the antenna height, in front of the antenna, at the third of the distance between the antennas and perpendicular to the antenna. In this case, the properly configured system gives an alarm. If you hold the label in the height of the upper and lower crossbar in the position of 45° and push it between the two antennas, the system should rise an alarm.

6.1. Table of contents:
6.2. Dual antenna configurations:
6.2.1. Dual antenna system settings with the help of the test box when the distance is 1 m
6.2.2. Dual antenna system settings with the help of the test box when the distance is 1.3 m
6.2.3. Triple antenna system (RX – TX – RX)

8.2. Dual antenna system

6.2.1. Dual antenna system settings with the help of the test box when the distance is about **1m**

After installation of the antenna pair according to the remarks detailed in section overview of the antennas, you should connect the power supply and fit the test box to the appropriate connector of the receiver board. In case of antenna distance of 1m and less, the receiver's jumpers JP 1 and JP 2 should be in the right position in other case in position left. Now, you can connect the test box. Jumper settings of the ***TX*** (transmitter) board are as follows:

	SETTINGS ON THE TX BOARD
JP 3	ON
JP 5	1-2 (M)
JP 6	1-2 (M)
JP 7	2-3
JP 8	2-3
JP 10 JP 11 JP 12 JP 14	According to different antenna types (not recommended to change!)

Power connections of boards:

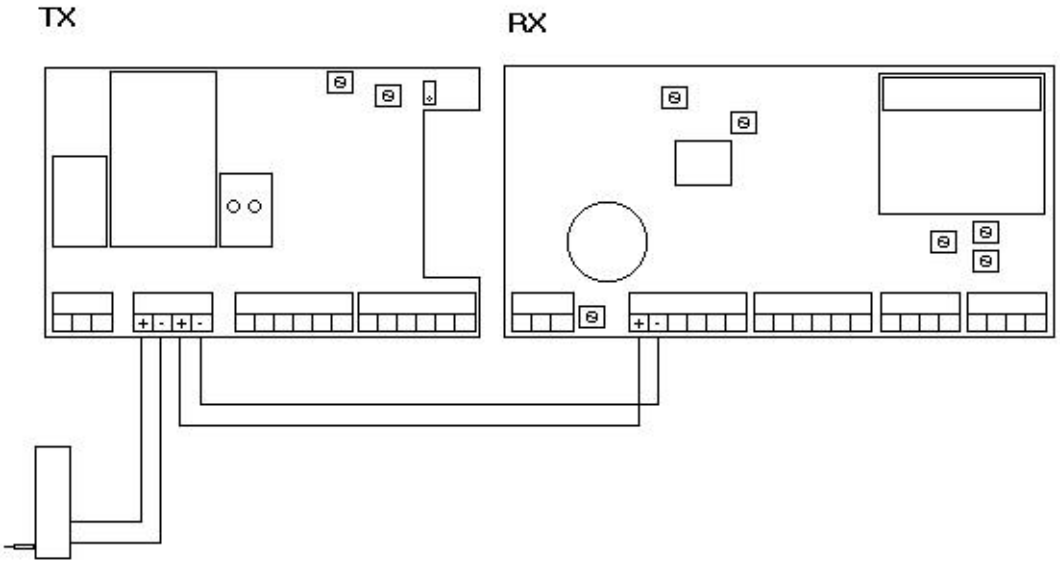

Jumper settings on the ***RX*** (receiver) are the following:

	JUMPER SETTING ON THE RX BOARD
JP1	RIGHT
JP2	RIGHT
JP5	ON
JP6	ON
JP7	1-2
JP3	ON
JP10	1-2
JP11	LF-A

IMPORTANT: The software of the receiver board stands up and starts to operate only if the green RF OK LED is ON.

-Adjust P3 POWER potentiometer about 75% (at 5-6 o'clock) and check RF OK LED on test board. If RF HIGH is lighting please decrease (turn left) P3 POWER on TX. (If RF LOW is lighting, increase P3 POWER on TX) If it's possible find the border of RF LOW /OK and RF OK/HIGH and adjust it to the middle.
-Set P2 level on RX and check with ALL NOISE LEVEL on test box. It must be on border of OK and HIGH (it must be red), and all ALC LEDs must switch OFF. If one or more are lighting, decrease P2 level on RX slowly to switch off.

6.2.2. Dual antenna system settings with the help of the test box when the distance is **1.3 m**

After installation of the antenna pair according to the remarks detailed in section overview of the antennas, you should connect the power supply and fit the test box to the appropriate connector of the receiver board. In case of antenna distance of 1m and less, the receiver's jumpers JP 1 and JP 2 should be in the right position in other case in position left. Now, you can connect the test box. Jumper settings of the ***TX*** (transmitter) board are as follows:

	SETTINGS ON THE TX BOARD
JP 3	ON
JP 5	1-2 (M)
JP 6	1-2 (M)
JP 7	2-3
JP 8	2-3
JP 10 JP 11 JP 12 JP 14	According to different antenna types (not recommended to change!)

Power connections of boards:

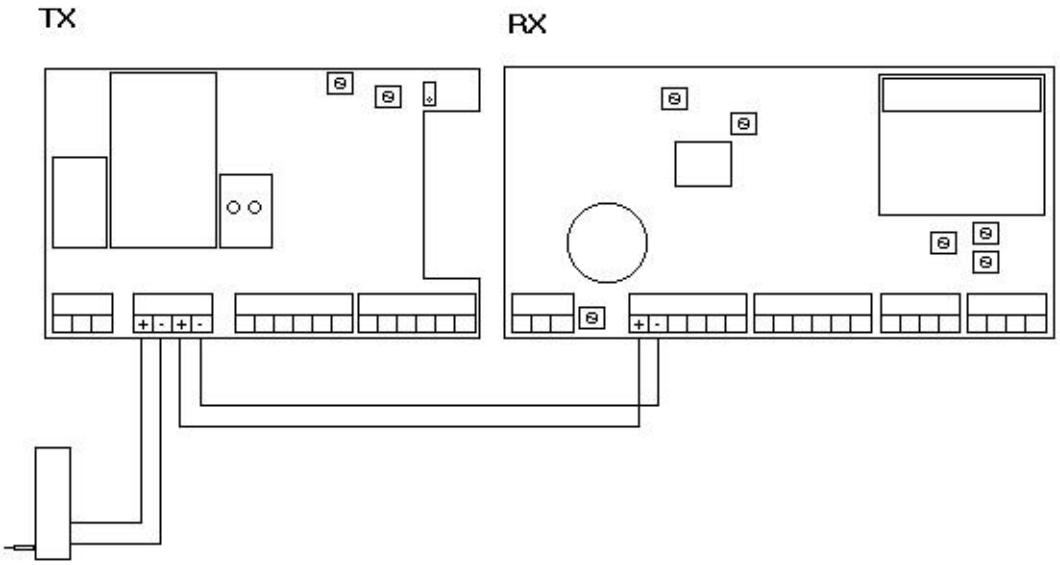

Jumper settings on the ***RX*** (receiver) are the following:

JUMPER SETTING ON THE RX BOARD	
JP1	LEFT
JP2	LEFT
JP5	ON
JP6	ON
JP7	1-2
JP3	ON
JP10	1-2
JP11	LF-A

IMPORTANT: The software of the receiver board stands up and starts to operate only if the green RF OK LED is ON.

-Adjust P3 POWER potentiometer about 75% (at 5-6 o'clock) and check RF OK LED on test board. If RF HIGH is lighting please decrease (turn left) P3 POWER on TX. (If RF LOW is lighting, increase P3 POWER on TX) If it's possible find the border of RF LOW /OK and RF OK/HIGH and adjust it to the middle.
-Set P2 level on RX and check with ALL NOISE LEVEL on test box. It must be on border of OK and HIGH (it must be red), and all ALC LEDs must switch OFF. If one or more are lighting, decrease P2 level on RX slowly to switch off.

6.2.3. Triple antenna system (RX – TX -- RX)

The symmetrically installed RX--TX--RX antennas should be set according to last paragraphs. First, you should set one RX--TX pair, and then, if it works well, set the second RX antenna, without setting TX. If TX setting is necessary, then the other RX antenna should be set, too.

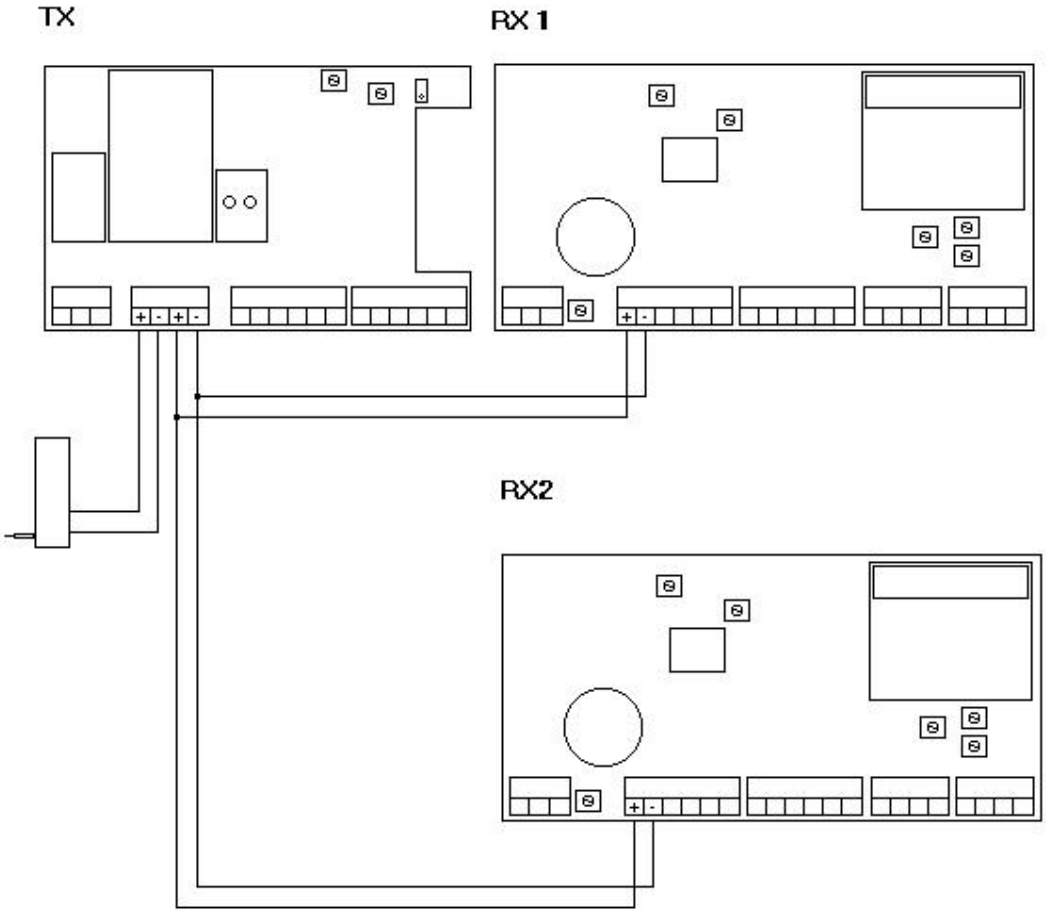

9) FCC

NOTE: Changes or modifications not expressly approved by Shopguard could void the user's authority to operate the equipment.