AUTO - SCANNING WITH DIGITAL CONTROL LCD COLOR MEDICAL MONITOR

AMM240ED

Operation Manual

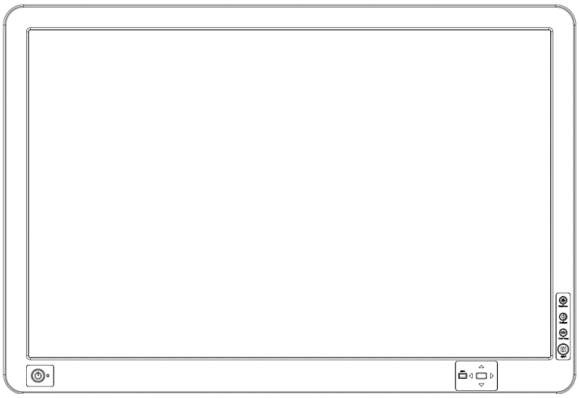

For future reference, record the serial number of your display monitor in the space below :

Serial Number

The serial number is located on the back of the monitor

Back of the Monitor

WARNING
The title «WARNING» is used to inform the users of possible causes that could inflict the injury, death, or property damage to the patients.

CAUTION
The title «CAUTION» is used to inform the users of possible causes that could inflict the patients although it might not severe enough to cause death.

NOTE
The title «NOTE» is used to inform the users of items that are of importance in terms of installation, operation, or maintenance of the Equipment although the failure does not inflict the bodily harm to the patients.

Barco, Inc. 2017
All other trademarks are the property of their reference owners.
This document is subject to change without notice.
BARCO provides this information as reference only. Reference to other vendor's products does not imply any recommendation or endorsement.

Revision Control

Document number I-101117190001
Rev. A

Table of Contents

Product Description and Intended Use 3
Warnings and Cautions 4
Symbol Definitions 7
EU Declaration of Conformity for Medical Applications 8
Safety Precaution 9
Cleaning the Monitor 9
Recommendation to Use more than One Unit 9
On Burn-in 9
Power Management Function 10
Preset Modes 11
Video Signals 12
PIP / POP / PBP function 13
DDC 14
Installation 14
Connecting the Power Cord 15
User Function / Messages 16
OSD Section 17
Troubleshooting 25
Specifications of (AMM240ED) 26
Classification 27
Electromagnetic Compatibility 28
Dimension Drawing (mm) of AC Adapter 30
Dimension Drawing (mm) of AMM240ED 31
Connectors 32
Description of Warranty 34

Product Description and Intended Use

Please check the following items are present when you unpack the box, and save the packing materials in case you will need to ship or transport the monitor in future.

- AMM240ED LCD Monitor (the equipment that displays information, graphic data, image and video on the LED screen) and two video cables
  (1) BNC x4 to HD15 Cable(1) DVI-I cable

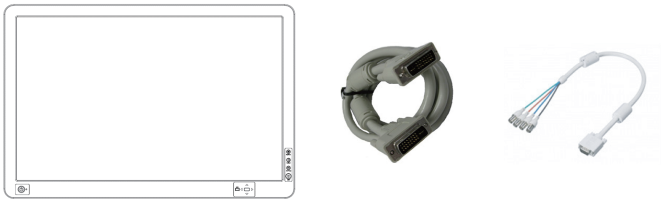

- AC Power cord*

- AC-Adapter

⚠ CAUTION
Model No :BM060S24F06
(Bridgepower)

- BNC Cable, and Y/C Cable.

- DC extension cable (optional)
  15ft length: Model 1501047***(Bridgepower)
  75ft length: Model 1501047***(Bridgepower)
  ***: blank or 001~999

- CD Multi-language Manual, English User Manual and 4pcs VESA screws

- Cable Cover

- Stand (optional)
  33-329-085, SB-004W

*Might vary pending on region standard

Warnings and Cautions

Please read this manual and follow its instructions carefully. The words warning, caution, and note carry special meanings and should be carefully reviewed:

Warning **The personal safety of the patient or physician may be involved. Disregarding this information could result in injury to the patient or physician.**

Caution **Special service procedures or precautions must be followed to avoid damaging the instrument.**

Note Special information to make maintenance easier or important information more clear.

An exclamation mark within a triangle is intended to alert the user to the presence of important operating and maintenance instructions in the literature accompanying the product.

A lightning bolt within a triangle is intended to warn of the presence of hazardous voltage. Refer all service to authorized personnel.

Warning **TO AVOID POTENTIAL SERIOUS INJURY TO THE USER AND THE PATIENT AND/OR DAMAGE TO THIS DEVICE, THE USER MUST :**

Warranty is void if any of these warnings are disregarded.

Barco, Inc. accepts full responsibility for the effects on safety, reliability, and performance of the equipment only if:

- Re-adjustments, modifications, and/or repairs are carried out exclusively by Barco, Inc.
- The electrical installation of the relevant operating room complies with the applicable IEC and CE requirements.

Warning **Federal law (United States of America) restricts this device to use by, or on order of a physician.**

The Barco, Inc. AMM240ED monitor has been tested under UL (ANSI/AAMI ES 60601-1) standard and UL listed for Medical application.

Barco, Inc. reserves the right to make improvements in the product(s) described herein. Product(s), therefore, may not agree in detail to the published design or specifications. All specifications are subject to change without notice. Please contact Barco, Inc. directly or phone your local Barco, Inc. sales representative or agent for information on changes and new products.

Warnings

1. Read the operating manual thoroughly and be familiar with its contents prior to using this equipment.
2. Carefully unpack the unit and check if any damage occurred during shipment.
3. Should any solid object or liquid fall into the panel, unplug the unit and have it checked by qualified personnel before operating it any further.
4. Uplug the unit if it is not to be used for an extended period of time. To disconnect the cord, pull it out by the plug. Never pull the cord itself.
5. Be a qualified physician, having complete knowledge of the use of this equipment.
6. Test this equipment prior to a medical procedure. This monitor was fully tested at the factory before shipment.
7. Avoid removing covers on control unit to avoid electric shock.
8. Attempt no internal repairs or adjustments not specifically detailed in this operating manual.
9. Pay close attention to the care, cleaning instructions in this manual. A deviation may cause damage (refer to the Cleaning section).
10. DO NOT STERILIZE MONITOR.
11. Read the entire instruction manual before assembling or connecting the camera.
12. Do not place the monitor or any other heavy object on the power cord. Damage to the cable can cause fire or electirc shock.
13. Monitor with power supply is suitable for use in patient environment.
14. DO NOT stack more than 3 boxes high
15. To avoid the risk of electric shock, this equipment must only be connected to a supply mains with protective earth.

This equipment has been tested and found to comply with the limits for medical devices in IEC 60601-1-2:2014. These limits are designed to provide reasonable protection against harmful interference in a typical medical installation.

This equipment generates, uses and can radiate radio frequency energy and, if not installed and used in accordance with the instructions, may cause harmful interference to other devices in the vicinity. However, there is no guarantee that interference will not occur in a particular installation. If this equipment does cause harmful interference to other devices, which can be determined by turning the equipment off and on, the user is encouraged to try to correct the interference by one or more of the following measures:
- Reorient or relocate the receiving device.
- Increase the separation between the equipment.
- Connect the equipment into an outlet on a circuit different from that to which the other device(s) are connected.
- Consult the manufacturer or field service technician for help.

NOTICES TO USER

This device complies with Part 15 of the FCC Rules. Operation is subject to the following two conditions:
(1) this device may not cause harmful interference, and (2) this device must accept any interference received, including interference that may cause undesired operation.

FCC WARNING

This equipement generates or uses radio frequency energy. Changes or modifications not expressly approved by the party responsible for compliance could void the user's authority to operate the equipment. The user could lose the authority to operate this equipment if an unauthorized change or modification is made.

Cautions

1. The AC Adapter must be plugged into a Grounded power outlet.
2. Use only the proprietary AMM240ED power supply for the AMM240ED monitor. Make a proper connection by ensuring that the shrink tubing completely secures the connection between the DC power cord and the extension cord.
3. Turn power off when unit is not in use.
4. Never operate the unit right after having transported from a cold location directly to a warm location.
5. Do not expose the monitor to moisture or directly apply liquid cleaners directly to the screen. Spray the cleaning solution into a soft cloth and clean gently.
6. Handle the monitor with care. Do not strike or scratch the screen.
7. Do not block the monitor cooling vents. The monitor is cooled by natural convection and has no fan.
8. Do not force the monitor past 28 degrees of vertical when adjusting the screen position. (For monitors equipped with stands only.)
9. Remove the power module and connection when transporting the unit.
10. Save the original carton and associated packing material. They will be useful should you have to transport or ship the unit.
11. Allow adequate air circulation to prevent internal heat buildup.
12. Do not place the unit on surfaces (rugs, blankets, etc.) or near materials (curtains, draperies) that may block the ventilation slots.
13. Do not install the unit near sunlight, excessive dust, mechanical vibration or shock.
14. The unit is designed for operation in a horizontal position. Never operate the unit in a vertical position.
15. Keep the unit away from equipment with strong magnets (i.e. a large loudspeaker.)
16. Do not expose the monitor to moisture or excessive dust.
17. Equipment with SIP/SOP connectors should either comply with IEC 60601-1 harmonized national standard or the combination should be evaluated. Do not touch the patient with signal input or output connectors.
18. Use only a hospital grade power supply cord.
19. This equipment has been tested and found to comply with the limit for a Class B digital device, pursuant to Part 15 of the FCC Rules. These limits are designed to provide reasonable generate uses and can radiate radio frequency energy, if not installed and used in accordance with the instructions, may cause harmful interference to radio communications. However, there is no guarantee that interference will not occur in a particular installation, which can be detemined by turning the equipment off and on, the user is encouraged to try to correct the interference by one or more of the following measures:
    - Reorient or relocate the receiving device.
    - Increase the separation distance between the equipment.
    - Connect the equipment to an outlet on a circuit different from that to which the other device(s) are connected.
    - Consult the manufacturer or field service technican for help.
20. Grounding reliability can only be achieved when the equipment is connected to an equipment receptacle labeled "Hospital Only" or "Hospital Grade."
21. The products have lower breaking capacity type. So do not install at the building power system prospective short-circuit current exceeding 35 A.
22. Disconnecting of the power cord from teh AC/DC Adapter is the proper means of isolation from the supply mains.

Note To connect to an international power supply, use a an attachment plug appropriate for the power outlet.

Note Refer to the "Electromagnetic Compatibility" (EMC) section of this manual to ensure EMC. The AMM240ED must be installed and operated according to the EMC information provided in this manual.

Symbol Definitions

Dangerous: High Voltage

Direct Current

SN Serial Number

This Way Up

Fragile, Handle with Care

Stacking Limit by Number

Keep Dry

Recyclable

See Accompanying Document

Indicates proof of conformity to applicable European Economic Community Council directives and to harmonized standards published in the official journal of the European Communities.

EC REP Authorized Representative in Europe

Date of Manufacture

Manufacturer

Indicates Protective Earth Ground.

For Indoor Use Only.

Tested to Comply with FCC Class B Standards.

Stand-by

Tested to Comply with Japan VCCI Certification

Tested to Comply with China CCC Certification

BSMI Mark for Taiwan Approval

Mark for CU Countries-Russia,Kazakhstan, Belarus

China RoHS symbol. Number indicates EFUP(Environmental Friendly Use Period) from the date of manufacturing.

Medical Equipment

Medical Equipment is in accordance with ANSI/AAMI ES 60601-1 and CAN/CSA C22.2 No. 60601-1 in regards to electric shock, fire hazards, and mechanical hazards.

IP22 Tested to Comply with IP (Ingression Protection) Rating

WEEE symbol for recyclable product. Please do not throw the product with this symbol in the bin.

EU Declaration of Conformity for Medical Applications

A Declaration of Conformity has been filed for this product. A sample of this document may be found in the addendum which accompanies this manual. For a copy of the Declaration of Conformity document, please contact Barco, Inc. and request the AMM240ED DOC.

Prepare to Unpack Monitor

Before you unpack your monitor, prepare a suitable workspace. You need a stable and level surface near a grounded wall outlet in an area which is relatively free of glare from sunlight or other sources of bright light. The monitor is cooled by natural convection (it has no fan).
For optimum performance, do not block the cooling vents.

While unpacking the monitor, inspect it and other package contents for shipping damage that could cause a fire or shock hazard. Immediately report any shipping damage to the carrier or transportation company and contact customer service for monitor in case of return.

After you unpack the monitor, make sure the following items are included

- Monitor with video cable

- AC adapter with cable
  CAUTION: AC Adapter must be plugged into Grounded a power outlet

⚠ CAUTION : AC adapter
⚠ Model No: BM060S24F06 (Bridgepower)

- This operation manual

⚠ Note: Your system provider may offer alternative cords or cables depending on the installation requirement and local geography issues.

Safety Precaution

- Avoid placing the monitor, or any other heavy object, on the power cord to prevent fire or electrical shock from damage to the power cord.
- Do not expose the monitor to rain, excessive moisture, or dust to avoid fire or shock hazard.
- Do not cover the slots or openings of the monitor for proper heat dissipation. Always put the monitor in a place where there is adequate ventilation.
- Avoid placing the monitor against a bright background or where sunlight or other light sources may reflect on the area of the monitor. Place the monitor just below eye level.
- Handle with care when transporting the monitor.
- Refrain from giving the shock or scratch to the screen, as screen is fragile.
- Performance of preventive maintenance is not essential. Periodic maintenance inspections are essential to keep the monitor in optimum condition and ensure safe operation. We recommend a functional and safety test of the monitor at regular intervals (e.g. at least once a year).

Cleaning the Monitor

No specific liquid or chemical necessary when cleaning this LCD monitor However, we suggest to clean the monitor with non-abrasive cloths and cleaning solutions used in hospitals to clean similar equipment. We recommend using 70% isopropyl alcohol for the screen surface and warm water and a mild detergent for all other surfaces. Other acceptable cleaning agents are listed below:

- 70% isopropyl alcohol
- Cidex (2.4% glutaraldehyde solution)
- 0.5% Chlorhexidine in 70% isopropyl alcohol

To clean the screen, do not spray liquid cleaners directly on to the unit. Stand away from the monitor and spray cleaning solution onto a cloth. Without applying excessive pressure, clean the screen with the slightly dampened rag.

Recommendation to Use More Than One Unit

As unforeseen situations can occasionally occur for the monitor, when the display is used please use a safety control. It is strongly recommended you use more than one unit or prepare a spare unit in case there is an emergency.

On Burn-in

Permanent burn-in may occur from the following:

- Displaying color bar or static images repeatedly or for a long period of time.
- Using the unit repeatedly in a high temperature/ high humidity environment
- Displaying an image smaller than the monitor continuously.

To reduce the risk of burn- in, it is recommended to turn off the power of the unit, and reduce the brightness when the unit is not in use.

Power Management Function

The monitor is equipped with the power management function which automatically reduces the power consumption when not in use in three power level modes.

- **Stand-by Mode**

The monitor goes into stand-by mode when the horizontal sync signal is off for about 10 seconds. In this mode, the screen goes off and the power LED blinks for 1 second On and 1 second Off. The screen is displayed after the horizontal sync signal is restored.

- **Suspend Mode**

The monitor goes into suspend mode when the vertical sync signal is off for about 10 seconds. The power consumption during this is 10 W. In this mode, the screen goes off and the power LED blinks for 1 second On and 1 second Off. The screen is displayed after the vertical sync signal is restored.

- **Off Mode**

The monitor goes into power-off mode when the vertical and horizontal sync signals are off for about 10 seconds. In this mode, the screen goes off and the power LED blinks for 1 second On and 1 second Off. The screen is displayed after the vertical and horizontal sync signals are restored.

Power Management System

The AMM240ED Medical Monitor power management proposal provides four phases of power saving modes by detecting the horizontal sync signal as shown in the table below.

State	Normal Operation	DPMS Standby	DPMS Suspend	DPMS Off
Horizontal Sync	Active	Inactive	Active	Inactive
Vertical Sync	Active	Active	Inactive	Inactive
Video	Active	Blanked	Blanked	Blanked
Power Indicator	Green	Green Flashing (1 sec. Interval)	Green Flashing (1 sec. Interval)	Green Flashing (1 sec. Interval)
Power Consumption	40W	15W	15W	15W

When the monitor is power saving mode or detects an incorrect timing, the screen will be blank and power LED indicator will blink.

PRESET MODES

Input Signal Timing

Resolution	Horizontal frequency (KHz)	Vertical frequency (Hz)	Pixel clock (MHz)
640 x 350 @70Hz	31.469	70.087	25.175
640 x 480 @60Hz	31.469	59.940	25.175
640 x 480 @75Hz	37.500	75.000	31.500
800 x 600 @56Hz	35.156	56.250	36.000
800 x 600 @60Hz	37.879	60.317	40.000
800 x 600 @75Hz	46.875	75.000	49.500
1024 x 768 @60Hz	48.363	60.004	65.000
1024 x 768 @70Hz	56.476	70.069	75.000
1024 x 768 @75Hz	60.023	75.029	78.750
1152 x 864 @60Hz	54.348	60.053	80.000
1152 x 864 @70Hz	63.955	70.016	94.200
1152 x 864 @75Hz	67.500	75.000	108.000
1280 x 1024 @60Hz	63.981	60.02	108.000
1680 x 1050 @60Hz	64.742	59.946	119.125
1680 x 1050 @60Hz	65.160	59.944	147.000
1600 x 1200 @60Hz	74.077	59.981	130.375
1920 x 1080@60Hz	67.500	60.00	148.500
1920 x 1200@60Hz	74.099	59.999	154.125

Video Signals

Format	DVI-I	HD-15	Y/C	SDI1	SDI2	Component/RGBs	
						Y/Pb/Pr/ RGB+SOG	RGB+ CS
NTSC-M NTSC-443			O				
PAL-BDGHI PAL-M PAL-N PAL-60			O				
480/59.94i		O		O	O		O
480/59.94p						O	O
576/50i		O		O	O		O
576/50p	O	O				O	O
720/50p	O	O		O	O	O	O
720/59.94p	O	O		O	O	O	O
720/60p	O	O		O	O	O	O
1080/23.98p		O		O	O	O	O
1080/24p		O		O	O	O	O
1080/25p	O	O		O	O	O	O
1080/29.97p	O	O		O	O	O	O
1080/30p	O	O		O	O	O	O
1080/50i	O	O		O	O	O	
1080/59.94i	O	O		O	O	O	
1080/60i	O	O		O	O	O	
1080/50p	O	O					
1080/60P	O	O					

PIP / POP / PBP Function*

The following combination options are available to you:

PIP / Main	DVI-I	SDI1	SDI2 (Optional)	Component / RGBs	HD-15	Y/C
DVI-I	X	O	X	O	O	O
SDI 1	O	X	O	O	O	X
SDI 2 (Optional)	X	O	X	O	O	O
Component/ RGBs	O	O	O	X	X	O
HD-15	O	O	O	X	X	O
Y/C	O	X	X	O	O	X

*When the frame frequency of the main screen is different from that of the sub screen, the picture may be disturbed.

*When both main and sub screens input interlace signals, the picture may be disturbed.

DDC

To make your installation easier, the monitor is able to Plug and Play with your system if your system also supports DDC protocol. The DDC (Display Data Channel) is a communication protocol through which the monitor automatically informs the host system about its capabilities, for example, supported resolutions and corresponding timing. The monitor supports DDC1 and DDC2B standard.

Installation

To install the monitor to your host system, please follow the steps as given below:

Steps

1. Use the supplied video cable (DVI-I, Y/C, BNC, BNCx4 to HD15) then connect to the host system accordingly.
2. Connect the DC power to the DC power connector on the monitor.
3. Connect one end of AC power cord into the AC Adapter and the other end to AC power outlet.
4. Then turn the host system on and then the monitor.
5. If the monitor still does not function properly, please refer to the troubleshooting section to diagnose the problem.

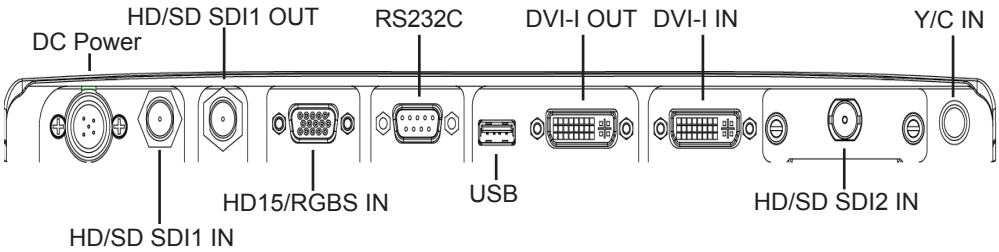

Connecting the Power Cord

* Check first to make sure that the power cord in use is the correct type required for the area.
* This monitor has an universal AC adapter that allows operation in either AC 100 - 240 V ac voltage area. No user-adjustment is required.
* Plug one end of the power cord to the AC adapter, plug another end to a proper AC outlet.

The cord set should have the appropriate safety approvals for the country in which the equipment will be installed and marked HAR.

For 120 volt Applications, use only the UL Listed detachable power cord with NEMA configuration 5-15P type (parallel blades) plug cap. For 240 volt applications use only the UL Listed detachable power supply cord with NEMA configuration 6-15P type (tandem blades) plug cap.

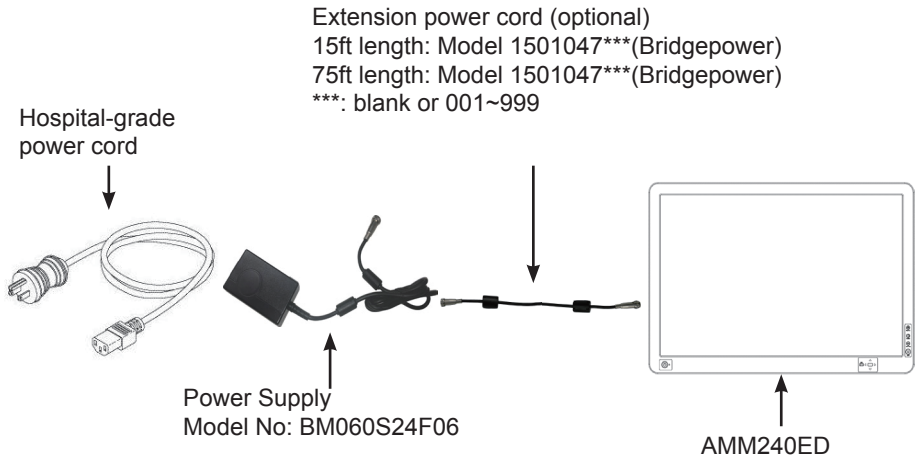

User Functions / Messages

Key Name and Function

Power : Turns ON/OFF the system.
Menu : Enter /Exit OSD menu.
Left : Decrease setting/Value.
Right : Increase setting/value. Enter Sub menu
Up : Move to previos item.
Down : Move to next time.
Select : Select item.
Brightness : Quick key for brightness adjustment.
Contrast : Quick key for contrast adjustment.
Scale Mode : Quick key for scale mode adjustment
Input: Activate the video source selection menu.

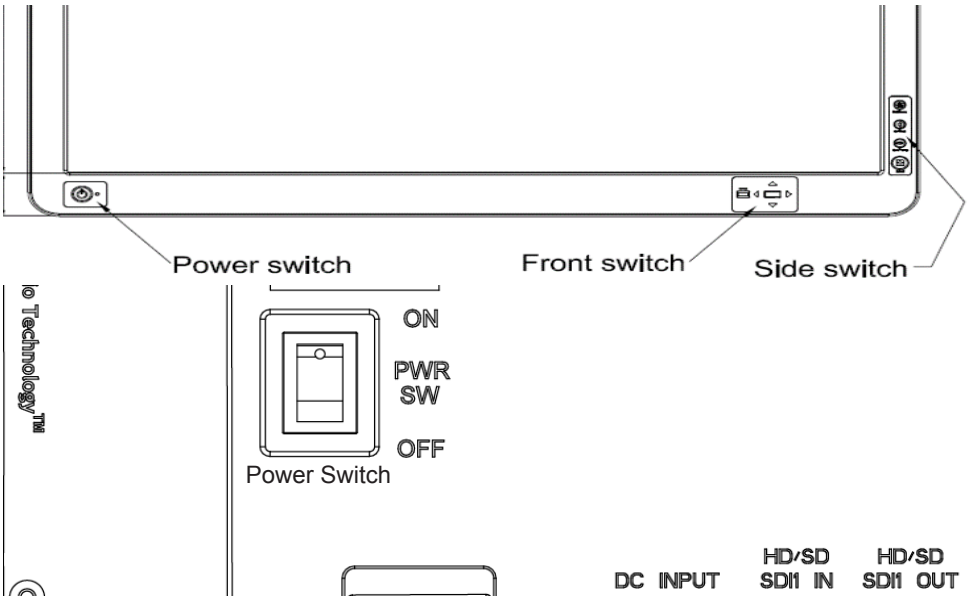

How to Access the Menu.

1. Press the Menu button to activate the OSD menu.
2. Press the Up or Down button to select icons. The icon will be highlighted when selected.
3. Press the right arrow button to go into another OSD menu.
4. Press the enter button to select sub menu and the right arrow or left arrow button to select the function.
5. In order to exit from the OSD menu, choose the "Exit" icon. Press the menu button, then it will completely exit from the menu regardless of where you are.
6. Press the input button to enter the input menu. Push the Up or Down arrow to highlight the correct input and press enter to select the input.

OSD Section

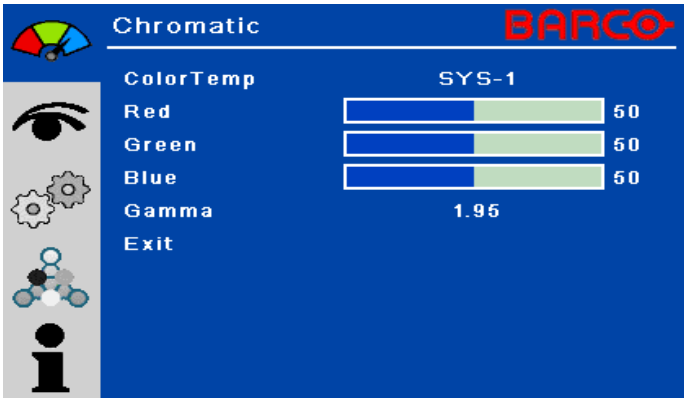

Main Menu

Chromatic Adjust Color Temp, Gamma

Visual Adjust Brightness, Contrast, Phase, Chroma, Sharpness-V, Sharpness-H

Setting Adjust Scale Mode, Color Space, Freeze Frame, Zoom / Pan, PIP, POP, PBP

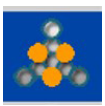

Advanced Adjust OSD Position Control, Screen Control, DPMS, Auto Source Select, Smart Select, Restore Factory, Key Lock, Overscan

Information User Customer Entry, Serial Number, Runtime, Input Format, Exit

OSD Section

Chromatic

Color Temp	Change the Color Temperature - D65, D93, SYS-1, SYS-2 Red 0~100 Green 0~100 Blue 0~100
Gamma	Change the Gamma Value - 1.8, 1.9, 1.95, 2.1, 2.1S, 2.2, 2.3, 2.4, 2.4S, S0, Radiograph
Exit	Exit the Menu

Visual

Brightness	Adjust the Brightness of Panel (Range 0 - 100)
Contrast	Adjust the Contrast of Video (Range 0 - 100)
Phase	Adjust the Phase of Video (Range 0 - 100) ***Available for Y/C and HD/SD SDI1 only**
Chroma	Adjust the Chroma of Video (Range 0 - 100) ***Available for Y/C and HD/SD SDI1 only**
Sharpness-V	Set the Sharpness of Vertical Image (Range 0 - 20)
Sharpness-H	Set the Sharpness of Horizontal Image (Range 0 - 20)
Exit	Exit the Menu

OSD Section

Setting

Scale Mode	Change the Scale Mode - Fill all, One to One, Vertical - Fill, Horizontal - Fill, Fill aspect ratio
Color Space	Change Color Space Between RGB and YUV
Freeze Frame	Off / On Freeze Frame
Zoom / Pan	Activate zoom/pan OSD
PIP	Activate PIP Menu
POP	Activate POP Menu
PBP	Activate PBP Menu
Exit	Exit the Menu

Sub menu of PIP

Mode	PIP Mode ON / OFF
Source	PIP Sub Screen Source - DVI-I, HD/SD SDI1, HD/SD SDI2 Component/RGBs, HD15, Y/C
Position	PIP Sub Screen Position - Top L, Top R, Bottom L, Bottom R
Size	PIP Sub Screen Size - Small, Medium, Large
Blending	PIP Sub Screen Blending (Range 0 - 20)
Swap	PIP Sub Screen Swap
Exit	Exit the Menu

Sub menu of PBP

Mode	PBP Mode ON / OFF
Source	PBP Sub Screen Source - DVI-I, HD/SD SDI1, HD/SD SDI2 Component/RGBs, HD15, Y/C
Swap	PBP Sub Screen Swap
Exit	Exit the Menu

OSD Section

Sub menu of POP

Mode	POP Mode ON / OFF
Source	POP Sub Screen Source - DVI-I, HD/SD SDI1, HD/SD SDI2 Component/RGBs, HD15, Y/C
Position	POP Sub Screen Position - Top L, Top R, Bottom L, Bottom R
Size	POP Sub Screen Size - Small, Medium, Large
Blending	POP Sub Screen Blending (Range 0 - 20)
Swap	POP Sub Screen Swap
Exit	Exit the Menu

OSD Section

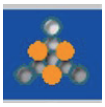

Advanced

OSD Position Control	Change the OSD Menu - H and V Position, Background, OSD Time Out, Language
Screen Control	Control and Adjust H and V position, Freqency, Phase, Noise Reduction, Motion Offset
DPMS	Change the DPMS - Off, 60 min, 90 min, 120 min, Normal
Auto Source Select	Adjust Auto Source Select Between On and Off
Smart Select	Enable / Disable Smart Select Sub Menu - Model A, Model B Model C, Model D
Restore Factory	Changes All OSD Value to Factory Outgoing Status (associated with the Color Temperatures are factory calibrated with a consequent reduction of the maximum luminance compared to Native Color Temperature.)
Key Lock	Set to Key Lock Mode
Overscan	Adjust Overscan Ratio - Off, Step 1, Step 2, Step 3, Step 4, Step 5, Step 6, Step 7
Exit	Exit the Menu

OSD Section

Sub Menu of OSD Control

H-position	Adjust OSD H - Position (Range 0 - 100)
V-position	Adjust OSD V - Position (Range 0 - 100)
Back ground	Adjust Transparency of OSD Background (Range 0 - 20)
OSD Timeout	Adjust OSD timeout - 5s, 10s, 15s, 20s, 1m, 2m
Language	OSD Language - English, Japanese, Chinese, Korean, French, German
Exit	Exit the Menu

Sub menu of Screen Control

H-Position	Adjust Screen H - Position (Range 0 - 100) ***Available for HD15, HD/SD SDI1 Component/RGBs**
V-Position	Adjust screen V - Position (Range 0 - 100) ***Available for HD15, HD/SD SDI1 Component/RGBs**
Frequency	Adjust Frequency (Range 0 - 100) ***Available for HD15**
Phase	Adjust Phase (Range 0 - 100) ***Available for HD15**
Noise Reduction	Noise Reduction (Range 0 - 31)
Motion Offset	Motion Offset (Range 0 - 100)
Exit	Exit the Menu

Information

Custom Entry	Change the User or Monitor's Name Custom Entry Row 1, Custom Entry Row 2
SN	Display the Serial Number
Runtime	Display the Total Runtime
Input Format	Display the Current input Resolution and Vertical Frequency
Exit	Exit the Menu

TROUBLESHOOTING

Before sending your LCD monitor for servicing, please check the troubleshooting list below to see if you can self-diagnose the problem.

Problems	Current Status	Remedy
No Picture	Power LED ON	· Using OSD, adjust brightness and contrast to maximum or reset to their default settings.
	Power LED OFF	· Check the Standby Power Button and Power switch.
		· Check if AC power cord is properly connected to the AC adapter.
	Power LED Blinking	· Check if video signal cable is properly connected at the back of monitor.
		· Check if the power to computer system is ON.
Abnormal Picture	Unstable Picture	· Check if the specification of graphics adapter and monitor is in compliance which may be causing the input signal frequency mismatch.
	Display is missing, center shift, or too small or too large in display size	· Using the Screen Control Menu, adjust the Phase, Frequency, Horizontal, and Vertical settings in order to correct the display image.

Specification*

Model	AMM240ED		
Diagonal	24.07 inches (611.32) diagonal		
Resolution	1920 (H) x 1200 (V) @ 60hz		
Pixel Pitch	0.270mm x 0.270mm		
Display Color	16.7M colors		
Viewing Angle	H: 178°, V: 178°		
Brightness	300 cd/m² (typical)		
Contrast ratio	1000:1 (typical)		
Dimension	570 (W) x 386.8 (H) x 63.2 (D) mm		
Color Gamut	sRGB 100%		
LCD Response Time	14msec (Typ.)		
Input			
HD/SD SDI 1	BNC x 1	HD/SD SDI 2 (optional)	BNC x 1
	0.27~2.97Gb/s Serial input data rate		0.27~2.97Gb/s Serial input data rate
	500~1100mVp-p Serial input swing		720~880mVp-p Serial input Voltage swing
HD15	15p D-Sub (female)	DVI-I	DVI-I 24+5 pin (female)
	Video: 0.7 ± 0.1 VP-p H/V Sync: TTL Level (V high ≥2.3V, V low ≤0.5V)		TMDS Level
	Horizontal Frequency 30~80KHz Vertical Frequency 50~85Hz		MAX. 162MHz
	MAX. 162MHz	**Output**	
Component/RGBs	15p D-Sub (female) (BNCx4 to HD15 Cable	HD/SD SDI	BNC x 1 (75 ohm ±5%)
	RGB: 0.7 ± 0.1 Vp-p		0.27~2.98Gb/s Serial output data rate
	Composite Sync : 0.3Vp-p ~ 5Vp-p H/V SYNC : TTL Level		350~600mVp-p Serial output swing
Y/C	Mini Din 4-pin	DVI-I	DVI-I 24+5 pin (female)
	NTSC, PAL Color standard		TMDS Level
	Luminance : 1.0± 0.1VP (Video :0.7Vp-p / Sync : 0.3Vp-p) Chrominance : 0.3 ± 0.03Vp-p		MAX. 162MHz
General			
Power Adaptor	AC 100 ~ 240V 50-60Hz		
	DC 24V, 2.7A		
Power Consumption	40W		
Package Dimension	665 x 240 x 640 (H)		
Weight	Monitor : 7.35Kg (Without cable cover, Without stand)		
	AC adaptor : 410g		
VESA Mounting	75mm x 100mm		
Operating/Storage Environment			
Operating Temperature	50° ~ 104°F (10° - 40°C)		
Operating Humidity	25% ~ 75%, non-condensing		
Storage Temperature	-0° ~ 140°F (-18° - 60°C)		
Storage Humidity	15 ~ 90%RH (without condensation)		
Compliance &Certification			
Safety	UL(ANSI/AAMI ES 60601-1), cUL(CAN/CSA-C22.2 No. 60601-1), CE(EN 60601-1, IEC 60601-1), AS/NZS 3200-1-0, CCC(GB4943.1), CB-ITE (IEC 60950-1), IP22 Compliance		
EMC	FCC(Part 15 Class B), CE(EN 60601-1-2, IEC 60601-1-2), AS/NZS 3200-1-2, VCCI(Class B), CCC(GB9254, GB17625.1)		
Optional Module			
DC Extension Cable	5ft, 15ft, 75ft length		
Base Stand	Adjustable high, swivel and tilt base stand		

* All contents are subject to change without notice.
**Brightness shown is without touch screen or A/R filter installed.

⎓		: Direct Current
CLASSIFIED c UL us Medical Equipment	MEDICAL EQUIPMENT WITH RESPECT TO ELECTRIC SHOCK, FIRE AND MECHANICAL HAZARDS ONLY IN ACCORDANCE WITH ANSI/AAMI ES 60601-1 and CAN/CSA C22.2 No. 60601-1	: UL approval mark according to the safety standard for Medical equipment

This monitor is intended for use in Health Care Facilities model AMM240ED

Equipment is not suitable for use in the presence of flammable anesthetic mixture with air or with oxygen or nitrous oxide.

No user serviceable parts inside, ask qualified personnel when accessing inside.

For disposal of waste product, follow the requirement of local code.

Electrical input rating: 24V DC 2.7A

Classification

Type of protection against electric shock: Class I Equipment.

Degree of protection against the ingress of water: IP22 compliance.

Mode of operation: Continuous

This monitor has been tested to comply with IEC/EN 60601-1, IEC/EN60601-1-2 and is certified by UL to medical standard ANSI/AAMI ES 60601-1(UL/cUL Mark).

Because many medical offices are located in residential areas, this monitor, in addition to the medical requirements, has also been tested and found to comply with the limits for FCC Class B computing devices in a typically configured system. It is the system integrator or configurer's responsibility to test and ensure that the entire system complies with applicable EMC laws.

Environmental conditions for transport and storage:
- Temperature range within -4° to 140° F (-20° to 60°C)
- Relative humidity range within 10% to 85%
- Atmospheric pressure range within 500 to 1060 hPa.

Electromagnetic Compatibility

Like other electrical medical equipment, the AMM240ED requires special precautions to ensure electromagnetic compatibility with other electrical medical devices. To ensure electromagnetic compatibility (EMC), the AMM240ED must be installed and operated according to the EMC information provided in this manual.

Note The AMM240ED has been designed and tested to comply with IEC 60601-1-2:2014 requirements for EMC with other devices.

Caution Portable and mobile RF communications equipment may affect the normal function of the AMM240ED.

Warning Do not use cables or accessories other than those provided with the AMM240ED, as this may result in increased electromagnetic emissions or decreased immunity to such emissions.

Warning If the AMM240ED is used adjacent to or stacked with other equipment, observe and verify normal operation of the AMM240ED in the configuration in which it will be used prior to using it in a surgical procedure. Consult the tables below for guidance in placing the AMM240ED.

Manufacturer's declaration - electromagnetic emission

The Model AMM240ED is intended for use in the electromagnetic environment specified below. The customer or the user of AMM240ED should assure that it is used in such an environment.		
Emission test	**Compliance**	**Electromagnetic environment - guidance**
RF emissions CISPR 11	Group 1	The Model AMM240ED uses RF energy only for its internal function. Therefore, its RF emissions are very low and are not likely to cause any interference in nearby electronic equipment
RF emissions CISPR 11	Class B	AMM240ED is suitable for use in all establishments, including domestic establishments and those directly connected to the public low-voltage power supply network that supplies buildings used for domestic purposes
Harmonic emissions IEC61000-3-2	Class A	
Voltage Fluctuations IEC61000-3-3	Complies	

Manufacturer's Declaration - Electromagnetic Immunity

The Model AMM240ED is intended for use in the electromagnetic environment specified below. The customer or the user of AMM240ED should assure that it is used in such an environment.			
Immunity Test	**IEC 60601 Test Level**	**Compliance Level**	**Electromagnetic environment - guidance**
Electrostatic discharge (ESD) IEC61000-4-2	± 8 kV contact ± 2 kV, ± 4 kV, ± 8 kV, ± 15 kV air		Floors should be wood, concrete or ceramic tile. If floors are covered with synthetic material, the relative humidity should be at least 30%.
Electrical fast transient /burst IEC61000-4-4	± 2 kV 100 kHz repetition frequency		Mains power quality should be that of a typical commercial or hospital environment.
Surge IEC61000-4-5	± 0,5 kV, ± 1 kV, ± 2 kV		Mains power quality should be that of a typical commercial or hospital environment.

Power frequency (50/60Hz) magnetic field IEC 61000-4-8	3.0 A/m 50 Hz or 60 Hz	3.0 A/m 50 Hz or 60 Hz	Power frequency magnetic fields should be at levels characteristic of a typical location in a typical commercial or hospital environment.
Voltage dips, short interruptions and voltage variations on power supply input lines IEC61000-4-11	0 % U_T ; 0,5 cycle At 0° . 45°, 90°, 135°, 180°, 225°, 270°, and 315° q)		Mains power quality should be that of a typical commercial or hospital environment. If the user of the AMM240ED image intensifier requires continued operation during power mains interruptions, it is recommended that the AMM240ED image intensifier be powered from an uninterruptible power supply or a battery.
	0% U_T; 1 cycle and 70 % U_t ; 25/30 cycles Single phase: at 0°		
	0 % U_t ; 250/300 cycle		
Note: Ut is the A.C. mains voltage prior to application of the test level.			

Manufacturer's Declaration - Electromagnetic Immunity

The Model AMM240ED is intended for use in the electromagnetic environment specified below.
The customer or the user of AMM240ED should ensure that it is used in such an environment.

Immunity Test	IEC 60601 Test Level	Compliance Level	Electromagnetic environment - guidance
Conducted RF IEC61000-4-6 Radiated RF IEC 61000-4-3	3 V 0,15 MHz - 80 MHz 6V in ISM and amature radio bands between 0,15 MHz and 80 Mhz 80 % AM at 1 kHz 10 V/m 80 MHz - 2,7 GHz 80% AM at 1 kHz	3 V 0,15 MHz - 80 MHz 6V in ISM and amature radio bands between 0,15 MHz and 80 Mhz 80 % AM at 1 kHz 10 V/m 80 MHz - 2,7 GHz 80% AM at 1 kHz	Portable and mobile RF communications equipment should be used no closer to any part of the **AMM240ED**, including cables, than the recommended separation distance calculated from the equation applicable to the frequency of the transmitter. **Recommended Separation Distance** 0.15 MHz to 80 MHz $d = \left[\frac{3,5}{V_1}\right]\sqrt{P}$ 80 MHz to 800 MHz $d = \left[\frac{3,5}{E_1}\right]\sqrt{P}$ 800 MHz to 2.5 GHz $d = \left[\frac{7}{E_1}\right]\sqrt{P}$ where ***P*** is the maximum oputput power rating of the transmitter in watts (**W**) according to the transmitter manufacturer and *d* is the recommended separation distance in meters (**m**). Field strengths from fixed RF transmitters, as deter-mined by an electromagnetic site survey (**a**), should be less than the compliance level in each frequency range (**b**).Interferency may occur in the vicinity of equipment marked with the follwing symbol:
NOTE 1: At 80MHz and 800MHz, the higher frequency range applies.			
NOTE 2: These guidelines may not apply in all situations. Electromagnetic propagation is affected by absorption and reflection from structures, objects, and people.			
(a) Field strengths from fixed transmitters, such as base stations for radio (cellular/cordless) telephones and land mobile radios, amateur radio, AM and FM radio broadcast and TV broadcast, cannot be predicted theoretically with accuracy. To assess the electromagnetic environment due to fixed RF transmitters, an electromagnetic site survey should be considered. If the measured field strength in the location in which the AMM240ED is used exceeds the applicable RF compliance level above, the AMM240ED should be observed to verify normal operation. If abnormal performance is observed, additional measures may be necessary, such as reorienting or relocating the AMM240ED. (b) Over the frequency range 150kHz to 80MHz, field strengths should be less than [V1] V/m.			

Recommended Separation Distances Between Portable and Mobile RF Communications Equipement and the AMM240ED System			
The AMM240ED system is intended for use in an electromagnetic environment in which radiated RF disturbances are controlled. The user of the AMM240ED system can help prevent electromagnetic interference by maintaining a minimum distance between portable and mobile RF communications equipment (transmitters) and the AMM240ED system as recommended below, according to the maximum output power of the communications equipment.			
Rated maximum output power (W) of transmitter	**Separation distance (m) according to frequency of transmitter**		
	150kHz to 80MHz $d=1.17\sqrt{P}$	80MHz to 800MHz $d=1.17\sqrt{P}$	800MHz to 2.5GHz $d=2.33\sqrt{P}$
0.01	0.12	0.12	0.23
0.1	0.37	0.37	0.74
1	1.17	1.17	2.33
10	3.70	3.70	7.37
100	11.70	11.70	23.30
For transmitters rated at a maximum output power not listed above, the recommended separation distance (d) in meters (m) can be estimated using the equation applicable to the frequency of the transmitter, where P is the maximum output power rating of the transmitter in watts (W) according to the transmitter manufacturer.			
NOTE 1: At 80 MHz and 800 MHz, the separation distance for the higher frequency range applies.			
NOTE 2: These guidelines may not apply in all situations. Electromagnetic propagation is affected by absorption and reflection from structures, objects, and people.			

Dimension Drawing (mm) of AC Adapter

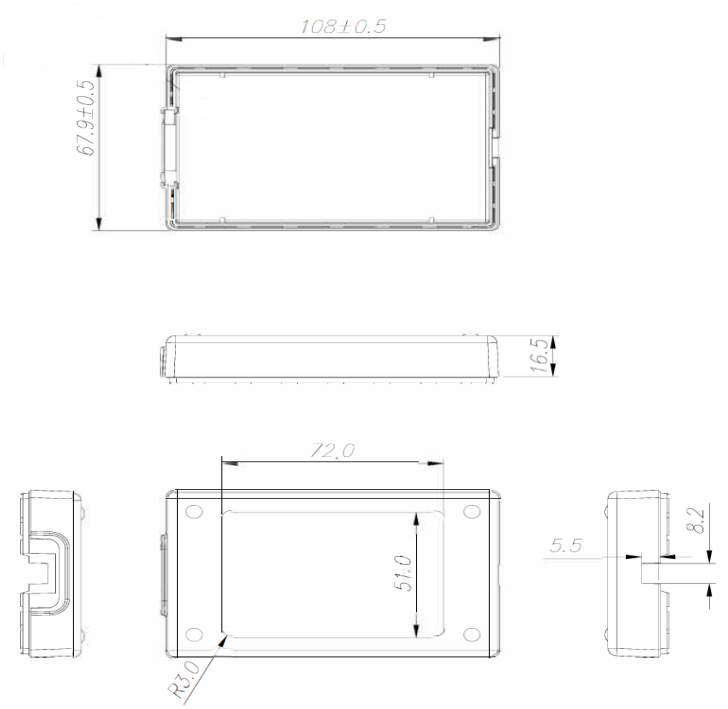

Dimension Drawing (mm) of AMM240ED

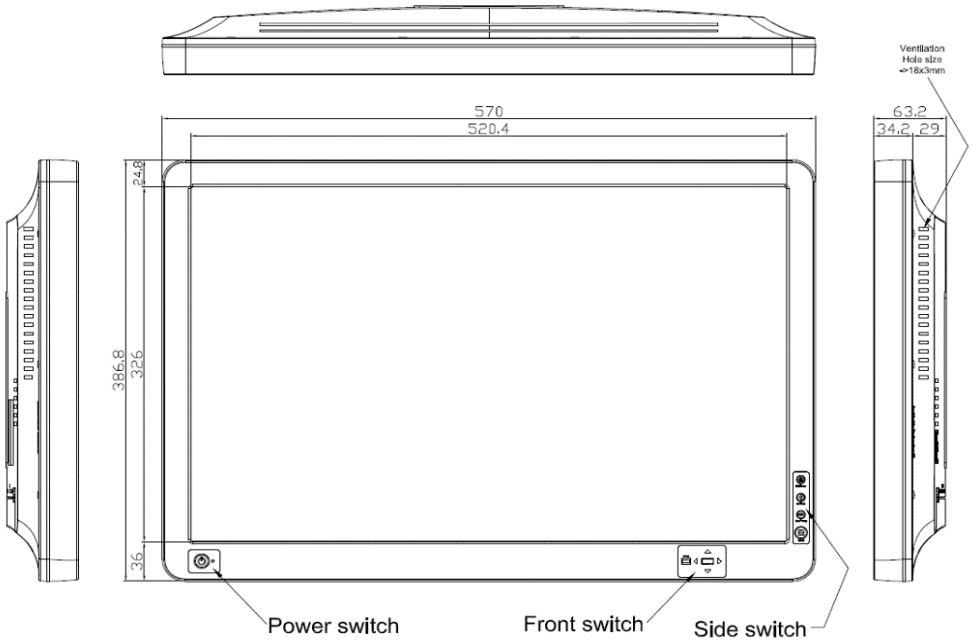

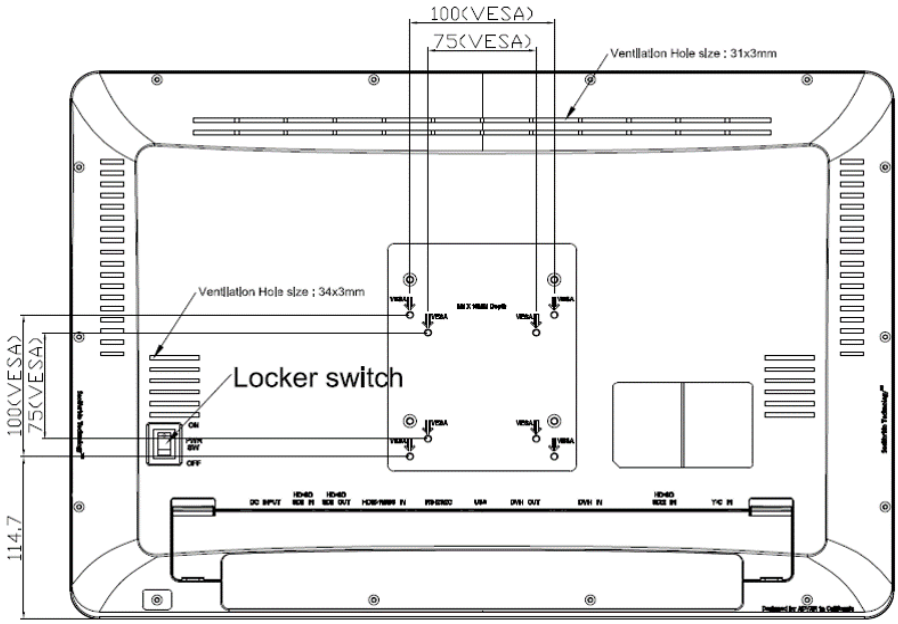

Connectors

DC Input

Connector Jack Power Input

Pin	Description	Pin	Description
1	GND	4	NC
2	GND	5	24V Input
3	24V Input		

Video Input

24 Pin DVI-I In Connector.
DDWG or Equivalent Connector.

Pin	Description	Pin	Description	Pin	Description
1	T.M.D.S. Data2-	9	T.M.D.S. Data1-	17	T.M.D.S. Data0-
2	T.M.D.S. Data2+	10	T.M.D.S. Data1+	18	T.M.D.S. Data0+
3	T.M.D.S. Data2 Shield	11	T.M.D.S. Data1 Shield	19	T.M.D.S. Data0 Shield
4	NC	12	NC	20	NC
5	NC	13	NC	21	NC
6	DDC Clock	14	+5V Power	22	T.M.D.S. Clock Shield
7	DDC Data	15	Ground (for +5V	23	T.M.D.S. Clock+
8	NC	16	Hot Plug Detect	24	T.M.D.S. Clock-

Video Input

24 Pin DVI-I Out Connector.
DDWG or Equivalent Connector.

Pin	Description	Pin	Description	Pin	Description
1	T.M.D.S. Data2-	9	T.M.D.S. Data1-	17	T.M.D.S. Data0-
2	T.M.D.S. Data2+	10	T.M.D.S. Data1+	18	T.M.D.S. Data0+
3	T.M.D.S. Data2 Shield	11	T.M.D.S. Data1 Shield	19	T.M.D.S. Data0 Shield
4	NC	12	NC	20	NC
5	NC	13	NC	21	NC
6	DDC Clock	14	+5V Power	22	T.M.D.S. Clock Shield
7	DDC Data	15	Ground (for +5V	23	T.M.D.S. Clock+
8	NC	16	Hot Plug Detect	24	T.M.D.S. Clock-

Video Input

HD/SD SDI1 IN Connector.

Pin	Description	Pin	Description
1	SDI IN	2	GND

Video Input

HD/SD SDI1 Out Connector.

Pin	Description	Pin	Description
1	SDI Out	2	GND

Video Input
HD 15/RGBS IN Connector.

Pin	Description	Pin	Description	Pin	Description
1	RED	6	GND-RED	11	GND
2	GREEN	7	GND-GREEN	12	DDC SDA
3	BLUE	8	GND-BLUE	13	HSYNC(CS)
4	GND	9	G5V	14	VSYNC
5	GND	10	GND	15	DDC SCL

Signal Input
RS232C Signal Connector.

Pin	Description	Pin	Description
1	NC	2	RX
3	TX	4	NC
5	GND	6	NC
7	NC	8	NC
9	NC		

Signal Input
USB Signal Connector.

Pin	Description	Pin	Description
1	Vcc(5V)	2	NC
3	NC	4	GND

Video Input
HD/SD SDI2 IN Video Connector.

Pin	Description	Pin	Description
1	SDI Input	2	GND

Video Input
Y/C IN Video Connector.

Pin	Description	Pin	Description
1	GND	2	GND
3	Chroma_In	4	Luma_In

Description of Warranty

BARCO warrants to the first Buyer (Buyer) that the product purchased when shipped in its original container will conform to BARCO specifications, and to any BARCO approved specifications furnished to BARCO by the Buyer, and will be free of defects in materials and workmanship. BARCO warrants that the product purchased is manufactured from new components which meet BARCO standards, quality and specifications.

Subject to the conditions and limitations set forth below, BARCO will, at its option, either repair any component of its products that prove defective by reason of improper workmanship or materials or BARCO has the exclusive right to replace with refurbished units or with an equivalent product. BARCO warrants that the components used for repair, refurbished units or equivalent product will meet BARCO standards, quality and specifications.

Commencement and Duration of Warranty
The product purchased will be warranted for a period of eighteen (18) months (excluding the LCD panel, touch screen, and the protection filter) from the date of shipment.

LCD panels and touch screens are warranted for a period of twelve (12) months from the date of shipment.

Protection filters are not warranted as damage to the protection filter is considered to be normal wear and tear and can be replaced at Buyer's cost.

Components used for repair, refurbished units or equivalent product will be warranted for a period of twelve (12) months from the date of repair.

Limitation of Warranty
This limited warranty does not cover any damage to this product or other non-BARCO products that results from any of the following: improper installation or operation; accident; abuse; misuse; natural disaster; war; insufficient or excessive electrical supply; abnormal mechanical or environmental conditions; any unauthorized disassembly, repair or modification; normal wear and tear; tampering by anyone other than an BARCO engineer or an BARCO Authorized Service Center (ASC); the use of supplies, consumable items and conditions beyond the control of BARCO, such as common carrier provided equipment and/or facilities; operation of BARCO product in excess of the specifications. This limited warranty also does not apply to any product that has not been handled or packaged correctly, that has been sold as second-hand or has been resold contrary to the US export regulations, on which the original identification information (i.e. serial number, rating and/or warranty label) has been altered, obliterated or removed.

In Warranty

BARCO or its ASC will repair or replace if defective in material or workmanship without cost, for a period of eighteen (18) months, (LCD panels and touch screens for a period of twelve (12) months) after the date of shipment.

Buyer must notify BARCO or its ASC of the defect before expiration of the warranty period, and request an RMA number. If the configuration has been modified in any manner, the product must be returned to its original configuration before any warranty service will be performed by BARCO or its ASC. No goods are to be returned to BARCO or its ASC without prior authorization. Buyer will be responsible for packaging (preferably original container) and shipping the defective goods to BARCO or its ASC, shipping charges prepaid.

BARCO or its ASC will return the in warranty product, at no cost to the buyer.

Out-of-Warranty

BARCO or its ASC will repair or replace if defective in material or workmanship with fee, any product which the warranty period has expired (out-of-warranty).

Buyer must notify BARCO or its ASC of the defect and request an RMA number. If the configuration has been modified in any manner, the product must be returned to its original configuration before any service will be performed by BARCO or its ASC. No goods are to be returned to BARCO or its ASC without prior authorization. Buyer will be responsible for packaging (preferably original container) and shipping the defective goods to BARCO or its ASC, shipping charges prepaid.

BARCO or its ASC will return the out-of-warranty product, at cost to the buyer.

Product End of Life (EOL)

In the event of an RMA of an EOL product(s), BARCO will hold or store major components of its products for a period of five (5) years, after the EOL of its products. BARCO shall continue to perform the service of its products as long as BARCO holds or stores said components of the products, with reasonable charge.

The forgoing Warranty and Out-of-Warranty terms apply.

Disclaimer

THE FORGOING IS THE COMPLETE WARRANTY FOR BARCO PRODUCTS AND SUPERSEDES ALL OTHER WARRANTIES AND REPRESENTATIONS, WHETHER ORAL OR WRITTEN. EXCEPT AS EXPRESSLY SET FORTH ABOVE, NO OTHER WARRANTIES ARE MADE WITH RESPECT TO BARCO PRODUCTS AND BARCO EXPRESSLY DISCLAIMS ALL WARRANTIES NOT STATED HEREIN, INCLUDING, TO THE EXTENT PERMITTED BY APPLICABLE LAW, ANY WARRANTY THAT MAY EXIST UNDER NATIONAL, STATE, PROVINCIAL OR LOCAL LAW INCLUDING BUT NOT LIMITED TO ANY IMPLIED WARRANTY ON NON-INFRINGEMENT, MERCHANTABILITY OR FITNESS FOR A PARTICULAR PURPOSE. ALL WARRANTIES, WHETHER EXPRESS OR IMPLIED, ARE LIMITED TO THE PERIODS OF TIME SET FORTH ABOVE. SOME STATES OR OTHER JURISDICTIONS DO NOT ALLOW THE EXCLUSION OF IMPLIED WARRANTIES OR LIMITATIONS ON HOW LONG AN IMPLIED WARRANTY LASTS, SO THE ABOVE LIMITATIONS MAY NOT APPLY.

BARCO'S TOTAL LIABILITY UNDER THIS OR ANY OTHER WARRANTY, EXPRESSED OR IMPLIED, IS LIMITED TO REPAIR OR REPLACEMENT, AND ARE THE SOLE AND EXCLUSIVE REMEDIES FOR BREACH OF WARRANTY OR ANY OTHER LEGAL THEORY. TO THE FULLEST EXTENT PERMITTED BY APPLICABLE LAW, BARCO SHALL NOT BE LIABLE TO THE PURCHASER OR END USER CUSTOMER OF AN BARCO PRODUCT FOR ANY DAMAGES, EXPENSES, LOST DATA, LOST REVENUES, LOST SAVINGS, LOST PROFITS, OR ANY OTHER INCIDENTAL OR CONSEQUENTIAL DAMAGES ARISING FROM THE PURCHASE, USE OR INABILITY TO USE THE BARCO PRODUCT, EVEN IF BARCO HAS BEEN ADVISED OF THE POSSIBILITY OF SUCH DAMAGES. SOME STATES OR OTHER JURISDICTIONS DO NOT ALLOW THE EXCLUSION OR LIMITATION OF INCIDENTAL OR CONSEQUENTIAL DAMAGES, SO THE ABOVE LIMITATIONS MAY NOT APPLY.

THE LIMITED WARRANTY GIVES YOU SPECIFIC LEGAL RIGHTS, AND YOU MAY ALSO HAVE OTHER RIGHTS WHICH VARY FROM STATE TO STATE OR JURISDICTION TO JURISDICTION.

EC REP
Barco NV
President Kennedypark 35
8500 Kortrijk
Belgium

Barco, Inc.
47817 Fremont Blvd. Fremont, CA 94538, USA
Tel : 1 510 490 1005
Fax : 1 510 490 1151