ANSI/IEEE Std. C95.1-1992

in accordance with the requirements of

FCC Report and Order: ET Docket 93-62, and OET Bulletin 65 Supplement C

FCC TEST REPORT

For

Class 1 Bluetooth USB Adapter

Trade Name: Motorola

Model: PC850

Issued to

Microlink Communications Inc.
3F, No. 196, Hsinhu 3rd Rd., Neihu Taipei 114,
Taiwan R.O.C.

Issued by

Compliance Certification Services Inc.
No. 11, Wu-Kung 6 Rd, Wu-Ku Hsiang,
Wu-Ku Industrial District, Taipei Hsien, (248) Taiwan.
TEL: 886-2-2299-9720
FAX: 886-2-2299-9721

Note: *This report shall not be reproduced except in full, without the written approval of Compliance Certification Services Inc. This document may be altered or revised by Compliance Certification Services Inc. personnel only, and shall be noted in the revision section of the document.*

TABLE OF CONTENTS

1. CERTIFICATE OF COMPLIANCE (SAR EVALUATION) 3
2. EUT DESCRIPTION 4
3. REQUIREMENTS FOR COMPLIANCE TESTING DEFINED BY THE FCC 5
4. DOSIMETRIC ASSESSMENT SYSTEM 5
4.1 MEASUREMENT SYSTEM DIAGRAM 6
4.2 SYSTEM COMPONENTS 7
5. EVALUATION PROCEDURES 9
6. MEASUREMENT UNCERTAINTY 13
7. EXPOSURE LIMIT 14
8. TYPICAL COMPOSITION OF INGREDIENTS FOR LIQUID TISSUE PHANTOMS . 14
9. MEASUREMENT RESULTS 15
9.1 SYSTEM PERFORMANCE CHECK 15
9.2 TEST LIQUID CONFIRMATION 17
9.3 EUT TUNE-UP PROCEDURES 19
9.4 SAR MEASUREMENTS RESULTS 20
10. EUT PHOTOS 22
11. EQUIPMENT LIST & CALIBRATION STATUS 23
12. FACILITIES 24
13. REFERENCES 24
14. ATTACHMENTS 25

1. CERTIFICATE OF COMPLIANCE (SAR EVALUATION)

Date of Test: Feb. 14, 2005

Applicant:	Microlink Communications Inc. 3F, No. 196, Hsinhu 3rd Rd., Neihu Taipei 114, Taiwan, R.O.C.
Model Number / Trade Name:	PC850 / Motorola
Device Category:	PORTABLE DEVICES
Exposure Category:	GENERAL POPULATION/UNCONTROLLED EXPOSURE

Test Sample is a:	Production unit
Modulation type:	FHSS(GFSK)
Tx Frequency:	2402 ~ 2480 MHz
Max. O/P Power: (Conducted/Peak)	14.57 dBm
Max. SAR (1g):	0.144 W/kg
Application Type:	Certification
FCC Rule Part(s):	15C

Note:

This wireless portable device has been shown to be capable of compliance for localized specific absorption rate (SAR) for uncontrolled environment/general population exposure limits specified in ANSI/IEEE Std. C95.1-1992 and had been tested in accordance with the measurement procedures specified in FCC OET 65 Supplement C (released on 6/29/2001 see Test Report).

I attest to the accuracy of data. All measurements reported herein were performed by me or were made under my supervision and are correct to the best of my knowledge and belief. I assume full responsibility for the completeness of these measurements and vouch for the qualifications of all persons taking them.

Approved by:

Harris W. Lai
Executive Vice President
Compliance Certification Services Inc.

Reviewed by:

Chris Hsieh
Section Manager
Compliance Certification Services Inc.

2. EUT DESCRIPTION

Applicant:	Microlink Communications Inc. 3F, No.196, Hsinhu 3rd Rd., Neihu Taipei 114, Taiwan, R.O.C.
Model Number / Trade Name:	PC850 / Motorola
Device Category:	PORTABLE DEVICES
Exposure Category:	GENERAL POPULATION/UNCONTROLLED EXPOSURE

Test Sample is a:	Production unit
Modulation type:	FHSS(GFSK)
Tx Frequency:	2402 ~ 2480 MHz
Max. O/P Power: (Conducted/Peak)	14.57 dBm
Max. SAR (1g):	0.144 W/kg
Application Type:	Certification
FCC Rule Part(s):	15C
Antennas:	**PCB**Ant.
Test Host:	IBM P/N: 2672-I8V S/N: 99KPZYN

3. REQUIREMENTS FOR COMPLIANCE TESTING DEFINED BY THE FCC

The US Federal Communications Commission has released the report and order “Guidelines for Evaluating the Environmental Effects of RF Radiation", ET Docket No. 93-62 in August 1996 [1]. The order requires routine SAR evaluation prior to equipment authorization of portable transmitter devices, including portable telephones. For consumer products, the applicable limit is 1.6 mW/g for an uncontrolled environment and 8.0 mW/g for an occupational/controlled environment as recommended by the ANSI/IEEE standard C95.1-1992 [6]. According to the Supplement C of OET Bulletin 65 “Evaluating Compliance with FCC Guide-lines for Human Exposure to Radio frequency Electromagnetic Fields", released on Jun 29, 2001 by the FCC, the device should be evaluated at maximum output power (radiated from the antenna) under “worst-case” conditions for normal or intended use, incorporating normal antenna operating positions, device peak performance frequencies and positions for maximum RF energy coupling.

4. DOSIMETRIC ASSESSMENT SYSTEM

These measurements were performed with the automated near-field scanning system DASY4 from Schmid & Partner Engineering AG (SPEAG). The system is based on a high precision robot (working range greater than 0.9 m) which positions the probes with a positional repeatability of better than ± 0.02 mm. Special E- and H-field probes have been developed for measurements close to material discontinuity, the sensors of which are directly loaded with a Schottky diode and connected via highly resistive lines to the data acquisition unit. The SAR measurements were conducted with the dosimetric probe EX3DV4-SN: 3554 (manufactured by SPEAG), designed in the classical triangular configuration and optimized for dosimetric evaluation. The probe has been calibrated according to the procedure with accuracy of better than ±10%. The spherical isotropy was evaluated with the procedure and found to be better than ±0.25 dB. The phantom used was the SAM Twin Phantom as described in FCC supplement C, IEEE P1528 and EN50361.

4.1 MEASUREMENT SYSTEM DIAGRAM

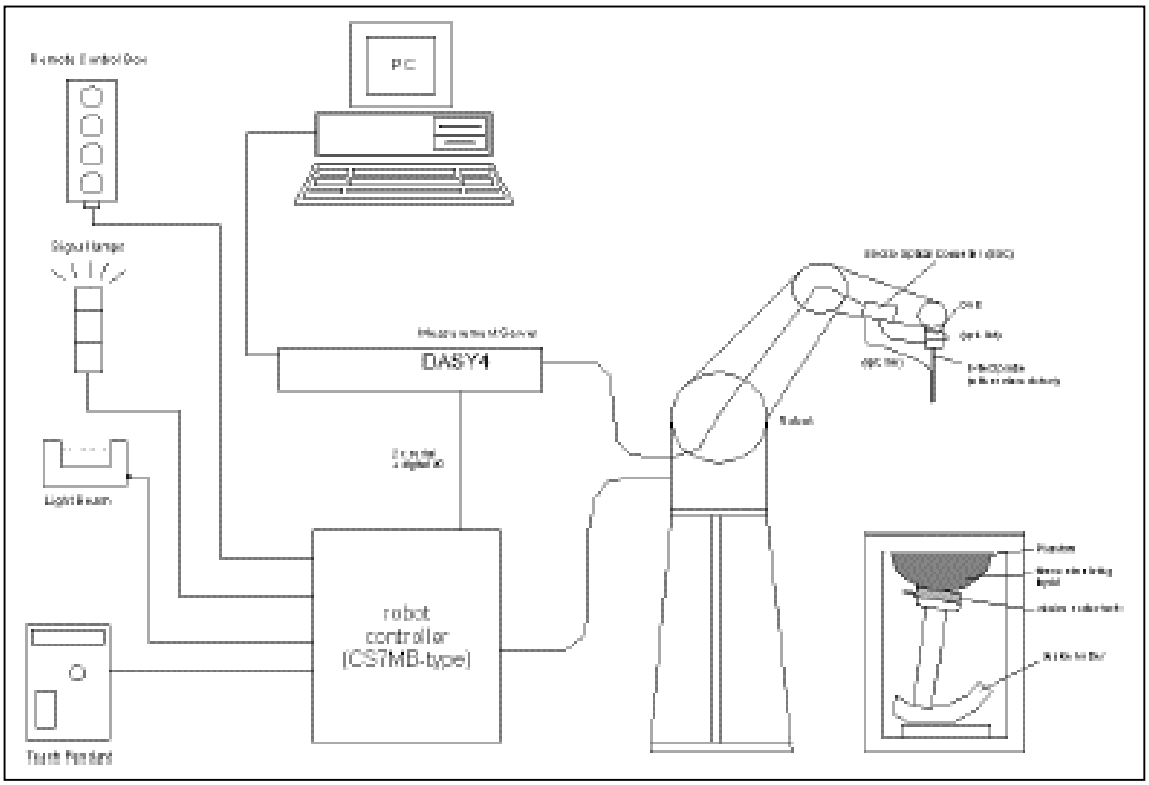

The DASY4 system for performing compliance tests consists of the following items:

- A standard high precision 6-axis robot (Stäubli RX family) with controller, teach pendant and software. An arm extension for accommodating the data acquisition electronics (DAE).
- A dosimetric probe, i.e., an isotropic E-field probe optimized and calibrated for usage in tissue simulating liquid. The probe is equipped with an optical surface detector system.
- A data acquisition electronics (DAE) which performs the signal amplification, signal multiplexing, AD-conversion, offset measurements, mechanical surface detection, collision detection, etc. The unit is battery powered with standard or rechargeable batteries. The signal is optically transmitted to the EOC.
- The Electro-optical converter (EOC) performs the conversion between optical and electrical of the signals for the digital communication to the DAE and for the analog signal from the optical surface detection. The EOC is connected to the measurement server.
- The function of the measurement server is to perform the time critical tasks such as signal filtering, control of the robot operation and fast movement interrupts.
- A probe alignment unit which improves the (absolute) accuracy of the probe positioning.
- A computer operating Windows 2000 or Windows XP.
- DASY4 software.
- Remote control with teach pendant and additional circuitry for robot safety such as warning lamps, etc.
- The SAM twin phantom enabling testing left-hand and right-hand usage.
- The device holder for handheld mobile phones.
- Tissue simulating liquid mixed according to the given recipes.
- Validation dipole kits allowing validating the proper functioning of the system.

4.2 SYSTEM COMPONENTS

DASY4 Measurement Server

The DASY4 measurement server is based on a PC/104 CPU board with a 166MHz low-power Pentium, 32MB chip disk and 64MB RAM. The necessary circuits for communication with either the DAE3 electronic box as well as the 16-bit AD-converter system for optical detection and digital I/O interface are contained on the DASY4 I/O-board, which is directly connected to the PC/104 bus of the CPU board.

The measurement server performs all real-time data evaluation for field measurements and surface detection, controls robot movements and handles safety operation.

The PC-operating system cannot interfere with these time critical processes. All connections are supervised by a watchdog, and disconnection of any of the cables to the measurement server will automatically disarm the robot and disable all program-controlled robot movements. Furthermore, the measurement server is equipped with two expansion slots which are reserved for future applications. Please note that the expansion slots do not have a standardized pinout and therefore only the expansion cards provided by SPEAG can be inserted. Expansion cards from any other supplier could seriously damage the measurement server. Calibration: No calibration required.

Data Acquisition Electronics (DAE)

The data acquisition electronics (DAE3) consists of a highly sensitive electrometer grade preamplifier with auto-zeroing, a channel and gain-switching multiplexer, a fast 16 bit AD converter and a command decoder and control logic unit. Transmission to the measurement server is accomplished through an optical downlink for data and status information as well as an optical uplink for commands and the clock. The mechanical probe mounting device includes two different sensor systems for frontal and sideways probe contacts. They are used for mechanical surface detection and probe collision detection. The input impedance of the DAE3 box is 200MOhm; the inputs are symmetrical and floating. Common mode rejection is above 80 dB.

EX3DV4 Isotropic E-Field Probe for Dosimetric Measurements

Construction:	Symmetrical design with triangular core Built-in shielding against static charges PEEK enclosure material (resistant to organic solvents, e.g., DGBE)
Calibration:	Basic Broad Band Calibration in air: 10-3000 MHz. Conversion Factors (CF) for HSL 900 and HSL 1800 CF-Calibration for other liquids and frequencies upon request.
Frequency:	10 MHz to > 6 GHz; Linearity: ± 0.2 dB (30 MHz to 3 GHz)
Directivity:	± 0.3 dB in HSL (rotation around probe axis) ± 0.5 dB in HSL (rotation normal to probe axis)
Dynamic Range:	10 µW/g to > 100 mW/g; Linearity: ± 0.2 dB (noise: typically < 1 µW/g)
Dimensions:	Overall length: 330 mm (Tip: 20 mm) Tip diameter: 2.5 mm (Body: 12 mm) Distance from probe tip to dipole centers: 1 mm
Application:	High precision dosimetric measurements in any exposure scenario (e.g., very strong gradient fields). Only probe which enables compliance testing for frequencies up to 6 GHz with precision of better 30%.

Interior of probe

E-Field probe EX3DV4

SAM Phantom (V4.0)

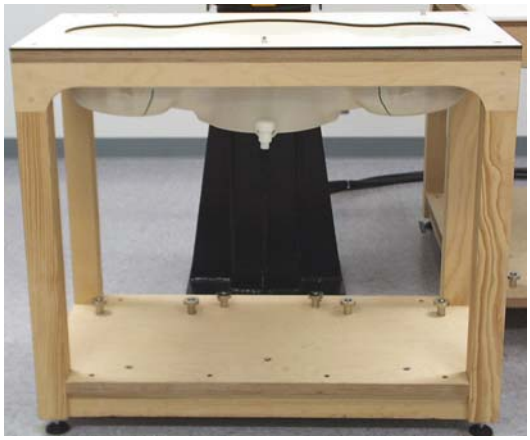

Construction: The shell corresponds to the specifications of the Specific Anthropomorphic Mannequin (SAM) phantom defined in IEEE 1528-200X, CENELEC 50361 and IEC 62209. It enables the dosimetric evaluation of left and right hand phone usage as well as body mounted usage at the flat phantom region. A cover prevents evaporation of the liquid. Reference markings on the phantom allow the complete setup of all predefined phantom positions and measurement grids by manually teaching three points with the robot.

Shell Thickness: 2 ±0.2 mm

Filling Volume: Approx. 25 liters

Dimensions: Height: 810mm; Length: 1000mm; Width: 500mm

Device Holder for SAM Twin Phantom

Construction: In combination with the Twin SAM Phantom V4.0 or Twin SAM, the Mounting Device (made from POM) enables the rotation of the mounted transmitter in spherical coordinates, whereby the rotation point is the ear opening. The devices can be easily and accurately positioned according to IEC, IEEE, CENELEC, FCC or other specifications. The device holder can be locked at different phantom locations (left head, right head, and flat phantom).

System Validation Kits

Construction: Symmetrical dipole with l/4 balun Enables measurement of feedpoint impedance with NWA Matched for use near flat phantoms filled with brain simulating solutions Includes distance holder and tripod adaptor.

Frequency: 450, 900, 1800, 2450, 5800 MHz

Return loss: > 20 dB at specified validation position

Power capability: > 100 W (f < 1GHz); > 40 W (f > 1GHz)

Dimensions: 450V2: dipole length: 270 mm; overall height: 330 mm
D900V2: dipole length: 149 mm; overall height: 330 mm
D1800V2: dipole length: 72 mm; overall height: 300 mm
D2450V2: dipole length: 51.5 mm; overall height: 300 mm
D5GHzV2: dipole length: 25.5 mm; overall height: 290 mm

5. EVALUATION PROCEDURES

DATA EVALUATION

The DASY4 post processing software (SEMCAD) automatically executes the following procedures to calculate the field units from the microvolt readings at the probe connector. The parameters used in the evaluation are stored in the configuration modules of the software:

Probe parameters:	- Sensitivity	$Norm_i$, a_{i0}, a_{i1}, a_{i2}
	- Conversion factor	$ConvF_i$
	- Diode compression point	dcp_i
Device parameters:	- Frequency	f
	- Crest factor	cf
Media parameters:	- Conductivity	σ
	- Density	ρ

These parameters must be set correctly in the software. They can be found in the component documents or be imported into the software from the configuration files issued for the DASY components. In the direct measuring mode of the multi-meter option, the parameters of the actual system setup are used. In the scan visualization and export modes, the parameters stored in the corresponding document files are used.

The first step of the evaluation is a linearization of the filtered input signal to account for the compression characteristics of the detector diode. The compensation depends on the input signal, the diode type and the DC-transmission factor from the diode to the evaluation electronics. If the exciting field is pulsed, the crest factor of the signal must be known to correctly compensate for peak power. The formula for each channel can be given as:

$$V_i = U_i + U_i^2 \cdot \frac{cf}{dcp_i}$$

with	V_i	= Compensated signal of channel i	(i = x, y, z)
	U_i	= Input signal of channel i	(i = x, y, z)
	cf	= Crest factor of exciting field	(DASY parameter)
	dcp_i	= Diode compression point	(DASY parameter)

From the compensated input signals the primary field data for each channel can be evaluated:

E-field probes: $$E_i = \sqrt{\frac{V_i}{Norm_i \bullet ConvF}}$$

H-field probes: $$H_i = \sqrt{Vi} \cdot \frac{a_{i10} + a_{i11} f + a_{i12} f^2}{f}$$

with	V_i	= Compensated signal of channel i	(i = x, y, z)
	$Norm_i$	= Sensor sensitivity of channel i	(i = x, y, z)
		$\mu V/(V/m)^2$ for E0field Probes	
	$ConvF$	= Sensitivity enhancement in solution	
	aij	= Sensor sensitivity factors for H-field probes	
	f	= Carrier frequency (GHz)	
	Ei	= Electric field strength of channel i in V/m	
	Hi	= Magnetic field strength of channel i in A/m	

The RSS value of the field components gives the total field strength (Hermitian magnitude):

$$E_{tot} = \sqrt{E_x^2 + E_y^2 + E_z^2}$$

The primary field data are used to calculate the derived field units.

$$SAR = E_{tot}^2 \cdot \frac{\sigma}{\rho \cdot 1000}$$

with SAR = local specific absorption rate in mW/g
E_{tot} = total field strength in V/m
σ = conductivity in [mho/m] or [Siemens/m]
ρ = equivalent tissue density in g/cm^3

Note that the density is normally set to 1 (or 1.06), to account for actual brain density rather than the density of the simulation liquid.

The power flow density is calculated assuming the excitation field as a free space field.

$$P_{pwe} = \frac{E_{tot}^2}{3770} \quad \text{or} \quad P_{pwe} = H_{tot}^2 \cdot 37.7$$

with P_{pwe} = Equivalent power density of a plane wave in mW/cm^2
E_{tot} = total electric field strength in V/m
H_{tot} = total magnetic field strength in A/m

SAR MEASUREMENT PROCEDURES

The procedure for assessing the peak spatial-average SAR value consists of the following steps:

- **Power Reference Measurement**

  The reference and drift jobs are useful jobs for monitoring the power drift of the device under test in the batch process. Both jobs measure the field at a specified reference position, at a selectable distance from the phantom surface. The reference position can be either the selected section's grid reference point or a user point in this section. The reference job projects the selected point onto the phantom surface, orients the probe perpendicularly to the surface, and approaches the surface using the selected detection method.

- **Area Scan**

  The area scan is used as a fast scan in two dimensions to find the area of high field values, before doing a finer measurement around the hot spot. The sophisticated interpolation routines implemented in DASY4 software can find the maximum locations even in relatively coarse grids. The scan area is defined by an editable grid. This grid is anchored at the grid reference point of the selected section in the phantom. When the area scan's property sheet is brought-up, grid was at to **15 mm by 15 mm** and can be edited by a user.

- **Zoom Scan**

  Zoom scans are used to assess the peak spatial SAR values within a cubic averaging volume containing 1 g and 10 g of simulated tissue. The default zoom scan measures **5x5x7** points within a cube whose base faces are centered around the maximum found in a preceding area scan job within the same procedure. If the preceding Area Scan job indicates more then one maximum, the number of Zoom Scans has to be enlarged accordingly (The default number inserted is 1).

- **Power Drift measurement**

  The drift job measures the field at the same location as the most recent reference job within the same procedure, and with the same settings. The drift measurement gives the field difference in dB from the reading conducted within the last reference measurement. Several drift measurements are possible for one reference measurement. This allows a user to monitor the power drift of the device under test within a batch process. In the properties of the Drift job, the user can specify a limit for the drift and have DASY4 software stop the measurements if this limit is exceeded.

- **Z-Scan**

  The Z Scan job measures points along a vertical straight line. The line runs along the Z-axis of a one-dimensional grid. A user can anchor the grid to the current probe location. As with any other grids, the local Z-axis of the anchor location establishes the Z-axis of the grid.

SPATIAL PEAK SAR EVALUATION

The procedure for spatial peak SAR evaluation has been implemented according to the IEEE1529 standard. It can be conducted for 1 g and 10 g.

The DASY4 system allows evaluations that combine measured data and robot positions, such as:

- maximum search
- extrapolation
- boundary correction
- peak search for averaged SAR

During a maximum search, global and local maximum searches are automatically performed in 2-D after each Area Scan measurement with at least 6 measurement points. It is based on the evaluation of the local SAR gradient calculated by the Quadratic Shepard's method. The algorithm will find the global maximum and all local maxima within -2 dB of the global maxima for all SAR distributions.

Extrapolation

Extrapolation routines are used to obtain SAR values between the lowest measurement points and the inner phantom surface. The extrapolation distance is determined by the surface detection distance and the probe sensor offset. Several measurements at different distances are necessary for the extrapolation.

Extrapolation routines require at least 10 measurement points in 3-D space. They are used in the Cube Scan to obtain SAR values between the lowest measurement points and the inner phantom surface. The routine uses the modified Quadratic Shepard's method for extrapolation. For a grid using 5x5x7 measurement points with 5mm resolution amounting to 343 measurement points, the uncertainty of the extrapolation routines is less than 1% for 1 g and 10 g cubes.

Boundary effect

For measurements in the immediate vicinity of a phantom surface, the field coupling effects between the probe and the boundary influence the probe characteristics. Boundary effect errors of different dosimetric probe types have been analyzed by measurements and using a numerical probe model. As expected, both methods showed an enhanced sensitivity in the immediate vicinity of the boundary. The effect strongly depends on the probe dimensions and disappears with increasing distance from the boundary. The sensitivity can be approximately given as:

$$S \approx S_o + S_b exp(-\frac{z}{a}) cos(\pi \frac{z}{\lambda})$$

Since the decay of the boundary effect dominates for small probes ($a \ll \lambda$), the cos-term can be omitted. Factors *Sb* (parameter Alpha in the DASY4 software) and *a* (parameter Delta in the DASY4 software) are assessed during probe calibration and used for numerical compensation of the boundary effect. Several simulations and measurements have confirmed that the compensation is valid for different field and boundary configurations.

This simple compensation procedure can largely reduce the probe uncertainty near boundaries. It works well as long as:

- the boundary curvature is small
- the probe axis is angled less than 30_ to the boundary normal
- the distance between probe and boundary is larger than 25% of the probe diameter
- the probe is symmetric (all sensors have the same offset from the probe tip)

Since all of these requirements are fulfilled in a DASY4 system, the correction of the probe boundary effect in the vicinity of the phantom surface is performed in a fully automated manner via the measurement data extraction during postprocessing.

6. MEASUREMENT UNCERTAINTY

UNCERTAINTY BUDGE ACCORDING TO IEEE P1528						
Error Description	**Uncertainty Value ±%**	**Probability distribution**	**Divisor**	**C_1 1g**	**Standard unc.(1g) ±%**	**V_1 or V_{eff}**
Measurement System						
Probe calibration	±4.8	normal	1	1	±4.8	∞
Axial isotropy of probe	±4.6	rectangular	√3	$(1-Cp)^{1/2}$	±1.9	∞
Sph. Isotropy of probe	±9.7	rectangular	√3	$(Cp)^{1/2}$	±3.9	∞
Probe linearity	±4.5	rectangular	√3	1	±2.7	∞
Detection Limit	±0.9	rectangular	√3	1	±0.6	∞
Boundary effects	±8.5	rectangular	√3	1	±4.8	∞
Readoutelectronics	±1.0	normal	1	1	±1.0	∞
Response time	±0.9	rectangular	√3	1	±0.5	∞
Integration time	±1.2	rectangular	√3	1	±0.8	∞
Mech Constrains of robot	±0.5	rectangular	√3	1	±0.2	∞
Probe positioning	±2.7	rectangular	√3	1	±1.7	∞
Extrap. And integration	±4.0	rectangular	√3	1	±2.3	∞
RF ambient conditiona	±0.54	rectangular	√3	1	±0.43	∞
Test Sample Related						
Device positioning	±2.2	normal	1	1	±2.23	11
Device holder uncertainty	±5	normal	1	1	±5.0	7
Power drift	±5	rectangular	√3	1	±2.9	∞
Phantom and Set up						
Phantom uncertainty	±4	rectangular	√3	1	±2.3	∞
Liquid conductivity	±5	rectangular	√3	0.6	±1.7	∞
Liquid conductivity	±5	rectangular	√3	0.6	±3.5/1.7	∞
Liquid permittivity	±5	rectangular	√3	0.6	±1.7	∞
Liquid permittivity	±5	rectangular	√3	0.6	±1.7	∞
Combined Standard Uncertainty					±12.14/11.76	
Coverage Factor for 95%		kp=2				
Expanded Standard Uncertainty					±24.29/23.51	

Table: Worst-case uncertainty for DASY4 assessed according to IEEE P1528.
The budge is valid for the frequency range 300 MHz to 6G Hz and represents a worst-case analysis.

7. EXPOSURE LIMIT

(A). Limits for Occupational/Controlled Exposure (W/kg)

Whole-Body	Partial-Body	Hands, Wrists, Feet and Ankles
0.4	8.0	2.0

(B). Limits for General Population/Uncontrolled Exposure (W/kg)

Whole-Body	Partial-Body	Hands, Wrists, Feet and Ankles
0.08	1.6	4.0

NOTE: ***Whole-Body SAR*** is averaged over the entire body, ***partial-body SAR*** is averaged over any 1 gram of tissue defined as a tissue volume in the shape of a cube. ***SAR for hands, wrists, feet and ankles*** is averaged over any 10 grams of tissue defined as a tissue volume in the shape of a cube.

Population/Uncontrolled Environments:

are defined as locations where there is the exposure of individuals who have no knowledge or control of their exposure.

Occupational/Controlled Environments:

are defined as locations where there is exposure that may be incurred by people who are aware of the potential for exposure, (i.e. as a result of employment or occupation).

NOTE
GENERAL POPULATION/UNCONTROLLED EXPOSURE
PARTIAL BODY LIMIT
1.6 W/kg

8. TYPICAL COMPOSITION OF INGREDIENTS FOR LIQUID TISSUE PHANTOMS

The following tissue formulations are provided for reference only as some of the parameters have not been thoroughly verified. The composition of ingredients may be modified accordingly to achieve the desired target tissue parameters required for routine SAR evaluation.

Ingredients (% by weight)	Frequency (MHz)									
	450		835		915		1900		2450	
Tissue Type	**Head**	**Body**	**Head**	**Body**	**Head**	**Body**	**Head**	**Body**	**Head**	**Body**
Water	**38.56**	**51.16**	**41.45**	**52.4**	**41.05**	**56.0**	**54.9**	**40.4**	**62.7**	**73.2**
Salt (NaCl)	**3.95**	**1.49**	**1.45**	**1.4**	**1.35**	**0.76**	**0.18**	**0.5**	**0.5**	**0.04**
Sugar	**56.32**	**46.78**	**56.0**	**45.0**	**56.5**	**41.76**	**0.0**	**58.0**	**0.0**	**0.0**
HEC	**0.98**	**0.52**	**1.0**	**1.0**	**1.0**	**1.21**	**0.0**	**1.0**	**0.0**	**0.0**
Bactericide	**0.19**	**0.05**	**0.1**	**0.1**	**0.1**	**0.27**	**0.0**	**0.1**	**0.0**	**0.0**
Triton X-100	**0.0**	**0.0**	**0.0**	**0.0**	**0.0**	**0.0**	**0.0**	**0.0**	**36.8**	**0.0**
DGBE	**0.0**	**0.0**	**0.0**	**0.0**	**0.0**	**0.0**	**44.92**	**0.0**	**0.0**	**26.7**
Dielectric Constant	**43.42**	**58.0**	**42.54**	**56.1**	**42.0**	**56.8**	**39.9**	**54.0**	**39.8**	**52.5**
Conductivity (S/m)	**0.85**	**0.83**	**0.91**	**0.95**	**1.0**	**1.07**	**1.42**	**1.45**	**1.88**	**1.78**

Salt: 99^{+}% Pure Sodium Chloride Sugar: 98^{+}% Pure Sucrose
Water: De-ionized, 16 $M\Omega^{+}$ resistivity HEC: Hydroxyethyl Cellulose
DGBE: 99^{+}% Di(ethylene glycol) butyl ether, [2-(2-butoxyethoxy)ethanol]
Triton X-100 (ultra pure): Polyethylene glycol mono [4-(1, 1, 3, 3-tetramethylbutyl)phenyl]ether

9. MEASUREMENT RESULTS

9.1 SYSTEM PERFORMANCE CHECK

The system performance check is performed prior to any usage of the system in order to guarantee reproducible results. The system performance check verifies that the system operates within its specifications. The system performance check results are tabulated below. And also the corresponding SAR plot is attached as well in the SAR plots files.

SYSTEM PERFORMANCE CHECK MEASUREMENT CONDITIONS

- The measurements were performed in the flat section of the SAM twin phantom filled with Body simulating liquid of the following parameters.
- The DASY4 system with an E-fileld probe EX3DV4 SN: 3554 was used for the measurements.
- The dipole was mounted on the small tripod so that the dipole feed point was positioned below the center marking of the flat phantom section and the dipole was oriented parallel to the body axis (the long side of the phantom). The standard measuring distance was 10 mm (above 1 GHz) from dipole center to the simulating liquid surface.
- The coarse grid with a grid spacing of 10mm was aligned with the dipole.
- Special 5x5x7 fine cube was chosen for cube integration (dx=dy= 7.5 mm, dz= 3 mm).
- Distance between probe sensors and phantom surface was set to 3.0 mm.
- The dipole input power (forward power) was 250 mW±3%.
- The results are normalized to 1 W input power.

Reference SAR values

The reference SAR values were using measurement results indicated in the dipole calibration document (see table below)

Frequency (MHz)	1g SAR	10g SAR	Local SAR at Surface (Above Feed Point)	Local SAR at Surface (y = 2cm offset from feed point)
900	10.3	6.57	16.4	5.4
1800	38.2	20.3	69.5	6.8
2450(Body)	53.2	24.3	104.2	7.7

SYSTEM PERFORMANCE CHECK RESULTS

Dipole: D2450V2 SN: 728

Date: Feb. 14, 2005

Ambient condition: Temperature 24.0°C; Relative humidity: 58

Body Simulating Liquid			Parameters	Target	Measured	Deviation[%]	Limited[%]
f(MHz)	Temp. [°C]	Depth [cm]					
2450.00	23.10	15.00	Permitivity:	52.70	50.60	-3.98	± 5
			Conductivity:	1.95	2.03	4.10	± 5
			1g SAR:	53.60	55.60	3.73	± 5

Dipole: D2450V2 SN: 728

Date: Feb. 17, 2005

Ambient condition: Temperature 25.0°C; Relative humidity: 62

Body Simulating Liquid			Parameters	Target	Measured	Deviation[%]	Limited[%]
f(MHz)	Temp. [°C]	Depth [cm]					
2450.00	24.00	15.00	Permitivity:	52.70	50.50	-4.17	± 5
			Conductivity:	1.95	2.02	3.59	± 5
			1g SAR:	53.60	56.00	4.48	± 5

9.2 TEST LIQUID CONFIRMATION

SIMULATING LIQUIDS PARAMETER CHECK

The simulating liquids should be checked at the beginning of a series of SAR measurements to determine of the dielectric parameters are within the tolerances of the specified target values

The relative permittivity and conductivity of the tissue material should be within ± 5% of the values given in the table below. 5% may not be easily achieved at certain frequencies. Under such circumstances, 10% tolerance may be used until more precise tissue recipes are available

IEEE SCC-34/SC-2 P1528 RECOMMENDED TISSUE DIELECTRIC PARAMETERS

The head tissue dielectric parameters recommended by the IEEE SCC-34/SC-2 in P1528 have been incorporated in the following table. These head parameters are derived from planar layer models simulating the highest expected SAR for the dielectric properties and tissue thickness variations in a human head. Other head and body tissue parameters that have not been specified in P1528 are derived from the tissue dielectric parameters computed from the 4-Cole-Cole equations and extrapolated according to the head parameters specified in P1528

Target Frequency	Head		Body	
(MHz)	ε_r	σ (S/m)	ε_r	σ (S/m)
150	52.3	0.76	61.9	0.80
300	45.3	0.87	58.2	0.92
450	43.5	0.87	56.7	0.94
835	41.5	0.90	55.2	0.97
900	41.5	0.97	55.0	1.05
915	41.5	0.98	55.0	1.06
1450	40.5	1.20	54.0	1.30
1610	40.3	1.29	53.8	1.40
1800-2000	40.0	1.40	53.3	1.52
2450	39.2	1.80	52.7	1.95
3000	38.5	2.40	52.0	2.73
5800	45.3	5.27	48.2	6.00

SIMULATING LIQUIDS PARAMETER CHECK RESULTS

Ambient condition: Temperature:24.0°C; Relative humidity: 58%

Date: Feb. 14, 2005

Body Simulating Liquid			Parameters	Target	Measured	Deviation[%]	Limited[%]
f (MHz)	Temp. [°C]	Depth (cm)					
2450.00	23.10	15.00	Permitivity:	52.70	50.60	-3.98	± 5
			Conductivity:	1.95	2.03	4.10	± 5

Ambient condition: Temperature:25.0°C; Relative humidity: 62%

Date: Feb. 17, 2005

Body Simulating Liquid			Parameters	Target	Measured	Deviation[%]	Limited[%]
f (MHz)	Temp. [°C]	Depth (cm)					
2450.00	24.00	15.00	Permitivity:	52.70	50.50	-4.17	± 5
			Conductivity:	1.95	2.02	3.59	± 5

9.3 EUT TUNE-UP PROCEDURES

The following procedure had been used to prepare the EUT for the SAR test.

- The client supplied a special driver to program the EUT, allowing it to continually transmit the specified maximum power and change the channel frequency.
- The conducted power was measured at the high, middle and low channel frequency before and after the SAR measurement.
- The output power(dBm) we measured before SAR test in different transition rate and channel

FHSS:

CH	power
00	12.31 dBm
39	13.96 dBm
78	14.57 dBm

9.4 SAR MEASUREMENTS RESULTS

EUT Setup Configuration-1

Bluetooth: Duty Cycle =100 %, Crest Factor: 1. Depth of liquid: 15.0 cm

Sep. [mm]	Antenna	Channel	Frequency [MHz]	*Conducted Power_dBm		Liquid Temp [°C]	**SAR** (W/kg)	Limit (W/kg)
				Before	After			
6.6	PCB	78	2480	**14.57**	14.54	23.1	**0.144**	1.6

Notes:
1. *: Peak power.
2. Bottom face in parallel with flat phantom.
3. See attachment for the result presentation in plot format.

EUT Setup Configuration-2

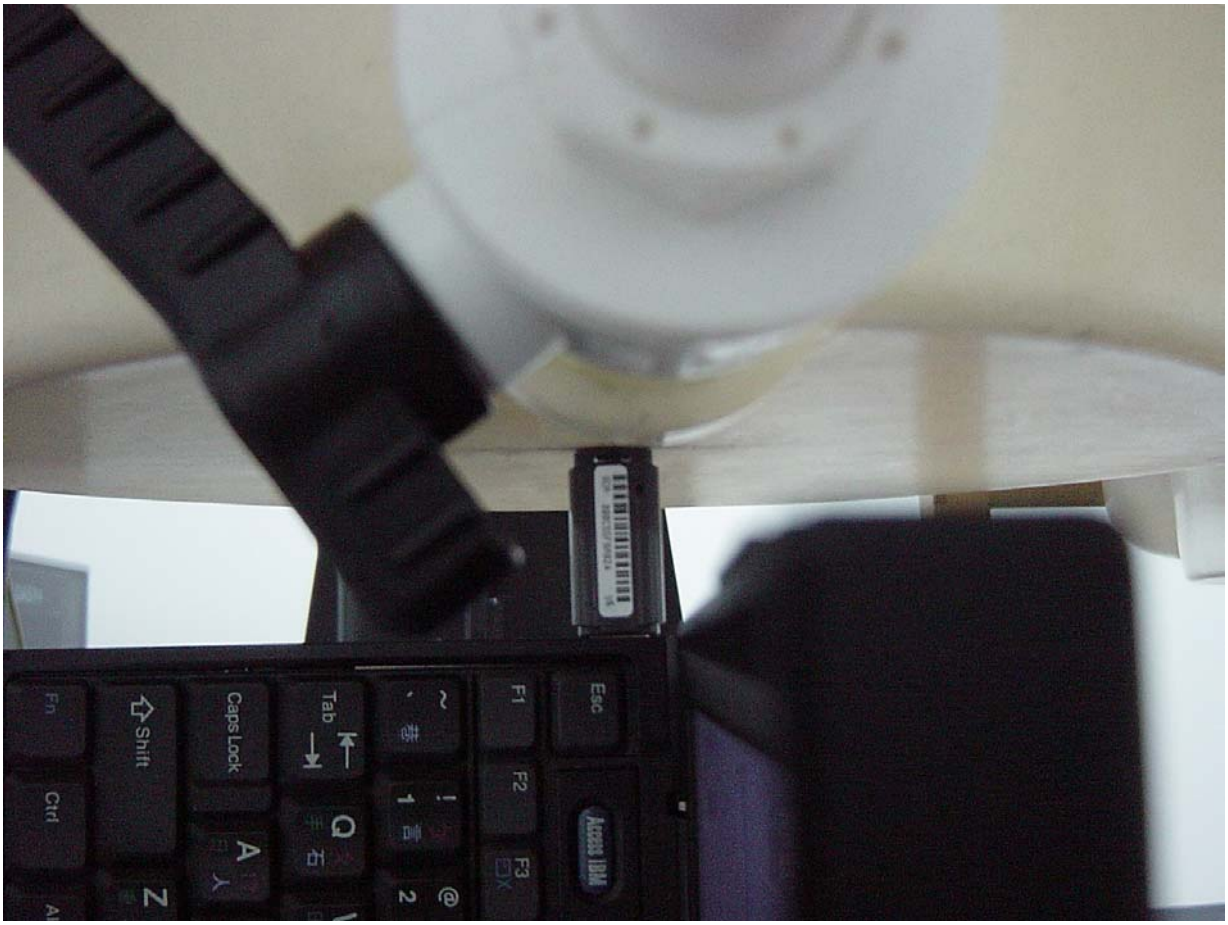

Bluetooth: Duty Cycle = 100 %, Crest Factor: 1. Depth of liquid: 15.0 cm

Sep. [mm]	Antenna	Channel	Frequency [MHz]	*Conducted Power_dBm		Liquid Temp [°C]	**SAR** (W/kg)	Limit (W/kg)
				Before	After			
0	PCB	78	2480	14.56	14.53	23.1	0.000582	1.6

Notes:
1. *: Peak power.
2. Host device perpendicular to flat phantom.
3. See attachment for the result presentation in plot format.

10. EUT PHOTOS

PCB Ant.

11. EQUIPMENT LIST & CALIBRATION STATUS

Name of Equipment	Manufacturer	Type/Model	Serial Number	Calibration Due
S-Parameter Network Analyzer	Agilent	E8358A	US40260243	05/24/05
Electronic Probe kit	Hewlett Packard	85070D	N/A	N/A
Power Meter	Boonton	4531	13061	07/12/05
Power Sensor	Boonton	56218	2240	07/12/05
Thermometer	Amarell	4046	25060	10/02/14
Thermometer	Amarell	4046	25058	12/03/14
Universal Radio Communication Tester	Rohde & Schwarz	CMU 200	1100.0008.02	N/A
Signal Generator	Agilent	E8257C	US42340383	08/01/05
Signal Generator	Agilent	83630B	3844A01022	01/14/05
Amplifier	Mini-Circuit	ZHL-1724HLN	N/A	N/A
Amplifier	Mini-Circuit	ZVE-8G	N/A	N/A
DC Power generator	ABM	8301HD	N/A	N/A
Data Acquisition Electronics (DAE)	SPEAG	DAE3	427	03/15/05
Data Acquisition Electronics (DAE)	SPEAG	DAE3	558	08/24/05
Dosimetric E-Field Probe	SPEAG	ET3DV6	1763	03/23/05
Dosimetric E-Field Probe	SPEAG	EX3DV4	3554	11/19/05
835 MHz System Validation Dipole	SPEAG	D835V2	4d015	12/09/06
900 MHz System Validation Dipole	SPEAG	D900V2	179	05/12/06
1800 MHz System Validation Dipole	SPEAG	D1800V2	2d062	03/17/06
1900 MHz System Validation Dipole	SPEAG	D1900V2	5d056	12/09/06
2450 MHz System Validation Dipole	SPEAG	D2450V2	728	03/22/06
5G MHz System Validation Dipole	SPEAG	D5GHz	1004	10/04/05
Probe Alignment Unit	SPEAG	LB (V2)	348	N/A
Robot	Staubli	RX90B L	F02/5T69A1/A/01	N/A
SAM Twin Phantom V4.0	SPEAG	N/A	N/A	N/A
Devices Holder	SPEAG	N/A	N/A	N/A
Head / Muscle 835 MHz	CCS	H / M 835A	N/A	N/A
Head / Muscle 900 MHz	CCS	H / M 900A	N/A	N/A
Head / Muscle 1800 MHz	CCS	H / M1800A	N/A	N/A
Head / Muscle 1900 MHz	CCS	H / M 1900A	N/A	N/A
Head / Muscle 2450 MHz	CCS	H / M 2450A	N/A	N/A
Head / Muscle 5200 MHz	CCS	H / M 5200A	N/A	N/A
Head / Muscle 5800 MHz	CCS	H / M 5800A	N/A	N/A

12. FACILITIES

All measurement facilities used to collect the measurement data are located at

☐ No. 81-1, Lane 210, Bade Rd. 2, Luchu Hsiang, Taoyuan Hsien, Taiwan, R.O.C.

☒ No. 11, Wu-Kung 6 Rd, Wu-Ku Hsiang, Wu-Ku Industrial District, Taipei Hsien, (248) Taiwan.

☐ No. 199, Chunghsen Road, Hsintien City, Taipei Hsien, Taiwan, R.O.C.

13. REFERENCES

[1] Federal Communications Commission, \Report and order: Guidelines for evaluating the environ-mental effects of radiofrequency radiation", Tech. Rep. FCC 96-326, FCC, Washington, D.C. 20554, 1996.

[2] David L. Means Kwok Chan, Robert F. Cleveland, \Evaluating compliance with FCC guidelines for human exposure to radiofrequency electromagnetic fields", Tech. Rep., Federal Communication Commision, O_ce of Engineering & Technology, Washington, DC, 1997.

[3] Thomas Schmid, Oliver Egger, and Niels Kuster, \Automated E-_eld scanning system for dosimetric assessments", IEEE Transactions on Microwave Theory and Techniques, vol. 44, pp. 105{113, Jan. 1996.

[4] Niels Kuster, Ralph K.astle, and Thomas Schmid, \Dosimetric evaluation of mobile communications equipment with known precision", IEICE Transactions on Communications, vol. E80-B, no. 5, pp. 645{652, May 1997.

[5] CENELEC, \Considerations for evaluating of human exposure to electromagnetic fields (EMFs) from mobile telecommunication equipment (MTE) in the frequency range 30MHz - 6GHz", Tech. Rep., CENELEC, European Committee for Electrotechnical Standardization, Brussels, 1997.

[6] ANSI, ANSI/IEEE C95.1-1992: IEEE Standard for Safety Levels with Respect to Human Exposure to Radio Frequency Electromagnetic Fields, 3 kHz to 300 GHz, The Institute of Electrical and Electronics Engineers, Inc., New York, NY 10017, 1992.

[7] Katja Pokovic, Thomas Schmid, and Niels Kuster, \Robust setup for precise calibration of E-_eld probes in tissue simulating liquids at mobile communications frequencies", in ICECOM _ 97, Dubrovnik, October 15{17, 1997, pp. 120{124.

[8] Katja Pokovic, Thomas Schmid, and Niels Kuster, \E-_eld probe with improved isotropy in brain simulating liquids", in Proceedings of the ELMAR, Zadar, Croatia, 23{25 June, 1996, pp. 172{175.

[9] Volker Hombach, Klaus Meier, Michael Burkhardt, Eberhard K. uhn, and Niels Kuster, \The dependence of EM energy absorption upon human head modeling at 900 MHz", IEEE Transactions onMicrowave Theory and Techniques, vol. 44, no. 10, pp. 1865{1873, Oct. 1996.

[10] Klaus Meier, Ralf Kastle, Volker Hombach, Roger Tay, and Niels Kuster, \The dependence of EM energy absorption upon human head modeling at 1800 MHz", IEEE Transactions on Microwave Theory and Techniques, Oct. 1997, in press.

[11] W. Gander, Computermathematik, Birkhaeuser, Basel, 1992.

[12] W. H. Press, S. A. Teukolsky,W. T. Vetterling, and B. P. Flannery, Numerical Recepies in C, The Art of Scientific Computing, Second Edition, Cambridge University Press, 1992..Dosimetric Evaluation of Sample device, month 1998 9

[13] NIS81 NAMAS, \The treatment of uncertainity in EMC measurement", Tech. Rep., NAMAS Executive, National Physical Laboratory, Teddington, Middlesex, England, 1994.

[14] Barry N. Taylor and Christ E. Kuyatt, \Guidelines for evaluating and expressing the uncertainty of NIST measurement results", Tech. Rep., National Institute of Standards and Technology, 1994. Dosimetric Evaluation of Sample device, month 1998 10

14. ATTACHMENTS

Exhibit	Content
1	System Performance Check Plots
2	SAR Test Plots

END OF REPORT

Date/Time: 02/14/05 15:38:14

Test Laboratory: Compliance Certification Services Inc.

D2450V2-SN 728-Body

DUT: Dipole 2450 MHz; Type: D2450V2; Serial: D2450V2 - SN:728

Communication System: CW2450; Frequency: 2450 MHz;Duty Cycle: 1:1
Medium parameters used: f = 2450 MHz; σ = 2.03 mho/m; ε_r = 50.6; ρ = 1000 kg/m^3
Air Temperature:24.0 deg C;Liquid Temperature:23.1 deg C
Area scan setting: Find secondary maximum within 2.0 dB
Zoom scan setting: Maximum number of cubes to measure is 2
Phantom section: Flat Section

DASY4 Configuration:

- Probe: EX3DV4 - SN3554; ConvF(6.14, 6.14, 6.14); Calibrated: 11/19/2004
- Sensor-Surface: 4mm (Mechanical Surface Detection)Sensor-Surface: 0mm (Fix Surface)
- Electronics: DAE3 Sn558; Calibrated: 8/24/2004
- Phantom: SAM 34; Type: SAM V4.0; Serial: TP-1150
- Measurement SW: DASY4, V4.4 Build 3; Postprocessing SW: SEMCAD, V1.8 Build 130

Pin=250mW,d=10mm/Area Scan (6x6x1): Measurement grid: dx=15mm, dy=15mm
Maximum value of SAR (measured) = 9.96 mW/g

Pin=250mW,d=10mm/Z Scan (1x1x21): Measurement grid: dx=20mm, dy=20mm, dz=5mm
Maximum value of SAR (measured) = 22.5 mW/g

Pin=250mW,d=10mm/Zoom Scan (5x5x7)/Cube 0: Measurement grid: dx=7.5mm, dy=7.5mm, dz=5mm
Reference Value = 86.4 V/m; Power Drift = 0.1 dB
Peak SAR (extrapolated) = 31.8 W/kg
SAR(1 g) = 13.9 mW/g; SAR(10 g) = 6.1 mW/g
Maximum value of SAR (measured) = 15.8 mW/g

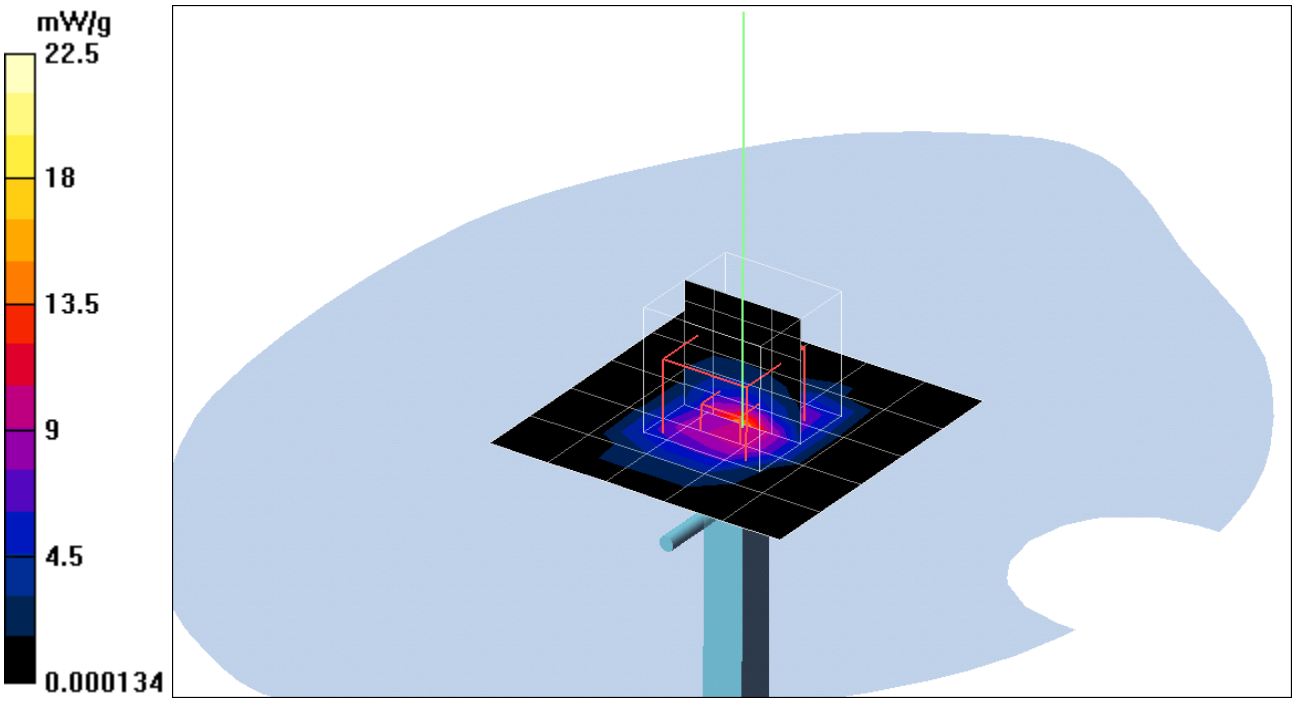
mW/g
22.5
18
13.5
9
4.5
0.000134

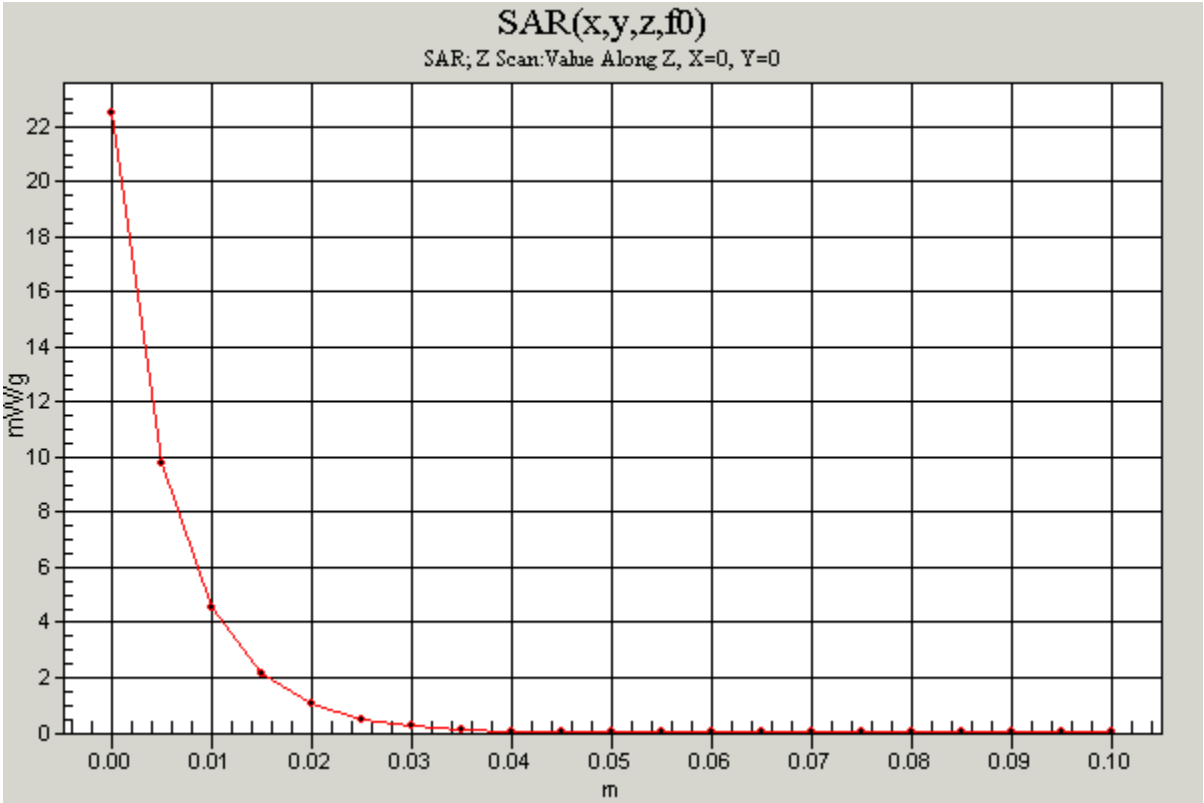
SAR(x,y,z,f0)
SAR; Z Scan:Value Along Z, X=0, Y=0
mW/g
0
2
4
6
8
10
12
14
16
18
20
22
0.00
0.01
0.02
0.03
0.04
0.05
0.06
0.07
0.08
0.09
0.10
m

Date/Time: 02/17/05 13:59:56

Test Laboratory: Compliance Certification Services Inc.

D2450V2-SN 728-Body

DUT: Dipole 2450 MHz; Type: D2450V2; Serial: D2450V2 - SN:728

Communication System: CW2450; Frequency: 2450 MHz;Duty Cycle: 1:1
Medium parameters used: f = 2450 MHz; σ = 2.02 mho/m; ε_r = 50.5; ρ = 1000 kg/m^3
Air Temperature:25.0 deg C;Liquid Temperature:24.0 deg C
Area scan setting: Find secondary maximum within 2.0 dB
Zoom scan setting: Maximum number of cubes to measure is 2
Phantom section: Flat Section

DASY4 Configuration:

- Probe: EX3DV4 - SN3554; ConvF(6.14, 6.14, 6.14); Calibrated: 11/19/2004
- Sensor-Surface: 4mm (Mechanical Surface Detection)Sensor-Surface: 0mm (Fix Surface)
- Electronics: DAE3 Sn558; Calibrated: 8/24/2004
- Phantom: SAM 34; Type: SAM V4.0; Serial: TP-1150
- Measurement SW: DASY4, V4.4 Build 3; Postprocessing SW: SEMCAD, V1.8 Build 130

Pin=250mW,d=10mm/Area Scan (6x6x1): Measurement grid: dx=15mm, dy=15mm
Maximum value of SAR (measured) = 9.99 mW/g

Pin=250mW,d=10mm/Z Scan (1x1x21): Measurement grid: dx=20mm, dy=20mm, dz=5mm
Maximum value of SAR (measured) = 22.8 mW/g

Pin=250mW,d=10mm/Zoom Scan (5x5x7)/Cube 0: Measurement grid: dx=7.5mm, dy=7.5mm, dz=5mm
Reference Value = 88.2 V/m; Power Drift = 0.1 dB
Peak SAR (extrapolated) = 31.9 W/kg
SAR(1 g) = 14 mW/g; SAR(10 g) = 6.07 mW/g
Maximum value of SAR (measured) = 15.8 mW/g

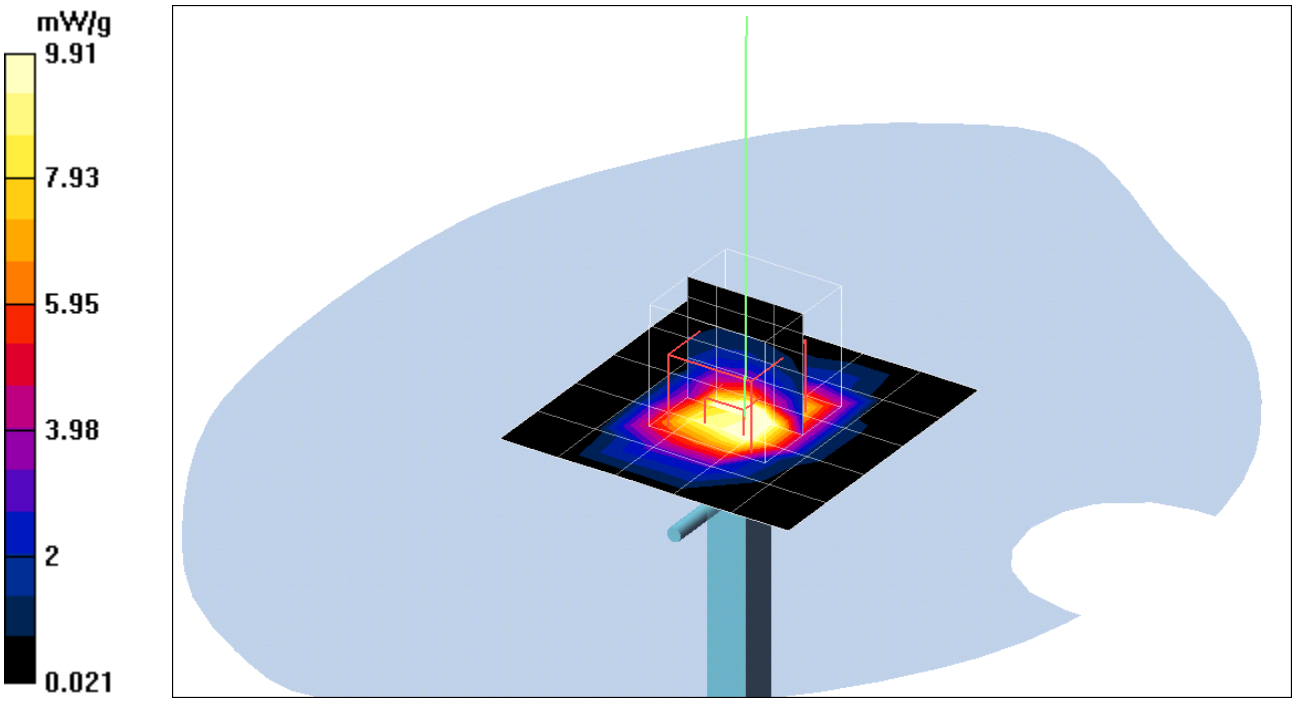
mW/g
9.91
7.93
5.95
3.98
2
0.021

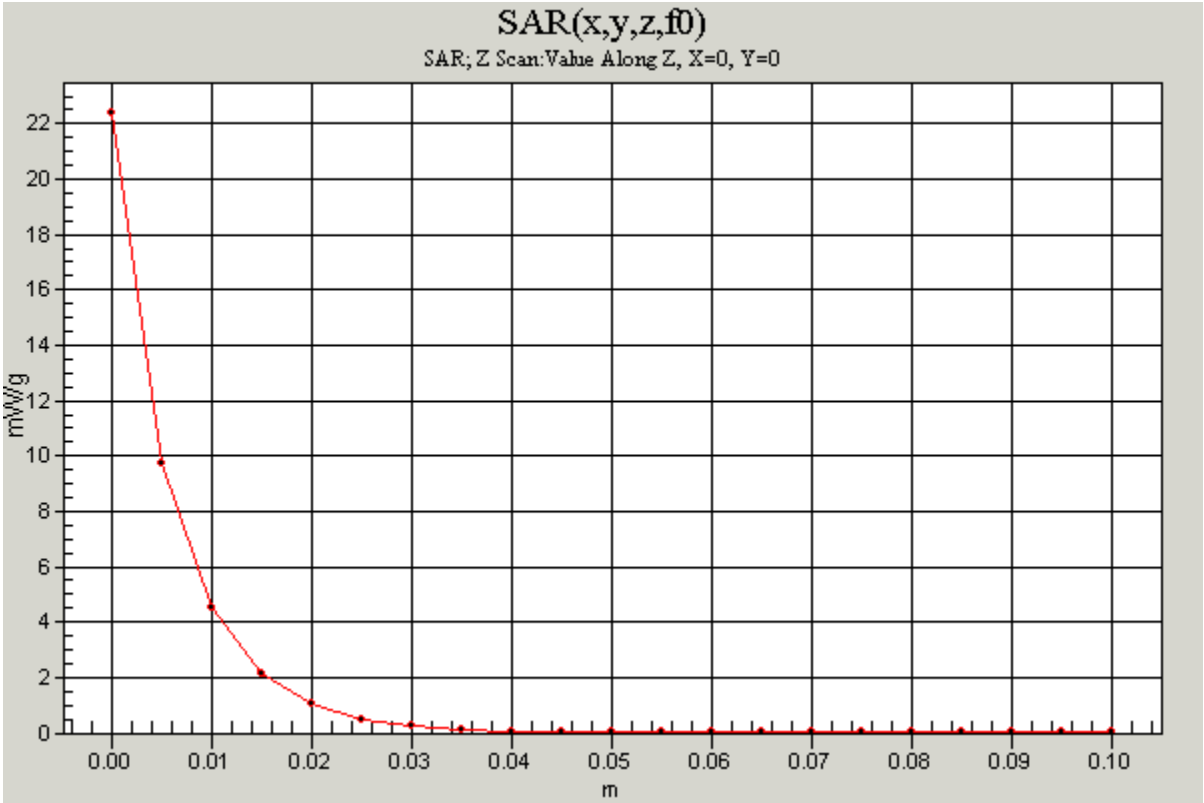
SAR(x,y,z,f0)
SAR; Z Scan:Value Along Z, X=0, Y=0
mW/g
0
2
4
6
8
10
12
14
16
18
20
22
0.00
0.01
0.02
0.03
0.04
0.05
0.06
0.07
0.08
0.09
0.10
m

Date/Time: 02/14/05 11:52:32

Test Laboratory: Compliance Certification Services Inc.

Test Configuration-1

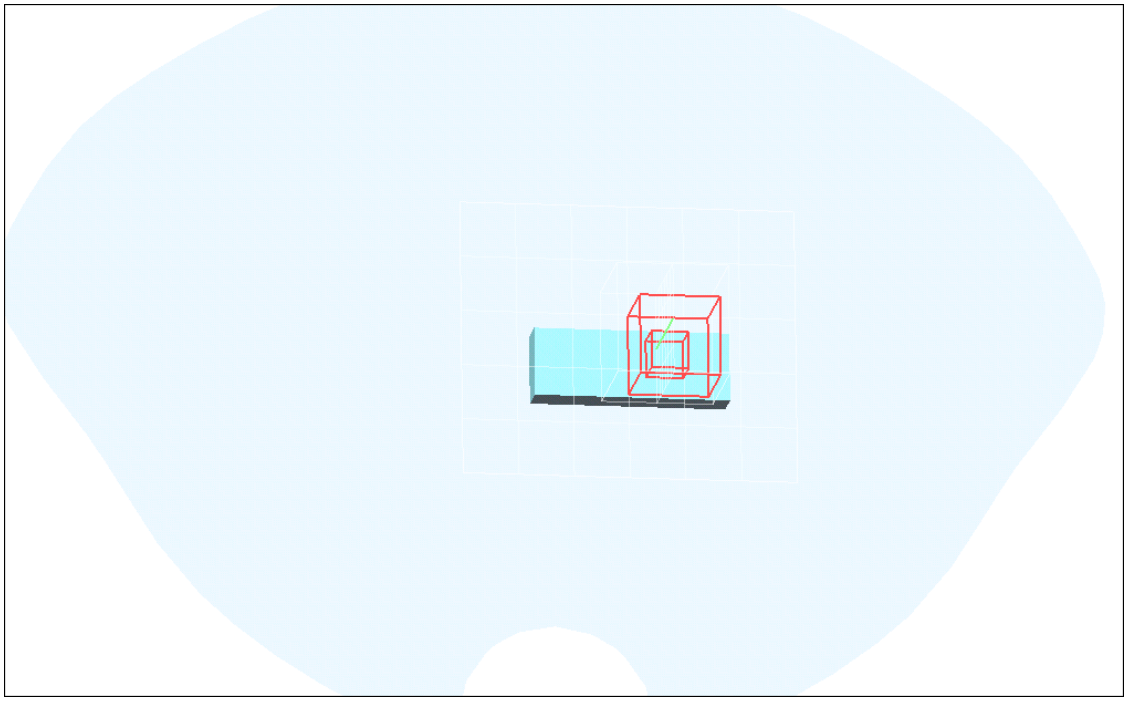

Date/Time: 02/14/05 11:52:32

Test Laboratory: Compliance Certification Services Inc.

Bluetooth Touch mode

DUT: PC850; Type: Bluetooth USB Adapter; Serial: N/A

Communication System: Bluetooth; Frequency: 2480 MHz;Duty Cycle: 1:1
Medium parameters used: f = 2480 MHz; σ = 2.03 mho/m; ε_r = 50.6; ρ = 1000 kg/m^3
Air Temperature:24.0 deg C;Liquid Temperature:23.1 deg C
Area scan setting: Find secondary maximum within 2.0 dB
Zoom scan setting: Maximum number of cubes to measure is 2
Phantom section: Flat Section

DASY4 Configuration:

- Probe: EX3DV4 - SN3554; ConvF(6.14, 6.14, 6.14); Calibrated: 11/19/2004
- Sensor-Surface: 4mm (Mechanical Surface Detection)Sensor-Surface: 0mm (Fix Surface)
- Electronics: DAE3 Sn558; Calibrated: 8/24/2004
- Phantom: SAM 34; Type: SAM V4.0; Serial: TP-1150
- Measurement SW: DASY4, V4.4 Build 3; Postprocessing SW: SEMCAD, V1.8 Build 130

High CH 2480/Area Scan (6x7x1): Measurement grid: dx=15mm, dy=15mm
Maximum value of SAR (measured) = 0.148 mW/g

High CH 2480/Z Scan (1x1x21): Measurement grid: dx=20mm, dy=20mm, dz=5mm
Maximum value of SAR (measured) = 0.218 mW/g

High CH 2480/Zoom Scan (5x5x7)/Cube 0: Measurement grid: dx=7.5mm, dy=7.5mm, dz=5mm
Reference Value = 2.05 V/m; Power Drift = 0.2 dB
Peak SAR (extrapolated) = 0.274 W/kg
SAR(1 g) = 0.144 mW/g; SAR(10 g) = 0.070 mW/g
Maximum value of SAR (measured) = 0.162 mW/g

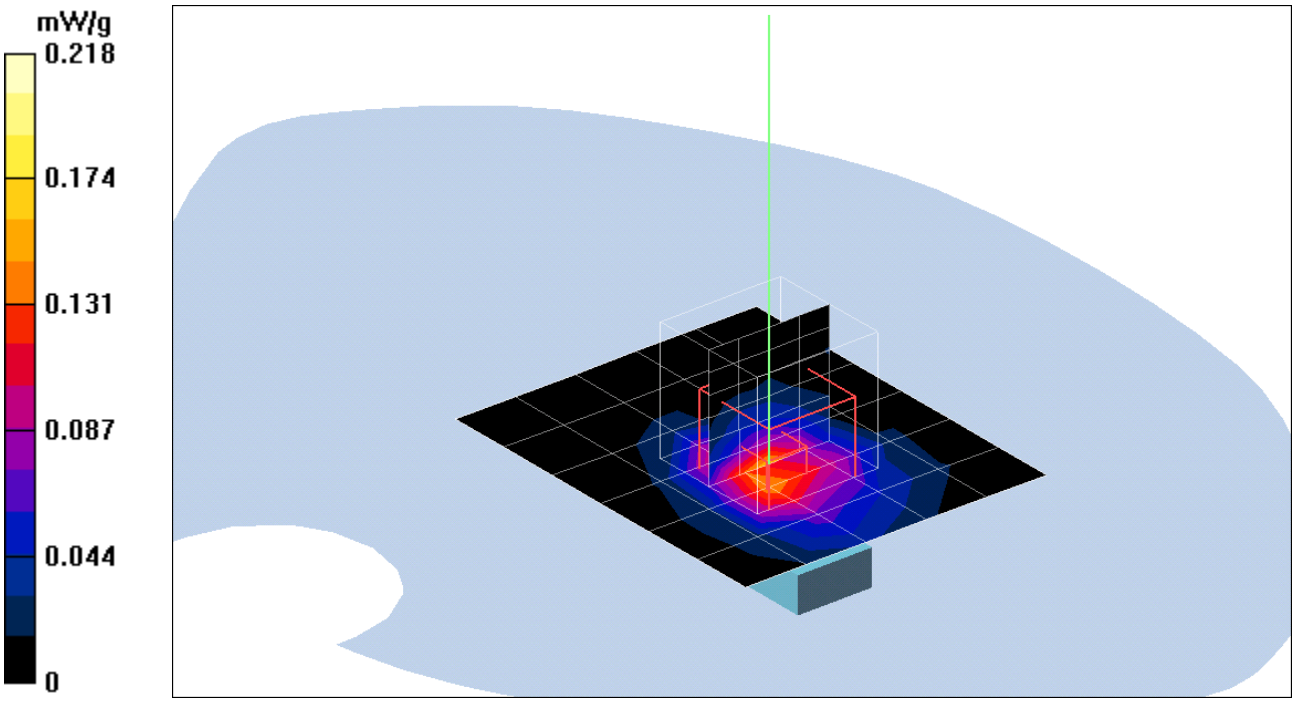
mW/g
0.218
0.174
0.131
0.087
0.044
0

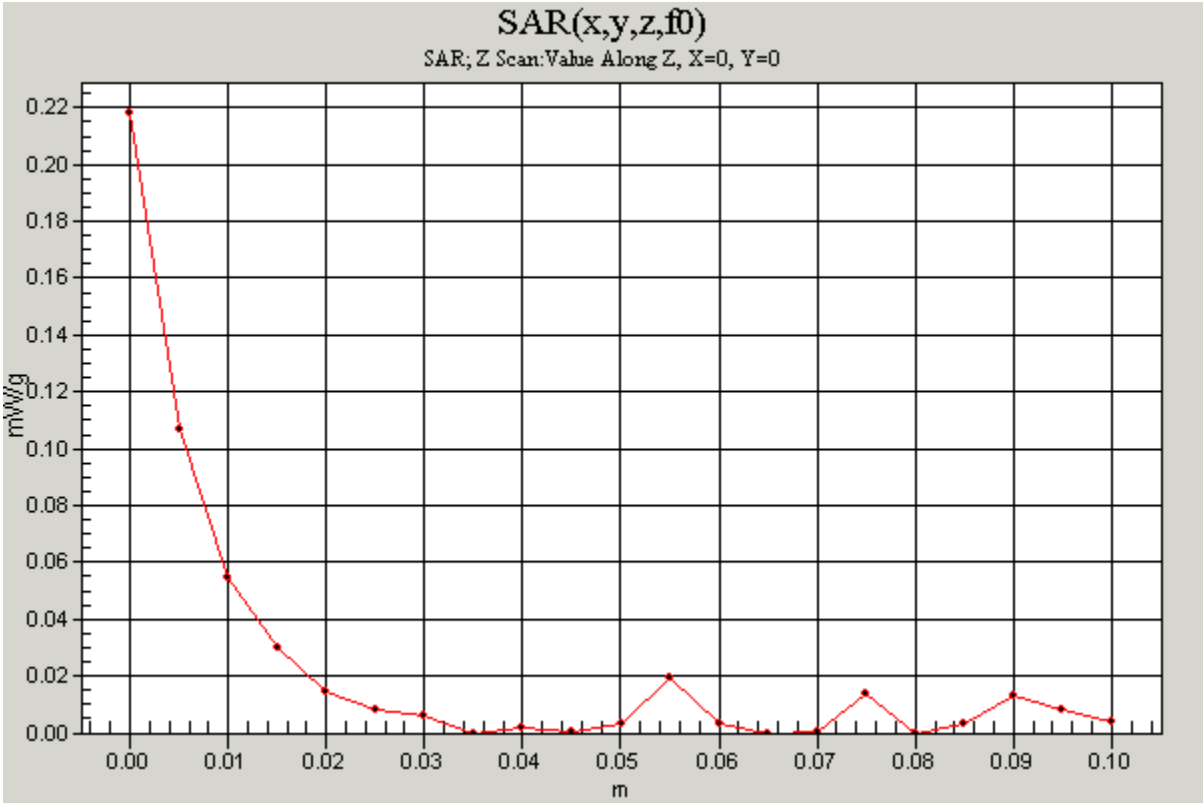
SAR(x,y,z,f0)
SAR; Z Scan:Value Along Z, X=0, Y=0
mW/g
0.22
0.20
0.18
0.16
0.14
0.12
0.10
0.08
0.06
0.04
0.02
0.00
0.00
0.01
0.02
0.03
0.04
0.05
0.06
0.07
0.08
0.09
0.10
m

Date/Time: 02/17/05 10:28:37

Test Laboratory: Compliance Certification Services Inc.

Test Configuration-2

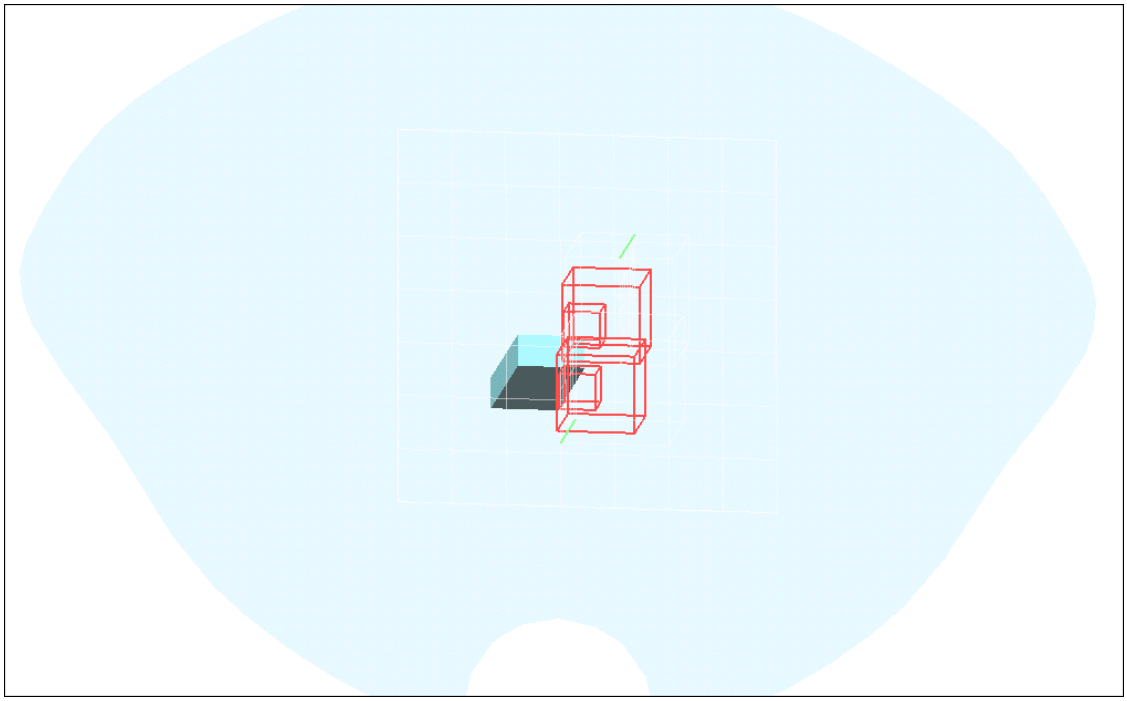

Date/Time: 02/17/05 10:28:37

Test Laboratory: Compliance Certification Services Inc.

Bluetooth 0mm mode

DUT: PC850; Type: Bluetooth USB Adapter; Serial: N/A

Communication System: Bluetooth; Frequency: 2480 MHz;Duty Cycle: 1:1
Medium parameters used: f = 2480 MHz; σ = 2.02 mho/m; ε_r = 50.5; ρ = 1000 kg/m^3
Air Temperature:25.0 deg C;Liquid Temperature:24.0 deg C
Area scan setting: Find secondary maximum within 2.0 dB
and with a Peak SAR value greater than 0.0012 W/kg
Zoom scan setting: Maximum number of cubes to measure is 2
Phantom section: Flat Section

DASY4 Configuration:

- Probe: EX3DV4 - SN3554; ConvF(6.14, 6.14, 6.14); Calibrated: 11/19/2004
- Sensor-Surface: 4mm (Mechanical Surface Detection)
- Electronics: DAE3 Sn558; Calibrated: 8/24/2004
- Phantom: SAM 34; Type: SAM V4.0; Serial: TP-1150
- Measurement SW: DASY4, V4.4 Build 3; Postprocessing SW: SEMCAD, V1.8 Build 130

High CH 2480/Area Scan (8x8x1): Measurement grid: dx=15mm, dy=15mm
Maximum value of SAR (measured) = 0.0081 mW/g

High CH 2480/Zoom Scan (5x5x7)/Cube 0: Measurement grid: dx=7.5mm, dy=7.5mm, dz=5mm
Reference Value = 1.89 V/m; Power Drift = 0.2 dB
Peak SAR (extrapolated) = 0.024 W/kg
SAR(1 g) = 0.000582 mW/g; SAR(10 g) = 8.18e-005 mW/g
Maximum value of SAR (measured) = 0.018 mW/g

High CH 2480/Zoom Scan (5x5x7)/Cube 1: Measurement grid: dx=7.5mm, dy=7.5mm, dz=5mm
Reference Value = 1.89 V/m; Power Drift = 0.2 dB
Peak SAR (extrapolated) = 0.016 W/kg
SAR(1 g) = 0.000126 mW/g; SAR(10 g) = 1.93e-005 mW/g
Maximum value of SAR (measured) = 0.016 mW/g

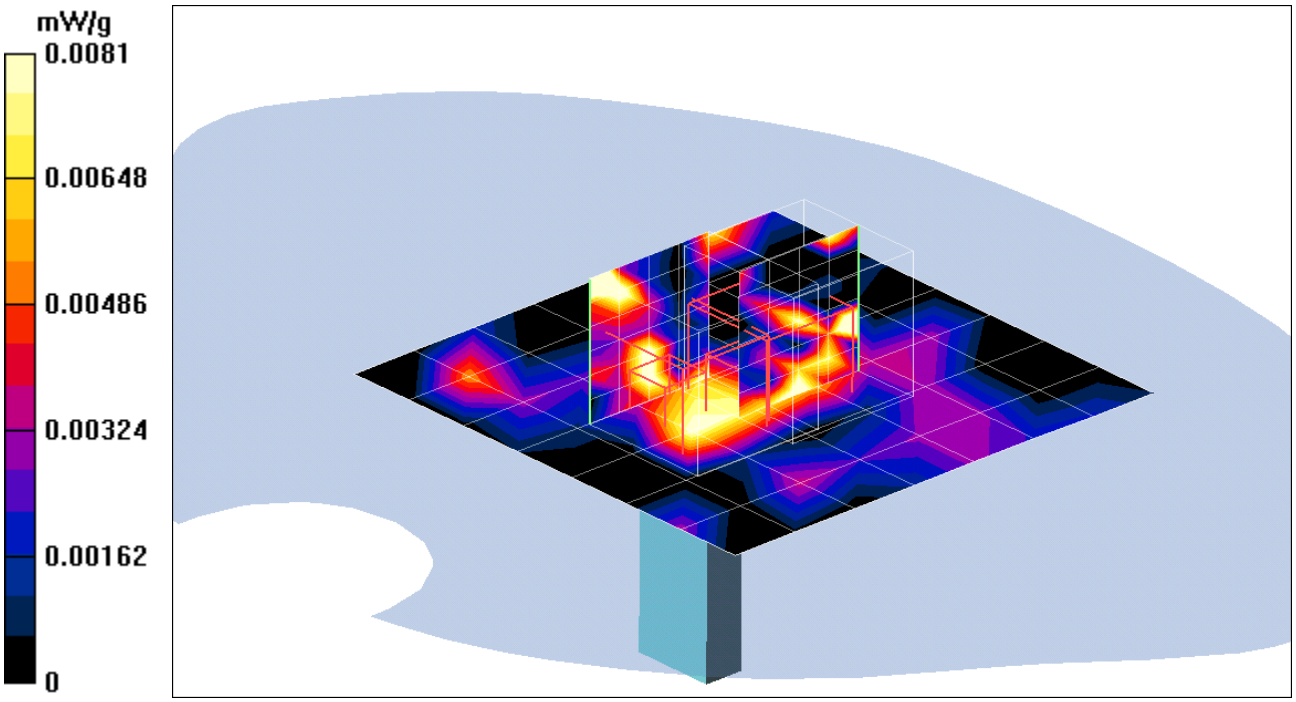
mW/g
0.0081
0.00648
0.00486
0.00324
0.00162
0