ELECTROMAGNETIC RESEARCH INSTITUTE

EMI TEST REPORT

Emission of electromagnetic disturbance

Test Report No. : ERI-FCC03-0066

Equipment : MP3 Player

Name of basic model : MP-400D

Family model : MP-400E, MP-400F, MP-400G, SSF

Manufacturer : CENIX DIGICOM CO., LTD.

Applicant : CENIX DIGICOM CO., LTD.

Tested date : 2003. 9. 30 – 10.1

Issued date : 2003. 10. 16

Test results : PASS

Test Standards : FCC Part 15 Subpart B (Class B)

/digital devices & peripherals

Test Procedure and Items:

- AC Power line Conducted emissions measurement : ANSI C63.4-1992
- Radiated emissions measurement : ANSI C63.4-1992

Tested by: GWEON, HUR **Approved by: UK-CHO, RIM**

The results in this report apply only to the sample tested.
This test report shall not be reproduced except in full, without the written approval of **ERI Laboratory**.

CONTENTS

1. CLIENT INFORMATION

2. LABORATORY INFORMATION

3. EQUIPMENT UNDER TEST INFORMATION(EUT)
   3.1 Identification of the EUT
   3.2 Additional information about the EUT
   3.3 Peripheral equipment

4. CONTINUOUS DISTURBANCE VOLTAGE, MAIN TERMINAL
   4.1 Operating environment
   4.2 Test set-up and test procedures
   4.3 Operation Conditions
   4.4 Test instrument
   4.5 Test results

5. RADIATED DISTURBANCE : 30MHz – 1000MHz
   5.1 Operating environment
   5.2 Test set-up
   5.3 Test conditions
   5.4 Test instrument
   5.5 Test results(Test mode: Up & download mode)
   5.6 Test results(Test mode: Play mode)
   5.7 Test results(Test mode : FM Tuner, Others)

APPENDIX

(None)

1. CLIENT INFORMATION

The EUT has been tested by request of :

Company	: CENIX DIGICOM CO., LTD.
Address	: #584-4 PAJANG-DONG, JANGAN-KU, SUWON-CITY, KYUNGGI-DO, KOREA
Name of contact	: -
Telephone	: +82-31-245-2900
Facsimile	: +82-31-251-6425

2. LABORATORY INFORMATION

The 10m full-anechoic chamber and/or EMC facilities are used for these testing. These facilities were accredited by KOLAS, EK, MIC of Korea and FCC of USA.

Address

ELECTROMAGNETIC RESEARCH INSTITUTE.
66-6, JEIL-RI, YANGJI-MYUN, YOUNGIN-CITY, KYUNGGI-DO, KOREA

Telephone No.	: +82-31-336-1186~7
Facsimile No.	: +82-31-336-1184

Registered No.

KOLAS	: 111
EK	: J
MIC	: KR0030
FCC Filing No.	: 302567

3. EQUIPMENT UNDER TEST INFORMATION(EUT)

3.1 Identification of the EUT

Type of equipment	: MP3 Player
Model name	: MP-400D
Brand name	: -
Manufacturer	: CENIX DIGICOM CO., LTD.
Address	: #584-4 PAJANG-DONG, JANGAN-KU, SUWON-CITY, KYUNGGI-DO, KOREA
Telephone	: +82-31-245-2900
Facsimile	: +82-31-251-6425
Country of origin	: KOREA
Rating	: DC 1.5V

3.2 Additional information about the EUT

Class B,
Family Models List:

Basic Model	Variant Model	Differential point
MP-400D	MP-400E	Model name
	MP-400F	Model name
	MP-400G	Model name
	SSF	Model name

3.3 Peripheral equipment

Defined as equipment needed for correct operation of the EUT.

Description	Model No.	Serial No.	Manufacture
Printer	C6427A	CN13V1B1SZ	HP
Joystick	-	LCA70651918	LOGITECH
Mouse	M-S48	LZA82142279	LOGITECH
Keyboard	SDM4510UH	4M020619	SAMSUNG
PC	Dreamsys EZ/AC	5004135400304	SAMBO COMPUTER
Monitor	PN15VT	P181H80R907989	-
Earphone	-	-	-

4. CONTINUOUS DISTURBANCE VOLTAGE, MAIN TERMINAL
: Frequency range 0.15 MHz to 30 MHz

4.1 Operating environment

Temperature : 19.0 ℃
Relative Humidity : 58.0 %

4.2 Test set-up and test procedures

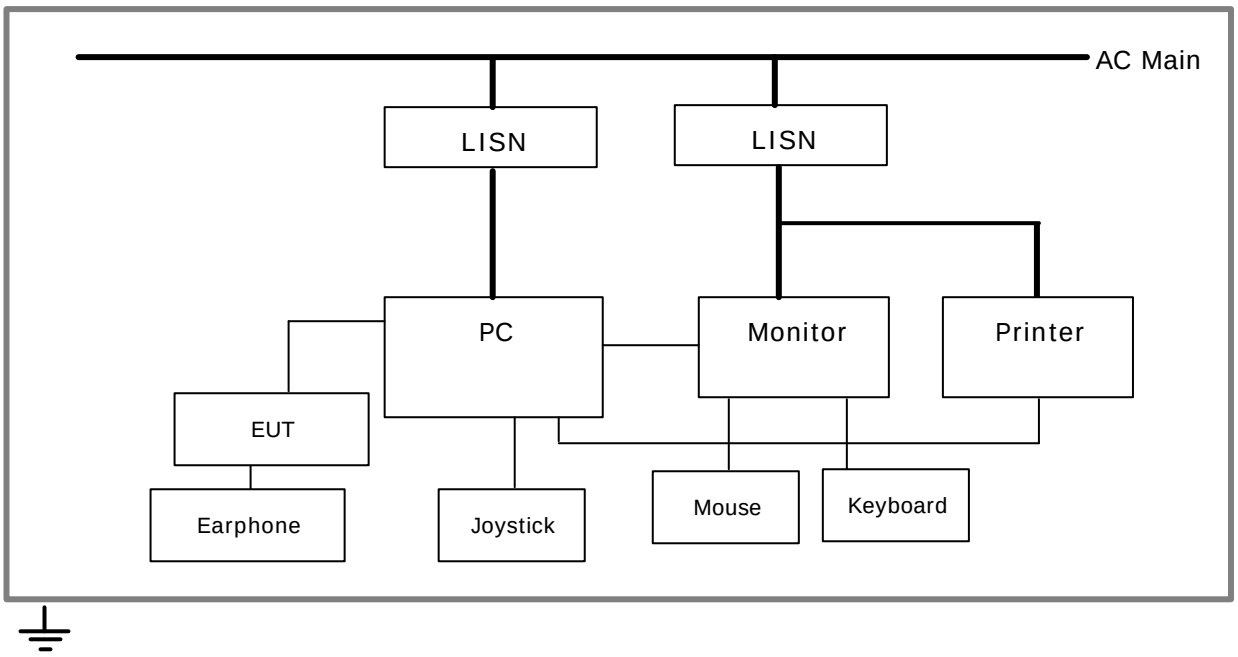

The mains terminal disturbance voltage was measured with the equipment under test(EUT) in a shield room. The EUT was connected to an artificial mains network(LISN) placed on the floor. The EUT was placed on non-metallic table 0.4m above the metallic, grounded floor. The distance to other metallic surface was at least 0.8m.
Amplitude measurements were performed with a quasi-peak detector and an average detector.

4.3 Operation Conditions

Up & download mode, play mode

4.4 Test instrument

Instrument	Model No	Serial No.	Makers	Next cal.date	Used
Test receiver	ESCS30	100021	R&S	2004. 1. 24	x
L.I.S.N.	ESH3-Z5	827246/008	R&S	2004. 3. 19	x
	ESH3-Z5	831887/018	R&S	2004. 3. 19	x
Shield room	8 × 6 × 3.3m/H	-	-	-	x

4.5 Test results

Date of test: Sep 30, 2003
An overview sweep performed with peak detector & average detector are included in the report **as test reports.**

Frequency	Tested	LISN	Meter		Limits	
Range	Freq.		Reading			
			QP	AV	QP	AV
[MHz]	[MHz]		[dBuV]		[dBuV]	
0.15 - 30(MHz)	0.150	H	42.9	16.5	66.0	56.0
	0.195	N	55.8	45.8	63.9	53.9
	0.258	H	42.1	32.2	61.5	51.5
	0.324	H	36.9	34.3	59.5	49.5
	0.654	N	36.5	35.8	56.0	46.0
	0.720	N	36.9	36.9	56.0	46.0
	1.242	N	37.0	36.0	56.0	46.0
	1.308	N	36.9	35.8	56.0	46.0
	11.982	N	41.3	34.5	60.0	50.0
	18.000	H	42.2	15.2	60.0	50.0

<5 : mean less than 5dB

Other frequency keep over 20dB margin.

Result: Pass

The measured emissions level of the EUT have found the below of the specified limit.

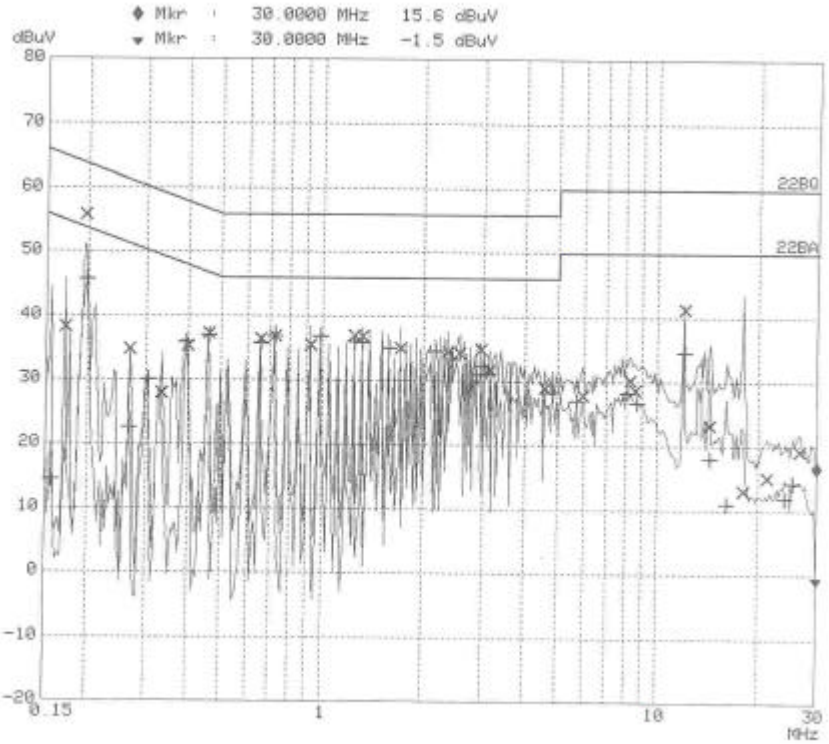

PAGE 1

[Live line]

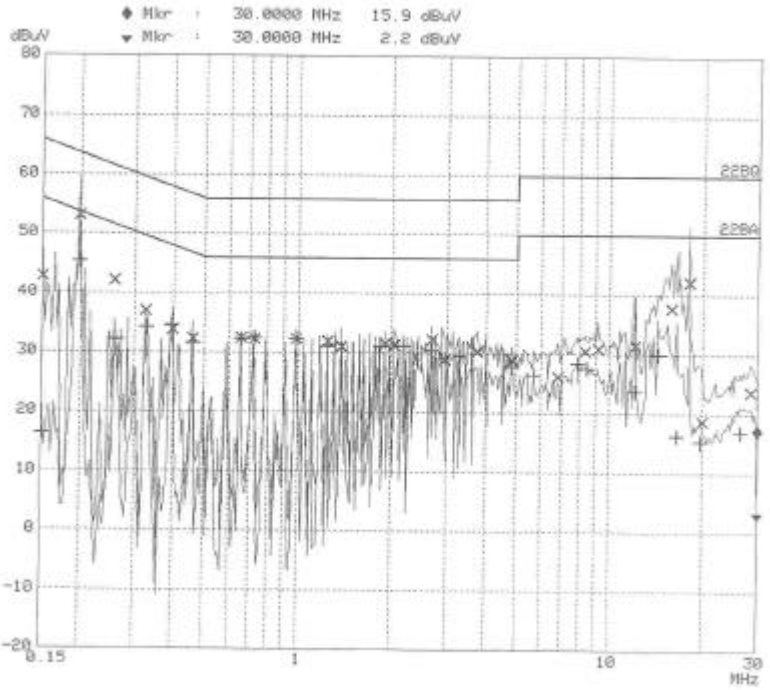

PAGE 1

[Neutral line]

5. RADIATED DISTURBANCE
: 30MHz – 1000MHz

5.1 Operating environment

Temperature : 22.0 ℃
Relative Humidity : 55.0 %

5.2 Test set-up

The frequency range investigated was 30 MHz to 1000 MHz.
All readings are quasi-peak unless stated otherwise.
The half-wave dipole antenna was tuned to the frequency found during Preliminary radiated measurements. The EUT, support equipment and Interconnecting cables were re-configured to the set-up to the producing the Maximum emission for the frequency and were placed on top of a 0.8 meter High non-metallic 1 X 1.5 meter table. The EUT, support equipment, and interconnecting cables were re-arranged and manipulated to maximize each EME emission.
The turntable containing the system was rotated the antenna height was varied 1 to 4 meters
and stopped at the azimuth or height producing the maximum emission.
And this device(EUT) was tested in 3 orthogonal planes.
The antenna measured both horizontal and vertical polarization.

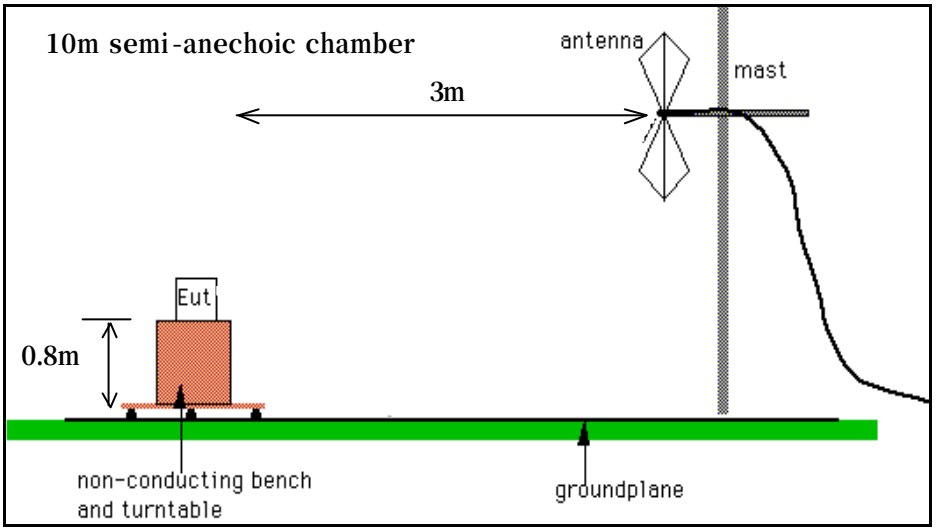

<General test set-up for radiated emissions>

5.3 Operation Conditions

Up & download mode, play mode

5.4 Test instrument

Instrument	Model No.	Serial No.	Makers	Next cal.date	Used
Test receiver	ESCS30	100021	R&S	2004. 1. 24	x
L.I.S.N.	ESH3-Z5	827246/008	R&S	2004. 3. 19	
	ESH3-Z5	831887/018	R&S	2004. 3. 19	
Biconical Antenna	VHA9103	91031950	Schwarzbeck	2004.01.24	x
Log-Periodic Antenna	UHALP9108A	0392	Schwarzbeck	2004.01.23	x
Antenna Mast	MA240	N/A	HD	-	x
Turn Table	DT430S	N/A	HD	-	x

5.5 Test results(Test mode: Up & download mode)

Date of test: Sep 30, 2003

Freq (MHz)	Reading (dBuV/m)	Ant	AF (dB)	CL (dB)	Result (dBuV/m)	Limit (dB)	Margin (dB)
42.00	11.36	V	11.05	1.85	24.26	40.00	15.74
79.00	14.46	V	8.20	2.60	25.26	40.00	14.74
91.00	10.28	V	8.68	2.63	21.59	43.50	21.91
132.00	8.21	H	11.45	3.15	22.81	43.50	20.69
134.00	11.90	V	11.50	3.20	26.60	43.50	16.90
229.00	7.32	H	14.60	4.40	26.32	46.00	19.68
277.00	4.97	H	17.30	5.05	27.32	46.00	18.68
302.00	8.65	V	12.76	5.31	26.72	46.00	19.28
344.00	15.46	V	13.85	0.90	30.21	46.00	15.79
350.00	10.21	H	14.30	5.70	30.21	46.00	15.79
391.00	10.19	V	14.30	6.03	29.59	46.00	16.41
401.00	5.21	H	15.71	6.10	27.02	46.00	18.98

* Receiving Antenna Mode : ***Horizontal, Vertical***

* <5 : mean less than 5dB

Note : Reading = Test Receiver meter, P= Polarization ✍ POL H = Horizontal POL V = Vertical A = Angle, AF = Antenna Factor CL = Cable Loss Result = Field Strength(AF + CL+ Reading)

Result: Pass

The measured emissions level of the EUT have found the below of the specified limit.

5.6 Test results(Test mode: Play mode)

Date of test: Sep 30, 2003

Freq (MHz)	Reading (dBuV/m)	Ant	AF (dB)	CL (dB)	Result (dBuV/m)	Limit (dB)	Margin (dB)
55.20	9.95	V	9.67	1.90	21.52	40.00	18.48
69.62	15.11	V	6.49	2.00	23.60	40.00	16.40
130.45	10.44	H	13.86	2.60	26.90	43.50	16.60
190.22	16.10	H	16.40	3.10	35.60	43.50	7.90
219.21	6.83	V	16.50	3.20	26.53	46.00	19.47
227.82	5.16	H	16.70	3.50	25.36	46.00	20.64
488.48	8.69	V	17.06	4.60	30.35	46.00	15.65
510.22	14.59	H	17.34	4.70	36.63	46.00	9.37
543.31	9.76	V	17.69	4.80	32.25	46.00	13.75
653.79	11.21	H	19.50	5.50	36.21	46.00	9.79
663.24	10.25	V	19.50	5.50	35.25	46.00	10.75

* Receiving Antenna Mode : ***Horizontal, Vertical***

* <5 : mean less than 5dB

Note : Reading = Test Receiver meter, P= Polarization ✍ POL H = Horizontal POL V = Vertical A = Angle, AF = Antenna Factor CL = Cable Loss Result = Field Strength(AF + CL+ Reading)

Result: Pass

The measured emissions level of the EUT have found the below of the specified limit.

5.7 Test results < Test mode: FM tuner >

Date of test: Sep 30, 2003

T.	Tested	Meter Reading (quasi-peak)		Limits	Total Loss	Margins	
Frequency	Frequency	H	V			H	V
[MHz]	[MHz]	[dBuV/m]	[dBuV/m]			[dBuV/m]	[dBuV/m]
87.5	98.2	18.1	-	43.5	11.9	25.4	-
	196.4	25.4	-	43.5	17.8	18.1	-
	294.6	-	-	46.0	24.3	-	-
	392.8	-	-	46.0	21.4	-	-
	491.0	-	-	46.0	23.9	-	-
	589.2	-	-	46.0	26.2	-	-
	687.4	-	-	46.0	28.7	-	-
	785.6	-	-	46.0	30.0	-	-
	883.8	-	-	46.0	31.9	-	-
	982.0	-	-	54.0	33.1	-	-
98.0	108.7	20.0	-	43.5	12.7	23.5	-
	217.4	-	20.0	46.0	18.9	-	26.0
	326.1	-	-	46.0	18.9	-	-
	434.8	-	-	46.0	22.4	-	-
	543.5	-	-	46.0	25.2	-	-
	652.2	-	-	46.0	27.5	-	-
	760.9	-	-	46.0	29.7	-	-
	869.6	-	-	46.0	31.8	-	-
	978.3	-	-	54.0	33.0	-	-
108.0	118.7	20.5	-	43.5	13.7	23.0	-
	237.4	-	22.1	46.0	19.0	-	23.9
	356.1	-	-	46.0	20.1	-	-
	474.8	-	-	46.0	23.4	-	-
	593.5	-	-	46.0	26.3	-	-
	712.2	-	-	46.0	29.1	-	-
	830.9	-	-	46.0	30.7	-	-
	949.6	-	-	46.0	32.1	-	-

* Meter reading: ***Loss include***
* Margins : ***[Limits] – meter reading]***
* Receiving Antenna Mode: ***Horizontal, Vertical***
* 10m chamber
* <5 : mean less than 5dB
*** Measurement uncertainty** (K=2)
30-300MHz : +3.96dB / -4.04dB
300-1000MHz : +3.04dB / -3.00dB

Result: Pass

The measured emissions level of the EUT have found the below of the specified limit.

Others

Date of test: Sep 30, 2003

Tested Frequency [MHz]	ANT Pol.	Meter Reading [A] [dBuV/m]	Antenna Factor [B] [dB]	Cable Loss [C] [dB]	Results [A+B+C] [dBuV/m]	Limits [dBuV/m]
42.36	H	12.07	14.25	1.70	28.02	40.00
51.80	V	11.92	11.50	1.70	25.12	40.00
130.12	V	13.17	13.86	2.60	29.63	43.50
145.60	H	13.15	14.70	2.70	30.55	43.50
162.50	H	11.31	15.59	2.90	29.80	43.50
207.00	V	12.62	16.29	3.20	32.11	46.00
213.20	H	11.85	16.50	3.20	31.55	46.00
343.50	V	16.75	13.85	0.90	31.50	46.00
410.20	H	13.04	15.87	4.10	33.01	46.00
520.20	H	8.21	17.34	4.70	30.25	46.00
847.00	V	4.83	21.18	6.10	32.11	46.00

* Receiving Antenna Mode : ***Horizontal, Vertical***
* Test distance: **3m** (10m Anechoic Chamber)
* <5 : mean less than 5dB
Note : Reading = Test Receiver meter, P= Polarization ✍ POL H = Horizontal POL V = Vertical A = Angle, AF = Antenna Factor CL = Cable Loss Result = Field Strength(AF + CL+ Reading)