Quick Start Guide

EN

HC 2000B

Studio-Quality Wireless Headphones with Bluetooth* Connectivity

Controls

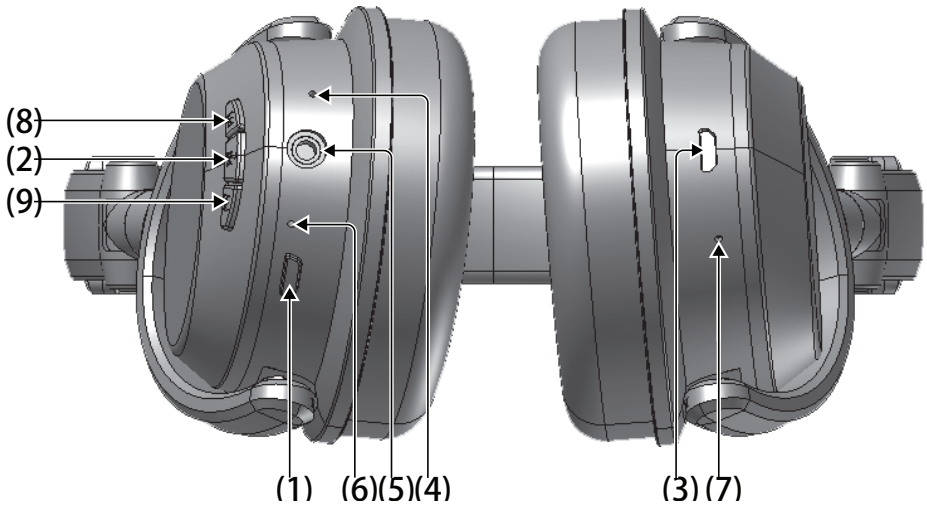

(1) **POWER** button switches the headphones on and off.

(2) **PLAY/PAUSE** button begins and pauses audio playback. Secondary call functions include Answer Call/End Call/Reject Call (press and hold).

(3) **MICRO USB** jack is for charging rechargeable batteries.

(4) **MICROPHONE** can be used for talkback during phone calls.

(5) **AUX IN** stereo jack can be used to listen to audio from external devices as normal wired headphones using audio cables with 3.5 mm stereo connectors.

(6) **BLUETOOTH LED** shows the Bluetooth status (blinking blue and red = in pairing mode; blue = connected; blinking blue = audio playback underway).

(7) **CHARGE LED** shows the charge status (red = charging; blue = fully charged).

(8) **FORWARD/VOLUME** button can be used to increase volume (short press), skip to the next song (long press), or begin/end a phone call on a Bluetooth-connected mobile phone.

(9) **BACK/VOLUME** button can be used to decrease volume (short press) or skip to the previous song (long press).

A54-00002-37750

behringer

Getting started

Power Supply

The unit is powered by a built-in, lithium-polymer rechargeable battery. Charge the built-in battery for at least four hours before using the device for the first time.

To charge the internal battery, follow these steps:

1. Connect the smaller end of the supplied USB cable to the MICRO USB jack.
2. Connect the other end to a powered USB jack on your computer or an AC power supply (not included).
3. The CHARGE LED indicator will change color to red during charging.
4. When fully charged, the CHARGE LED indicator will turn blue.

☒ Warnings:

- Do not throw batteries in fire!
- While using the built-in battery, the environmental temperature should be 5° C (41° F) to 35° C (95° F).
- To get the longest service life for the built-in battery, charge at room temperature.
- Attention should be drawn the environmental aspects of battery disposal.
- Battery shall not be exposed to excessive heat such as sunshine, fire or the like.
- When the battery is low, the unit will beep every 20 seconds. The unit will turn off automatically when the battery is too low to work.

Turning the unit on/off

1. Long press the POWER button to turn ON the unit. The BLUETOOTH LED indicator will light on.
2. Long press the POWER button again turn OFF the unit. The BLUETOOTH LED indicator will turn off.

Bluetooth pairing

1. Long press to turn ON the unit. The BLUETOOTH LED indicator will blink blue and red alternately to indicate the unit is in pairing mode.
2. On the Bluetooth device, enable Bluetooth and select “HC 2000B” from the Device List. (Refer to the user manual of your Bluetooth device for detailed operations.)
3. If the Bluetooth device prompts for a passcode, use “0000”.

Some Bluetooth devices will ask you to accept and confirm the connection. If the units are paired properly, you will hear an indication sound. If pairing is not successful within 10 minutes, the headphones will turn off automatically.

NOTE: If you want to connect your headphones to another Bluetooth audio device, you need to disconnect the current device first and follow the above steps to make a new connection.

Using A Bluetooth Device

1. When successfully paired, sound from your Bluetooth device will be audible through the headphones
2. Press the PLAY/PAUSE button to pause playback. Press again to resume playback.
3. Short press the FORWARD/BACK buttons to adjust the headphone volume. You can also adjust the volume directly on your paired Bluetooth device.
4. Long press the FORWARD/BACK buttons to select your desired audio file.

NOTE: The BLUETOOTH LED indicator will blink blue during playback.

Receiving A Phone Call

These headphones are equipped with a built-in microphone, which allows you to make calls on a Bluetooth-enabled mobile phone. Make sure your Bluetooth-enabled mobile phone is paired with the headphones. When a call comes in to the connected mobile phone, you will hear an incoming call alert on the headphones.

1. Press the FORWARD button to answer the incoming call.
2. Press the FORWARD button again to end the call.
3. The reject the incoming call, press and hold the BACK button.
4. To transfer the sound between the headphones and the mobile phone, press and hold the PLAY/PAUSE button during the call.

Using the AUX IN Jack

1. Insert one end of the audio cable into the LINE OUT or headphone jack on your external audio device.
2. Connect the other end of the cable to the AUX IN 3.5 mm stereo jack on the headphones.

NOTE: If the headphones are in ON mode, the headphones will automatically turn off once the audio cable is plugged in and will work as normal, wired headphones.

3. Begin playback on the external device. The external device's sound output will be heard through the headphones.
4. To adjust volume, use the volume control on the external audio device.
5. When done, stop playback on the external device and disconnect the audio cable from the AUX IN jack on the headphones.

☒ **To prevent possible hearing damage, do not listen at high volume for long periods.**

Troubleshooting

No power	•Power is not on; Long press to turn ON the unit. •Make sure the battery is charged.
The Bluetooth device cannot pair or connect with the headphones.	•You have not activated the Bluetooth function on your device. Refer to your device's user manual to activate the Bluetooth function. •The unit is already paired with another Bluetooth device; disconnect that device and then try again.

⚠ IMPORTANT SAFETY INFORMATION

6. Read these instructions.
7. Keep these instructions.
8. Heed all warnings.
9. Follow all instructions.
10. Do not use this apparatus near water.
11. Clean only with dry cloth.
12. Do not throw this product in the fire, to avoid explosion.
13. Do not expose this product to bright sunshine for a long time.
14. Do not disassemble or modify this product.
15. Please store this product in a clean and dry environment.

WARNING! To prevent possible hearing damage, do not listen at high volume levels for long periods.

Specification

Max. output voltage	≤ 150 mV wide band
Characteristic voltage	≥ 75 mV
Rechargeable battery	
Battery type	3.7 V 185 mAh lithium-polymer battery
Charging power	DC 5 V 300 mA
Operating time	> 10 hours at 60% volume when fully charged
Charging time	Appr. 3 - 4 hours
Bluetooth	
Version	Version 5.0
Operating frequency	2.4 to 2.48 GHz
RF output power	0 dBm
Working distance	Up to 10 m measured in open space (wall and structures may affect range of device)

FEDERAL COMMUNICATIONS COMMISSION COMPLIANCE INFORMATION

SUPPLIER'S DECLARATION OF CONFORMITY (SDoC)

Behringer
HC 2000B

Responsible Party Name:	**Music Tribe Commercial NV Inc.**
Address:	**5270 Procyon Street Las Vegas, NV 89118 USA**
Phone Number:	**+1 702 800 8290**
FCC-ID:	**QWH-MTHP**

HC 2000B

This equipment has been tested and found to comply with the limits for a ClassB digital device, pursuant to part 15 of the FCC Rules. These limits are designed to provide reasonable protection against harmful interference in a residential installation. This equipment generates, uses and can radiate radio frequency energy and, if not installed and used in accordance with the instructions, may cause harmful interference to radio communications. However, there is no guarantee that interference will not occur in a particular installation. If this equipment does cause harmful interference to radio or television reception, which can be determined by turning the equipment off and on, the user is encouraged to try to correct the interference by one or more of the following measures:

- Reorient or relocate the receiving antenna.
- Increase the separation between the equipment and receiver.
- Connect the equipment into an outlet on a circuit different from that to which the receiver is connected.
- Consult the dealer or an experienced radio/TV technician for help.

Changes or modifications not expressly approved by the party responsible for compliance could void the user's authority to operate the equipment.

This equipment complies with Part 15 of the FCC Rules. Operation is subject to the following two conditions:

(1) This device may not cause harmful interference, and
(2) This device must accept any interference received, including interference that may cause undesired operation.

Caution!

The Music Tribe is not responsible for any radio or TV interference caused by unauthorized modifications to this equipment.

Such modifications could void the user authority to operate the equipment FCC RF Radiation Exposure Statement.

FCC RF Radiation Exposure Statement:

(1) This Transmitter must not be co-located or operating in conjuction with any other antenna or transmitter.
(2) This equipment complies with FCC RF radiation exposure limits set forth for an uncontrolled environment.

LEGAL DISCLAIMER

Music Tribe accepts no liability for any loss which may be suffered by any person who relies either wholly or in part upon any description, photograph, or statement contained herein. Technical specifications, appearances and other information are subject to change without notice. All trademarks are the property of their respective owners. Midas, KlarkTeknik, Lab Gruppen, Lake, Tannoy, Turbosound, TC Electronic, TC Helicon, Behringer, Bugera, Auratone and Coolaudio are trademarks or registered trademarks of Music Tribe Global Brands Ltd. © Music Tribe Global Brands Ltd. 2019 All rights reserved.

LIMITED WARRANTY

For the applicable warranty terms and conditions and additional information regarding Music Tribe's Limited Warranty, please see complete details online at musictribe.com/warranty.